# DESPIECE TECNICO

MAYO 1992

# Lavavajillas

# Lavevaisselles

# Dishwashers

MODELO: FI-240

Hostelería y Lavandería Industrial
Grandes Cuisines et Buanderie
Catering and Laundry Equipment

Fagor Industrial, S. Coop. - Oñati

FAGOR




# Lavavasos cestillo redondo
# Glass-washing machines with round baskets

FI-12 S/FI-12 D
FI-18 S/FI-18 D
FI-22

FAGOR

**Excelentes resultados**
El lavado y el aclarado se efectúan mediante difusores superiores e inferiores fijos. Las proyecciones de agua y los perfectos ángulos de incidencia de las toberas garantizan una calidad de lavado excepcional.
Para una utilización correcta de estas máquinas, se aconseja alimentar con agua descalcificada.

**Excellent results**
Washing and rinsing is carried out by fixed jets in the upper and lower parts of the machine.
The pressure of water from the pump and the optimum angle of incidence of the nozzles ensures an exceptional standard of washing.

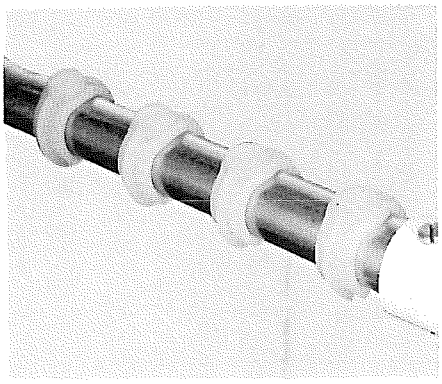

Toberas de lavado.
Washing nozzles.

**Mayor higiene**
Las temperaturas que se alcanzan en los procesos de lavado y aclarado garantizan una completa desinfección térmica.

**Better hygiene**
The temperatures attained in the washing and rinsing processes assure a complete thermal disinfection.

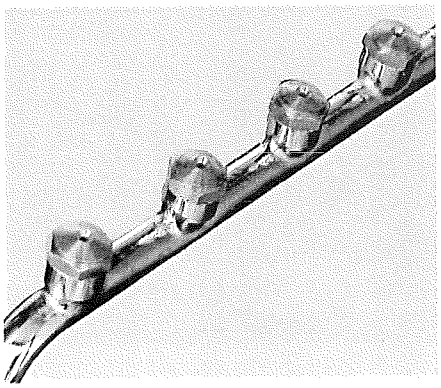

Toberas de aclarado.
Rinsing nozzles.

**Facilidad de acceso**
Todos los elementos de la máquina son fácilmente accesibles, desde el portamandos (extraíble) a los demás elementos funcionales.

**Easy access**
All components, from the extractable control panel down to the pump and elements, are easily accessible.

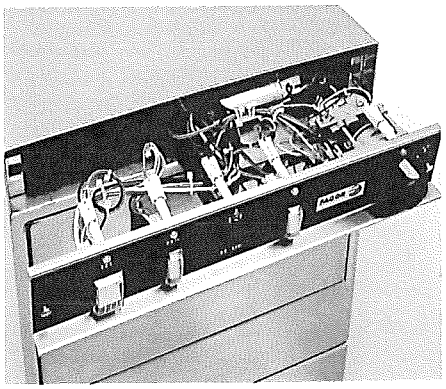

Portamandos extraíble.
Minable control panel.

**Mínimo espacio**
Los lavavasos FAGOR se pueden colocar en cualquier lugar, debido a que se requiere muy poco espacio, desde 0,18 m² de superficie y alturas desde 650 mm en adelante.

**Minimum space**
FAGOR glass-washing machines are very compact (from 0.18 sq. m up to 0.36 sq. m. and heights from 650 mm,) and can therefore be set up in the smallest of spaces.

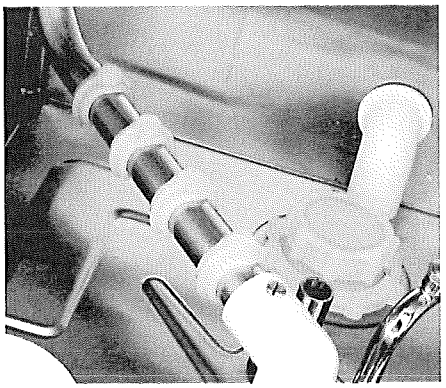

Amplia cuba de lavado.
Detail of washing tank.

Cuadro de mandos.
Ease of operation.

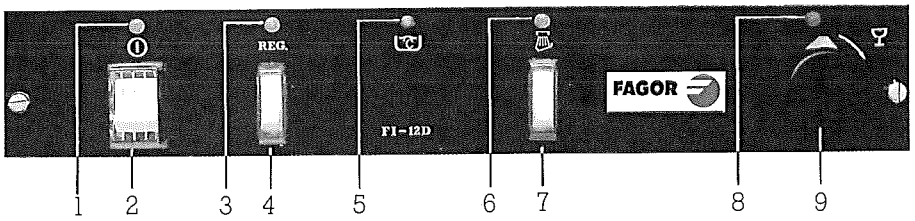


1. Piloto funcionamiento general.
   "In operation" indicator lamp.
2. Interruptor general.
   Main switch.
3. Piloto de regeneración.
   Regeneration indicator lamp.
4. Interruptor de regeneración.
   Regeneration switch.
5. Piloto de calentamiento.
   Heating indicator lamp.
6. Piloto de aclarado en frío.
   Cold rinse indicator lamp.
7. Interruptor de aclarado en frío.
   Cold rinse switch.
8. Piloto de inicio del ciclo de lavado.
   Indicator lamp for start of washing cycle.
9. Mando programador.
   Programming knob.



Cestillo para vasos, tazas y cubilotes para cubiertos.
Basket with cutlery containers.



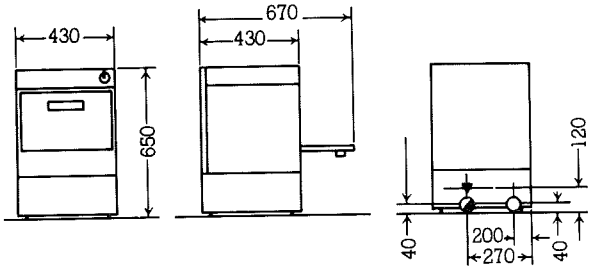


| | | | |
|---|---|---|---|
| AGUA FRIA | O | 3/4" | COLD WATER |
| ELECTRICIDAD | ▼ | 220 V. | ELECTRICITY (240 V U.K.) |
| DESAGÜE | ◪ | 2" | DRAIN |

**FI-12 S y FI-12 D**
Producción: 1.200 Piezas/hora
Posibilidad de lavar platos hasta 190 mm. de Ø.
El modelo FI-12 D, tiene incorporado el descalcificador de agua dura y su regeneración se efectúa automáticamente.
Dos programas de aclarado, con agua caliente o agua fría.
Programa de lavado automático, regulable de 0 a 120 segundos.
Resistencia para el calentamiento del agua de lavado.
Sobrecalentador para el calentamiento del agua de aclarado.
Dosificador de producto de secado.

**Dotación**
2 cestillos de Ø 355 mm. para vasos y tazas.
1 colocación para platos de Ø 190 mm.

**FI-12 S and FI-12 D**
Producción: 1200 parts per hour.
Possiblity of washing plates of diameters of up to 190 mm.
Model FI-12 D is equipped with a built-in water softener for hard water and regeneration is carried out automatically.
Automatic operation.
Water level in the wash tank is controlled by a pressurestat.
Thermostatic temperature regulation.
Choice of rinsing programmes with hot or cold water, according to requirements.
Automatic Washing programme, adjustable from 0 to 120 seconds.
Built-in elements for the heating of water for the washing cycle.
Built-in stainless steel superheater for the heating of water for the rinsing cycle.
Built-in rinse-aid doser can be regulated from the front face of the machine.
Adjustable feet for correct levelling of machine.
Protection against overheating.

**Equipment supplierd**
2 baskets of 355 mm diameter for glasses and cups.
1 rack for plates o a diameter up to 190 mm.
1 container for cutlery.

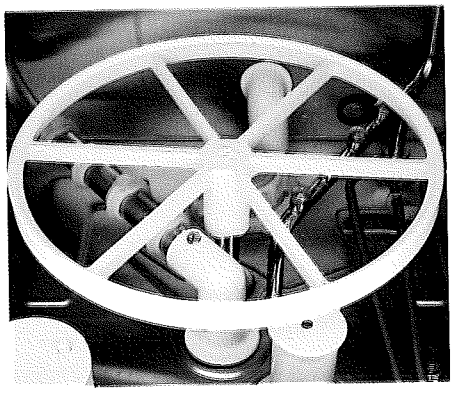

Plato de lavado giratorio.
Rotation plate.

**Inyectores de precisión**
Los inyectores y difusores de lavado son de una gran precisión y resisten perfectamente el calor y los productos químicos de limpieza.

**Precision injectors**
The high precision injectors and jets for the washing process are made of heat-resistant Nylon and therefore offer high resistance to heat and chemical products.

| Características • Specifications | | | Modelos • Model | | |
|---|---|---|---|---|---|
| | | | **FI-12 S<br>FI-12 D** | **FI-18 S<br>FI-18 D** | **FI-22** |
| Capacidad de lavado<br>Washing capacity | Piezas/hora • Parts/hour | | 1200 | 1800 | 2400 |
| | Platos/hora Ø • Plates/hour Ø | 190 (mm) | 300 | 360 | 420 |
| | | 240 (mm) | | 210 | 330 |
| | | 270 (mm) | | | 240 |
| Presión agua de alimentación • Feed water pressure | | Máximo • Maximum | 4 Kg/cm² | 4 Kg/cm² | 4 Kg/cm² |
| | | Mínimo • Minimum | 2 Kg/cm² | 2 Kg/cm² | 2 Kg/cm² |
| Temperatura agua de alimentación • Feed water temperature | | | 15º C | 15º C | 15º C |
| Descalcificador • Water softener | | | FI-12 D | FI-18 D | |
| Temperatura lavado • Washing temperature | | | 55º - 60º C | 55º - 60º C | 55º - 60º C |
| Temperatura aclarado • Rinsing temperature | | | 85º C | 85º C | 85º C |
| Tensión alimentación • Feed voltage | | | 220 V-50 Hz<br>240 V-50 Hz | 220 V-50 Hz<br>240 V-50 Hz | 220 V-50 Hz<br>240 V-50 Hz |
| Potencia (kw)<br>Power (kw) | Calderín aclarado • Rinse boiler | | 2,4 | 2,8 | 2,8 |
| | Motobomba lavado • Wash pump | | 0,575 | 0,575 | 0,575 |
| | Cuba de lavado • Wash tank | | 2 | 2 | 2 |
| Potencia máxima en funcionamiento (kw) • Maximum power during operation (kw) | | | 2,975 | 3,375 | 3,375 |
| Lavado<br>Washing | Nº toberas superiores • Nr. of upper nozzles | | 4 | 5 | 6 |
| | Nº toberas inferiores • Nr. of lower nozzles | | 5 | 7 | 8 |
| | Duración (seg) • Duration (sec) | | 0 ÷ 120 | 0 ÷ 120 | 0 ÷ 240 |
| | Capacidad cuba (lit) • Wash tank capacity (lit) | | 11 | 15 | 19 |
| Aclarado<br>Rinsing | Nº toberas superiores • Nr. of upper nozzles | | 4 | 4 | 5 |
| | Nº toberas inferiores • Nr. of lower nozzles | | 4 | 5 | 5 |
| | Duración (seg) • Duration (sec) | | 15" | 15" | 15" |
| | Consumo (lit) a 2 Kg/cm² • Consumption (lit) at 2 kg/sq.cm. | | 1,6 | 1,8 | 2 |
| Dimensiones (mm)<br>Dimensions (mm) | Exteriores • Outer | Alto • Height | 650 | 700 | 740 |
| | | Ancho • Width | 430 | 480 | 540 |
| | | Profundo • Depth | 430 | 480 | 550 |
| | Cestillos • Baskets | Ø | 355 | 405 | 465 |
| | | Alto • Height | 130 | 150 | 150 |
| Peso (kg)<br>Weight (kg) | Neto • Net | | FI-12 S - 33<br>FI-12 D - 37 | FI-18 S - 40<br>FI-18 D - 43 | 46 |
| | Bruto • Gross | | FI-12 S - 40<br>FI-12 D - 44 | FI-18 S - 47<br>FI-18 D - 51 | 56 |

FAGOR/LVC R-I/XXXII/10-98/Elkar, S. Coop.

**Fagor Industrial, S. Coop.**
Apdo. 17
20.560 OÑATE (Guipúzcoa). ESPAÑA
Tel. intern. (34) 43. 78 01 51-78 09 90
Tx. 38697 FAGI E
Fagor Industrial en un integrante del Grupo FAGOR

FAGOR

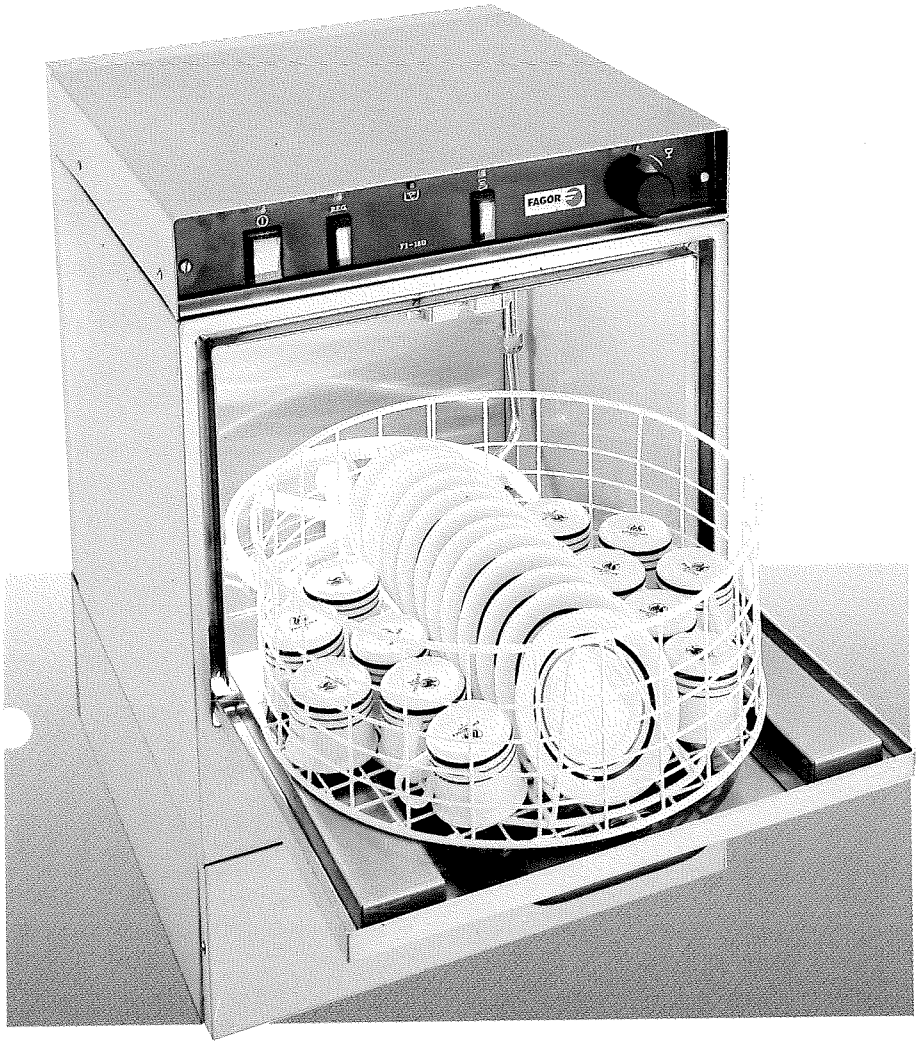


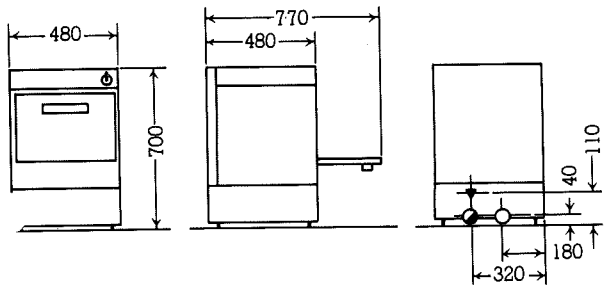


| | | | |
|---|---|---|---|
| AGUA FRIA | ○ | 3/4" | COLD WATER |
| ELECTRICIDAD | ▼ | 220 V. | ELECTRICITY (240 V U.K.) |
| DESAGÜE | ◐ | 2" | DRAIN |

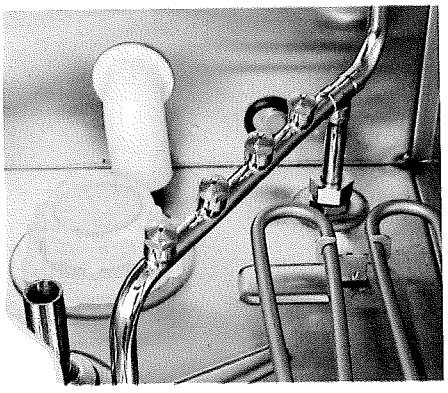

Resistencia para calentamiento cuba de lavado.
Tank heating element.

**FI-18 S y FI-18 D**
Producción: 1.800 piezas/hora.
Posibilidad de lavar platos hasta 240 mm. de Ø.
El modelo FI-18 D, tiene incorporado el descalcificador de agua dura y su regeneración se efectúa automáticamente.
Dos programas de aclarado, con agua caliente o agua fría.
Programa de lavado automático, regulable de 0 a 120 segundos.
Resistencia para el calentamiento del agua de lavado.
Sobrecalentador para el calentamiento del agua de aclarado.
Dosificador de producto de secado.

**Dotación**
2 cestillos de Ø 395 mm. para vasos y tazas.
1 colocación para platos de Ø 190 mm.
1 colocación para platos de Ø 240 mm.
1 Cubilete para cubiertos.

**FI-18 S and FI-18 D**
Production: 1800 parts per hour.
Possibility of washing plates of diameters of up to 240 mm.
Model FI-18 D is equipped with a built-in water softener for hard water and regeneration is carried out automatically.
Automatic operation.
Water level in the wash tank is controlled by a pressurestat.
Thermostatic temperature regulation.
Choice of rinsing programmes with hot or cold water, according to requirements.
Automatic Washing programme, adjustable from 0 to 120 seconds.
Built-in elements for the heating of water for the washing cycle.
Built-in stainless steel superheater for the heating of water for the rinsing cycle.
Built-in rinse-aid doser can be regulated from the front face of the machine.
Adjustable feet for correct levelling of machine.
Protection against overheating.

**Equipment supplied**
2 baskets of a diameter of 395 mm for glasses and cups.
1 rack for plates of a diameter up to 190 mm.
1 rack for plates of a diameter up to 240 mm.
1 container for cutlery.

**Fácil limpieza**
Para facilitar la limpieza de la máquina puede desmontarse la puerta del lavavasos, el plato giratorio, las toberas de lavado y aclarado, los filtros y el rebosadero.

**Easy to clean**
The machine door, rotating plate, washing and rinsing nozzles, filters and the overflow device can be easily removed to facilitate the cleaning of the machine.



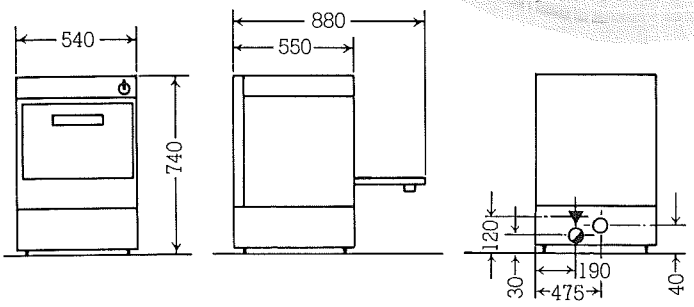


AGUA FRIA ○ 3/4" COLD WATER
ELECTRICIDAD ▼ 220 V. ELECTRICITY (240 V U.K.)
DESAGÜE ◑ 2" DRAIN

**FI-22**
Producción: 2.400 piezas/hora, o 240 platos/hora de 270 mm. de Ø.
Dos programas de aclarado, con agua caliente o agua fría, según el tipo de vasos.
Programa de lavado automático, regulable de 0 a 240 segundos.
Resistencia para el calentamiento del agua de lavado.
Sobrecalentador para el calentamiento del agua de aclarado.
Dosificador de producto de secado.

**Dotación**
1 cestillo de Ø 465 mm. para vasos y tazas.
1 cestillo para platos de hasta 270 mm. de Ø.
1 cubilete para cubiertos.

**FI-22**
Production: 2400 parts per hour.
Possibility of washing plates of diameters of up to 270 mm.
Water level in the wash tank is controlled by a pressurestat.
Thermostatic temperature regulatior
Different rinsing programmes, with hot or cold water, according to requirements.
Automatic washing programme, adjustable from 0 to 240 seconds.
Built-in elements for the heating of water for the washing cycle.
Built-in stainless steel superheater for the heating of water for the rinsing cycle.
Built-in rinse-aid doser can be regulated from the front face of the machine.
Adjustable feet for correct levelling of machine.
Protection against overheating.

**Equipment supplied**
1 basket of a diameter of 465 mm for glasses and cups.
1 basket for plates of a diameters up to 270 mm.
1 container for cutlery.

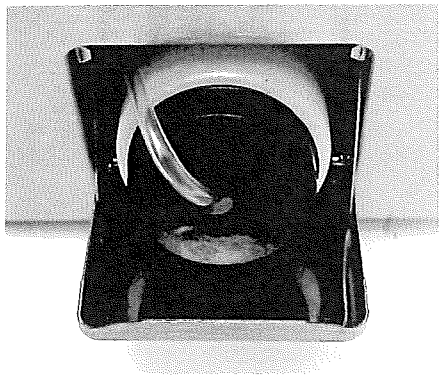

Depósito líquido abrillantador.
Rinse aid deposit.

**Dosificador de producto de aclarado.**
Este modelo tiene incorporado de origen un depósito de reserva de producto de aclarado con visualizador de nivel.
Todos los modelos disponen de dosificador de producto de aclarado, regulable en función de los diversos tipos de agua.

**Rinse aid doser**
This model is equipped with a rinse aid container with a visual level indicator.
All models are equipped with rinse aid dosers which can be regulated for different types of water.
The use of softened water is recommended to obtain optimum results from these machines.

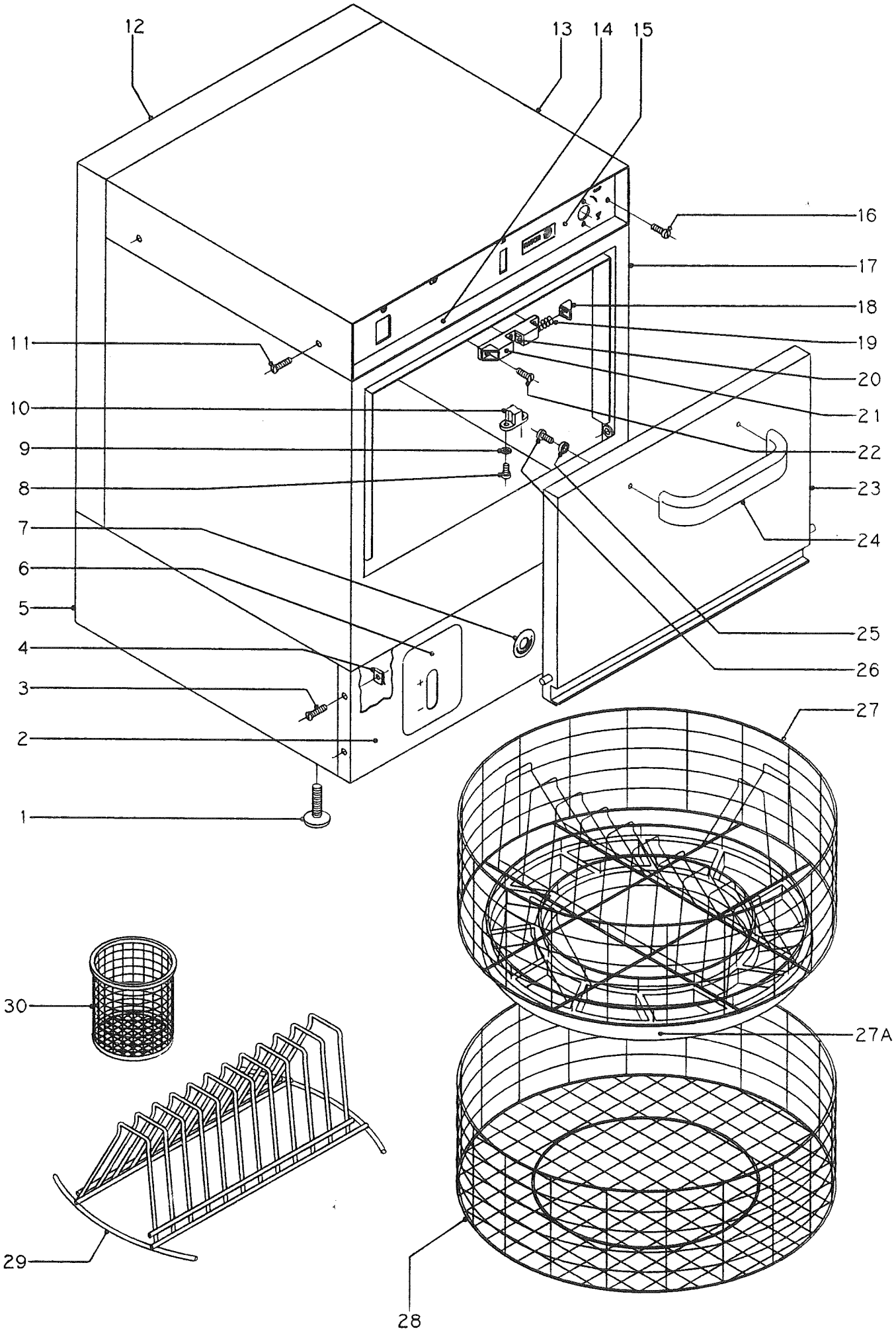


| N plano | Firma | Fecha | Aparato | Lamina | |
|---|---|---|---|---|---|
| B-498 | | IV-92 | LAVAVAJILLAS FI-240 | 1 | Fagor Industrial S.Coop. FAGOR Oñate |

| N. | CODIGO | CONCEPTO : DESPIECE MUEBLE EXTERIOR<br>SUJET : MEUBLE EXTERIEUR<br>CONCEPT : EXTERNAL CABINET | | | LAMINA N.<br>VUE N. 1<br>ILUSTR. N. | HOJA N.<br>PAGE N. 1<br>PAGE N. | PLANO N.<br>PLAN N B-498<br>DRAWING N. | | | | 2.<br>OBSERVACIONES |
|---|---|---|---|---|---|---|---|---|---|---|---|
| | | APARATO - APPAREIL - APPLIANCE : LAVAVAJILLAS - LAVEVAISSELLES - DISH WASHING MACHINE | | | MODELO Y CANTIDAD - MOD. ET QUANT. - MOD. & QUANT. | | | | | | |
| | | DENOMINACION | DENOMINATION | DESCRIPTION | FI-240 | | | | | | |
| 1 | Z-700151 | Pata regulable | Pied réglable | Adjustable foot | 4 | | | | | | |
| 2 | Z-642901 | Panel frontal | Panneau avant | Front panel | 1 | | | | | | |
| 3 | Q-072033 | Tornillo g.s. M.5x20 | Vis g.s. M.5x20 | G.s. screw M.5x20 | 4 | | | | | | |
| 4 | Q-221012 | Tuerca rápida M.5 | Ecrou rapide M.5 | Quick-acting nut M.5 | 4 | | | | | | |
| 5 | Z-640101 | Armazón completo | Armature complète | Complete chassis | 1 | | | | | | |
| 6 | Z-642902 | Puerta duquesa completa | Porte accès réservoir tensioac. | Door for access to tensioact. | 1 | | | | | | |
| | N-020655 | Resorte tensor | Ressort tendeur | Tension spring | 1 | | | | | | |
| | Z-642907 | Eje | Axe | Sheave pin | 2 | | | | | | |
| | Q-372001 | Pasador de aletas | Goupille fendue | Cotter pin | 4 | | | | | | |
| 7 | Z-652917 | Indicador regulación tensoact. | Indicateur regul.tensioactif | Tensioact. regulator indic. | 1 | | | | | | |
| 8 | Q-153111 | Tornillo cilíndrico M.4x8 | Vis cylindrique M.4x8 | Cylindrical screw M.4x8 | 2 | | | | | | |
| 9 | Q-242020 | Arandela abanico A.4 | Rondelle éventail A.4 | Fan-shaped washer A.4 | 2 | | | | | | |
| 10 | Z-850605 | Complemento cierre | Complément fermeture | Lock accessory | 1 | | | | | | |
| 11 | Q-072033 | Tornillo g.s. M.5x20 | Vis g.s. M.5x20 | G.s. screw M.5x20 | 4 | | | | | | |
| | Q-221012 | Tuerca rápida M.5 | Ecrou rapide M.5 | Quick-acting nut M.5 | 4 | | | | | | |
| 12 | Z-642909 | Cubierta posterior | Enveloppe postérieure | Rear casing | 1 | | | | | | |
| 13 | Z-642913 | Tapa | Couvercle | Cover | 1 | | | | | | |
| 14 | Z-642941 | Frente | Devant | Front | 1 | | | | | | |
| 15 | Z-642921 | Embellecedor adhesivo | Garniture adhésive | Adhesive adornment | 1 | | | | | | |
| 16 | Q-062031 | Tornillo alomado M.5x10 | Vis à tête bombée M.5x10 | Roundhead screw M.5x10 | 2 | | | | | | |
| 17 | Z-640301 | Caja soldada | Boîte soudée | Welded casing | 1 | | | | | | |
| 18 | Z-850602 | Tapa cierre puerta | Couvercle fermeture porte | Door catch cap | 2 | | | | | | |
| 19 | Z-850604 | Resorte cierre puerta | Ressort fermeture porte | Door catch spring | 2 | | | | | | |
| 20 | Z-850603 | Pitón cierre puerta | Piton fermeture porte | Door catch pin | 2 | | | | | | |
| 21 | Z-850601 | Cuerpo cierre puerta | Corps fermeture porte | Door catch body | 1 | | | | | | |
| 22 | Q-042022 | Tornillo avellanado M.4x15 | Vis à tête fraisée M.4x15 | Countersunk screw M.4x15 | 3 | | | | | | |
| | Q-242020 | Arandela abanico A.4 | Rondelle en éventail A.4 | Fan-shaped washer A.4 | 3 | | | | | | |
| | Q-162020 | Tuerca exagonal M.4 | Ecrou à six pans M.4 | Hexagonal nut M.4 | 3 | | | | | | |
| | Z-600321 | Escuadra cierre puerta | Equerre fermeture porte | Door catch brace | 1 | | | | | | |
| | Q-042031 | Tornillo avellanado M.5x10 | Vis à tête fraisée M.5x10 | Countersunk screw M.5x10 | 2 | | | | | | |
| | Q-242030 | Arandela abanico A.5 | Rondelle éventail A.5 | Fan-shaped washer A.5 | 2 | | | | | | |

| N. | CODIGO | CONCEPTO : DESPIECE MUEBLE EXTERIOR<br>SUJET : MEUBLE EXTERIEUR<br>CONCEPT : EXTERNAL CABINET | | | LAMINA N.<br>VUE N. 1<br>ILUSTR. N. | HOJA N.<br>PAGE N. 2<br>PAGE N. | PLANO N.<br>PLAN N B-498<br>DRAWING N. | | | | 3.<br>OBSERVACIONES |
|---|---|---|---|---|---|---|---|---|---|---|---|
| | | APARATO - APPAREIL - APPLIANCE : LAVAVAJILLAS - LAVEVAISSELLES - DISH WASHING MACHINE | | | MODELO Y CANTIDAD - MOD. ET QUANT. - MOD. & QUANT. | | | | | | |
| | | DENOMINACION | DENOMINATION | DESCRIPTION | FI-240 | | | | | | |
| | Q-162030 | Tuerca exagonal M.5 | Ecrou à six pans M.5 | Hexagonal nut M.5 | 2 | | | | | | |
| 23 | Z-640531 | Puerta soldada | Porte soudée | Welded door | 1 | | | | | | |
| 24 | Z-850522 | Asa puerta | Poignée porte | Door handle | 1 | | | | | | |
| 25 | Q-308002 | Arandela dubo A.6 | Rondelle dubo A.6 | Dubo washer A.6 | 2 | | | | | | |
| 26 | Q-062041 | Tornillo alomado M.6x10 | Vis à tête bombée M.6x10 | Roundhead screw M.6x10 | 2 | | | | | | |
| 27 | Z-645310 | Cestillo platos | Panier assiettes | Basket for plates | 1 | | | | | | |
| 27A | Z-645306 | Base cestillo platos | Base panier assiettes | Base for basket | 1 | | | | | | |
| 28 | Z-645307 | Cestillo base | Panier base | Base basket | 1 | | | | | | |
| 29 | Z-625302 | Suplemento platillos (12 u.) | Supplément soucoupes (12 u.) | Supplement for plates (12 u.) | 1 | | | | | | |
| 30 | Z-605303 | Cestillo cubiertos | Panier à couverts | Basket for cutlery | 1 | | | | | | |

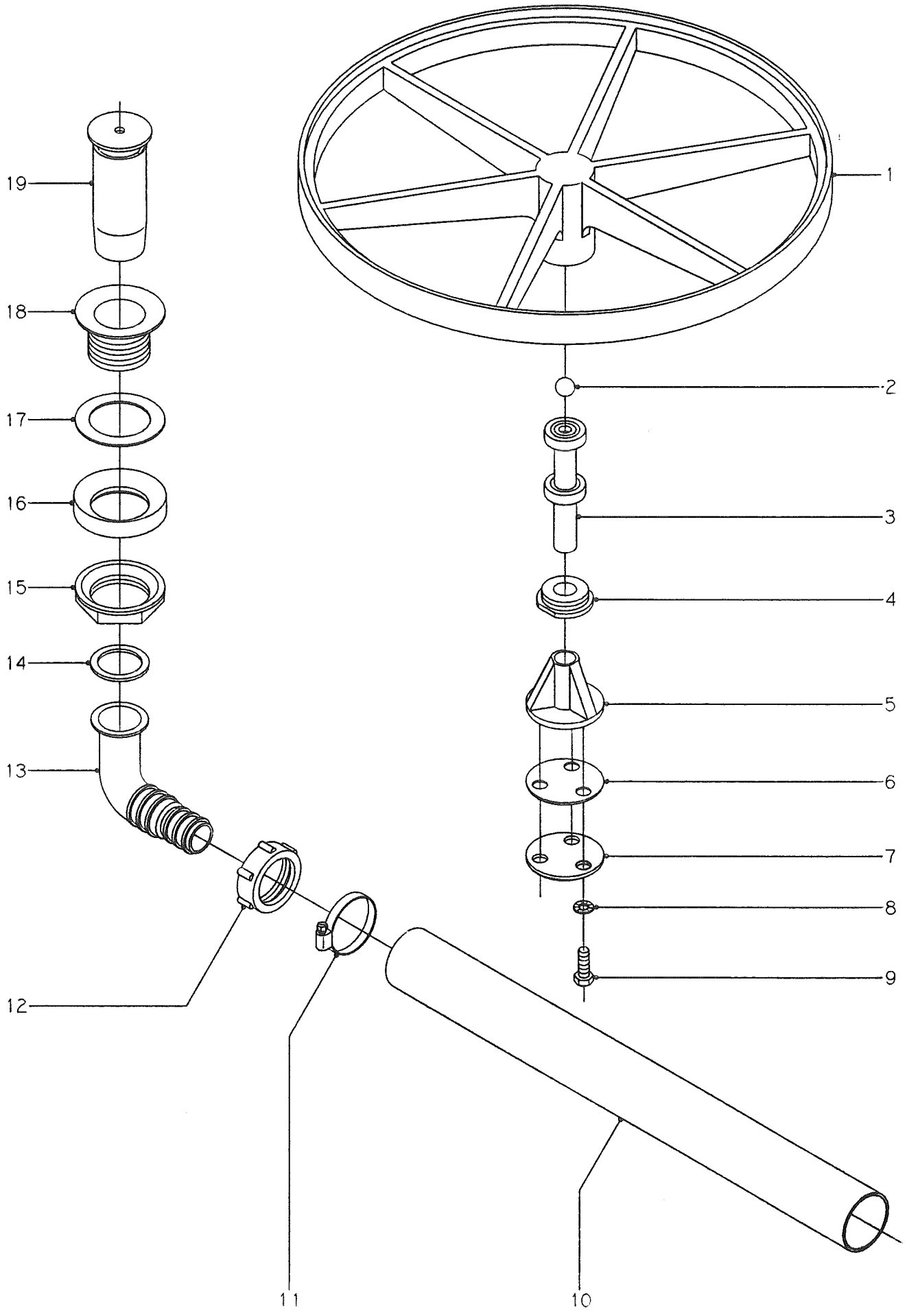


| N plano | Firma | Fecha | Aparato | Lamina | |
|---|---|---|---|---|---|
| B-499 | | IV-92 | LAVAVAJILLAS FI-240 | 2 | Fagor Industrial S.Coop. FAGOR<br>Oñate |

CONCEPTO : DESPIECE PARTE FUNCIONAL DESAGÜE Y SISTEMA GIRO CESTILLOS
SUJET : CIRCUIT DE VIDANGE ET SYSTEME D'APPUI DU PANIER
CONCEPT : DRAIN SYSTEM AND BASKET ENSEMBLE

LAMINA N. / VUE N. 2 / ILUSTR. N. | HOJA N. / PAGE N. 1 / PAGE N. | PLANO N. / PLAN N B-499 / DRAWING N.

5.

APARATO - APPAREIL - APPLIANCE : LAVAVAJILLAS - LAVEVAISSELLES - DISH WASHING MACHINE

MODELO Y CANTIDAD - MOD. ET QUANT. - MOD. & QUANT.

| N. | CODIGO | DENOMINACION | DENOMINATION | DESCRIPTION | FI-240 | | | | | | OBSERVACIONES |
|---|---|---|---|---|---|---|---|---|---|---|---|
| 1 | Z-645920 | Plato giro | Plateau rotation | Rotating plate | 1 | | | | | | |
| 2 | Z-600604 | Bola Ø 10 | Bille Ø 10 | Ball Ø 10 | 1 | | | | | | |
| 3 | Z-645909 | Conjunto eje rodamientos | Ensemble axe roulements | Bearings spindle assembly | 1 | | | | | | |
| 4 | Z-645906 | Tapón plato | Bouchon plateau | Plate plug | 1 | | | | | | |
| 5 | Z-645902 | Soporte eje | Support axe | Spindle support | 1 | | | | | | |
| 6 | Z-645907 | Junta | Joint | Joint | 1 | | | | | | |
| 7 | Z-645910 | Arandela refuerzo | Rondelle de renfort | Reinforcing washer | 1 | | | | | | |
| 8 | Q-242040 | Arandela abanico A.6 | Rondelle éventail | Fan-shaped washer | 3 | | | | | | |
| 9 | Q-011141 | Tornillo exagonal M.6x10 | Vis à six pans M.6x10 | Hexagonal screw M.6x10 | 3 | | | | | | |
| 10 | Z-602111 | Manguera desagüe 37,8x30x700 | Tuyau d'évacuation 37,8x30x700 | Drainage tube 37,8x30x700 | 1 | | | | | | |
| 11 | Q-881306 | Abrazadera 32-50 | Collier 32-50 | Clamp 32-50 | 1 | | | | | | |
| 12 | Z-602102 | Tuerca amarre codo | Ecrou ancrage coude | Elbow fastening nut | 1 | | | | | | |
| 13 | Z-602101 | Codo desagüe | Coude d'évacuation | Drainage elbow | 1 | | | | | | |
| 14 | Q-307027 | Arandela junta | Rondelle de joint | Joint washer | 1 | | | | | | |
| 15 | Z-702101 | Tuerca amarre válvula 1 1/2" | Ecrou ancrage soupape 1 1/2" | Valve fastening nut 1 1/2" | 1 | | | | | | |
| 16 | Q-307026 | Junta especial | Joint spécial | Special joint | 1 | | | | | | |
| 17 | Q-307009 | Arandela junta Ø70xØ48x1,5 | Rondelle joint Ø70xØ48x1,5 | Joint washer Ø70xØ48x1,5 | 1 | | | | | | |
| 18 | 9722111 | Válvula desagüe | Soupape d'évacuation | Drainage valve | 1 | | | | | | |
| 19 | Z-602104 | Aliviadero | Trop-plein | Spillway tube | 1 | | | | | | |

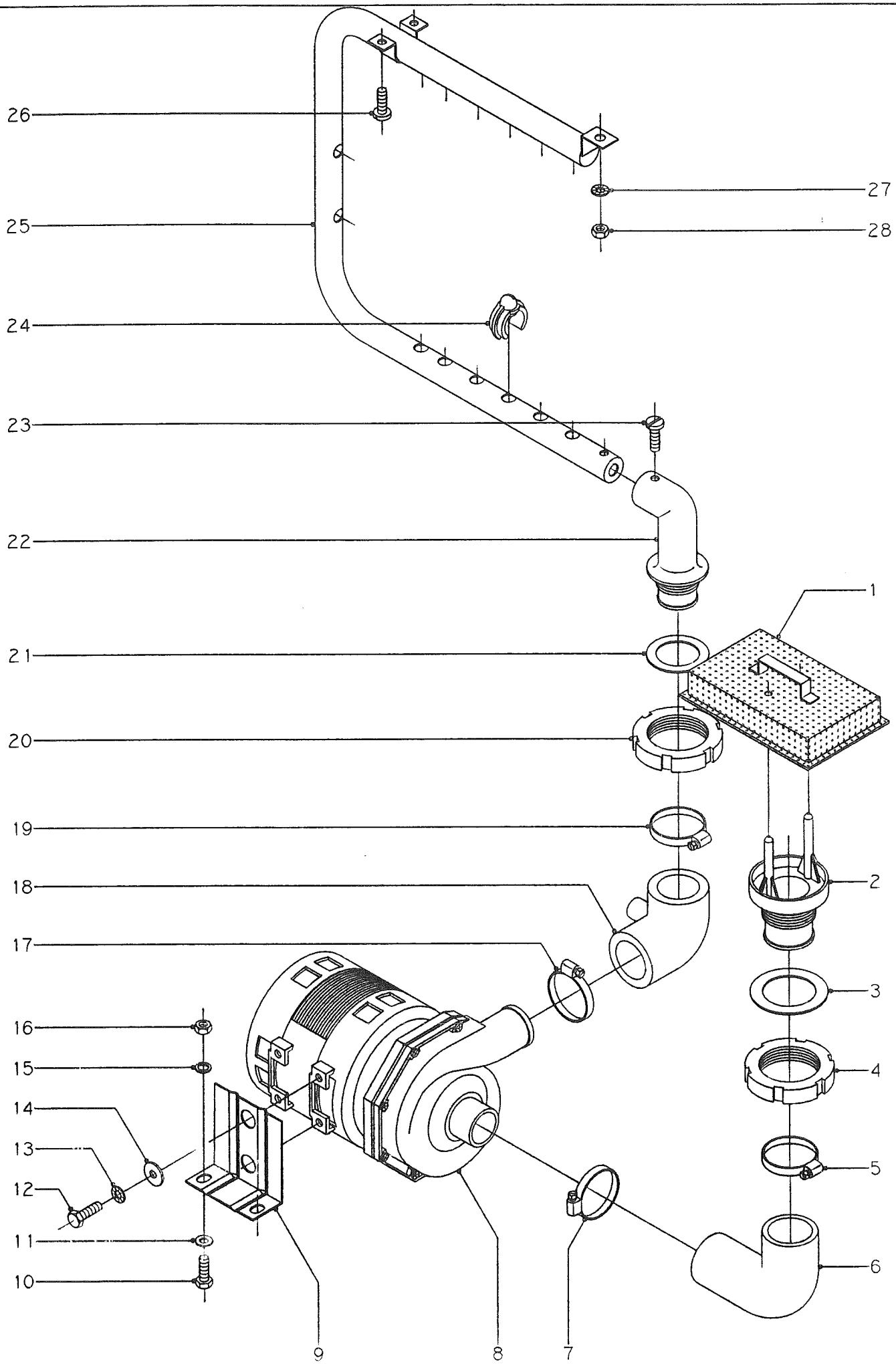


| N plano | Firma | Fecha | Aparato | Lamina | |
|---|---|---|---|---|---|
| B-500 | | IV-92 | LAVAVAJILLAS FI-240 | 3 | Fagor Industrial S.Coop. FAGOR<br>Oñate |

| N. | CODIGO | CONCEPTO : DESPIECE PARTE FUNCIONAL LAVADO<br>SUJET : DEPIECEMENT PARTIE FONCTIONNELLE LAVAGE<br>CONCEPT : DISASSEMBLY OF FUNCTIONAL WASHING PARTS | | | LAMINA N.<br>VUE N. 3<br>ILUSTR. N. | HOJA N.<br>PAGE N. 1<br>PAGE N. | PLANO N.<br>PLAN N B-500<br>DRAWING N. | | | | 7.<br>OBSERVACIONES |
|---|---|---|---|---|---|---|---|---|---|---|---|
| | | APARATO - APPAREIL - APPLIANCE : LAVAVAJILLAS - LAVEVAISSELLES - DISH WASHING MACHINE | | | MODELO Y CANTIDAD - MOD. ET QUANT. - MOD. & QUANT. | | | | | | |
| | | DENOMINACION | DENOMINATION | DESCRIPTION | FI-240 | | | | | | |
| 1 | Z-640903 | Filtro de aspiración | Filtre | Filter | 1 | | | | | | |
| 2 | Z-600905 | Pasamuros aspiración | Traversée aspiration | Feedthrough suction part | 1 | | | | | | |
| 3 | Q-307009 | Arandela junta Ø70xØ48x1,5 | Rondelle joint Ø70xØ48x1,5 | Joint washer Ø70xØ48x1,5 | 1 | | | | | | |
| 4 | Q-228005 | Tuerca ranurada M.49x2,5 | Ecrou fendu M.49x2,5 | Grooved nut M.49x2,5 | 1 | | | | | | |
| 5 | Q-881307 | Abrazadera 40-60 | Collier 40-60 | Clap 40-60 | 1 | | | | | | |
| 6 | Z-640902 | Codo aspiración | Coude aspiration | Suction elbow | 1 | | | | | | |
| 7 | Q-881307 | Abrazadera 40-60 | Collier 40-60 | Clap 40-60 | 1 | | | | | | |
| 8 | Z-641001 | Bomba de lavado | Pompe de lavage | Washing pump | 1 | | | | | | |
| s/n | V-1138 | Conjunto junta y retén | Joint et retaineur | Retainer and joint | 1 | | | | | | |
| s/n | V-1492 | Turbina | Turbine | Turbine | 1 | | | | | | |
| s/n | V-1432 | Junta de tapa | Joint pour couvercle | Cover joint | 1 | | | | | | |
| 9 | Z-641002 | Soporte bomba | Support pompe | Pump support | 1 | | | | | | |
| 10 | Q-011352 | Tornillo exagonal M.8x15 | Vis à six pans M.8x15 | Hexagonal Screw M.8x15 | 2 | | | | | | |
| 11 | Q-231450 | Arandela plana A.8 | Rondelle plate A.8 | Flat washer A.8 | 2 | | | | | | |
| 12 | Q-011141 | Tornillo exagonal M.6x10 | Vis à six pans M.6x10 | Hexagonal screw M.6x10 | 2 | | | | | | |
| 13 | Q-242040 | Arandela abanico A.6 | Rondelle éventail A.6 | Fan-shaped washer A.6 | 2 | | | | | | |
| 14 | Q-301404 | Arandela plana Ø23xØ7x2 | Rondelle plate Ø23xØ7x2 | Flat washer Ø23xØ7x2 | 2 | | | | | | |
| 15 | Q-261050 | Arandela muelle A.8 | Rondelle à ressort A.8 | Spring washer A.8 | 2 | | | | | | |
| 16 | Q-161450 | Tuerca exagonal M.8 | Ecrou à six pans M.8 | Hexagonal nut M.8 | 2 | | | | | | |
| 17 | Q-881307 | Abrazadera 40-60 | Collier 40-60 | Clamp 40-60 | 1 | | | | | | |
| 18 | Z-640911 | Codo impulsión | Coude impulsion | Discharge elbow | 1 | | | | | | |
| 19 | Q-881307 | Abrazadera 40-60 | Collier 40-60 | Clamp 40-60 | 1 | | | | | | |
| 20 | Q-228006 | Tuerca soporte distribuidor | Ecrou sopport distributeur | Distributor support nut | 1 | | | | | | |
| 21 | Q-307011 | Arandela junta Ø56xØ39x1 | Rondelle joint Ø56xØ39x1 | Joint washer Ø56xØ39x1 | 1 | | | | | | |
| 22 | Z-600901 | Pasamuros impulsión | Traversée impulsion | Feedthrough discharge part | 1 | | | | | | |
| 23 | Q-062031 | Tornillo alomado M.5x10 | Vis à tête bombèe M.5x10 | Roundhead screw M.5x10 | 1 | | | | | | |
| 24 | Z-600704 | Tobera lavado inf. y costado | Buse lavage | Washing nozzle | 8 | | | | | | |
| | Z-600705 | Tobera lavado superior | Buse lavage supérieure | Upper washing nozzle | 6 | | | | | | |
| 25 | Z-640701 | Tubería lavado | Tuyauterie lavage | Washing pipe | 1 | | | | | | |
| 26 | Q-153111 | Tornillo cilíndrico M.4x8 | Vis cylindrique M.4x8 | Cylindrical screw M.4x8 | 2 | | | | | | |
| 27 | Q-242040 | Arandela abanico A.6 | Rondelle éventail | Fan-shaped washer | 1 | | | | | | |
| 28 | Q-162040 | Tuerca exagonal M.6 | Ecrou à six pans M.6 | Hexagonal nut M.6 | 1 | | | | | | |

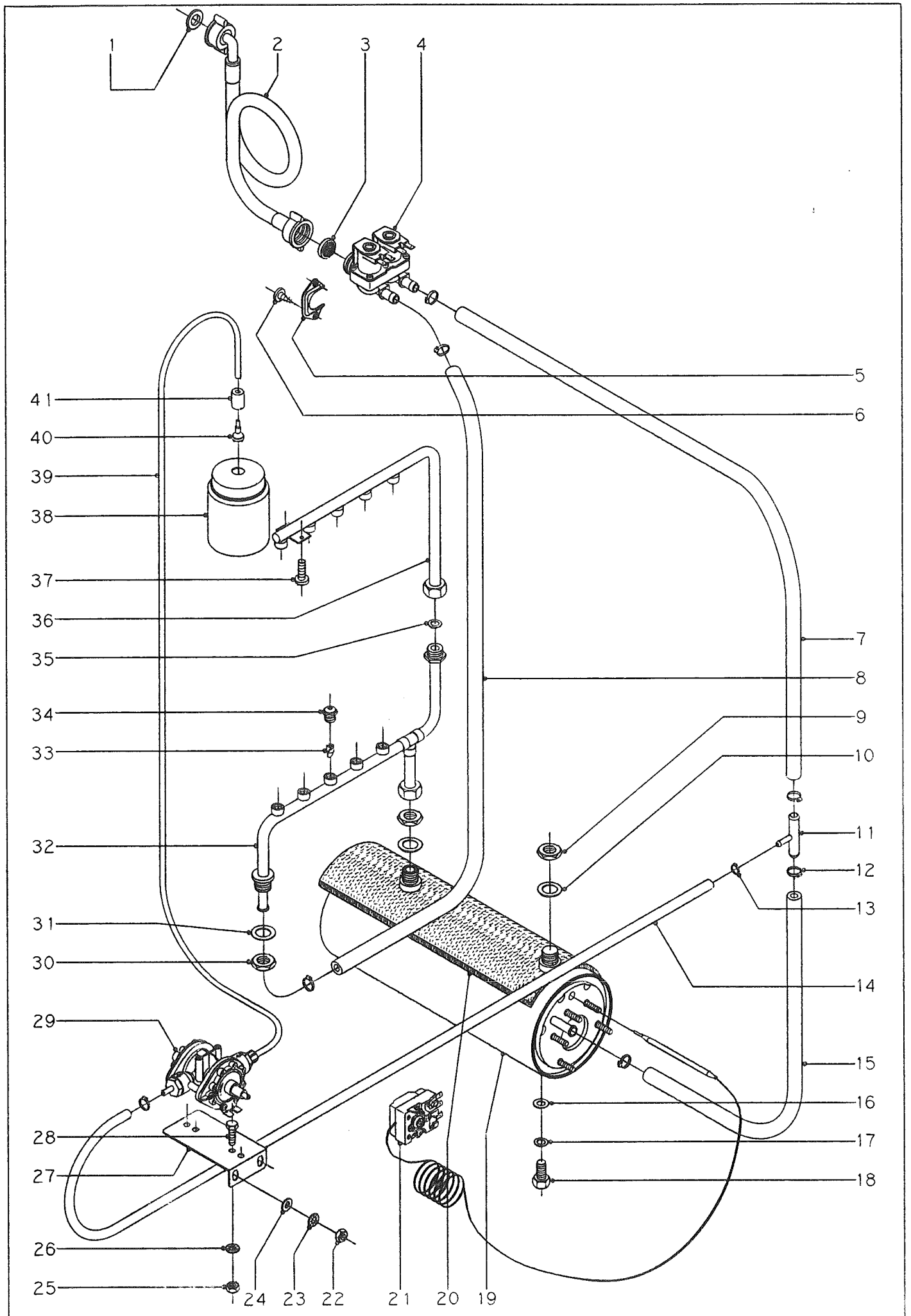


| N plano | Firmo | Fecha | Aparato | Lamina | |
|---|---|---|---|---|---|
| B-501 | | IV-92 | LAVAVAJILLAS FI-240 | 4 | Fagor Industrial S.Coop. FAGOR<br>Oñate |

| N. | CODIGO | CONCEPTO : DESPIECE PARTE FUNCIONAL ACLARADO<br>SUJET : DEPIECEMENT PARTIE FONCTIONNELLE RINÇAGE<br>CONCEPT : DISASSEMBLY OF FUNCTIONAL RINSE PARTS | | | LAMINA N.<br>VUE N. 4<br>ILUSTR. N. | HOJA N.<br>PAGE N. 1<br>PAGE N. | PLANO N.<br>PLAN N B-501<br>DRAWING N. | | | | 9.<br>OBSERVACIONES |
|---|---|---|---|---|---|---|---|---|---|---|---|
| | | APARATO - APPAREIL - APPLIANCE : LAVAVAJILLAS - LAVEVAISSELLES - DISH WASHING MACHINE | | | MODELO Y CANTIDAD - MOD. ET QUANT. - MOD. & QUANT. | | | | | | |
| | | DENOMINACION | DENOMINATION | DESCRIPTION | FI-240 | | | | | | |
| 1 | Q-307031 | Junta tubo entrada agua | Joint tuyau d'amenée eau | Water inlet tube joint | 1 | | | | | | |
| 2 | Z-601114 | Tubo entrada de agua | Tuyau d'amenée eau | Water inlet tube | 1 | | | | | | |
| 3 | Z-701132 | Filtro-junta | Filtre-joint | Foint-filter | 1 | | | | | | |
| 4 | P-255001 | Electroválvula 1E - 2S | Electrovalve | Electric valve | 1 | | | | | | |
| 5 | Z-601161 | Brida soporte electroválvula | Bride support electrovalve | Flange | 1 | | | | | | |
| 6 | Q-152005 | Tornillo alomado 4,2x13 | Vis | Screw | 2 | | | | | | |
| 7 | Z-641121 | Tubo de goma Ø17xØ10x580 | Tuyau caoutchouc Ø17xØ10x580 | Rubber tube Ø17xØ10x580 | 1 | | | | | | |
| 8 | Z-641111 | Tubo de goma Ø17xØ10x560 | Tuyau caoutchouc Ø17xØ10x560 | Rubber tube Ø17xØ10x560 | 1 | | | | | | |
| 9 | Q-223011 | Tuerca exagonal M.18x1,5 | Ecrou à six pans M.18x1,5 | Hexagonal nut M.18x1,5 | 2 | | | | | | |
| 10 | Q-307002 | Arandela junta | Rondelle de joint | Joint washer | 2 | | | | | | |
| 11 | Z-601157 | Toma presión | Prise de pression | Pressure inlet | 1 | | | | | | |
| 12 | Q-881302 | Abrazadera 12-20 | Collier 12-20 | Clamp 12-20 | 6 | | | | | | |
| 13 | Q-881308 | Abrazadera 8-14 | Collier 8-14 | Clamp 8-14 | 2 | | | | | | |
| 14 | Z-601152 | Tubo termapres Ø10,5xØ5x280 | Tube thermapres Ø10,5xØ5x280 | Tube for therm.Ø10,5xØ5x280 | 1 | | | | | | |
| 15 | Z-641122 | Tubo de goma Ø17xØ10x205 | Tuyau caoutchouc Ø17xØ10x205 | Rubber tube Ø17xØ10x205 | 1 | | | | | | |
| 16 | Q-306021 | Arandela junta Ø16xØ10x1 | Rondelle joint Ø16xØ10x1 | Joint washer Ø16xØ10x1 | 1 | | | | | | |
| 17 | Q-232060 | Arandela plana A.10 | Rondelle plate A.10 | Flat washer A.10 | 1 | | | | | | |
| 18 | Q-012063 | Tornillo exagonal M.10x20 | Vis à six pans M.10x20 | Hexagonal screw M.10x20 | 1 | | | | | | |
| 19 | Z-601741 | Cuerpo calderín completo | Corps réservoir complet | Complete boiler body | 1 | | | | | | |
| 20 | Z-601723 | Aislante | Isolant | Insulant | 1 | | | | | | |
| 21 | Z-853022 | Termostato calderín | Thermostat réservoir | Boiler thermocouple | 1 | | | | | | |
| 22 | Q-162030 | Tuerca exagonal M.5 | Ecrou à six pans M.5 | Hexagonal nut M.5 | 2 | | | | | | |
| 23 | Q-242030 | Arandela abanico A.5 | Rondelle éventail A.5 | Fan-shaped washer A.5 | 2 | | | | | | |
| 24 | Q-221330 | Arandela plana A.5 | Rondelle plate A.5 | Flat washer A.5 | 2 | | | | | | |
| 25 | Q-162030 | Tuerca exagonal M.5 | Ecrou à six pans M.5 | Hexagonal nut M.5 | 2 | | | | | | |
| 26 | Q-242030 | Arandela abanico A.5 | Rondelle éventail A.5 | Fan-shaped washer A.5 | 2 | | | | | | |
| 27 | Z-681104 | Soporte dosificador | Support doseur | Dosing mechanism support | 1 | | | | | | |
| 28 | Q-011431 | Tornillo exagonal M.5x10 | Vis à six pans M.5x10 | Hexagonal screw M.5x10 | 2 | | | | | | |
| 29 | Z-651123 | Dosificador tensoactivo | Doseur tensioactif | Tensoactive dosing mechanism | 1 | | | | | | |
| 30 | Q-223011 | Tuerca exagonal M.18x1,5 | Ecrou à six pans M.18x1,5 | Hexagonal nut M.18x1,5 | 1 | | | | | | |
| 31 | Q-307002 | Arandela junta | Rondelle joint | Joint washer | 1 | | | | | | |

| N. | CODIGO | CONCEPTO : DESPIECE PARTE FUNCIONAL ACLARADO<br>SUJET : DEPIECEMENT PARTIE FONCTIONNELLE RINÇAGE<br>CONCEPT : DISASSEMBLY OF FUNCTIONAL RINSE PARTS | | | LAMINA N.<br>VUE N. 4<br>ILUSTR. N. | HOJA N.<br>PAGE N. 2<br>PAGE N. | PLANO N.<br>PLAN N B-501<br>DRAWING N. | | | | 10.<br>OBSERVACIONES |
|---|---|---|---|---|---|---|---|---|---|---|---|
| | | APARATO - APPAREIL - APPLIANCE : LAVAVAJILLAS - LAVEVAISSELLES - DISH WASHING MACHINE | | | MODELO Y CANTIDAD - MOD. ET QUANT. - MOD. & QUANT. | | | | | | |
| | | DENOMINACION | DENOMINATION | DESCRIPTION | FI-240 | | | | | | |
| 32 | Z-641903 | Rama aclarado inferior compl. | Conduite rinçage infér.compl. | Complete lower rinsing arm | 1 | | | | | | |
| 33 | Z-651932 | Rodete aclarado | Coussinet de rinçage | Rinse roll | 10 | | | | | | |
| 34 | Z-651931 | Tobera aclarado | Buse de rinçage | Rinsing nozzle | 10 | | | | | | |
| 35 | Q-306021 | Arandela junta Ø16xØ10x1 | Rondelle joint Ø16xØ10x1 | Joint washer Ø16xØ10x1 | 1 | | | | | | |
| 36 | Z-641901 | Rama aclarado superior compl. | Conduite rinçage supér.compl. | Complete upper rinsing arm | 1 | | | | | | |
| 37 | Q-153111 | Tornillo cilíndrico M.4x8 | Vis cylindrique M.4x8 | Cylindrical screw M.4x8 | 2 | | | | | | |
| 38 | Z-641106 | Duquesa plástico 250 c.c. | Récipient plastique 250 c.c. | Plastic container 250 c.c. | 1 | | | | | | |
| 39 | Z-651118 | Conducto tensoactivo dosificad. | Conduite tensioactif doseur | Dosing mechanism tensoact.duct | 1 | | | | | | |
| 40 | Z-601153 | Filtro aspiración tensoactivo | Filtre aspiration tensioactif | Tensoactive suction filter | 1 | | | | | | |
| 41 | Z-701152 | Peso filtro | Poids filtre | Filter weight | 1 | | | | | | |

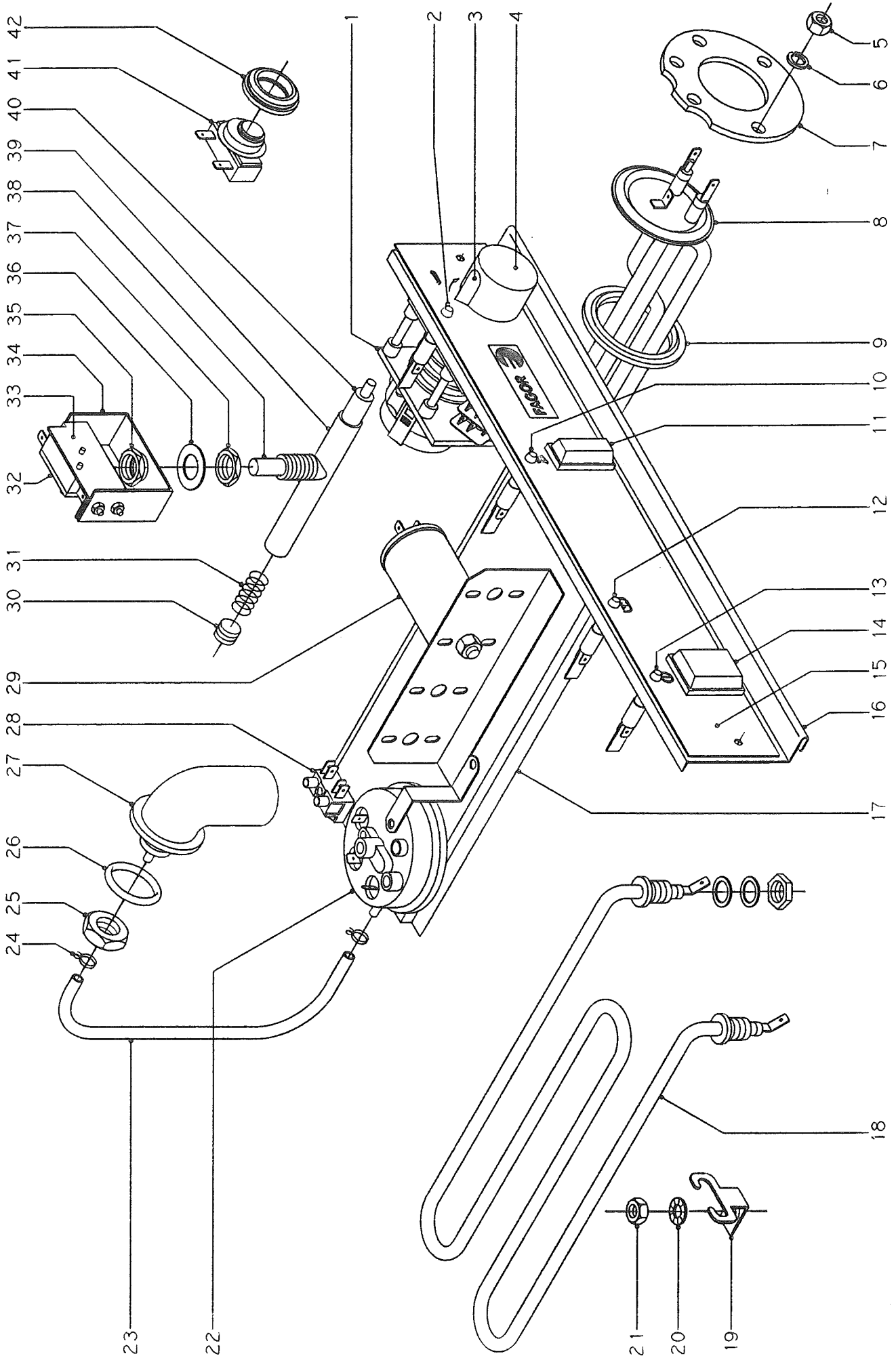


| N plano | Firma | Fecha | Aparato | Lamina | |
|---|---|---|---|---|---|
| B-502 | | IV-92 | LAVAVAJILLAS FI-240 | 5 | Fagor Industrial S.Coop. FAGOR<br>Onate |

| N. | CODIGO | CONCEPTO : DESPIECE PARTE FUNCIONAL ELECTRICA<br>SUJET : PARTIE ELECTRIQUE<br>CONCEPT : ELECTRIC PARTS | | | LAMINA N.<br>VUE N. 5<br>ILUSTR. N. | HOJA N.<br>PAGE N. 1<br>PAGE N. | PLANO N.<br>PLAN N B-502<br>DRAWING N. | | | | 12.<br>OBSERVACIONES |
|---|---|---|---|---|---|---|---|---|---|---|---|
| | | APARATO - APPAREIL - APPLIANCE : LAVAVAJILLAS - LAVEVAISSELLES - DISH WASHING MACHINE | | | MODELO Y CANTIDAD - MOD. ET QUANT. - MOD. & QUANT. | | | | | | |
| | | DENOMINACION | DENOMINATION | DESCRIPTION | FI-240 | | | | | | |
| 1 | Z-653031 | Programador ciclo | Programmateur cycle | Cycle programmer | 1 | | | | | | |
| 2 | Z-853004 | Piloto señalización (ámbar) | Voyant de signalisation orange | Indicator lamp (amber) | 1 | | | | | | |
| 3 | Z-603052 | Indicador de mando | Indicateur de commande | Control indicator | 1 | | | | | | |
| 4 | Z-603051 | Botón de mando | Bouton de commande | Control button | 1 | | | | | | |
| 5 | Q-163140 | Tuerca exagonal M.6 | Ecrou à six pans M.6 | Hexagonal nut M.6 | 5 | | | | | | |
| 6 | Q-262040 | Arandela muelle A.6 | Rondelle à ressort A.6 | Spring washer A.6 | 5 | | | | | | |
| 7 | Z-601710 | Contrabrida | Contre-bride | Counterflange | 1 | | | | | | |
| 8 | Z-621705 | Resistencia calderín completa | Résistance réservoir complète | Complete boiler resistance | 1 | | | | | | |
| 9 | Z-601751 | Junta calderín | Joint réservoir | Boiler joint | 1 | | | | | | |
| 10 | Z-853002 | Piloto señalización (transpar.) | Voyant signalisation (transp.) | Indicator lamp (transparent) | 1 | | | | | | |
| 11 | Z-683062 | Interruptor aclarado | Interrupteur de rinçage | Rinsing button | 1 | | | | | | |
| 12 | Z-853003 | Piloto señalización (verde) | Voyant signalisation (vert) | Indicator lamp (green) | 1 | | | | | | |
| 13 | Z-853002 | Piloto señalización (transpar.) | Voyant signalisation (transp.) | Indicator lamp (transparent) | 1 | | | | | | |
| 14 | Z-853001 | Interruptor general | Interrupteur général | Main switch | 1 | | | | | | |
| 15 | Z-642921 | Embellecedor adhesivo | Garniture adhésive | Adhesive adornment | 1 | | | | | | |
| 16 | Z-642941 | Frente portamandos | Devant | Front | 1 | | | | | | |
| 17 | Z-602951 | Soporte componentes completo | Support composants | Electrical parts support | 1 | | | | | | |
| 18 | Z-603601 | Resistencia tanque | Résistance réservoir | Tank resistance | 1 | | | | | | |
| 19 | Z-603602 | Soporte resistencia tanque | Support de resistance | Heating element support | 1 | | | | | | |
| 20 | Q-242040 | Arandela abanico A.6 | Rondelle éventail A.6 | Fan-shaped washer A.6 | 1 | | | | | | |
| 21 | Q-162040 | Tuerca exagonal M.6 | Ecrou | Nut | 1 | | | | | | |
| 22 | Z-603032 | Presostato de nivel | Pressostat | Pressurestat | 1 | | | | | | |
| 23 | Z-643016 | Conduc.presostato Ø8xØ4x1050 | Conduite pressostat Ø8xØ4x1050 | Pressurestat pipe Ø8xØ4x1050 | 1 | | | | | | |
| 24 | P-102154 | Brida elástica para tubo | Bride élastique pour tuyau | Elastic flange for tube | 2 | | | | | | |
| 25 | Q-221401 | Tuerca exagonal 1/2" | Ecrou à six pans 1/2" | Hexagonal nut, 1/2" | 1 | | | | | | |
| 26 | Q-307000 | Junta tórica | Joint torique | Thoric joint | 1 | | | | | | |
| 27 | Z-763008 | Cámara presostato | Chambre pressostat | Pressurestat chamber | 1 | | | | | | |
| 28 | Z-603017 | Regleta conexiones | Barrette connexions | Connection strip | 1 | | | | | | |
| 29 | LV-3213 | Condensador 10 MF | Condensateur 10 MF | Condenser 10 MF | 1 | | | | | | |
| 30 | Z-643015 | Tuerca tapón | Ecrou bouchon | Threaded stopper | 1 | | | | | | |
| 31 | Z-600605 | Resorte | Ressort | Spring | 1 | | | | | | |

| N. | CODIGO | CONCEPTO : DESPIECE PARTE FUNCIONAL ELECTRICA<br>SUJET : PARTIE ELECTRIQUE<br>CONCEPT : ELECTRIC PARTS | | | LAMINA N.<br>VUE N. 5<br>ILUSTR. N. | HOJA N.<br>PAGE N. 2<br>PAGE N. | PLANO N.<br>PLAN N B-502<br>DRAWING N. | | | | 13.<br>OBSERVACIONES |
|---|---|---|---|---|---|---|---|---|---|---|---|
| | | APARATO - APPAREIL - APPLIANCE : LAVAVAJILLAS - LAVEVAISSELLES - DISH WASHING MACHINE | | | MODELO Y CANTIDAD - MOD. ET QUANT. - MOD. & QUANT. | | | | | | |
| | | DENOMINACION | DENOMINATION | DESCRIPTION | FI-240 | | | | | | |
| 32 | Z-703096 | Microrruptor | Microrrupteur | Microswitch | 1 | | | | | | |
| 33 | Z-704207 | Soporte microrruptor | Support microrrupteur | Microswitch support | 1 | | | | | | |
| 34 | Z-704206 | ``U'' fijación | ``U'' fixation | Fastening ``U'' bracket | 1 | | | | | | |
| 35 | Q-223021 | Tuerca exagonal M.15x1 | Ecrou à six pans M.15x1 | Hexagonal nut M.15x1 | 1 | | | | | | |
| 36 | Q-307002 | Arandela junta Ø28xØ15x1 | Rondelle joint Ø28xØ15x1 | Joint washer Ø28xØ15x1 | 1 | | | | | | |
| 37 | Q-223021 | Tuerca exagonal M.15x1 | Ecrou à six pans M.15x1 | Hexagonal nut M.15x1 | 1 | | | | | | |
| 38 | Z-643014 | Pulsador micro | Poussoir micro | Micro pushbutton | 1 | | | | | | |
| 39 | Z-643010 | Tubo guía | Tube guidage | Guiding tube | 1 | | | | | | |
| 40 | Z-643013 | Pulsador puerta | Poussoir porte | Door pushbutton | 1 | | | | | | |
| 41 | Z-653013 | Termostato doble | Thermostat double | Double thermostat | 1 | | | | | | |
| 42 | N-503017 | Soporte termostato | Support thermostat | Thermostat support | 1 | | | | | | |

| N. | CODIGO | CONCEPTO : VARIOS<br>SUJET : AUTRES<br>CONCEPT : VARIOUS | | | LAMINA N.<br>VUE N.<br>ILUSTR. N. | HOJA N.<br>PAGE N.<br>PAGE N. | PLANO N.<br>PLAN N<br>DRAWING N. | | | | 14.<br>OBSERVACIONES |
|---|---|---|---|---|---|---|---|---|---|---|---|
| | | APARATO - APPAREIL - APPLIANCE : LAVAVAJILLAS - LAVEVAISSELLES - DISH WASHING MACHINE | | | MODELO Y CANTIDAD - MOD. ET QUANT. - MOD. & QUANT. | | | | | | |
| | | DENOMINACION | DENOMINATION | DESCRIPTION | FI-240 | | | | | | |
| | Z-603041 | Cable de alimentación | Cable d'alimentation | Freed cable | 1 | | | | | | |
| | Z-603024 | Retenedor del cable | Serre-cable | Cable retainer | 1 | | | | | | |
| | P-106503 | Placa matrícula | Plaque matricule | Nameplate | 1 | | | | | | |
| | Z-606111 | Folleto de instrucciones | Livret d'instructions | Instructions brochure | 1 | | | | | | |
| | Z-603121 | Esquema eléctrico adhesivo | Schema electrique | Electrical schematic | 1 | | | | | | |

| N. | CODIGO | CONCEPTO : CAMBIOS A REALIZAR PARA OBTENER LA VERSION 220 V. 60 Hz. BIFASICA<br>SUJET : CHANGEMENTS A REALISER POUR OBTENIR LA VERSION 220 V. 60 Hz. BIPHASEE<br>CONCEPT : MODIFICATIONS FOR OBTAINING THE TWO-PHASE VERSION 220 V. 60 Hz. | | | LAMINA N.<br>VUE N. 3<br>ILUSTR. N. | HOJA N.<br>PAGE N.<br>PAGE N. | PLANO N.<br>PLAN N B-500<br>DRAWING N. | | | 15.<br>OBSERVACIONES |
|---|---|---|---|---|---|---|---|---|---|---|
| | | APARATO - APPAREIL - APPLIANCE : LAVAVAJILLAS - LAVEVAISSELLES - DISH WASHING MACHINE | | | MODELO Y CANTIDAD - MOD. ET QUANT. - MOD. & QUANT. | | | | | |
| | | DENOMINACION | DENOMINATION | DESCRIPTION | FI-240 | | | | | |
| | | PIEZAS A ELIMINAR | PIECES A ELIMINER | PARTS TO BE REMOVED | | | | | | |
| 8 | Z-641001 | Bomba de lavado | Pompe de lavage | Washing pump | 1 | | | | | |
| s/n | P-106503 | Placa matrícula (cambio grabación) | Plaque matricule (changement gravure) | Nameplate (change engraved data) | 1 | | | | | |
| | S-106501 | Tarjeta de garantía y control | Carte de garantie | Certificate of guarantee | 1 | | | | | |
| | | PIEZAS A INTRODUCIR | PIECES A INTRODUIRE | PARTS TO BE INCORPORATED | | | | | | |
| 8 | Z-647501 | Bomba de lavado | Pompe de lavage | Washing pump | 1 | | | | | |
| s/n | P-106503 | Placa matrícula (cambio grabación) | Plaque matricule (changement gravure) | Nameplate (change engraved data) | 1 | | | | | |

| N. | CODIGO | CONCEPTO : CAMBIOS A REALIZAR PARA OBTENER LA VERSION 240 V. 50 Hz. BIFASICA<br>SUJET : CHANGEMENTS A REALISER POUR OBTENIR LA VERSION 240 V. 50 Hz. BIPHASEE<br>CONCEPT : MODIFICATIONS FOR OBTAINING THE TWO-PHASE VERSION 240 V. 50 Hz. | | | LAMINA N.<br>VUE N. 3<br>ILUSTR. N. 5 | HOJA N.<br>PAGE N.<br>PAGE N. | PLANO N.<br>PLAN N B-500 B-502<br>DRAWING N. | | | 16. |
|---|---|---|---|---|---|---|---|---|---|---|
| | | APARATO - APPAREIL - APPLIANCE : LAVAVAJILLAS - LAVEVAISSELLES - DISH WASHING MACHINE | | | MODELO Y CANTIDAD - MOD. ET QUANT. - MOD. & QUANT. | | | | | OBSERVACIONES |
| | | DENOMINACION | DENOMINATION | DESCRIPTION | FI-240 | | | | | |
| | | PIEZAS A ELIMINAR | PIECES A ELIMINER | PARTS TO BE REMOVED | | | | | | |
| 3 | Z-641001 | Bomba de lavado | Pompe de lavage | Washing pump | 1 | | | | | LAMINA 3 |
| | | | | | | | | | | |
| 8 | Z-621705 | Resistencia de calderín compl. | Résistance boîtier | Boiler resistance | 1 | | | | | LAMINA 5 |
| | | | | | | | | | | |
| | P-306506 | Indicador de tensión (220V.) | Indicateur de tension (220V.) | Voltage indicator (220V.) | 1 | | | | | |
| | S-106501 | Tarjeta de garantía y control | Carte de garantie | Certificate of guarantee | 1 | | | | | |
| | P-106503 | Placa matrícula | Plaque matricule | Nameplate | 1 | | | | | |
| | | | | | | | | | | |
| | | | | | | | | | | |
| | | | | | | | | | | |
| | | | | | | | | | | |
| | | PIEZAS A INTRODUCIR | PIECES A INTRODUIRE | PARTS TO BE INCORPORATED | | | | | | |
| 8 | Z-853301 | Bomba de lavado | Pompe de lavage | Washing pump | 1 | | | | | LAMINA 3 |
| | | | | | | | | | | |
| 8 | Z-623305 | Resistencia de calderín compl. | Résistance boîtier | Boiler resistance | 1 | | | | | LAMINA 5 |
| | | | | | | | | | | |
| | Z-663311 | Placa norma de conexiones | Plate normative electrique | Normative plate | 1 | | | | | |
| | X-703303 | Indicador de tensión (240V.) | Indicateur de tension (240V.) | Voltage indicator (240V.) | 1 | | | | | |
| | P-106503 | Placa matrícula | Plaque matricule | Nameplate | 1 | | | | | |
| | | | | | | | | | | |
| | | | | | | | | | | |
| | | | | | | | | | | |
| | | | | | | | | | | |
| | | | | | | | | | | |
| | | | | | | | | | | |
| | | | | | | | | | | |
| | | | | | | | | | | |
| | | | | | | | | | | |
| | | | | | | | | | | |
| | | | | | | | | | | |

| N. | CODIGO | CONCEPTO : VERSION DINAMARCA<br>SUJET : VERSION DANEMARK<br>CONCEPT : VERSION DENMARK | | | LAMINA N.<br>VUE N.<br>ILUSTR. N. | HOJA N.<br>PAGE N.<br>PAGE N. | PLANO N.<br>PLAN N<br>DRAWING N. | | | | 17.<br>OBSERVACIONES |
|---|---|---|---|---|---|---|---|---|---|---|---|
| | | APARATO - APPAREIL - APPLIANCE : LAVAVAJILLAS - LAVEVAISSELLES - DISH WASHING MACHINE | | | MODELO Y CANTIDAD - MOD. ET QUANT. - MOD. & QUANT. | | | | | | |
| | | DENOMINACION | DENOMINATION | DESCRIPTION | FI-240 | | | | | | |
| | Z-652918 | Guía contactor | Guide contacteur | Switch guide | 1 | | | | | | |
| | P-453023 | Contactor 220 V. 50 Hz. | Contacteur 220 V. 50 Hz. | Contactor 220 V. 50 Hz. | 1 | | | | | | |
| | Q-151320 | Tornillo redondo M.4x6 | Vis | Screw | 2 | | | | | | |
| | Q-261020 | Arandela muelle A.4 | Rondelle | Washer | 2 | | | | | | |
| | Q-161320 | Tuerca exagonal M.4 | Ecrou à six pans M.4 | Hexagonal nut M.4 | 2 | | | | | | |
| | Z-603017 | Regleta de conexiones | Domino | Connector | 1 | | | | | | |
| | Q-021423 | Tornillo cilíndrico M.4x20 | Vis cylindrique M.4x20 | Cylindrical screw M.4x20 | 1 | | | | | | |
| | Q-261020 | Arandela muelle A.4 | Rondelle | Washer | 1 | | | | | | |
| | Q-161320 | Tuerca exagonal M.4 | Ecrou à six pans M.4 | Hexagonal nut M.4 | 1 | | | | | | |
| | N-023022 | Rótulo adhesivo R-S-T-N | Lettres adhesives R-S-T-N | Adhesive letters R-S-T-N | 1 | | | | | | |
| | Z-608105 | Cable manguera 3x1,5+N+T | Cablage | Wires | 1 | | | | | | |
| | Z-608106 | Cableado trifásico | Cablage pour III | Wires for III | 1 | | | | | | |
| | HC-15820 | Esquema de montaje | Schema d'ensamblage | Schema | 1 | | | | | | |
| | Z-608121 | Esquema eléctrico adhesivo | Schema electrique | Electrical schematic | 1 | | | | | | |
| | P-306507 | Indicador de tensión (380 V.) | Indicateur de tension (380 V.) | Tension indicator (380 V.) | 1 | | | | | | |
| | P-106503 | Placa matrícula | Plaque de caracteristiques | Caracteristics plate | 1 | | | | | | |

## RELACION DE PIEZAS RECOMENDADAS

## LAVAVAJILLAS FI-240

| REFERENCIA | DENOMINACION |
|---|---|
| Z-605303 | Cestillo cubiertos |
| Z-641001 | Motobomba |
| V-1138 | Junta y retén de bomba |
| V-1492 | Turbina |
| V-1432 | Junta de tapa |
| Z-651123 | Dosificador |
| Z-602104 | Aliviadero |
| Z-645920 | Plato de giro |
| Z-600704 | Tobera de lavado inferior |
| Z-600705 | Tobera de lavado superior |
| Z-640903 | Filtro |
| Z-600905 | Pasamuros soporte de filtro |
| Z-601155 | Electroválvula doble |
| Z-601914 | Tobera de aclarado |
| Z-853022 | Termostato de calderín |
| Z-601157 | Toma de presión |
| Z-653031 | Programador de ciclo |
| Z-603051 | Botón de mando |
| Z-603052 | Indicador |
| Z-683062 | Interruptor aclarado |
| Z-853001 | Interruptor general |
| Z-703096 | Microrruptor |
| Z-603032 | Presostato simple |
| Z-603601 | Resistencia de tanque |
| Z-621705 | Resistencia calderín |
| Z-653013 | Termostato de cuba |
| V-3213 | Condensador |

Mod. FI-12 S, FI-18 S, S-1000, S-2000, LT-1000
LT-2000, FK-120 FK-180, GX-4, GX-5, LB-R 12, LB-R 18 220/240 V. 50/60 Hz.
⑦ FI-240, SK-200, 8, 12, G 12 S ⑥ 800, 1500 ⑧

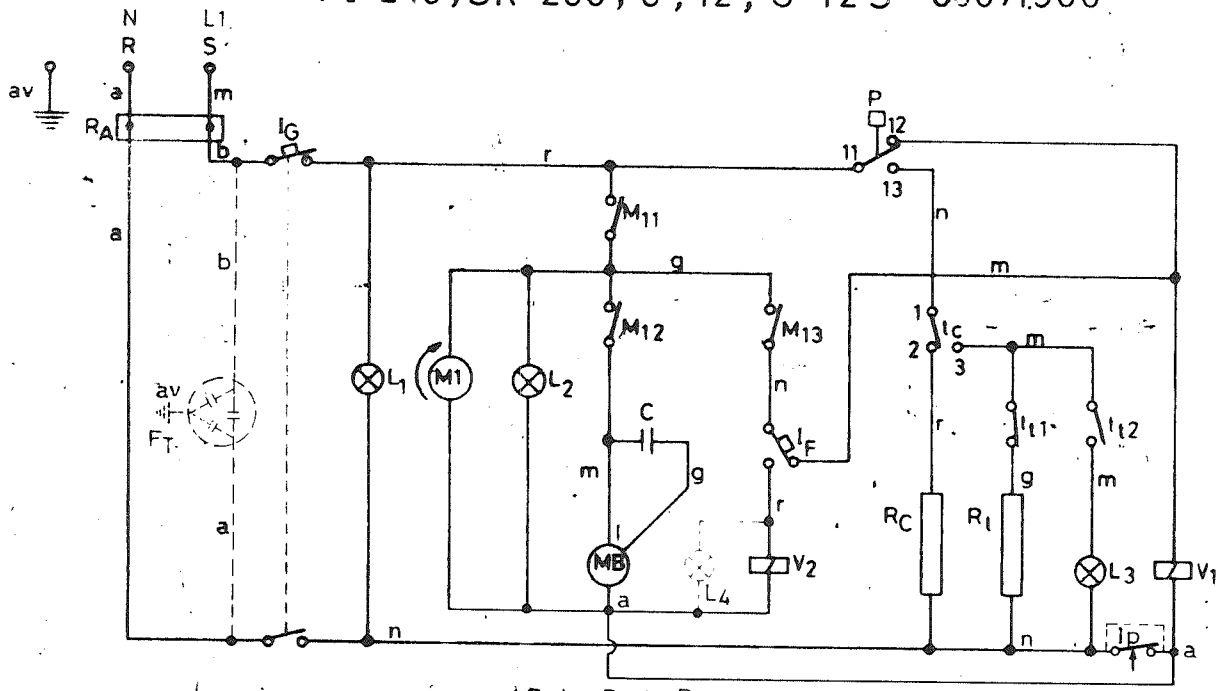


r = Rojo - Red - Rouge
n = Negro - Black - Noir
b = Blanco - White - Blanc
g = Gris - Grey - Gris
m = Marrón - Brown - Marron
a = Azul - Blue - Bleu
av = Amarillo verde - Yellow green - Jaune vert

PROGRAMADOR $P_1$ (Ciclo máquina)

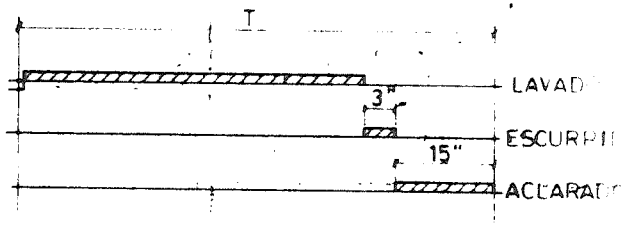


FUNCION DE LOS MICROS

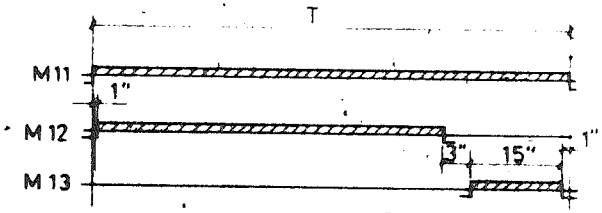


NOTAS.- Fondo del esquema: Color blanco
Grabaciones: Color negro
Medidas: 200 x 105
Nº Clasificación: Parte inferior derecha

| | |
|---|---|
| $R_t$ | Resistencia tanque |
| $t_t$ | Termostato tanque |
| $I_G$ | Interruptor general |
| P | Presostato |
| $L_1$ | Lámpara señalizadora fuerza |
| $L_2$ | Lámpara señalizadora ciclo |
| $L_3$ | Lámpara señaliz. máq. preparada |
| $t_c$ | Termostato calderín |
| $I_p$ | Interruptor puerta |
| $F_T$ | Filtro interferencias |

| | |
|---|---|
| $R_C$ | Resistencia calderín |
| $M_1$ | Motor programador $P_1$ |
| $M_{11}$ | Microinterruptor programador |
| $M_{12}$ | Microinterruptor programador |
| $M_{13}$ | Microinterruptor programador |
| $M_B$ | Motobomba |
| $V_1$ | Electroválvula descalcificador |
| $V_2$ | Electroválvula aclarado en frío |
| $L_4$ | Lampara señalizadora aclarado frío |
| $R_A$ | Regleta alimentación |
| $I_F$ | Interruptor aclarado en frío |
| C | Condensador |

ESQUEMA TEORICO ADHESIVO (220/240 V. 50/60 Hz) Nº Clasificación Z-603121

| N.º | Alcance - Modificación | Nombre proponente / Propuesta de | Data-Fecha |
|---|---|---|---|
| ④ | Unificar con el FI 22 | Albes | 13-9-88 |
| ⑤ | Introducir versiones | Albes | 7-2-89 |
| ⑥ | Introducir Mod. G 12 S | Albes | |
| ⑦ | Cambiar denominación FI-22 a FI-240 | COMERCIAL | 26-11-90 |
| ⑧ | Introducir versiones 800 y 1500 | Albes | 5-4-91 |

| Tolerancia arrancada | Tolerancias generales |
|---|---|
| > 5 ± | 50÷100 ± |
| 5÷25 ± | 100< + |
| 25÷50 ± | ∞ ± |

| | Dinero-Firma | Data - Fecha |
|---|---|---|
| Mercantiles-Dibujado | [illegible] | 13-9-88 |
| Proteccionistas-Proyectado | | |
| Colaborador-Comprobado | | |

FAGOR INDUSTRIAL

Azulado lavabo
Mecanizado superficie

Nuestro - Escala

Lavavasos

Plano hou es daitako erabil ez berriztu guro baimenik gabe
Este plano no puede ser usado ni reproducido sin nuestra autorización

Plano zenbakia - Plano nº HC-15785-
Sustituye al nº HC-15785 3
Sustituido por

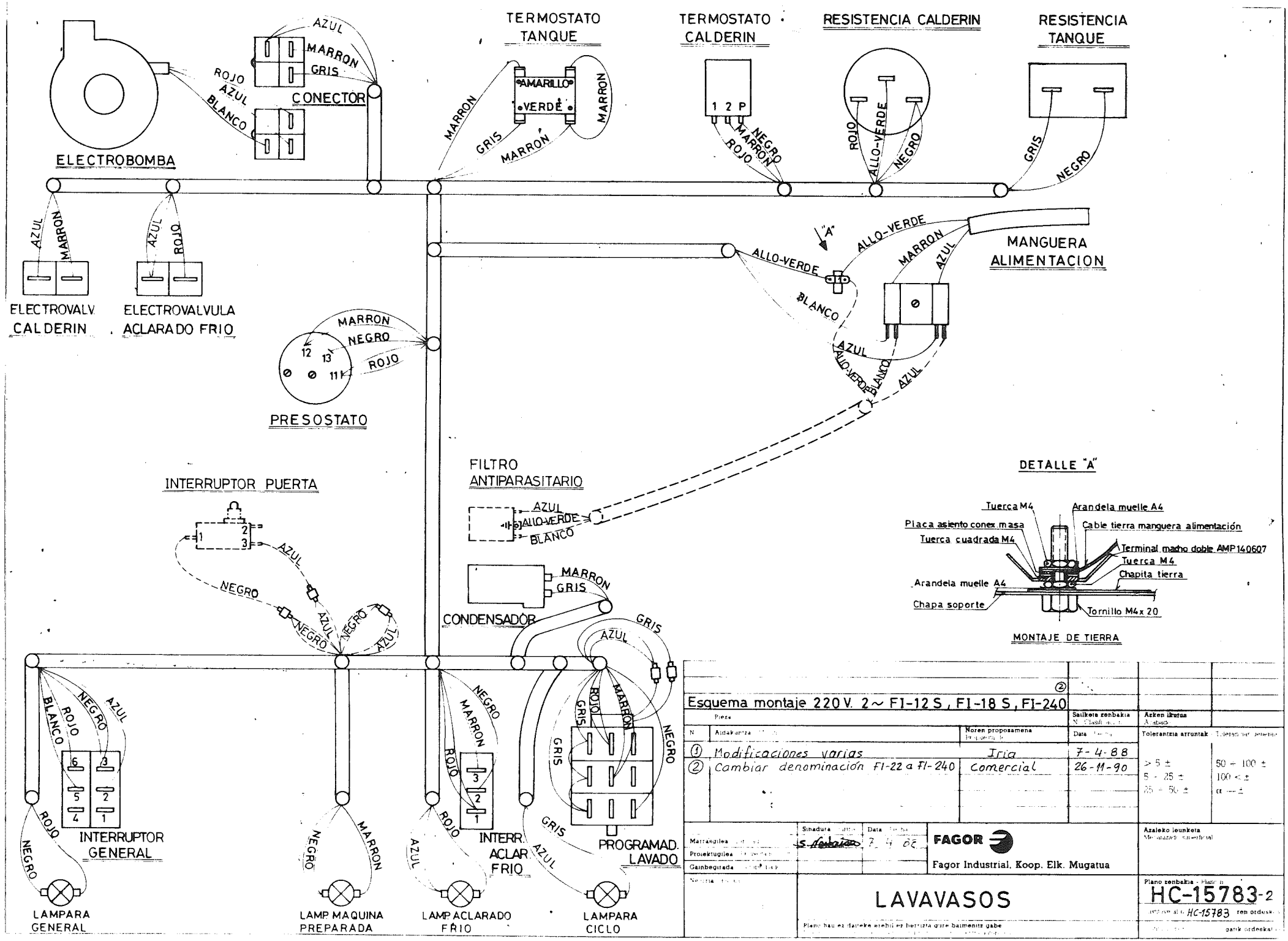
ELECTROBOMBA
CONECTOR
AZUL
MARRON
GRIS
ROJO
AZUL
BLANCO
TERMOSTATO TANQUE
AMARILLO
VERDE
MARRON
GRIS
MARRON
TERMOSTATO CALDERIN
1 2 P
NEGRO
MARRON
ROJO
RESISTENCIA CALDERIN
ROJO
ALLO-VERDE
NEGRO
RESISTENCIA TANQUE
GRIS
NEGRO
ELECTROVALV. CALDERIN
AZUL
MARRON
ELECTROVALVULA ACLARADO FRIO
AZUL
ROJO
PRESOSTATO
MARRON
NEGRO
ROJO
12
13
11
"A"
ALLO-VERDE
MARRON
AZUL
MANGUERA ALIMENTACION
ALLO-VERDE
BLANCO
AZUL
ALLO-VERDE
BLANCO
AZUL
INTERRUPTOR PUERTA
1
2
3
AZUL
NEGRO
AZUL
NEGRO
NEGRO
AZUL
FILTRO ANTIPARASITARIO
AZUL
ALLO-VERDE
BLANCO
CONDENSADOR
MARRON
GRIS
GRIS
AZUL
DETALLE "A"
Tuerca M4
Arandela muelle A4
Placa asiento conex. masa
Cable tierra manguera alimentación
Tuerca cuadrada M4
Terminal macho doble AMP 140607
Tuerca M4
Chapita tierra
Arandela muelle A4
Chapa soporte
Tornillo M4 x 20
MONTAJE DE TIERRA
BLANCO
ROJO
NEGRO
AZUL
6
3
5
2
4
1
INTERRUPTOR GENERAL
ROJO
NEGRO
LAMPARA GENERAL
NEGRO
MARRON
LAMP. MAQUINA PREPARADA
NEGRO
MARRON
ROJO
3
2
1
INTERR. ACLAR. FRIO
ROJO
AZUL
LAMP. ACLARADO FRIO
GRIS
ROJO
MARRON
GRIS
NEGRO
PROGRAMAD. LAVADO
GRIS
AZUL
LAMPARA CICLO
Esquema montaje 220 V. 2 ~ FI-12 S, FI-18 S, FI-240
Pieza
Sailkota zenbakia
Azken ikutua
N
Aldakuntza
Noren proposamena
Data
Tolerantzia arruntak
① Modificaciones varias
Iria
7-4-88
② Cambiar denominación FI-22 a FI-240
Comercial
26-11-90
> 5 ±
5 - 25 ±
25 - 50 ±
50 - 100 ±
100 < ±
α — ±
Marrasgilea
Proiektugilea
Gainbegirada
Sinadura
Data
7 4 88
FAGOR
Fagor Industrial, Koop. Elk. Mugatua
Azaleko leunketa
LAVAVASOS
Plano zenbakia
HC-15783-2
HC-15783
Plano hau ez daiteke erebil ez herrizta gure baimenitz gabe