MESAS SNACK CONCEPT / SNACK TABLES CONCEPT

CMSP-150 19029276 / CMSN-150 19029376

CMSP-200 19029277 / CMSN-200 19029378

CMSP-250 19029279 / CMSN-250 19029400

CMSP-300 19029291 / CMSN-300 19029404

Versión 2015-01

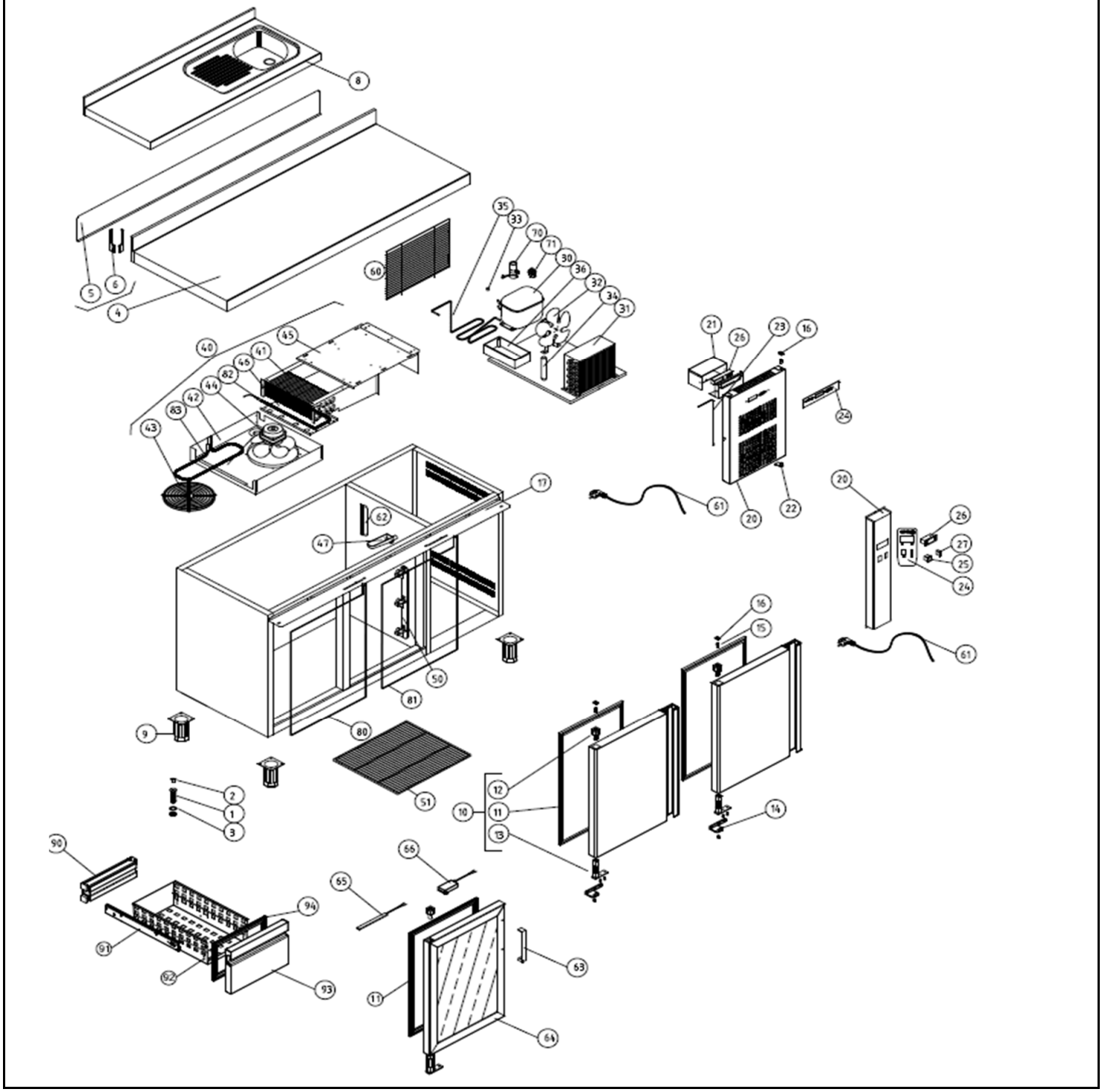

MESAS SNACK CONCEPT / SNACK TABLES CONCEPT

CMSP-117-R 19029294 / CMSN-117-R 19029406

CMSP-169-R 19029295 / CMSN-169-R 19029407

CMSP--222-R 19029296 / CMSN-222-R 19029408

CMSP--274-R 19029297

Versión 2015-01

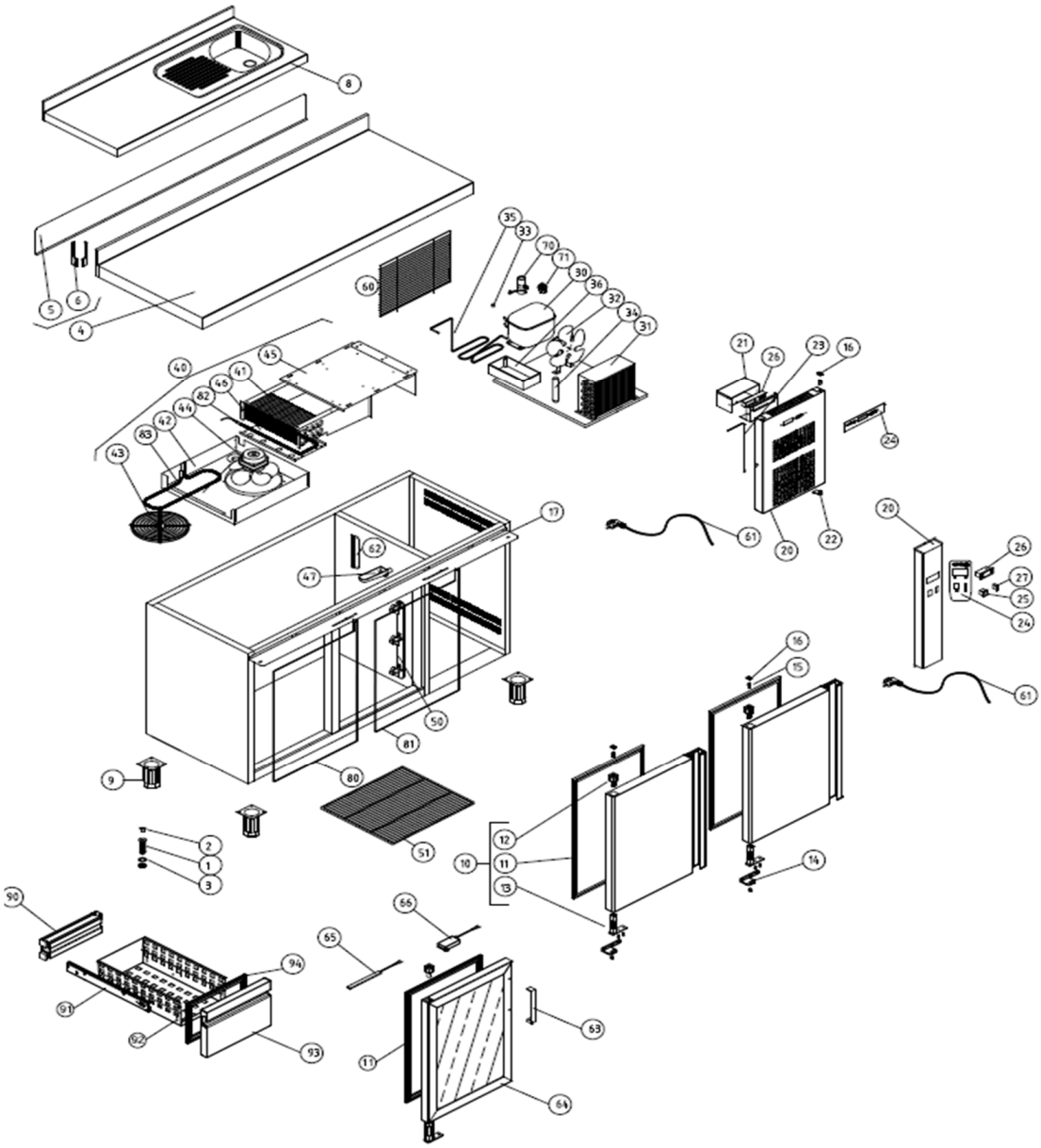

MESAS SNACK CONCEPT / SNACK TABLES CONCEPT

FAGOR

- CMSP-150 19029276 / CMSN-150 19029376
- CMSP-200 19029277 / CMSN-200 19029378
- CMSP-250 19029279 / CMSN-250 19029400
- CMSP-300 19029291 / CMSN-300 19029404

Versión 2015-01

Nº	CODE CÓDIGO	RECOM.	DESCRIPCIÓN	DESCRIPTION	CMSP-150	CMSP-200	CMSP-250	CMSP-300	CMSP-150 F	CMSP-200 F	CMSP-250 F	CMSP-300 F	CMSN-150	CMSN-200	CMSN-250	CMSN-300
1	12037489		DESAG COMPL 3/4 GRIS+TUERCA	COMPLETE DRAINAGE 3/4 GREY + NUT	1	1	1	1	1	1	1	1	1	1	1	1
2	12037989		TAPON DESAGÜE DE 3/4 CIEGO	3/4 BLIND LIP DRAINAGE	1	1	1	1	1	1	1	1	1	1	1	1
3	12037891		JUNTA GOMA DESAGÜE 3/4	3/4 DRAINAGE JOINT RUBBER	1	1	1	1	1	1	1	1	1	1	1	1
4	12038191		ENCIM.MSP-150 PETO	MSP-150 TOP WITH SPLASH BACK	1								1			
4	12038193		ENCIM.MSP-200 PETO	MSP-200 TOP WITH SPLASH BACK		1								1		
4	12026967		ENCIM.MSP-250 PETO	MSP-250 TOP WITH SPLASH BACK			1								1	
4	12026912		ENCIM.MSP-300 PETO	MSP-300 TOP WITH SPLASH BACK				1								1
5	12074344		PROT.TRAS.ENC.MSP-150	MSP-150 TOP BACK PROTECTOR	1				1				1			
5	12074345		PROT.TRAS.ENC.MSP-200	MSP-200 TOP BACK PROTECTOR		1	1	1		1	1	1		1	1	1
5	12074346		SUP. PROT. TRAS. ENC. MSP	MSP TOP BACK UPPER PROTECTOR			1	1			1	1			1	1
6	12036012		JUEGO TAPETAS ENCIM.ZAMAK	TOP ZAMAK SET	1	1	1	1	1	1	1	1	1	1	1	1
8	12079633		ENC.MSP-150 FREG.PETO	MSP-150 TOP WITH SINK & SPLASH BACK					1							
8	12079634		ENCIM.MSP-200 FREG PETO	MSP-200 TOP WITH SINK & SPLASH BACK						1						
8	12079635		ENCIM.MSP-250 FREG PETO	MSP-250 TOP WITH SINK & SPLASH BACK							1					
8	12085756		ENCIM.MSP-300 FREG PETO	MSP-300 TOP WITH SINK & SPLASH BACK								1				
9	12033566		PATA REGULAB ARM GASTRO	GASTRO CABINET ADJUSTABLE LEG	4	4	6	6	4	4	6	6	4	4	6	6
10	12043342		PUE MSP/MSN AP. IZDA CONCEPT	CONCEPT LEFT OPEN MSP/MSN DOOR	2	3	4	5	2	3	4	5	2	3	4	5
11	12035412		BURLETE PUERTA MSP	MSP GASKET DOOR	2	3	4	5	2	3	4	5	2	3	4	5
12	12037723		CAJA ALOJAMIENTO MUELLE GRIS	GREY SPRING HOUSING BOX	2	3	4	5	2	3	4	5	2	3	4	5
13	12038130		BIS.TRS1D DOBL MUELLE DV-2608	DOUBLE SPRING HINGE TRS1D DV-2608	2	3	4	5	2	3	4	5	2	3	4	5
14	12036986		SOP.BISAG.INF.IZD.	LEFT LOW HINGE SUPPORT	2	3	4	5	2	3	4	5	2	3	4	5
15	12037138		EJE ROSCA EXT.30X10INOX MESAS	COUNTERS EXTERIOR THREAD AXIS 30X10STAINLESS	3	4	5	6	3	4	5	6	3	4	5	6

MESAS SNACK CONCEPT / SNACK TABLES CONCEPT

FAGOR

- CMSP-150 19029276 / CMSN-150 19029376
- CMSP-200 19029277 / CMSN-200 19029378
- CMSP-250 19029279 / CMSN-250 19029400
- CMSP-300 19029291 / CMSN-300 19029404

Versión 2015-01

Nº	CODE CÓDIGO	RECOM.	DESCRIPCIÓN	DESCRIPTION	CMSP-150	CMSP-200	CMSP-250	CMSP-300	CMSP-150 F	CMSP-200 F	CMSP-250 F	CMSP-300 F	CMSN-150	CMSN-200	CMSN-250	CMSN-300
16	12050272		TUERC.RAPIDA TRT M6-2	FAST NUT TRT M6-2	3	4	5	6	3	4	5	6	3	4	5	6
17	12033966		SOPOR.SUP.PUERTAS MSP-150	MSP-150 DOOR UPPER SUPPORT	1				1				1			
17	12033254		SOP.SUP.PUER.MSP20-25-30	MSP20-25-30 DOOR UPPER SUPPORT		1	1	1		1	1	1		1	1	1
17	12035853		SOP.SUP.PUERT.MSP-250	MSP-250 DOOR UPPER SUPPORT			1				1				1	
17	12034882		SOPORT.SUP.PUERTAS MSP-300	MSP-300 DOOR UPPER SUPPORT				1				1				1
20	12111098		REJILLA GRUPO MESAS FAGOR CONCEPT	FAGOR CONCEPT COUNTERS CONTROL PANEL	1	1	1	1	1	1	1	1	1	1	1	1
21	12074402		PROTECCION POWER COMPACT MESAS	COUNTERS POWER COMPACT PROTECTOR	1	1	1	1	1	1	1	1	1	1	1	1
22	12037372		SOPORTE ZAMAK GIRO REJILLA	CONTROL PANEL ZAMAK SUPPORT	1	1	1	1	1	1	1	1	1	1	1	1
23	12045530		SONDA TERMOSTATO	THERMOSTAT PROBE	1	1	1	1	1	1	1	1	2	2	2	2
24	12104752		ADHESIVO G. CONCEPT PWC	PWC CONCEPT RANGE STICKER	1	1	1	1	1	1	1	1	1	1	1	1
26	12043611		TERMOSTATO POWER COMPAC REFRIG	REFRIGERATION POWER COMPACT THERMOSTAT	1	1	1	1	1	1	1	1				
26	12040693		TERMOSTATO POWER COMPAC CONG.	FREEZER POWER COMPACT THERMOSTAT									1	1	1	1
30	12059155		COMPR. NL6.1MF 105G6660	COMPR. NL6.1MF 105G6660	1				1							
30	12059154		COMPR. NL7.3MF 105G6772	COMPRES.NL7.3MF 105G6772		1				1						
30	12046754		COMP.NEK6210Z EMBRACO	COMP.NEK6210Z EMBRACO			1	1			1	1				
30	12028143		COMPR.SC-12-CL R404A	COMPR.SC-12-CL R404A									1			
30	12027322		COMPR.SC-15-CL R404A	COMPR.SC-15-CL R404A										1	1	1
31	12032903		CONDENSADOR 9x2	9X2 CONDENSER	1	1			1	1						
31	12032340		CONDENSADOR 9x3 FAGC0021	FAGC0021 9X3 CONDENSER			1	1			1	1				
31	12031472		CONDENSADOR 10X4 NEUTRO	NEUTRAL 10X4 CONDENSER									1	1		
31	12031310		CONDENSADOR 10x4 TECHO	CEILING 10X4 CONDENSER										1		
31	12068194		CONDENSADOR 11x4 D270A4S BAFLE	D270A4S BAFLE 11X4 CONDENSER											1	1

MESAS SNACK CONCEPT / SNACK TABLES CONCEPT

FAGOR

- CMSP-150 19029276 / CMSN-150 19029376
- CMSP-200 19029277 / CMSN-200 19029378
- CMSP-250 19029279 / CMSN-250 19029400
- CMSP-300 19029291 / CMSN-300 19029404

Versión 2015-01

Nº	CODE CÓDIGO	RECOM.	DESCRIPCIÓN	DESCRIPTION	CMSP-150	CMSP-200	CMSP-250	CMSP-300	CMSP-150 F	CMSP-200 F	CMSP-250 F	CMSP-300 F	CMSN-150	CMSN-200	CMSN-250	CMSN-300
31	12032903		CONDENSADOR 9x2	9X2 CONDENSER	1	1			1	1						
31	12032340		CONDENSADOR 9x3 FAGC0021	FAGC0021 9X3 CONDENSER			1	1			1	1				
31	12031472		CONDENSADOR 10X4 NEUTRO	NEUTRAL 10X4 CONDENSER									1	1		
31	12031310		CONDENSADOR 10x4 TECHO	CEILING 10X4 CONDENSER										1		
31	12068194		CONDENSADOR 11x4 D270A4S BAFLE	D270A4S BAFLE 11X4 CONDENSER											1	1
32	12033477		VENTILADOR 10W PATA PALA 220V	10W 220V MOTOR WITH LEG AND FAN	1	1	1	1	1	1	1	1	1	1		
32	12032471		VENT.16WPALA254MM28ºCABLE1.5MT	16W MOTOR WITH 254MM 28º FAN AND 1,5MT CABLE											1	1
33	12037369		VALVULA OBUS COMPLETA RF.HB-1S	OBUS VALVE RF.HB-1S	1	1	1	1	1	1	1	1	1	1	1	1
34	12036970		FILTRO DESHIDRAT.40GR 1/4X1/4	DEHYDRATOR FILTER 40G 1/4X1/4	1	1	1	1	1	1	1	1	1	1	1	1
35	12072918		EVAP.AUT.MESAS CONCEPT	CONCEPT COUNTER AUTOMATIC EVAPORATION	1	1	1	1	1	1	1	1	1	1	1	1
36	12036623		BANDEJA EVAPORACION AUTOMÁTICA	AUTOMATIC EVAPORATION PAN	1	1	1	1	1	1	1	1	1	1	1	1
40	12030989		UD.EV.MSP150,200,135,180 COMP.	MSP150,200,135,180 EVAPORATION UNIT	1	1			1	1						
40	12079625		UD.EV. MSP250,300,225,270 COMP	MSP250,300,225,270 EVAPORATION UNIT			1	1			1	1				
40	12085355		UD.EV. MSN150,200,135,180 COMP	MSN150,200,135,180 EVAPORATION UNIT									1	1		
40	12085398		UD.EV. MSN/MPN-250,300	MSN/MPN-250,300 EVAPORATION UNIT											1	1
41	12041888		BAT.5T4R300A4S PINT.MESAS	COUNTERS PAINTED 5T4R300A4S EVAPORATOR	1	1			1	1						
41	12049149		BAT 6T4R300A4S PINT.MESAS	COUNTERS PAINTED 6T4R300A4S EVAPORATOR			1	1			1	1				
41	12044662		BAT.6T4R300A6S PINTADO.MESAS	COUNTERS PAINTED 6T4R300A6S EVAPORATOR									1	1		
41	12045174		EV. FC71B RH, 7T4R295A6S PINT.	PAINTED FC71B RH, 7T4R295A6S EVAPORATOR											1	1
42	12040457		SUJ.VENTIL.MSP-150,200 COMPACT	COMPACT MSP-150,200 FAN SUPPORT	1	1	1	1	1	1	1	1	1	1		
42	12074540		TECHO EVAP.MESAS/ARMARIOS	COUNTERS/CABINETS EVAPORATOR CEILING											1	1
43	12034663		REJILLA VENT.D.246 PINTADA	PAINTED D246MM FAN GRID	1	1	1	1	1	1	1	1	1	1	1	1

MESAS SNACK CONCEPT / SNACK TABLES CONCEPT

FAGOR

- CMSP-150 19029276 / CMSN-150 19029376
- CMSP-200 19029277 / CMSN-200 19029378
- CMSP-250 19029279 / CMSN-250 19029400
- CMSP-300 19029291 / CMSN-300 19029404

Versión 2015-01

Nº	CODE CÓDIGO	RECOM.	DESCRIPCIÓN	DESCRIPTION	CMSP-150	CMSP-200	CMSP-250	CMSP-300	CMSP-150 F	CMSP-200 F	CMSP-250 F	CMSP-300 F	CMSN-150	CMSN-200	CMSN-250	CMSN-300
44	12034545		VENTIL.EVAPOR.5W S/ARO S/PATAS	5W EVAPORATOR FAN MOTOR WO RING WO LEGS	1	1	1	1	1	1	1	1	1	1	1	1
45	12074526		SOP.EVAP.MESAS EVAP.COMPACTO	COUNTERS COMPACT EVAPORATOR SUPPORT	1	1	1	1	1	1	1	1	1	1		
45	12074541		TAPA EVAPORADOR MESAS	COUNTERS EVAPORATOR COVER											1	1
46	12074525		CUBRER.BAT.6T4R300A6S EVAP.COM	6T4R300A6S COMPACT EVAPORATOR COVER	1	1	1	1	1	1	1	1	1	1		
46	12069804		PLETINA FIJC.RESTC.EVAPORADOR	EVAPORATOR HEATER SUPPORT											1	1
47	12037375		CANALIZAD.AGUA 150 GRIS REFRIG	REFRIGERATION GREY 150 WATER DRAINAGE	1	1	1	1	1	1	1	1				
47	12037314		CANALIZ AGUA 150 NEGRO CONG	FREEZER BLACK 150 WATER DRAINAGE									1	1	1	1
50	12037728		SOPORT.PARRILA 3NIVELES	3 LEVELS GRILL SUPPORT	8	12	16	20	8	12	16	20	8	12	16	20
51	12034975		PARRIL.405X460 EXTREM.MSP	MSP 405X460 SIDE GRILL	2	2	2	2	2	2	2	2	2	2	2	2
51	12034847		PARRIL 405X525 CENTRO MSP	MSP 405X525 MIDDLE GRILL		1	2	3		1	2	3		1	2	3
60	12036793		REJ.RESP.GRUPO 387X280POLICARB	POLICARBONATE 387X280 COLD UNIT BACK GRID	1	1	1	1	1	1	1	1	1	1	1	1
61	12036805		MANG 3X1X2500 BL. SCHUKO 3T	3X1X2500 WHITE SCHUKO 3T HOSE	1	1	1	1	1	1	1	1				
61	12036517		MANG 3X1.5X2500 BL.SCHUKO 3T	3X1.5X2500 WHITE SCHUKO 3T HOSE									1	1	1	1
62	12073795		PROT SONDA 175x49	175X49 PROBE PROTECTOR	1	1	1	1	1	1	1	1	1	1	1	1
70	12033454		CONDEN.ARRANQUE FR-117U5015 80 mF	FR-117U50515 80 Mf START CAPACITOR	1	1			1	1			1	1	1	1
70	12040120		CONDENSADOR COMP. NEK 6210Z	NEK 6210Z COMPRESSOR CONDENSER			1	1			1	1				
71	12058829		RELE ARRANQ COMPRESOR	COMPRESSOR STARTER RELAY	1				1							
71	12058917		RELE ARRANQ NL-8.4-MF 117U6016	RELAY ARRANQUE NL-8.4-MF 117U6016		1				1						
71	12036939		RELE ARRAN. COMP. NEK 6210Z	COMPRESSOR NEK 6210Z STARTER RELAY			1	1			1	1				
71	12035096		RELE ARRANQ COMPR.SC-12CL 6005	COMPRESSOR SC-12CL 6005 STARTER RELAY									1			
71	12034983		RELE ARRANQ COMPR.SC-15CL 6019	COMPRESSOR SC-15CL 6019 STARTER RELAY										1	1	
80	12036344		RESIST.MARCO SNACK-1, 21W	21W SNACK 1 FRAME HEATER									1	1	1	1

MESAS SNACK CONCEPT / SNACK TABLES CONCEPT

FAGOR

- CMSP-150 19029276 / CMSN-150 19029376
- CMSP-200 19029277 / CMSN-200 19029378
- CMSP-250 19029279 / CMSN-250 19029400
- CMSP-300 19029291 / CMSN-300 19029404

Versión 2015-01

Nº	CODE CÓDIGO	RECOM.	DESCRIPCIÓN	DESCRIPTION	CMSP-150	CMSP-200	CMSP-250	CMSP-300	CMSP-150 F	CMSP-200 F	CMSP-250 F	CMSP-300 F	CMSN-150	CMSN-200	CMSN-250	CMSN-300
81	12036157		RESIST.MARCO SNACK-2, 21W	21W SNACK 2 FRAME HEATER									1	2	3	4
82	12034637		RESIST.BLIND.FC61-71 350W 1000	FC61-71 350W 1000 HEATER									1	1		
82	12045816		RESIST.BLIND. 350W 220V	350W 220V HEATER											1	1
83	12036313		RESIST.BANDEJA 700-20W	700-20W TRAY HEATER									1	1	1	1

MESAS SNACK CONCEPT / SNACK TABLES CONCEPT

CMSP-150 PC 19029304 / CMSP-150 HD, HH

CMSP-200 PC 19029305 / CMSP-200 HDD, HHD, HHH

CMSP-250 PC 19029306 / CMSP-250 HDDD, HHDD, HHHD, HHHH

Versión 2015-01

Nº	CODE CÓDIGO	RECOM.	DESCRIPCIÓN	DESCRIPTION	CMSP-150 PC	CMSP-200 PC	CMSP-250 PC	CMSP-150 HD	CMSP-150 HH	CMSP-200 HDD	CMSP-200 HHD	CMSP-200 HHH	CMSP-250 HDDD	CMSP-250 HHDD	CMSP-250 HHHD	CMSP-250 HHHH
1	12037489		DESAG COMPL 3/4 GRIS+TUERCA	COMPLETE DRAINAGE 3/4 GREY + NUT	1	1	1	1	1	1	1	1	1	1	1	1
2	12037989		TAPON DESAGÜE DE 3/4 CIEGO	3/4 BLIND LIP DRAINAGE	1	1	1	1	1	1	1	1	1	1	1	1
3	12037891		JUNTA GOMA DESAGÜE 3/4	3/4 DRAINAGE JOINT RUBBER	1	1	1	1	1	1	1	1	1	1	1	1
4	12038191		ENCIM.MSP-150 PETO	MSP-150 TOP WITH SPLASH BACK	1			1	1							
4	12038193		ENCIM.MSP-200 PETO	MSP-200 TOP WITH SPLASH BACK		1				1	1	1				
4	12026967		ENCIM.MSP-250 PETO	MSP-250 TOP WITH SPLASH BACK			1						1	1	1	1
5	12074344		PROT.TRAS.ENC.MSP-150	MSP-150 TOP BACK PROTECTOR	1			1	1							
5	12074345		PROT.TRAS.ENC.MSP-200	MSP-200 TOP BACK PROTECTOR		1	1			1	1	1	1	1	1	1
5	12074346		SUP. PROT. TRAS. ENC. MSP	MSP TOP BACK UPPER PROTECTOR			1						1	1	1	1
6	12036012		JUEGO TAPETAS ENCIM.ZAMAK	TOP ZAMAK SET	1	1	1	1	1	1	1	1	1	1	1	1
9	12033566		PATA REGULAB ARM GASTRO	GASTRO CABINET ADJUSTABLE LEG	4	4	6	4	4	4	4	4	6	6	6	6
10	12043342		PUE MSP/MSN AP. IZDA CONCEPT	CONCEPT LEFT OPEN MSP/MSN DOOR				1		2	1		3	2	1	
11	12035412		BURLETE PUERTA MSP	MSP GASKET DOOR	2	3	4	1		2	1		3	2	1	
12	12037723		CAJA ALOJAMIENTO MUELLE GRIS	GREY SPRING HOUSING BOX	2	3	4	1		2	1		3	2	1	
13	12038130		BIS.TRS1D DOBL MUELLE DV-2608	DOUBLE SPRING HINGE TRS1D DV-2608	2	3	4	1		2	1		3	2	1	
14	12036986		SOP.BISAG.INF.IZD.	LEFT LOW HINGE SUPPORT	2	3	4	1		2	1		3	2	1	
15	12037138		EJE ROSCA EXT.30X10INOX MESAS	COUNTERS EXTERIOR THREAD AXIS 30X10STAINLESS	3	4	5	2		3	2		4	3	2	
16	12050272		TUERC.RAPIDA TRT M6-2	FAST NUT TRT M6-2	3	4	5	2		3	2		4	3	2	
17	12033966		SOPOR.SUP.PUERTAS MSP-150	MSP-150 DOOR UPPER SUPPORT	1			1	1							
17	12033254		SOP.SUP.PUER.MSP20-25-30	MSP20-25-30 DOOR UPPER SUPPORT		1	1			1	1	1	1	1	1	1
17	12035853		SOP.SUP.PUERT.MSP-250	MSP-250 DOOR UPPER SUPPORT			1						1	1	1	1
20	12111098		REJILLA GRUPO MESAS FAGOR CONCEPT	FAGOR CONCEPT COUNTERS CONTROL PANEL	1	1	1	1	1	1	1	1	1	1	1	1
21	12074402		PROTECCION POWER COMPACT MESAS	COUNTERS POWER COMPACT PROTECTOR	1	1	1	1	1	1	1	1	1	1	1	1
22	12037372		SOPORTE ZAMAK GIRO REJILLA	CONTROL PANEL ZAMAK SUPPORT	1	1	1	1	1	1	1	1	1	1	1	1
23	12045530		SONDA TERMOSTATO	THERMOSTAT PROBE	1	1	1	1	1	1	1	1	1	1	1	1

MESAS SNACK CONCEPT / SNACK TABLES CONCEPT

CMSP-150 PC 19029304 / CMSP-150 HD, HH

CMSP-200 PC 19029305 / CMSP-200 HDD, HHD, HHH

CMSP-250 PC 19029306 / CMSP-250 HDDD, HHDD, HHHD, HHHH

Versión 2015-01

Nº	CODE CÓDIGO	RECOM.	DESCRIPCIÓN	DESCRIPTION	CMSP-150 PC	CMSP-200 PC	CMSP-250 PC	CMSP-150 HD	CMSP-150 HH	CMSP-200 HDD	CMSP-200 HHD	CMSP-200 HHH	CMSP-250 HDDD	CMSP-250 HHDD	CMSP-250 HHHD	CMSP-250 HHHH
24	12104752		ADHESIVO G. CONCEPT PWC	PWC CONCEPT RANGE STICKER	1	1	1	1	1	1	1	1	1	1	1	1
26	12043611		TERMOSTATO POWER COMPAC REFRIG	REFRIGERATION POWER COMPACT THERMOSTAT	1	1	1	1	1	1	1	1	1	1	1	1
30	12059155		COMPR. NL6.1MF 105G6660	COMPR. NL6.1MF 105G6660	1			1	1							
30	12059154		COMPR. NL7.3MF 105G6772	COMPRES.NL7.3MF 105G6772		1				1	1	1				
30	12046754		COMP.NEK6210Z EMBRACO	COMP.NEK6210Z EMBRACO			1						1	1	1	1
31	12032903		CONDENSADOR 9x2	9X2 CONDENSER	1	1		1	1	1	1	1				
31	12032340		CONDENSADOR 9x3 FAGC0021	FAGC0021 9X3 CONDENSER			1						1	1	1	1
32	12033477		VENTILADOR 10W PATA PALA 220V	10W 220V MOTOR WITH LEG AND FAN	1	1	1	1	1	1	1	1	1	1	1	1
33	12037369		VALVULA OBUS COMPLETA RF.HB-1S	OBUS VALVE RF.HB-1S	1	1	1	1	1	1	1	1	1	1	1	1
34	12036970		FILTRO DESHIDRAT.40GR 1/4X1/4	DEHYDRATOR FILTER 40G 1/4X1/4	1	1	1	1	1	1	1	1	1	1	1	1
35	12072918		EVAP.AUT.MESAS CONCEPT	CONCEPT COUNTER AUTOMATIC EVAPORATION	1	1	1	1	1	1	1	1	1	1	1	1
36	12036623		BANDEJA EVAPORACION AUTOMÁTICA	AUTOMATIC EVAPORATION PAN	1	1	1	1	1	1	1	1	1	1	1	1
40	12030989		UD.EV.MSP150,200,135,180 COMP.	MSP150,200,135,180 EVAPORATION UNIT	1	1		1	1	1	1	1				
40	12079625		UD.EV. MSP250,300,225,270 COMP	MSP250,300,225,270 EVAPORATION UNIT			1						1	1	1	1
41	12041888		BAT.5T4R300A4S PINT.MESAS	COUNTERS PAINTED 5T4R300A4S EVAPORATOR	1	1		1	1	1	1	1				
41	12049149		BAT 6T4R300A4S PINT.MESAS	COUNTERS PAINTED 6T4R300A4S EVAPORATOR			1						1	1	1	1
42	12040457		SUJ.VENTIL.MSP-150,200 COMPACT	COMPACT MSP-150,200 FAN SUPPORT	1	1	1	1	1	1	1	1	1	1	1	1
43	12034663		REJILLA VENT.D.246 PINTADA	PAINTED D246MM FAN GRID	1	1	1	1	1	1	1	1	1	1	1	1
44	12034545		VENTIL.EVAPOR.5W S/ARO S/PATAS	5W EVAPORATOR FAN MOTOR WO RING WO LEGS	1	1	1	1	1	1	1	1	1	1	1	1
45	12074526		SOP.EVAP.MESAS EVAP.COMPACTO	COUNTERS COMPACT EVAPORATOR SUPPORT	1	1	1	1	1	1	1	1	1	1	1	1
46	12074525		CUBRER.BAT.6T4R300A6S EVAP.COM	6T4R300A6S COMPACT EVAPORATOR COVER	1	1	1	1	1	1	1	1	1	1	1	1
47	12037375		CANALIZAD.AGUA 150 GRIS REFRIG	REFRIGERATION GREY 150 WATER DRAINAGE	1	1	1	1	1	1	1	1	1	1	1	1
50	12037728		SOPORT.PARRILA 3NIVELES	3 LEVELS GRILL SUPPORT	8	12	16	4		8	4		12	8	4	
51	12034975		PARRIL.405X460 EXTREM.MSP	MSP 405X460 SIDE GRILL	2	2	2	1		1	1		1	1	1	
51	12034847		PARRIL 405X525 CENTRO MSP	MSP 405X525 MIDDLE GRILL		1	2			1			2	1		

MESAS SNACK CONCEPT / SNACK TABLES CONCEPT

CMSP-150 PC 19029304 / CMSP-150 HD, HH

CMSP-200 PC 19029305 / CMSP-200 HDD, HHD, HHH

CMSP-250 PC 19029306 / CMSP-250 HDDD, HHDD, HHHD, HHHH

Versión 2015-01

Nº	CODE CÓDIGO	RECOM.	DESCRIPCIÓN	DESCRIPTION	CMSP-150 PC	CMSP-200 PC	CMSP-250 PC	CMSP-150 HD	CMSP-150 HH	CMSP-200 HDD	CMSP-200 HHD	CMSP-200 HHH	CMSP-250 HDDD	CMSP-250 HHDD	CMSP-250 HHHD	CMSP-250 HHHH
60	12036793		REJ.RESP.GRUPO 387X280POLICARB	POLICARBONATE 387X280 COLD UNIT BACK GRID	1	1	1	1	1	1	1	1	1	1	1	1
61	12036805		MANG 3X1X2500 BL. SCHUKO 3T	3X1X2500 WHITE SCHUKO 3T HOSE	1	1	1	1	1	1	1	1	1	1	1	1
62	12073795		PROT SONDA 175x49	175X49 PROBE PROTECTOR	1	1	1	1	1	1	1	1	1	1	1	1
63	12068289		TIRAD.PT.CRISTAL FAGOR PX770	FAGOR PX770 GLASS DOOR HANDLE	2	3	4									
64	12046298		PT.CRIST.MESA SNACK IZQ.FAGOR	FAGOR SNACK COUNTER LEFT GLASS DOOR	2	3	4									
65	12117149		TIRA LED T3-270-3014-868.16-CW24V DC 2mt	T3-270-3014-868.16-CW24V DC 2mt LED STRIP	2	3	4									
66	12103609		FUENT APV-16-24 115-230 50/60Hz 24V 16W	APV-16-24 115-230 50/60Hz 24V 16W SOURCE	1	1	1									
70	12033454		CONDEN.ARRANQUE FR-117U5015 80 mF	FR-117U50515 80 Mf START CAPACITOR	1	1		1	1	1	1	1				
70	12040120		CONDENSADOR COMP. NEK 6210Z	NEK 6210Z COMPRESSOR CONDENSER			1						1	1	1	1
71	12058829		RELE ARRANQ COMPRESOR	COMPRESSOR STARTER RELAY	1			1	1							
71	12058917		RELE ARRANQ NL-8.4-MF 117U6016	RELAY ARRANQUE NL-8.4-MF 117U6016		1				1	1	1				
71	12036939		RELE ARRAN. COMP. NEK 6210Z	COMPRESSOR NEK 6210Z STARTER RELAY			1						1	1	1	1
90	12084977		FRONTI POSTIZO MSP CAJ MAGNETI	MSP MAGNETIC BOX FRONT PANEL				1	2	1	2	3	1	2	3	4
91	12068305		GUIA ACERO LONGT.450 (JUEGO)	450 LENGTH STEEL GUIDE SET				2	4	2	4	6	2	4	6	8
92	12032484		CAJON SNACK 1/2 190 prof	190 DEPTH 1/2 SNACK DRAWER				2	3	2	4	5	2	4	6	7
92	12033405		CAJON SNACK 1/3 90 prof.	90 DEPTH 1/3 SNACK DRAWER					1			1				1
93	12085255		FRENTE CAJON MSP 1/2 CONCEPT	1/2 FRONT MSP CONCEPT DRAWER				2	4	2	4	6	2	4	6	8
94	12035824		BURLET 469x270 CAJ.1/2 MSP2006	MSP2006 469X270 DRAWER GASKET				2	4	2	4	6	2	4	6	8

MESAS SNACK CONCEPT / SNACK TABLES CONCEPT

CMSP-117-R 19029294 / CMSN-117-R 19029406

CMSP-169-R 19029295 / CMSN-169-R 19029407

CMSP-222-R 19029296 / CMSN-222-R 19029408

CMSP-274-R 19029297 /

Versión 2015-01

Nº	CODE CÓDIGO	RECOM.	DESCRIPCIÓN	DESCRIPTION	CMSP-117-R	CMSP-169-R	CMSP-222-R	CMSP-274-R	CMSN-117-R	CMSN-169-R	CMSN-222-R
1	12037489		DESAG COMPL 3/4 GRIS+TUERCA	COMPLETE DRAINAGE 3/4 GREY + NUT	1	1	1	1	1	1	1
2	12037989		TAPON DESAGÜE DE 3/4 CIEGO	3/4 BLIND LIP DRAINAGE	1	1	1	1	1	1	1
3	12037891		JUNTA GOMA DESAGÜE 3/4	3/4 DRAINAGE JOINT RUBBER	1	1	1	1	1	1	1
4	12028326		ENCIM.MSP-117-R C/PETO	MSP-117-R TOP WITH SPLASH BACK	1				1		
4	12027889		ENCIM.MSP-169-R C/PETO	MSP-169-R TOP WITH SPLASH BACK		1				1	
4	12027039		ENCIM.MSP-222-R C/PETO	MSP-222-R TOP WITH SPLASH BACK			1				1
4	12027109		ENCIM.MSP-274-R C/PETO	MSP-274-R TOP WITH SPLASH BACK				1			
5	12074346		SUP. PROT. TRAS. ENC. MSP	MSP TOP BACK UPPER PROTECTOR			1	1			1
5	12074348		PROT.TRAS.ENC.MSP-117	MSP-117 TOP BACK PROTECTOR	1				1		
5	12074349		PROT.TRAS.ENC.MSP-169	MSP-169 TOP BACK PROTECTOR		1	1	1		1	1
6	12036012		JUEGO TAPETAS ENCIM.ZAMAK	TOP ZAMAK SET	1	1	1	1	1	1	1
9	12033566		PATA REGULAB ARM GASTRO	GASTRO CABINET ADJUSTABLE LEG	4	4	6	6	4	4	6
10	12043342		PUE MSP/MSN AP. IZDA CONCEPT	CONCEPT LEFT OPEN MSP/MSN DOOR	2	3	4	5	2	3	4
11	12035412		BURLETE PUERTA MSP	MSP GASKET DOOR	2	3	4	5	2	3	4
12	12037723		CAJA ALOJAMIENTO MUELLE GRIS	GREY SPRING HOUSING BOX	2	3	4	5	2	3	4
13	12038130		BIS.TRS1D DOBL MUELLE DV-2608	DOUBLE SPRING HINGE TRS1D DV-2608	2	3	4	5	2	3	4
14	12036986		SOP.BISAG.INF.IZD.	LEFT LOW HINGE SUPPORT	2	3	4	5	2	3	4
15	12037138		EJE ROSCA EXT.30X10INOX MESAS	COUNTERS EXTERIOR THREAD AXIS 30X10STAINL	3	4	5	6	3	4	5
16	12050272		TUERC.RAPIDA TRT M6-2	FAST NUT TRT M6-2	3	4	5	6	3	4	5
17	12034827		SOP.SUP.PUERTAS MSP-117-R	MSP-117-R DOOR UPPER SUPPORT	1				1		

MESAS SNACK CONCEPT / SNACK TABLES CONCEPT

- CMSP-117-R 19029294 / CMSN-117-R 19029406
- CMSP-169-R 19029295 / CMSN-169-R 19029407
- CMSP-222-R 19029296 / CMSN-222-R 19029408
- CMSP-274-R 19029297 /

Versión 2015-01

Nº	CODE CÓDIGO	RECOM.	DESCRIPCIÓN	DESCRIPTION	CMSP-117-R	CMSP-169-R	CMSP-222-R	CMSP-274-R	CMSN-117-R	CMSN-169-R	CMSN-222-R
17	12033641		SOP.SUP.PUERTAS MSP-169-R	MSP-169-R DOOR UPPER SUPPORT		1				1	
17	12035903		SOPORT.SUP.PUER.MSP-222-R	MSP-222-R DOOR UPPER SUPPORT			1				1
17	12034881		SOP.SUP.PUERTAS MSP-274-R	MSP-274-R DOOR UPPER SUPPORT				1			
20	12047552		CUADRO MANDOS REMOTO CONCEPT	REMOTE CONCEPT CONTROL PANEL	1	1	1	1	1	1	1
23	12045530		SONDA TERMOSTATO	THERMOSTAT PROBE	1	1	1	1	2	2	2
24	12113735		ADHESIVO G. CONCEPT REMOTA	REMOTE CONCEPT STICKER	1	1	1	1	1	1	1
25	12047553		INT. BIP. O/I NEGRO/ROJO	O/I BLACK/RED BIPOLAR SWITCH	1	1	1	1	1	1	1
26	12084202		CONJ.TERM.REFR.220V50HZ+1 SOND	REFRIGERATION THERMOSTAT SET 220V50HZ + 1 PROI	1	1	1	1			
26	12045485		CONJ.TERM.CONG.220V50HZ+2 SOND	FREEZER THERMOSTAT SET 220V50HZ + 2 PROBES					1	1	1
27	12047554		PILOTO RECTANGULAR ROJO LUZ	SQUARED RED LIGHT SWITCH	1	1	1	1	1	1	1
40	12045486		UD.EV. MSP-117,102,169-R COMP.	MSP-117,102,169-R EVAPORATOR UNIT	1	1					
40	12085357		EV.MSP-222,274	MSP-222,274 EVAPORATOR			1	1			
40	12085398		UD.EV. MSN/MPN-250,300	MSN/MPN-250,300 EVAPORATION UNIT							1
40	12085360		UD.EV.MSN-117,102,169-R COMPAC	MSN-117,102,169-R EVAPORATION UNIT					1	1	
41	12041888		BAT.5T4R300A4S PINT.MESAS	COUNTERS PAINTED 5T4R300A4S EVAPORATOR	1	1					
41	12049149		BAT 6T4R300A4S PINT.MESAS	COUNTERS PAINTED 6T4R300A4S EVAPORATOR			1	1			
41	12044662		BAT.6T4R300A6S PINTADO.MESAS	COUNTERS PAINTED 6T4R300A6S EVAPORATOR					1	1	
41	12045174		EV. FC71B RH, 7T4R295A6S PINT.	PAINTED FC71B RH, 7T4R295A6S EVAPORATOR							1
42	12040457		SUJ.VENTIL.MSP-150,200 COMPACT	COMPACT MSP-150,200 FAN SUPPORT	1	1	1	1	1	1	
42	12074540		TECHO EVAP.MESAS/ARMARIOS	COUNTERS/CABINETS EVAPORATOR CEILING							1

MESAS SNACK CONCEPT / SNACK TABLES CONCEPT

- CMSP-117-R 19029294 / CMSN-117-R 19029406
- CMSP-169-R 19029295 / CMSN-169-R 19029407
- CMSP-222-R 19029296 / CMSN-222-R 19029408
- CMSP-274-R 19029297 /

Versión 2015-01

Nº	CODE CÓDIGO	RECOM.	DESCRIPCIÓN	DESCRIPTION	CMSP-117-R	CMSP-169-R	CMSP-222-R	CMSP-274-R	CMSN-117-R	CMSN-169-R	CMSN-222-R
43	12034663		REJILLA VENT.D.246 PINTADA	PAINTED D246MM FAN GRID	1	1	1	1	1	1	1
44	12034545		VENTIL.EVAPOR.5W S/ARO S/PATAS	5W EVAPORATOR FAN MOTOR WO RING WO LEGS	1	1	1	1	1	1	1
45	12074526		SOP.EVAP.MESAS EVAP.COMPACTO	COUNTERS COMPACT EVAPORATOR SUPPORT	1	1	1	1	1	1	
45	12074541		TAPA EVAPORADOR MESAS	COUNTERS EVAPORATOR COVER							1
46	12074525		CUBRER.BAT.6T4R300A6S EVAP.COM	6T4R300A6S COMPACT EVAPORATOR COVER	1	1	1	1	1	1	
46	12069804		PLETINA FIJC.RESTC.EVAPORADOR	EVAPORATOR HEATER SUPPORT							1
47	12037375		CANALIZAD.AGUA 150 GRIS REFRIG	REFRIGERATION GREY 150 WATER DRAINAGE	1	1	1	1			
47	12037314		CANALIZ AGUA 150 NEGRO CONG	FREEZER BLACK 150 WATER DRAINAGE					1	1	1
50	12037728		SOPORT.PARRILA 3NIVELES	3 LEVELS GRILL SUPPORT	8	12	16	20	8	12	16
51	12034975		PARRIL.405X460 EXTREM.MSP	MSP 405X460 SIDE GRILL	2	2	2	2	2	2	2
51	12034847		PARRIL 405X525 CENTRO MSP	MSP 405X525 MIDDLE GRILL		1	2	3		1	2
61	12036805		MANG 3X1X2500 BL. SCHUKO 3T	3X1X2500 WHITE SCHUKO 3T HOSE	1	1	1	1			
61	12036517		MANG 3X1.5X2500 BL.SCHUKO 3T	3X1.5X2500 WHITE SCHUKO 3T HOSE					1	1	1
62	12073795		PROT SONDA 175x49	175X49 PROBE PROTECTOR	1	1	1	1	1	1	1
80	12036344		RESIST.MARCO SNACK-1, 21W	21W SNACK 1 FRAME HEATER					1	1	1
81	12036157		RESIST.MARCO SNACK-2, 21W	21W SNACK 2 FRAME HEATER					1	2	3
82	12034637		RESIST.BLIND.FC61-71 350W 1000	FC61-71 350W 1000 HEATER					1	1	
82	12045816		RESIST.BLIND. 350W 220V	350W 220V HEATER							1
83	12036313		RESIST.BANDEJA 700-20W	700-20W TRAY HEATER					1	1	1