SD 210

R 22 A VERSION

SPARE PARTS LIST
CATALOGORIAMBI
CATALOGUE PIÈCES DÉTACHÉES
ERSATZTEILENKATALOG

REV. 01/1991

SD210 - SD210W

01 - 91

TAVOLA 1

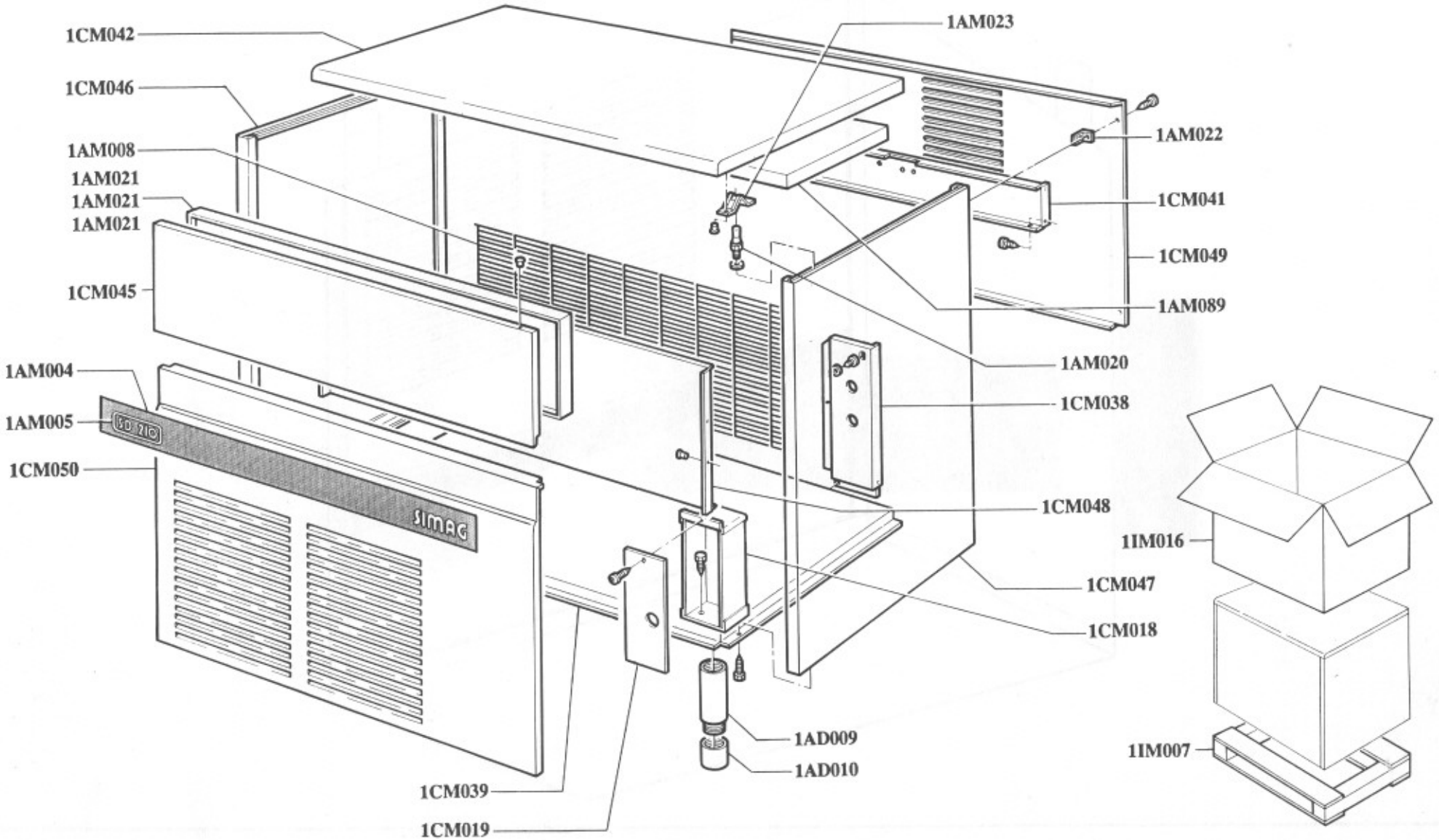

SD210 - SD210W

01 - 91

TAVOLA 1

COD.	DESCRIZIONE	DENOMINATION	DESCRIPTION	BESCHREIBUNG	DESCRIPCION
1AD009	Piede di supporto	*Pied*	Foot	*Gerätefuss*	Pie soporte
1AD010	Piede regolabile	*Pied réglable*	Levelling foot	*Gerätefuss*	Pie regulable
1AM004	Targa serigrafata	*Plaquette marque*	Name plate facia	*Markenschild*	Banda Simag
1AM005	Targhetta modello	*Plaquette d'identification*	Model badge	*Modellbezeichnung*	Etiqueta modelo
1AM008	Griglia posteriore	*Grille postérieure*	Rear grill	*Hinteres Belüftungssgitter*	Rejilla posterior
1AM020	Perno	*Axe*	Stud	*Stift*	Perno
1AM021	Controsportello	*Contreporte*	Door internal plate	*Hintere Seite Entnahmeklappe*	Contrapuerta
1AM022	Piastrine angolari	*Plaquette angulaires*	Retaining bracket	*Eckhalterung*	Ángulo
1AM023	Molla	*Ressort*	Retainer	*Feder*	Pinza perno
1AM089	Pannello isolante	*Panneau isolant*	Top panel insulation	*Isolierung*	Panel aislamiento
1CM018	Scatola elettrica	*Boîtier électrique*	Electrical box	*Schaltkasten*	Caja eléctrica
1CM019	Coperchio sc. elettrica	*Couvercle boîtier elec.*	Cover electrical box	*Deckel Schaltkasten*	Tapa caja eléctrica
1CM038	Supporto scarico	*Support vidange*	Exhaust support	*Auslaufhalterung*	Soporte conexiones
1CM039	Piastra di base	*Plaque de base*	Base	*Grundplatte*	Base
1CM041	Traverso supp. pompa	*Traverse support pompe*	Pump support panel	*Halterung Pumpe*	Soporte sup. bomba
1CM042	Coperchio	*Couvercle*	Top panel	*Deckel*	Tapa superior
1CM045	Sportello	*Porte*	Door	*Entnahmeklappe*	Puerta
1CM046	Fiancata sinistra	*Joue gauche*	Left side panel	*Linke Gehäuseseite*	Lateral izquierdo
1CM047	Fiancata destra	*Joue droite*	Right side panel	*Rechte Gehäuseseite*	Lateral derecho
1CM048	Traverso anteriore	*Traverse antérieure*	Front support	*Vordere Verbindungsstrebe*	Soporte frontal
1CM049	Pannello posteriore	*Panneau postérieur*	Rear panel	*Hintere Abdeckung*	Panel posterior
1CM050	Pannello anteriore	*Panneau frontal*	Front panel	*Vordere Gehäuseabdeckung*	Panel frontal
1IM007	Base imballo	*Socle*	Pallet	*Palette*	Palet
1IM016	Scatola imballo	*Caisse carton*	Carton	*Karton*	Embalaje

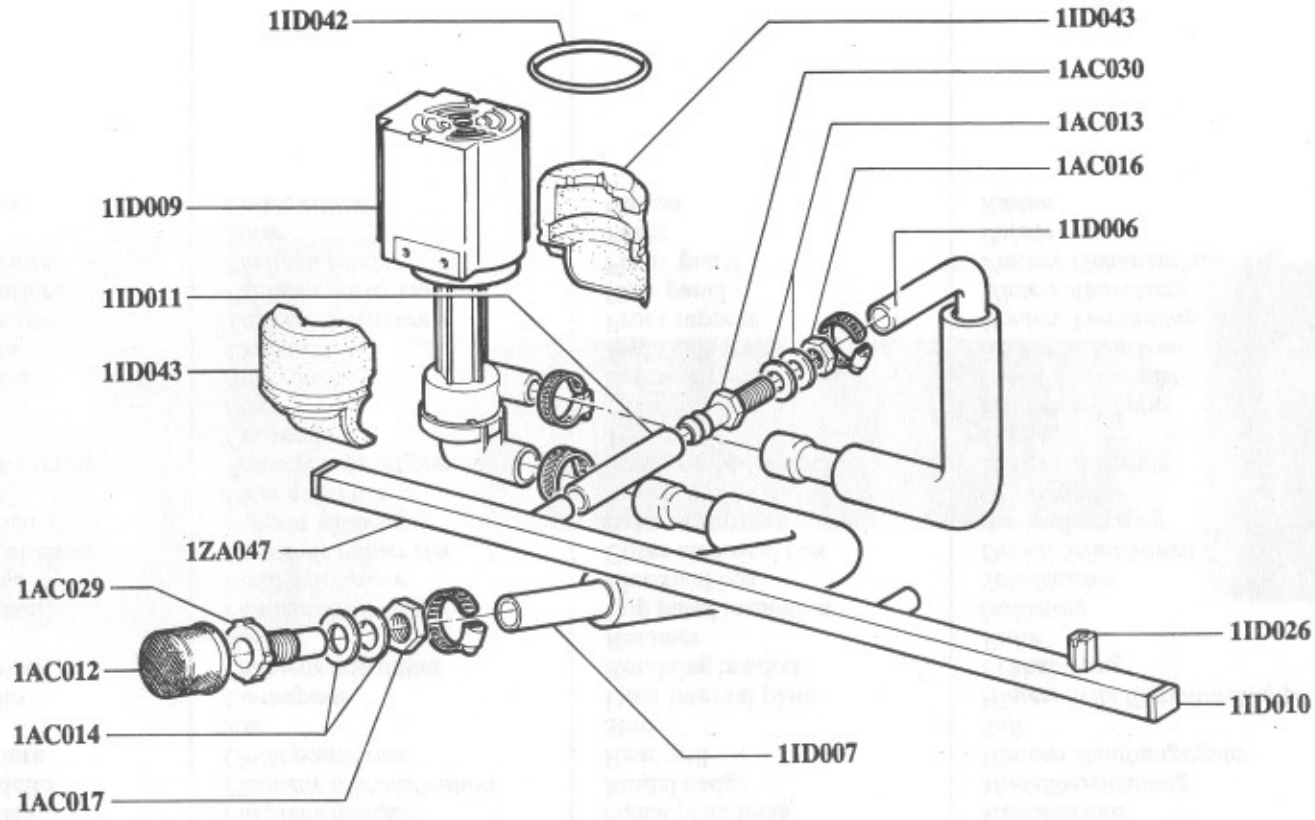
1ID042
1ID043
1AC030
1AC013
1AC016
1ID009
1ID006
1ID011
1ID043
1ZA047
1AC029
1ID026
1AC012
1ID010
1AC014
1ID007
1AC017

SD210 - SD210W

01 - 91

TAVOLA 2

COD.	DESCRIZIONE	DENOMINATION	DESCRIPTION	BESCHREIBUNG	DESCRIPCION
1AC012	Filtro aspirazione pompa	*Filtre aspiration pompe*	Pump feeding filter	*Pumpenansaugfilter*	Filtro asp. bomba
1AC013	Rondella	*Rondelle*	Washer	*Unterlegscheibe*	Arandela
1AC014	Rondella	*Rondelle*	Washer	*Unterlegscheibe*	Arandela
1AC016	Dado	*Ecrou*	Nut	*Mutter*	Tuerca
1AC017	Dado	*Ecrou*	Nut	*Mutter*	Tuerca
1AC029	Racc. aspirazione pompa	*Raccord aspiration pompe*	Pump feeding pipe-fixing	*Ansauganschlusstück*	Racord asp. bomba
1AC030	Racc. mandata pompa	*Raccord refoulement pompe*	Pump inlet water pipe-fixing	*Pumpenabflussanschlusstück*	Racord. imp. bomba
1ID006	Tubo mandata pompa	*Tuyau de refoulement pompe*	Pump inlet water pipe	*Pumpenabflusschlauch*	Tubo impul. bomba
1ID007	Tubo aspirazione pompa	*Tuyau d'aspiration pompe*	Pump feeding pipe	*Pumpenansaugschlauch*	Tubo asp. bomba
1ID009	Pompa	*Pompe*	Pump	*Pumpe*	Bomba
1ID010	Tappo per collettore	*Bouchon pour collecteur*	Plug manifold	*Stopfen*	Tapón colector
1ID011	Tubo alimentazione collettore	*Tuyau d'alimentation eau*	Spray bar feeding pipe	*Anschlusschlauch Kollektor*	Tubo aliment. dist.
1ID026	Spruzzatore	*Gicleurs*	Sprayers	*Sprühdüsen*	Aspersores
1ID042	Anello O.R.	*Joint torique*	O-ring	*O-ring*	Junta
1ID043	Isolamento pompa	*Coupelle pour pompe*	Pump cover insulation	*Pumpenisolierung*	Aislamiento bomba
1ZA047	Collettore	*Collecteur*	Spray bar	*Kollektor*	Colector

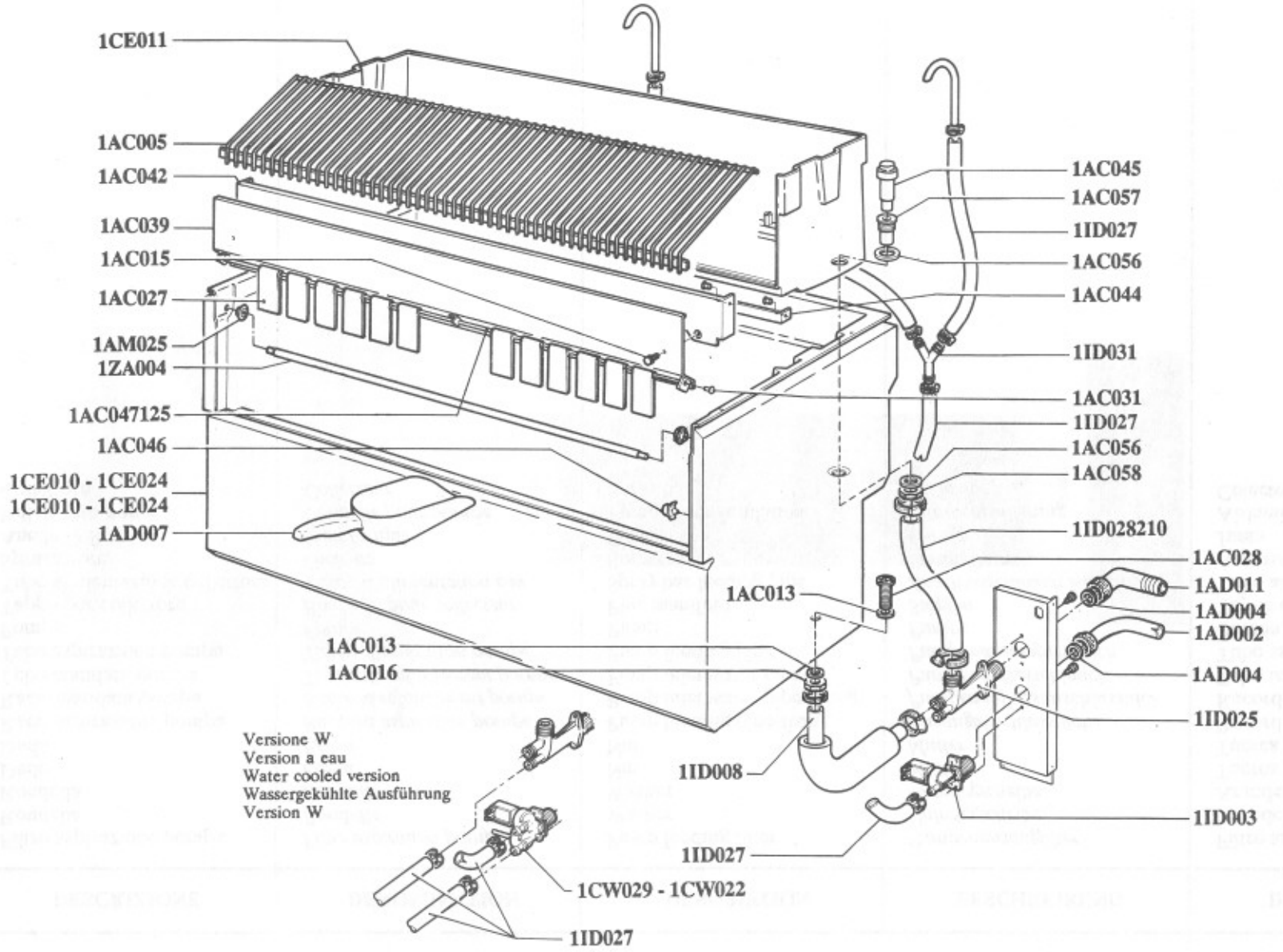
1CE011
1AC005
1AC042
1AC039
1AC015
1AC027
1AM025
1ZA004
1AC047125
1AC046
1CE010 - 1CE024
1CE010 - 1CE024
1AD007
1AC045
1AC057
1ID027
1AC056
1AC044
1ID031
1AC031
1ID027
1AC056
1AC058
1ID028210
1AC028
1AD011
1AD004
1AD002
1AD004
1ID025
1ID003
1AC013
1AC013
1AC016
1ID008
1ID027
1CW029 - 1CW022
1ID027
Versione W
Version a eau
Water cooled version
Wassergekühlte Ausführung
Version W

SD210 - SD210W

01 - 91

TAVOLA 3

COD.	DESCRIZIONE	DENOMINATION	DESCRIPTION	BESCHREIBUNG	DESCRIPCION
1AC005	Griglia scorrimento cubetti	*Grille glissement glaçons*	Cube deflector	*Abgleitgrill*	Rejilla caida cubitos
1AC013	Rondella	*Rondelle*	Washer	*Unterlegscheibe*	Arandela
1AC015	Vite godronata	*Vis moletée*	Knurled screw	*Schraube*	Tornillo
1AC016	Dado	*Ecrou*	Nut	*Mutter*	Tuerca
1AC027	Bandierina	*Lamelle*	Spray curtain flap	*Abdeckklappe*	Aleta
1AC028	Racc. scarico contenitore	*Raccord vidange conteneur*	Bin exhaust pipe fitting	*Anschlüsstück Behälter*	Racord desag. deposito
1AC031	Bottone	*Bouton*	Bar pins	*Befestigung Achse*	Tapón
1AC039	Supporto bandierine	*Support lamelles*	Spray curtain support	*Abdeckklappen Halterung*	Soporte aletas
1AC042	Supporto evaporatore	*Support évaporateur*	Evaporator support	*Verdampferauflage*	Soporte evaporador
1AC044	Supporto cella	*Support chambre*	Bin support	*Halterung Innenbehälter.*	Soporte cuba
1AC045	Troppo pieno	*Trop-plein*	Overflow exhaust pipe	*Überlauf*	Rebosadero
1AC046	Fermatubo	*Attache de tube*	Pipe fixing	*Behälterthermostat Halterung*	Fijación tubos
1AC047125	Tubo ottone	*Tube en laiton*	Spray curtain bar	*Abdeckklappenhalter*	Barra aletas
1AC056	Rondella	*Rondelle*	Washer	*Unterlegscheibe*	Arandela
1AC057	Raccordo scarico t. pieno	*Raccord écoulem. trop-plein*	Overflow exhaust	*Überlaufrohr*	Racord desag. rebosad
1AC058	Dado	*Ecrou*	Nut	*Mutter*	Tuerca
1AD002	Tubo alimentazione acqua	*Tuyau d'alimentation eau*	Water supply pipe	*Wasseranschlusschlauch*	Tubo aliment. agua
1AD004	Guarnizione	*Joint*	Gasket	*Dichtung*	Junta
1AD007	Sessola	*Sasse*	Ice scoop	*Eisschaufel*	Pala
1AD011	Curva con ghiera	*Coude avec bague*	Elbow with ring nut	*Krümmer*	Codo
1AM025	Passatubo	*Passe-tuyau*	Retainer for door bar	*Halterung*	Pasatubo
1CE010	Cella esterna	*Chambre extérieure*	Bin	*Zelle extern*	Cuba
1CE011	Cella interna	*Chambre intérieure*	Bin	*Zelle intern*	Cubeta interna
1CE024	Schiumatura cella	*Isolation chambre*	Bin insulation	*Zelle Isolierung*	Aislamiento depósito
1CW022	Regolatore	*Regolateur*	Regulator	*Regler*	Restrictor
1CW029	Elettrovalvola doppia	*Electrovanne double*	Double electric valve	*Elektroventil*	Electroválvula doble
1ID003	Elettrovalvola	*Electrovanne*	Electric valve	*Elektromagnetventil*	Electroválvula
1ID008	Tubo scarico contenitore	*Tuyau vidange conteneur*	Bin exhaust pipe	*Behälterauslaufschlauch*	Tubo desag. depósito
1ID025	Scarico acqua	*Ecoulement eau*	Water exhaust	*Wasserablauf*	Desagüe
1ID027	Tubo	*Tube*	Pipe	*Schlauch*	Tubo
1ID028210	Tubo	*Tube*	Pipe	*Schlauch*	Tubo
1ID031	Raccordo	*Raccord*	Support	*Verbindung*	Racord
1ZA004	Asta sportello	*Tige porte*	Door support bar	*Klappenachse*	Tubo soporte puerta

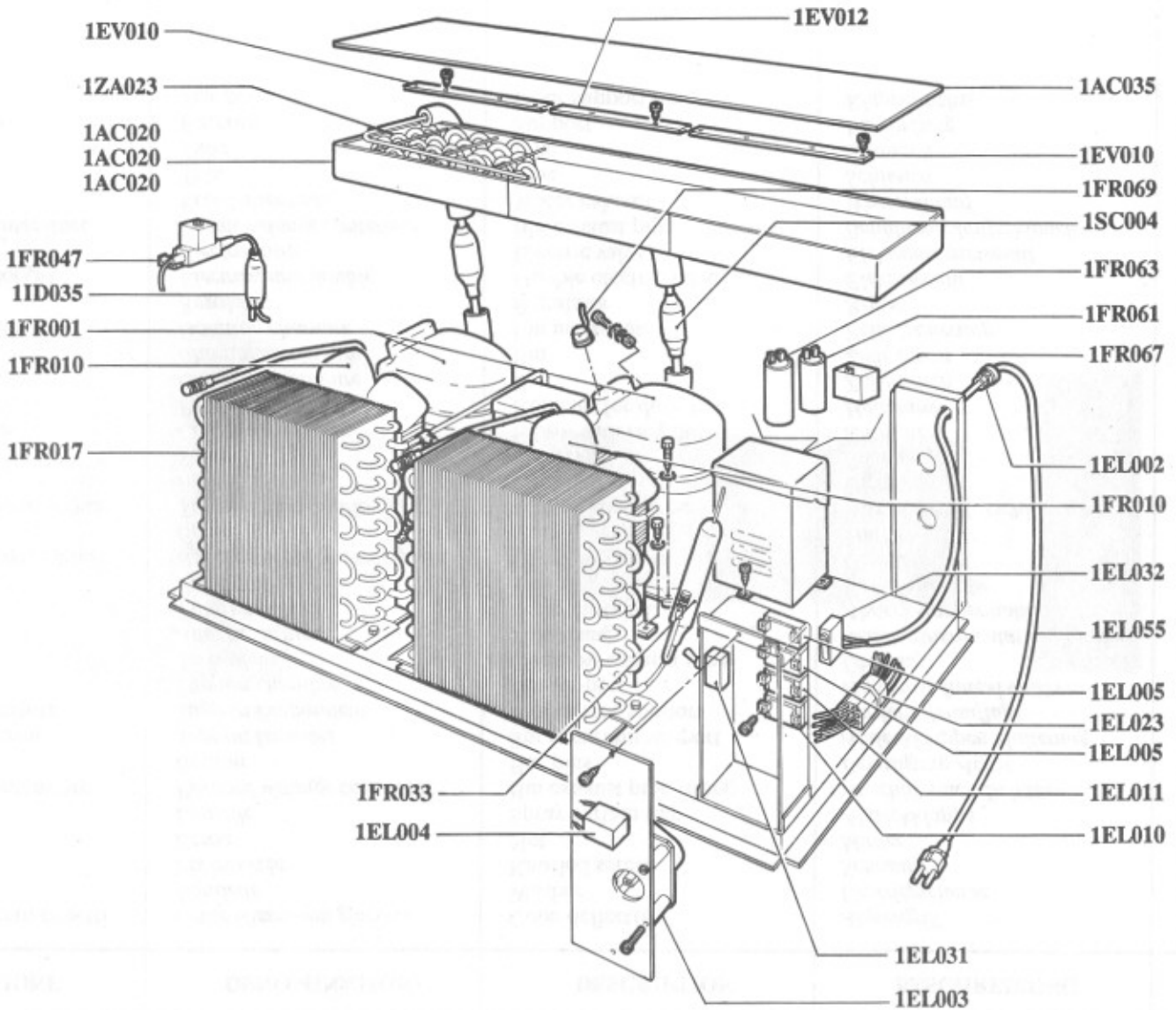
1EV012
1EV010
1AC035
1ZA023
1AC020
1AC020
1AC020
1EV010
1FR069
1SC004
1FR047
1FR063
1ID035
1FR061
1FR001
1FR067
1FR010
1EL002
1FR017
1FR010
1EL032
1EL055
1EL005
1EL023
1EL005
1FR033
1EL011
1EL004
1EL010
1EL031
1EL003

SD210				01 - 91	TAVOLA 4
COD.	**DESCRIZIONE**	**DENOMINATION**	**DESCRIPTION**	**BESCHREIBUNG**	**DESCRIPCION**
1AC020	Guarnizione evaporatore	*Joint d'évaporateur*	Evaporator packing	*Verdampferdichtung*	Bandeja evaporador
1AC035	Coprievaporatore	*Cache-évaporateur*	Evaporator top	*Verdampferabdeckung*	Tapa evaporador
1EL002	Fissacavo	*Serre-câble*	Cable terminal ring	*Kabelklemme*	Tuerca fijación cab.
1EL003	Timer	*Minuterie*	Timer	*Timer*	Temporizador
1EL004	Relè	*Relais*	Relay	*Relais*	Relé
1EL005	Pressostato	*Pressostat*	Pressure gauge	*Druckwächter*	Presostato
1EL010	Termostato contenitore	*Thermostat conteneur*	Bin thermostat	*Behälterthermostat*	Termostato depósito
1EL011	Termostato evaporatore	*Thermostat évaporateur*	Evaporator thermostat	*Verdampferthermostat*	Termostato evaporador
1EL023	Cablaggio	*Câblage*	Wiring	*Verkabelung*	Cableado
1EL031	Interruttore	*Interrupteur*	Switch	*Schalter*	Interruptor limpieza
1EL032	Interruttore luminoso	*Interrupteur lumineux*	Switch	*Schalter*	Interruptor ON/OFF
1EL055	Cavo alimentazione	*Câble d'alimentation*	Electric cable	*Kabel*	Cable alimentación
1EV010	Piastrina fiss. evaporatore	*Plaque fixation evaporat.*	Evaporat. fastening plate	*Befestigung Verdampfer*	Fijacion evaporador
1EV012	Piastrina fiss. evaporatore	*Plaque fixation evaporat.*	Evaporat. fastening plate	*Befestigung Verdampfer*	Fijacion evaporador
1FR001	Compressore	*Compresseur*	Compressor	*Kompressor*	Compresor
1FR010	Motoventilatore	*Moto-ventilateur*	Electric fan	*Lüfter*	Motoventilador
1FR017	Condensatore	*Condenseur*	Air condenser	*Kondensator*	Condensador
1FR033	Filtro	*Filtre*	Filter	*Filter*	Filtro
1FR047	Elettrovalvola gas	*Electrovanne gaz*	Gas electric valve	*Gas Elektromagnetventil*	Electroválvula gaz
1FR061	Condensatore di marcia	*Condenseur marche*	Running capacitor	*Gangkondensator*	Condensador de marcha
1FR063	Condensatore avviamento	*Condenseur depart*	Start capacitor	*Startkondensator*	Condensador de arranque
1FR067	Relè avviamento	*Relais demarrage*	Starting relay	*Anlaufrelais*	Relé arranque
1FR069	Protettore termico	*Protection thermique*	Thermic protector	*Thermoschutz*	Protector térmico
1ID035	Filtro	*Filtre*	Filter	*Filter*	Filtro
1SC004	Boiler	*Boiler*	Heat exchanger	*Austauscher*	Intercambiador
1ZA023	Evaporatore	*Evaporateur*	Evaporator	*Verdampfer*	Evaporador

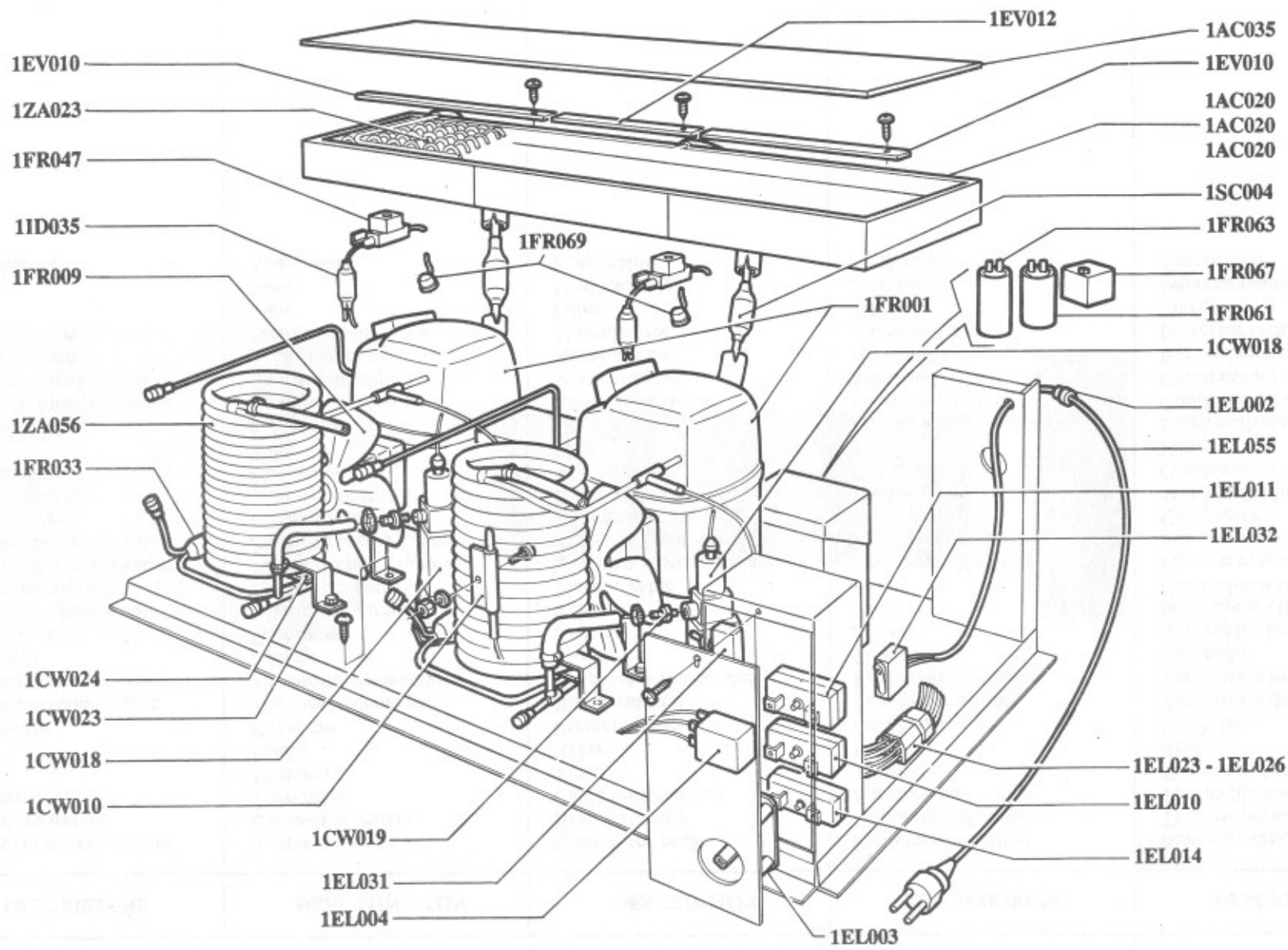
1EV012
1AC035
1EV010
1EV010
1ZA023
1AC020
1AC020
1FR047
1AC020
1SC004
1ID035
1FR063
1FR069
1FR009
1FR067
1FR001
1FR061
1CW018
1ZA056
1EL002
1FR033
1EL055
1EL011
1EL032
1CW024
1CW023
1CW018
1EL023 - 1EL026
1CW010
1EL010
1CW019
1EL014
1EL031
1EL004
1EL003

SD210W

01 - 91

TAVOLA 5

COD.	DESCRIZIONE	DENOMINATION	DESCRIPTION	BESCHREIBUNG	DESCRIPCION
1AC020	Guarnizione evaporatore	*Joint d'évaporateur*	Evaporator packing	*Verdampferdichtung*	Bandeja evaporador
1AC035	Coprievaporatore	*Cache-évaporateur*	Evaporator top	*Verdampferabdeckung*	Tapa evaporador
1CW010	Piastrina bulbo termostato	*Plaquette bulbe thermostat*	Thermostat feeler fixing	*Thermostatfühler Halterung*	Fij. bulbo termostato
1CW019	Portagomma	*Support caoutchouc*	Rubber fixing	*Halterung*	Junta de goma
1CW018	Valvola pressostatica	*Soupape pressostatique*	Water valve	*Wasserventil*	Valvula presostatica
1CW023	Squadretta fiss. condensatore	*Equerre fixation cond.*	Condenser fixing	*Verflüssiger Halterung*	Escuadra fij. cond.
1CW024	Squadretta per condensatore	*Equerre fixation cond.*	Condenser fixing	*Verflüssiger Halterung*	Escuadra fij. cond.
1EL002	Fissacavo	*Serre-câble*	Cable terminal ring	*Kabelklemme*	Tuerca fij. cab.
1EL003	Timer	*Minuterie*	Timer	*Timer*	Temporizador
1EL004	Relè	*Relais*	Relay	*Relais*	Relé
1EL010	Termostato contenitore	*Thermostat conteneur*	Bin thermostat	*Behälterthermostat*	Termostato depósito
1EL011	Termostato evaporatore	*Thermostat évaporateur*	Evaporator thermostat	*Verdampferthermostat*	Termostato evaporador
1EL014	Termostato condensazione	*Thermostat condensation*	Condenser thermostat	*Verflüssigerthermostat*	Termostato condensador
1EL023	Cablaggio	*Câblage*	Wiring	*Verkabelung*	Cableado
1EL026	Cablaggio	*Câblage*	Wiring	*Verkabelung*	Cableado
1EL031	Interruttore	*Interrupteur*	Switch	*Schalter*	Interruptor limpieza
1EL032	Interruttore luminoso	*Interrupteur lumineux*	Switch	*Schalter*	Interruptor ON/OFF
1EL055	Cavo alimentazione	*Câble d'alimentation*	Electric cable	*Kabel*	Cable alimentación
1EV010	Piastrina fiss. evaporatore	*Plaque fixation evaporat.*	Evaporat. fastening plate	*Befestigung Verdampfer*	Fijacion evaporador
1EV012	Piastrina fiss. evaporatore	*Plaque fixation evaporat.*	Evaporat. fastening plate	*Befestigung Verdampfer*	Fijacion evaporador
1FR001	Compressore	*Compresseur*	Compressor	*Kompressor*	Compresor
1FR009	Motoventilatore	*Moto-ventilateur*	Electric fan	*Lüfter*	Motoventilador
1FR033	Filtro	*Filtre*	Filter	*Filter*	Filtro
1FR047	Elettrovalvola gas	*Electrovanne gaz*	Gas valve	*Gasventil*	Electroválvula gaz
1FR061	Condensatore di marcia	*Condenseur marche*	Running capacitor	*Gangkondensator*	Condensador de marcha
1FR063	Condensatore avviamento	*Condenseur depart*	Start capacitor	*Startkondensator*	Condensador de arranque
1FR067	Relé avviamento	*Relais de démarrage*	Starting relay	*Anlaufrelais*	Relé arranque
1FR069	Protettore termico	*Protection thermique*	Thermic protector	*Thermoschutz*	Protector térmico
1ID035	Filtro meccanico	*Filtre mécanique*	Filter	*Filter*	Filtro
1SC004	Boiler	*Boiler*	Heat exchanger	*Austauscher*	Intercambiador
1ZA023	Evaporatore	*Evaporateur*	Evaporator	*Verdampfer*	Evaporador
1ZA056	Condensatore	*Condenseur*	Water condenser	*Verflussiger*	Condensador