Mod./Type: **_70/... FT...ES... - _90/... FT...ES...**

SIMPLE

cod./num. 2531824.00

data/date: 26/08/2014

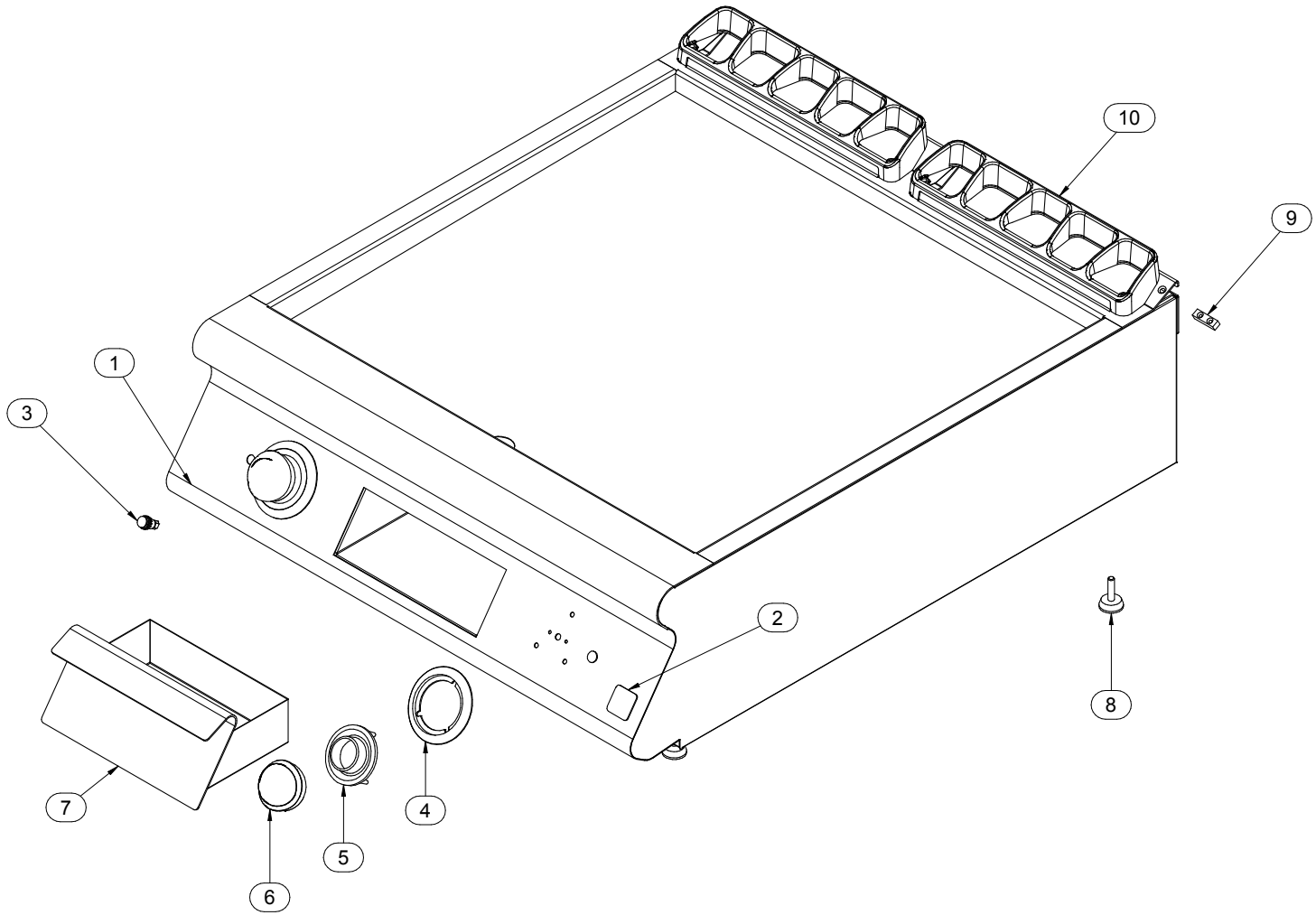

Mod./Type: **_70/... FT...E... - _ 90/... FT...E...**

EXTREME

cod./num. 2531635.00

data/date: 27/08/2014

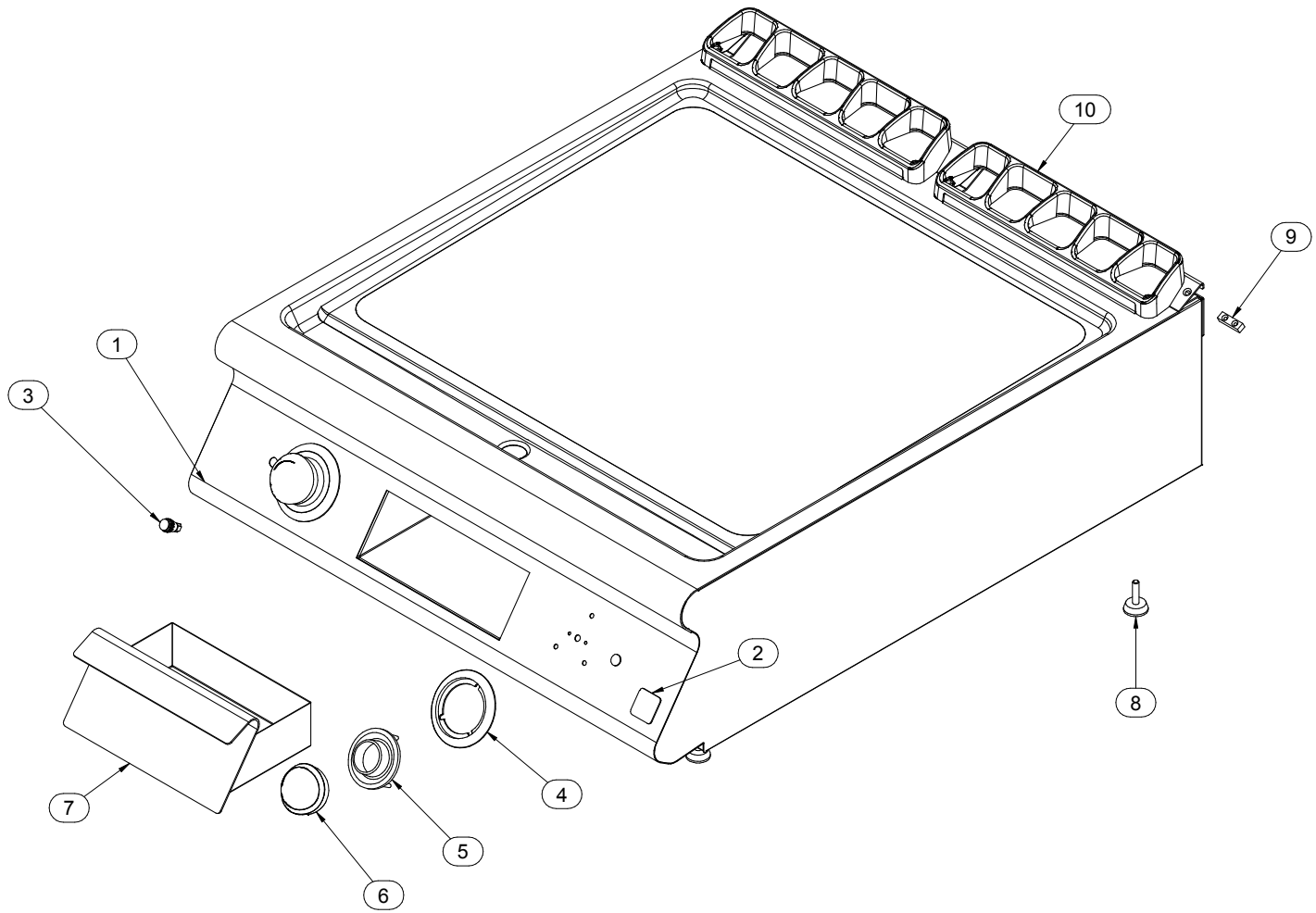

Mod./Type:	**_70/... FT...ES... - _90/... FT...ES...**	cod./num.	2531826.00
	SIMPLE	data/date:	27/08/2014

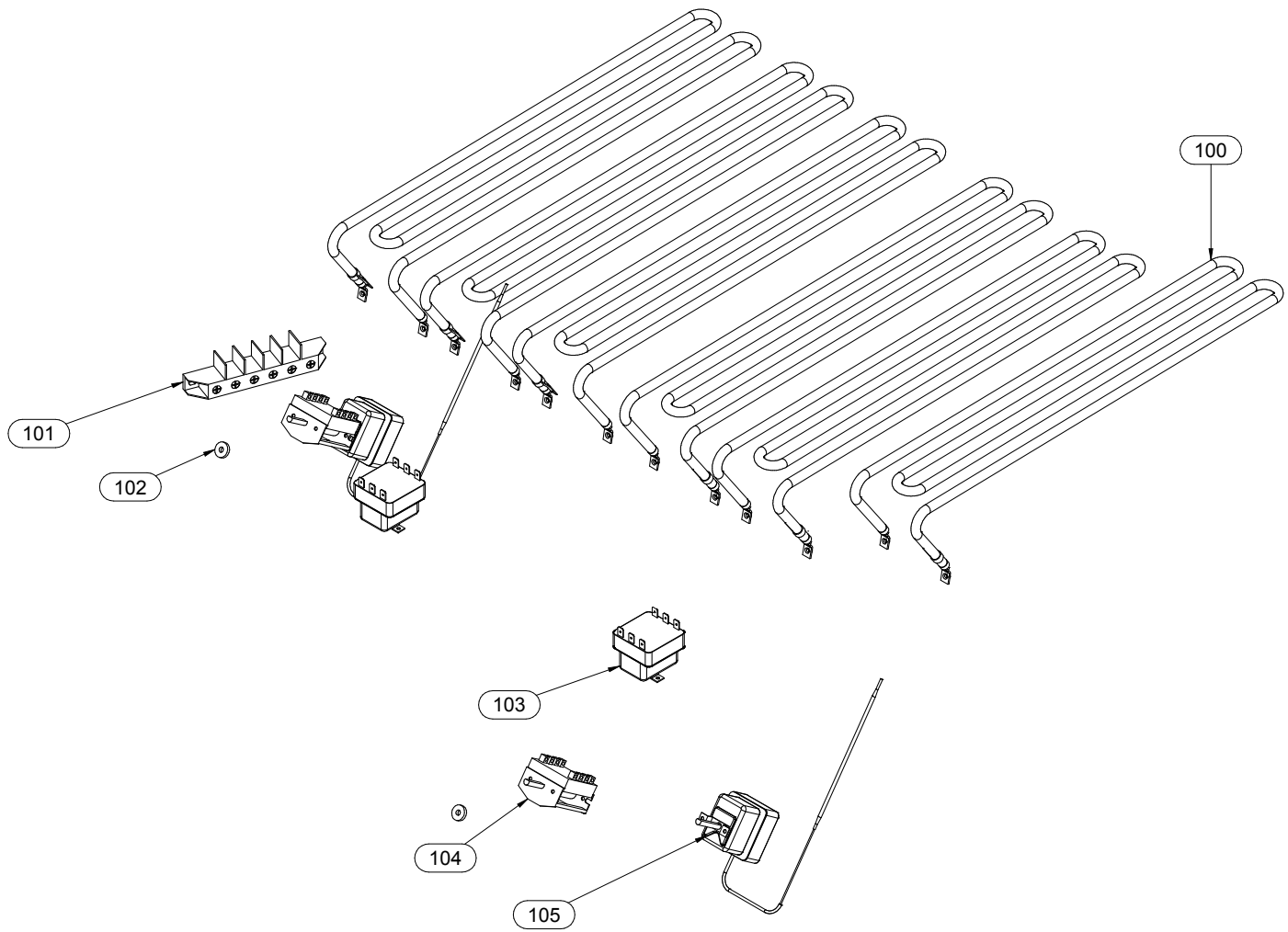

Mod./Type:	_70/... FT...E... - _90/... FT...E...	cod./num.	2531637.00
	EXTREME	data/date:	27/08/2014

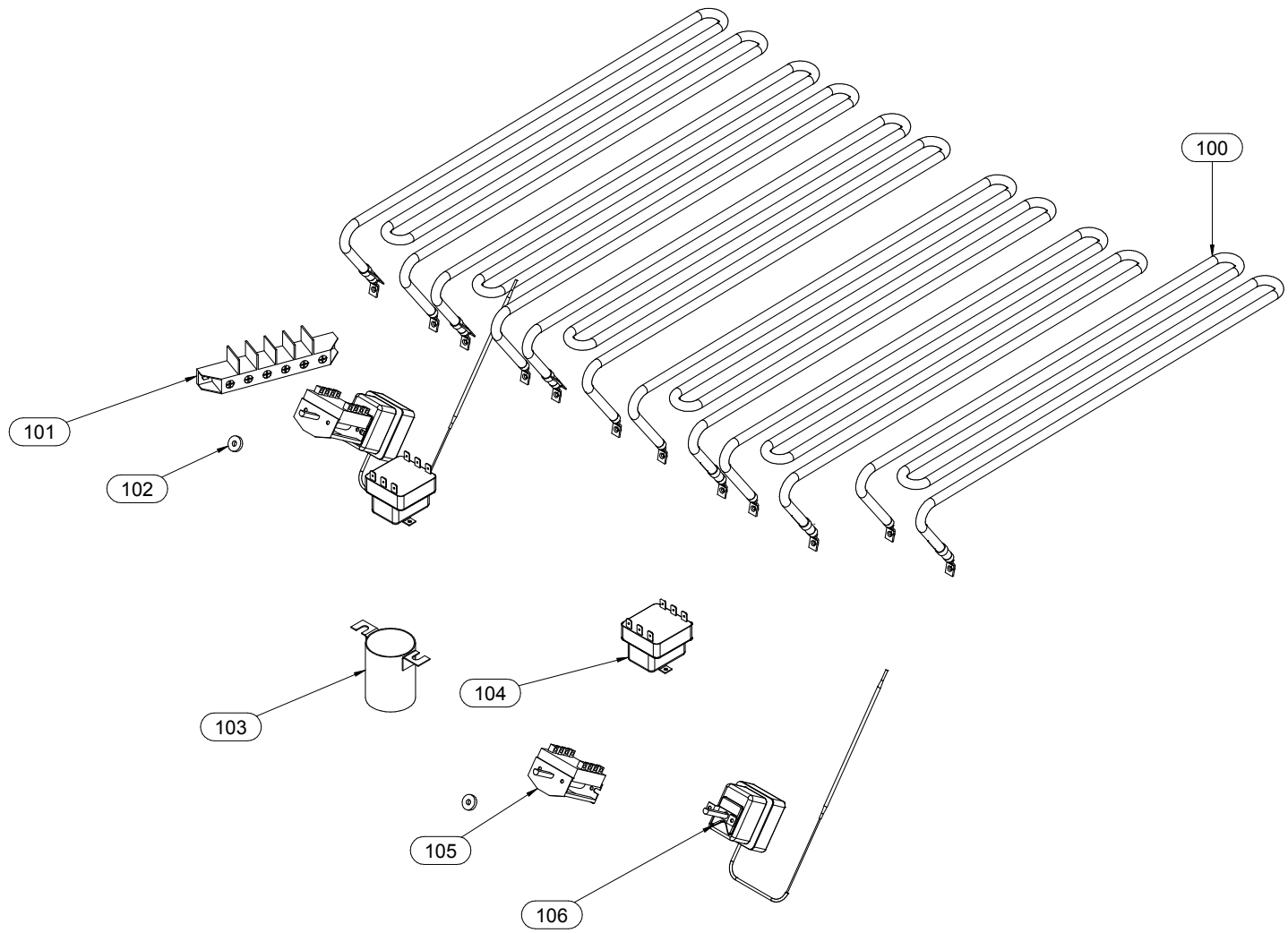

Mod./Type: **_70 - _90 .../40 ... - .../80 ... - .../120 ...**

VANO / CABINET - ...B - ...BE - ...BH2

cod./num. 2531578.00

data/date: 05/06/2014

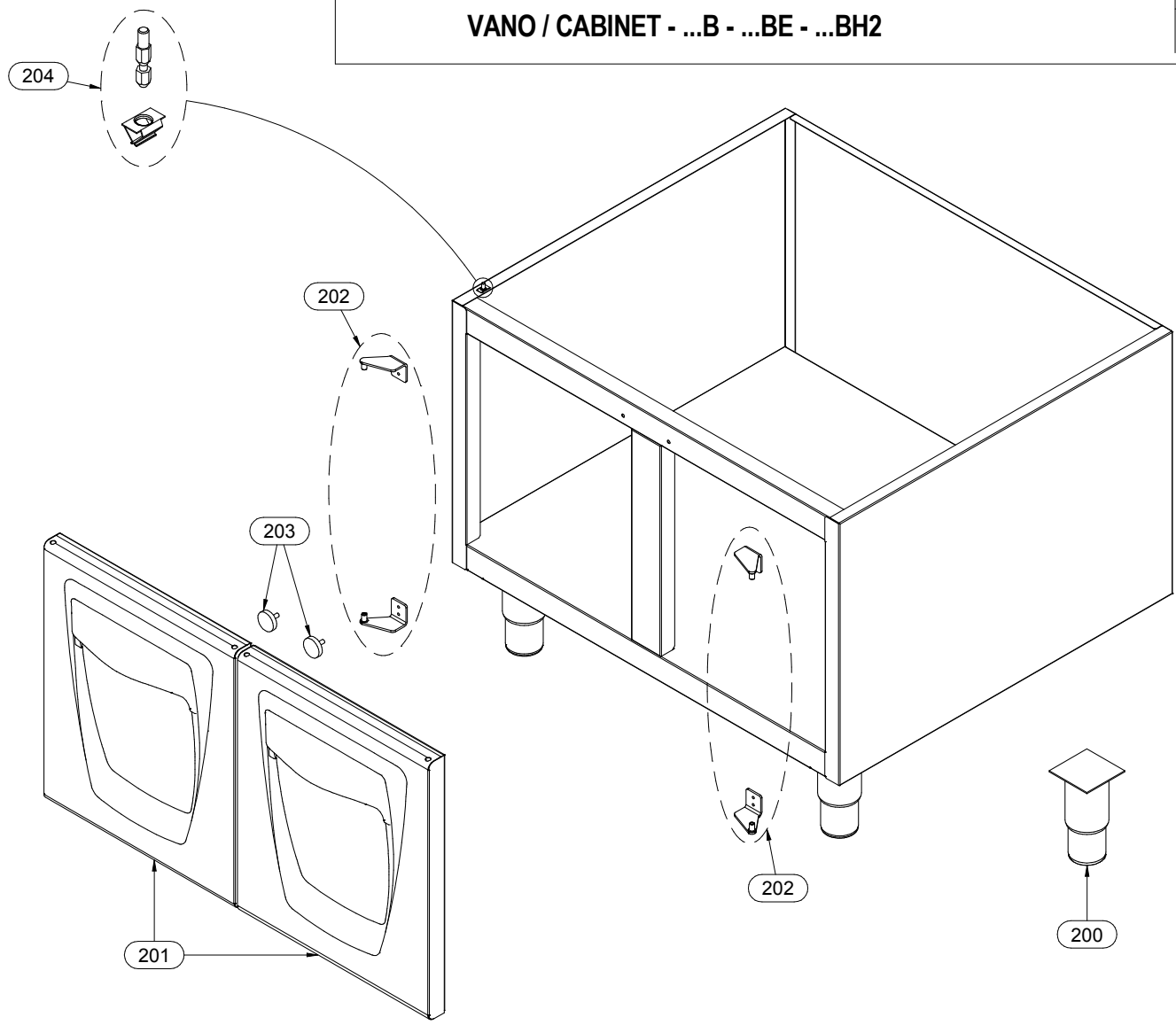

Mod.:	_70/... FT...ES... - _90/... FT...ES... SIMPLE			cod. / num. 2531825.00 data / date 26/08/2014 rif. / ref. 2531824.00		RICAMBI CONSIGLIATI - RECOMMENDED SPARE PARTS - PIECES DETACHEES RECOMMANDEES - EMPFOHLENEN ERSATZTEILE	EM70/40 FT...ES...	EM70/80 FT...ES...	EM70/120 FT...ES...	EM90/40 FT...ES...	EM90/80 FT...ES...	EM90/120 FT...ES...	NOTE	
POS.	DESCRIZIONE	DESCRIPTION	DENOMINATION	BENENNUNG	COD.		Q.ty							
1	CRUSCOTTO	CONTROL PANEL	BANDEAU	BEDIENBLENDE	256.452.00		1			1			FROM: 15.12.2011	TO: 14.07.2015
					256.452.13		1			1			FROM: 15.07.2015	TO:....
					256.453.00			1			1		FROM: 15.12.2011	TO: 14.07.2015
					256.453.13			1			1		FROM: 15.07.2015	TO:....
					256.456.00				1			1	FROM: 15.12.2011	TO: 14.07.2015
					256.456.13				1			1	FROM: 15.07.2015	TO:....
2	MARCHIO	BRAND NAME	MARQUE	MARKENZEICHEN	982.021.00		1	1	1	1	1	1	FROM: 15.12.2011	TO: 31.01.2014
					982.023.00		1	1	1	1	1	1	FROM: 01.02.2014	TO:...
3	LAMPADA SPIA ARANCIO	ORANGE INDICATOR LIGHT	LAMPE TEMOIN ORANGE	ORANGE KONTROLLAMPE	963.013.00		1	2	3	1	2	3		
4	SERIGRAFIA	SCREEN PRINT	SÉRIGRAPHIE	SIEBDRUCK	910.229.00		1	2	3	1	2	3		
5	LABIRINTO	LABYRINTH	LABYRINTHE	LABYRINTH	256.235.00		1	2	3	1	2	3		
6	MANOPOLA	KNOB	BOUTON	DREHKNOPF	256.234.00	*	1	2	3	1	2	3		
7	CASSETTO	DRAWER	TIROIR	SCHUBLADE	6111248.00		1			1				
					6111249.00			1	2		1	2		
8	PIEDINO	FOOT	PIED	STELLFUSS	951.083.00		4	4	4	4	4	4	SOLO VERSIONE (-T)	ONLY (-T) VERSION
9	PIASTRINA GIUNZIONE	FIXING PLATE	PLAQUETTE FIXAGE	BEFESTIGUNGSPLATTE	941.130.00		1	1	1	1	1	1		
10	GRIGLIA CAMINO	FLUE GRIDDLE	GRILLE POUR CHEMINÉE	KAMINROST	983.012.00		1	2	2	1	2	2		
11														
12														
13														
14														
15														
16														
17														
18														
19														
20														
21														
22														
23														
24														
25														
26														
27														
28														
29														
30														
31														
32														
33														
34														
35														
36														
37														

Mod.:	_90/... FT...E... EXTREME			cod. / num. 2532233.00 data / date 26/06/2015 rif. / ref. 2531635.00		RICAMBI CONSIGLIATI - RECOMMENDED SPARE PARTS - PIÈCES DÉTACHÉES RECOMMANDÉES - EMPFOHLENEN ERSATZTEILE	EM90/40 FT...E...	EM90/80 FT...E...	NOTE	
POS.	DESCRIZIONE	DESCRIPTION	DENOMINATION	BENENNUNG	COD.		Q.ty			
1	CRUSCOTTO	CONTROL PANEL	BANDEAU	BEDIENBLENDE	256.457.00		1		FROM: 15.12.2011	TO: 14.07.2015
					256.452.13		1		FROM: 15.07.2015	TO:....
					256.458.00			1	FROM: 15.12.2011	TO: 14.07.2015
					256.453.13			1	FROM: 15.07.2015	TO:....
2	MARCHIO	BRAND NAME	MARQUE	MARKENZEICHEN	982.021.00		1	1	FROM: 15.12.2011	TO: 31.01.2014
					982.023.00		1	1	FROM: 01.02.2014	TO:...
3	LAMPADA SPIA ARANCIO	ORANGE INDICATOR LIGHT	LAMPE TEMOIN ORANGE	ORANGE KONTROLLAMPE	963.013.00		1	2		
4	SERIGRAFIA	SCREEN PRINT	SÉRIGRAPHIE	SIEBDRUCK	910.229.00		1	2		
5	LABIRINTO	LABYRINTH	LABYRINTHE	LABYRINTH	256.235.00		1	2		
6	MANOPOLA	KNOB	BOUTON	DREHKNOPF	256.234.00	*	1	2		
7	CASSETTO	DRAWER	TIROIR	SCHUBLADE	6111127.13		1		FROM: 15.12.2011	TO: 14.07.2015
					6111248.00		1		FROM: 15.07.2015	TO:....
					6111129.13			1	FROM: 15.12.2011	TO: 14.07.2015
					6111249.00			1	FROM: 15.07.2015	TO:....
8	PIEDINO	FOOT	PIED	STELLFUSS	951.083.00		4	4	SOLO VERSIONE (-T)	ONLY (-T) VERSION
9	PIASTRINA GIUNZIONE	FIXING PLATE	PLAQUETTE FIXAGE	BEFESTIGUNGSPLATTE	941.130.00		1	1		
10	GRIGLIA CAMINO	FLUE GRIDDLE	GRILLE POUR CHEMINÉE	KAMINROST	982.012.00		1	2		
11										
12										
13										
14										
15										
16										
17										
18										
19										
20										
21										
22										
23										
24										
25										
26										
27										
28										
29										
30										
31										
32										
33										
34										

Mod.:	_70/... FT...ES... - _90/... FT...ES... SIMPLE			cod. / num. 2531827.00 data / date 27/08/2014 rif. / ref. 2531826.00		RICAMBI CONSIGLIATI - RECOMMENDED SPARE PARTS - PIÈCES DÉTACHÉES RECOMMANDÉES - EMPFOHLENEN ERSATZTEILE	_70/40 FT...ES...	_70/80 FT...ES...	_70/120 FT...ES...	_90/40 FT...ES...	_90/80 FT...ES...	_90/120 FT...ES...	NOTE
POS.	DESCRIZIONE	DESCRIPTION	DENOMINATION	BENENNUNG	COD.		Q.ty						
100	RESISTENZA	HEATING ELEMENT	RESISTANCE	HEINZELEMENT	665.095.12	*	3	6	9				
					965.059.12	*				3	6	9	
101	MORSETTIERA	TERMINAL BOARD	BORNES	KLEMMENBRETT	M566050500		1	1	1	1	1	1	
102	GUARNIZIONE	WASHER	GUARNITURE	DICHTUNGSRING	953.020.00		1	2	3	1	2	3	
103	TERMOSTATO SICUREZZA	SAFETY THERMOSTAT	THERMOSTAT DE SECURITE	TEMPERATURBEGRENZER	661.115.00	*	1	2	3	1	2	3	
104	COMMUTATORE	CHANGE-OVER SWITCH	COMMUTATEUR	UMSCHALTER	661.000.00	*	1	2	3	1	2	3	
105	TERMOSTATO	THERMOSTAT	THERMOSTAT	THERMOSTAT	661.116.00	*	1	2	3	1	2	3	
106													
107													
108													
109													
110													
111													
112													
113													
114													
115													
116													
117													
118													
119													
120													
121													
122													
123													
124													
125													
126													
127													
128													
129													
130													
131													
132													
133													
134													
135													
136													
137													

Mod.:	_70/... FT...E... - _90/... FT...E... EXTREME			cod. / num. 2531638.00 data / date 27/08/2014 rif. / ref. 2531637.00		RICAMBI CONSIGLIATI - RECOMMENDED SPARE PARTS - PIECES DETACHEES RECOMMANDEES - EMPFOHLENEN ERSATZTEILE	_70/40 FT...E...	_70/80 FT...E...	_90/40 FT...E...	_90/80 FT...E...	NOTE	
POS.	DESCRIZIONE	DESCRIPTION	DENOMINATION	BENENNUNG	COD.		Q.ty					
100	RESISTENZA	HEATING ELEMENT	RESISTANCE	HEINZELEMENT	665.095.00	*	3	6			FROM: 01.10.2012	TO: 05.05.2014
					665.095.12	*	3	6			FROM: 06.05.2014	TO:....
					965.059.00	*			3	6	FROM: 01.06.2012	TO: 05.05.2014
					965.059.12	*			3	6	FROM: 06.05.2014	TO:....
101	MORSETTIERA	TERMINAL BOARD	BORNES	KLEMMENBRETT	M566050500		1	1	1	1		
102	GUARNIZIONE	WASHER	GUARNITURE	DICHTUNGSRING	953.020.00		1	2	1	2		
103	SCARICO	DRAIN	VIDANGE	ABLAUF	931.198.00		-	-	1	1	FROM: 15.12.2011	TO: 14.07.2015
					631.175.00		1	1	1	1	FROM: 15.07.2015	TO:....
104	TERMOSTATO SICUREZZA	SAFETY THERMOSTAT	THERMOSTAT DE SECURITE	TEMPERATURBEGRENZER	661.115.00	*	1	2	1	2		
105	COMMUTATORE	CHANGE-OVER SWITCH	COMMUTATEUR	UMSCHALTER	661.000.00	*	1	2	1	2		
106	TERMOSTATO	THERMOSTAT	THERMOSTAT	THERMOSTAT	661.116.00	*	1	2	1	2		
107												
108												
109												
110												
111												
112												
113												
114												
115												
116												
117												
118												
119												
120												
121												
122												
123												
124												
125												
126												
127												
128												
129												
130												
131												
132												
133												
134												

Mod.:	_70/... - _90/… VANO / CABINET …B - …BE - …BH2			cod. / num. 2531579.00 data / date 05/06/2014 rif. / ref. 2531578.00		RICAMBI CONSIGLIATI - RECOMMENDED SPARE PARTS - PIÈCES DÉTACHÉES RECOMMANDÉES - EMPFOHLENEN ERSATZTEILE	EM70/40 ...	EM70/80 ...	EM70/120 ...	EM90/40 ...	EM90/80 ...	EM90/120 ...	NOTE	
POS.	DESCRIZIONE	DESCRIPTION	DENOMINATION	BENENNUNG	COD.		Q. ty							
200	PIEDINO	FOOT	PIED	STELLFUSS	912.090.00		4	4	4	4	4	4	FROM: 15.12.2011	TO: 17.05.2013
					912.090.14		4	4	4	4	4	4	FROM: 18.05.2013	TO:...
201	PORTA	DOOR	PORTE	TÜR	256.215.00		1	2	3	1	2	3		
202	COPPIA CERNIERE	GASKETS PAIR	COUPLE CHARNIÈRES	SCHARNIERPAAR	256.216.00		1	2	3	1	2	3		
203	MAGNETE	MAGNET	MAGNÉTO	MAGNET	684.007.00		1	2	3	1	2	3	FROM: 15.12.2011	TO: 01.01.2014
					984.006.00		1	2	3	1	2	3	FROM: 02.01.2014	TO:...
204	FISSAGGIO	FIXING	FIXAGE	BEFESTIGUNG	256.431.00		4	4	4	4	4	4	FROM: 04.05.2015	TO:...
205														
206														
207														
208														
209														
210														
211														
212														
213														
214														
215														
216														
217														
218														
219														
220														
221														
222														
223														
224														
225														
226														
227														
228														
229														
230														
231														
232														
233														
234														