Mod./Type: **_70/... TP...E... - _90/... TP...E...**

**EXTREME**

cod./num. 2531633.00

data/date: 13/05/2014

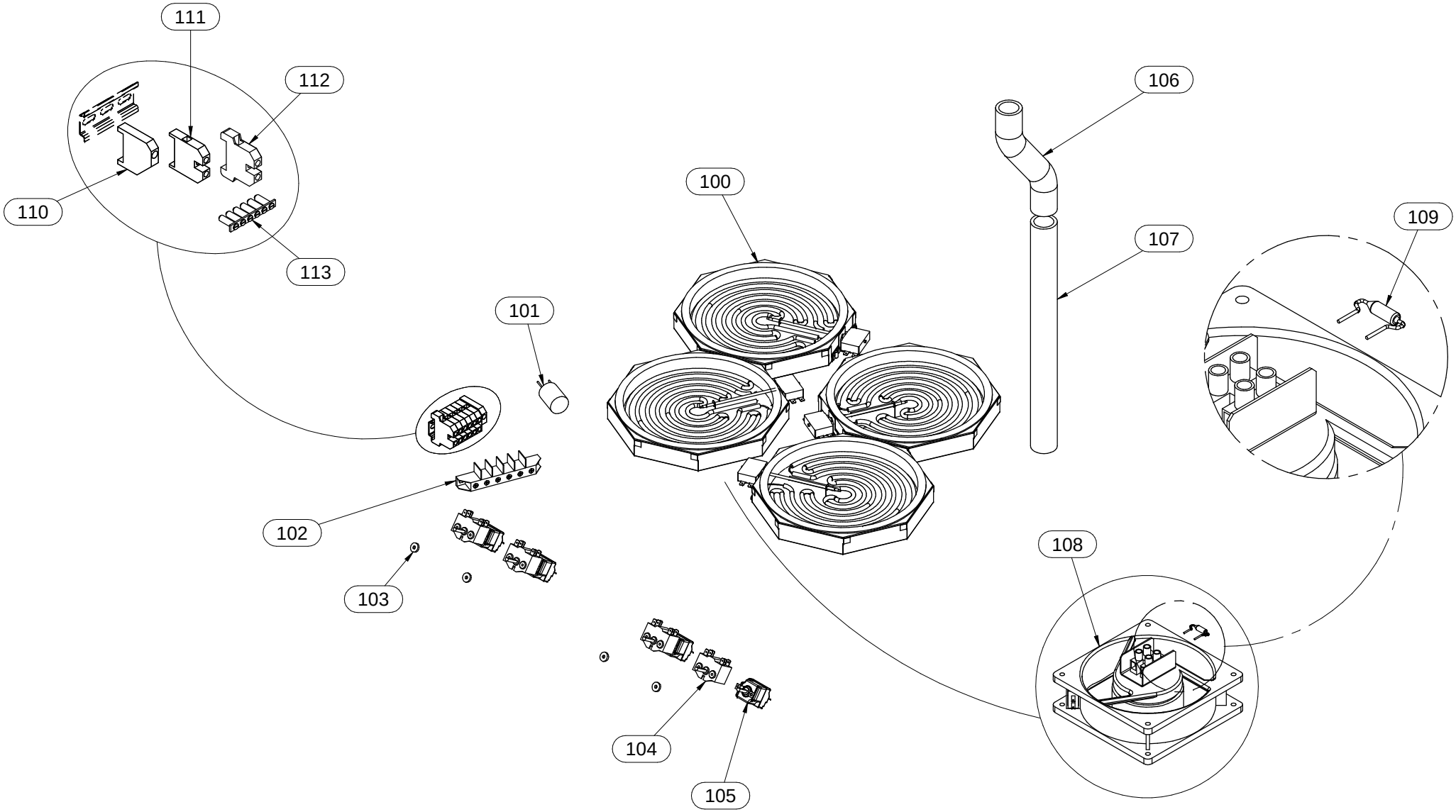

| Mod./Type: | _90/... TPFE... EXTREME | cod./num. | 2531822.00 |
|---|---|---|---|
| | | data/date: | 25/08/2014 |

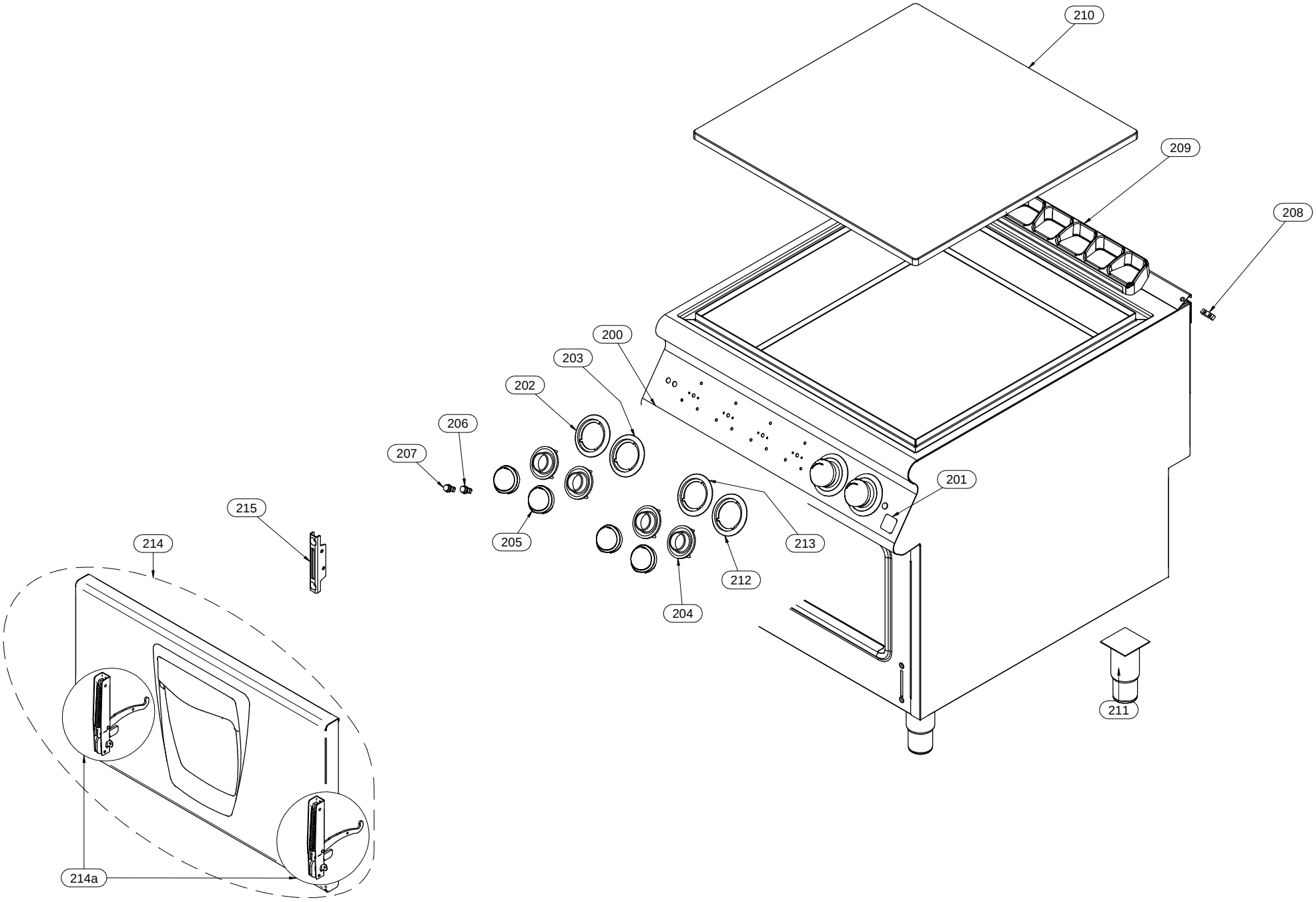

Mod./Type: **_70/... ...F...E... - _90/... ...F...E...**

**ELECTRIC OVEN**

cod./num. 2531630.00

data/date: 06/06/2014

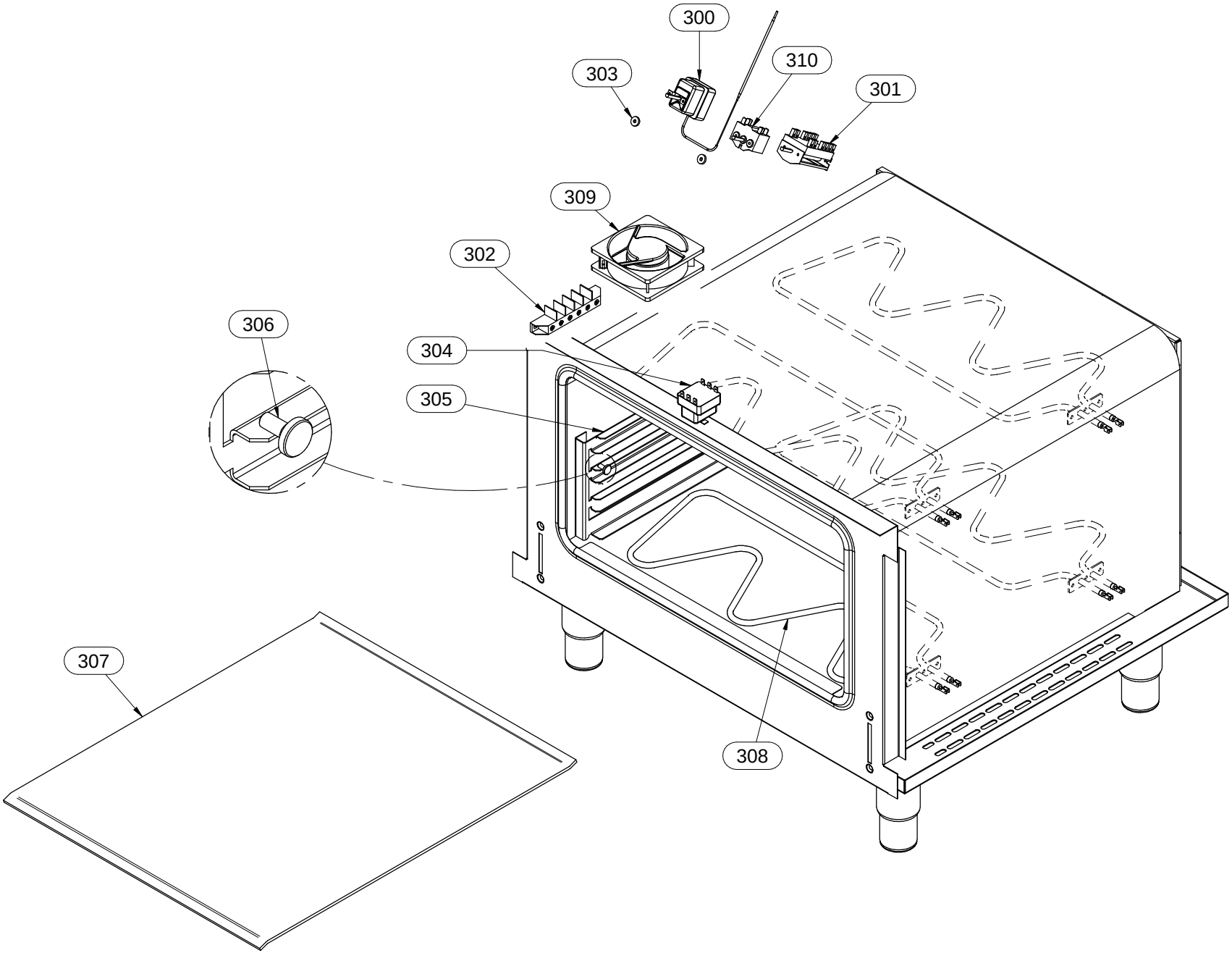

| Mod.: | _70/... TP...E... - _90/... TP...E... EXTREME | | | cod. / num. 2531634.00<br>data / date 05/05/2014<br>rif. / ref. 2531633.00 | | _70/80 TPE... | _70/80 TPFE | _70/80 TPFE2 | _90/80 TPE... | _90/80 TPE2... | _90/80 TPFE | _90/80 TPFE2 | NOTE | |
|---|---|---|---|---|---|---|---|---|---|---|---|---|---|---|
| POS. | DESCRIZIONE | DESCRIPTION | DENOMINATION | BENENNUNG | COD. | Q.ty | | | | | | | | |
| 100 | RESISTENZA | HEATING ELEMENT | RESISTANCE | HEINZELEMENT | 665.052.00 | 4 | 4 | 4 | | | | | | |
| | | | | | 965.041.00 | | | | 4 | 4 | 4 | 4 | | |
| 101 | FILTRO ANTIDISTURBO | STORFILTER | FILTER ANTIBROUILLAGE | ANTIJAMMING FILTER | 464.067.00 | 3 | 3 | 3 | 3 | 3 | 3 | 3 | | |
| 102 | MORSETTIERA | TERMINAL BOARD | BORNES | KLEMMENBRETT | M566050500 | 1 | 1 | - | 1 | - | 1 | - | | |
| 103 | GUARNIZIONE | WASHER | GUARNITURE | DICHTUNGSRING | 953.020.00 | 4 | 6 | 6 | 4 | 4 | 6 | 6 | | |
| 104 | COMMUTATORE | CHANGE-OVER SWITCH | COMMUTATEUR | UMSCHALTER | 661.093.00 | 4 | 4 | 4 | 4 | 4 | 4 | 4 | | |
| 105 | TERMOSTATO | THERMOSTAT | THERMOSTAT | THERMOSTAT | 661.121.00 | 4 | 4 | 4 | 4 | 4 | 4 | 4 | | |
| 106 | SCARICO | DRAIN | VIDANGE | ABLAUF | 0831.2027.00 | 0.25 | 0.8 | 0.8 | 0.25 | 0.25 | 0.5 | 0.5 | (U.M. metri) | (U.M.meters) |
| 107 | SCARICO | DRAIN | VIDANGE | ABLAUF | 0831.2027.00 | 0.41 | - | - | 0.41 | 0.41 | - | - | (U.M. metri) - NO PER VERSIONE (-T) | (U.M.meters) - NOT FOR (-T) VERSION |
| 108 | VENTOLA | FAN | VENTILATEUR | LÜFTERRAD | 764.055.00 | 1 | 1 | 1 | 1 | 1 | 1 | 1 | | |
| 109 | TERMOFUSIBILE | THERMAL FUSE | FUSIBLE THERMIQUE | THERMO-SCHMELZSICHERUNG | 663.078.00 | 1 | 1 | 1 | | | | | | |
| | | | | | 663.077.00 | | | | 1 | 1 | 1 | 1 | | |
| 110 | BLOCCAMORSETTI | TERMINAL STOPPER | BORNE BLOQUANT | BLÖCK-KLEMME | 663.059.00 | - | - | 1 | - | 1 | - | 1 | | |
| 111 | MORSETTO | TERMINAL | BORNE | KLEMME | 663..061.00 | - | - | 6 | - | 6 | - | 6 | | |
| 112 | MORSETTO TERRA - PE | PE-TERMINAL | BORNE PE | ERD-KLEMME | 663.060.00 | - | - | 1 | - | 1 | - | 1 | | |
| 113 | BARRETTE COLLEGAMENTO | CONNECTOR PIN | BARRETTE DE CONNECTION | VERBINDUNG-STAB | 663.056.00 | - | - | 1 | - | 1 | - | 1 | | |
| 114 | | | | | | | | | | | | | | |
| 115 | | | | | | | | | | | | | | |
| 116 | | | | | | | | | | | | | | |
| 117 | | | | | | | | | | | | | | |
| 118 | | | | | | | | | | | | | | |
| 119 | | | | | | | | | | | | | | |
| 120 | | | | | | | | | | | | | | |
| 121 | | | | | | | | | | | | | | |
| 122 | | | | | | | | | | | | | | |
| 123 | | | | | | | | | | | | | | |
| 124 | | | | | | | | | | | | | | |
| 125 | | | | | | | | | | | | | | |
| 126 | | | | | | | | | | | | | | |
| 127 | | | | | | | | | | | | | | |
| 128 | | | | | | | | | | | | | | |
| 129 | | | | | | | | | | | | | | |
| 130 | | | | | | | | | | | | | | |
| 131 | | | | | | | | | | | | | | |
| 132 | | | | | | | | | | | | | | |
| 133 | | | | | | | | | | | | | | |
| 134 | | | | | | | | | | | | | | |
| 135 | | | | | | | | | | | | | | |
| 136 | | | | | | | | | | | | | | |
| 137 | | | | | | | | | | | | | | |
| 138 | | | | | | | | | | | | | | |
| 139 | | | | | | | | | | | | | | |
| 140 | | | | | | | | | | | | | | |

| Mod.: | _90/... TPFE...<br>EXTREME | | | cod. / num. 2531823.00<br>data / date 25/08/2014<br>rif. / ref. 2531822.00 | | EM90/80 TPFE | EM90/80 TPFE2 | NOTE | |
|---|---|---|---|---|---|---|---|---|---|
| POS. | DESCRIZIONE | DESCRIPTION | DENOMINATION | BENENNUNG | COD. | Q. ty | | | |
| **200** | CRUSCOTTO | CONTROL PANEL | BANDEAU | BEDIENBLENDE | 9111345.00 | 1 | 1 | | |
| **201** | MARCHIO | BRAND NAME | MARQUE | MARKENZEICHEN | 982.021.00 | 1 | 1 | **FROM: 15.12.2011** | **TO: 31.01.2014** |
| | | | | | 982.023.00 | 1 | 1 | **FROM: 01.02.2014** | **TO:...** |
| **202** | SERIGRAFIA | SCREEN PRINT | SÉRIGRAPHIE | SIEBDRUCK | 910.171.00 | 2 | 2 | | |
| **203** | SERIGRAFIA | SCREEN PRINT | SÉRIGRAPHIE | SIEBDRUCK | 910.172.00 | 2 | 2 | | |
| **204** | LABIRINTO | LABYRINTH | LABYRINTHE | LABYRINTH | 256.235.00 | 6 | 6 | | |
| **205** | MANOPOLA | KNOB | BOUTON | DREHKNOPF | 256.234.00 | 6 | 6 | | |
| **206** | LAMPADA SPIA ARANCIO | ORANGE INDICATOR LIGHT | LAMPE TEMOIN ORANGE | ORANGE KONTROLLAMPE | 963.013.00 | 2 | 2 | | |
| **207** | LAMPADA SPIA ROSSA | RED INDICATOR LIGHT | LAMPE TEMOIN ROUGE | ROTE KONTROLLLAMPE | 963.014.00 | 1 | 1 | | |
| **208** | PIASTRINA GIUNZIONE | FIXING PLATE | PLAQUETTE FIXAGE | BEFESTIGUNGSPLATTE | 941.130.00 | 1 | 1 | | |
| **209** | GRIGLIA CAMINO | FLUE GRIDDLE | GRILLE POUR CHEMINÉE | KAMINROST | 982.013.00 | 1 | 1 | | |
| **210** | PIASTRA | SOLID TOP | PLAQUE COUP DE FEU | KOCHFELD | 981.097.00 | 1 | 1 | | |
| **211** | PIEDINO | FOOT | PIED | STELLFUSS | 912.090.00 | 4 | 4 | **FROM: 15.12.2011** | **TO: 17.05.2013** |
| | | | | | 912.090.14 | 4 | 4 | **FROM: 18.05.2013** | **TO:...** |
| **212** | SERIGRAFIA | SCREEN PRINT | SÉRIGRAPHIE | SIEBDRUCK | 910.193.00 | 1 | 1 | | |
| **213** | SERIGRAFIA TERMOSTATO | THERMOSTAT SCREEN PRINT | SÉRIGRAPHIE THERMOSTAT | SIEBDRUCK DES THERMOSTAT | 910.175.00 | 1 | 1 | | |
| **214** | PORTA | DOOR | PORTE | TÜR | 910.297.00 | 1 | 1 | | |
| 214a | CERNIERA | JOINT | CHARNIERE | SCHARNIER | 684.030.00 | 2 | 2 | | |
| **215** | PORTARULLINO | ROLL HOLDER | PORTE-AIGUILLE DE ROULEMENT | ROLLE-TRÄGER | 684.011.00 | 2 | 2 | | |
| **216** | | | | | | | | | |
| **217** | | | | | | | | | |
| **218** | | | | | | | | | |
| **219** | | | | | | | | | |
| **220** | | | | | | | | | |
| **221** | | | | | | | | | |
| **222** | | | | | | | | | |
| **223** | | | | | | | | | |
| **224** | | | | | | | | | |
| **225** | | | | | | | | | |
| **226** | | | | | | | | | |
| **227** | | | | | | | | | |
| **228** | | | | | | | | | |
| **229** | | | | | | | | | |
| **230** | | | | | | | | | |
| **231** | | | | | | | | | |

| Mod.: | _70/… …F…E… - _90/… …F…E…<br>ELECTRIC OVEN | | | cod. / num. 2531631.00<br>data / date 02/05/2014<br>rif. / ref. 2531630.00 | | _70/……FGE… | _70/……FE… | _70/… TPFE… | _90/……FGE… | _90/160 …FGE… | _90/……FE… | _90/… TPFE… | NOTE |
|---|---|---|---|---|---|---|---|---|---|---|---|---|---|
| POS. | DESCRIZIONE | DESCRIPTION | DENOMINATION | BENENNUNG | COD. | Q. ty | | | | | | | |
| 300 | TERMOSTATO | THERMOSTAT | THERMOSTAT | THERMOSTAT | 661.114.00 | 1 | 1 | 1 | 1 | 2 | 1 | 1 | |
| 301 | COMMUTATORE FORNO | OVEN CHANGE-OVER SWITCH | COMMUTATEUR FOUR | UMSCHALTER BACKOFEN | 661.113.00 | 1 | 1 | 1 | 1 | 2 | 1 | 1 | |
| 302 | MORSETTIERA | TERMINAL BOARD | BORNES | KLEMMENBRETT | M566050500 | 1 | - | - | 1 | 1 | - | - | |
| 303 | GUARNIZIONE | WASHER | GUARNITURE | DICHTUNGSRING | 953.020.00 | 2 | 2 | 2 | 2 | 4 | 2 | 2 | |
| 304 | TERMOSTATO SICUREZZA | SAFETY THERMOSTAT | THERMOSTAT DE SECURITE | TEMPERATURBEGRENZER | 661.115.00 | 1 | 1 | 1 | 1 | 2 | 1 | 1 | |
| 305 | REGGIGRIGLIA | TRAY RACK | PORTE-PLAQUES | EINHÄNGEGESTELL | 622.967.00 | 2 | 2 | 2 | 2 | 4 | 2 | 2 | |
| 306 | FISSAGGIO REGGIGRIGLIA | TRAY RACK FIXING | FIXAGE PORTE-PLAQUES | BEFESTIGUNG DES EINHÄNGEGESTELLS | 641.090.00 | 4 | 4 | 4 | 4 | 8 | 4 | 4 | |
| 307 | SUOLA FORNO | INNER OVEN SOLE | SOLE DU FOUR | OFENINNENBODEN | 635.029.00 | 1 | 1 | 1 | 1 | 2 | 1 | 1 | |
| 308 | RESISTENZA FORNO | OVEN HEATING ELEMENT | RESISTANCE DU FOUR | BACKOFEN HEINZELEMENT | 965.060.00 | 4 | 4 | 4 | 4 | 8 | 4 | 4 | |
| 309 | VENTOLA | FAN | VENTILATEUR | LÜFTERRAD | 764.055.00 | - | - | 1 | - | - | - | 1 | |
| 310 | COMMUTATORE | CHANGE-OVER SWITCH | COMMUTATEUR | UMSCHALTER | 661.093.00 | - | - | 1 | - | - | - | 1 | |
| 311 | | | | | | | | | | | | | |
| 312 | | | | | | | | | | | | | |
| 313 | | | | | | | | | | | | | |
| 314 | | | | | | | | | | | | | |
| 315 | | | | | | | | | | | | | |
| 316 | | | | | | | | | | | | | |
| 317 | | | | | | | | | | | | | |
| 318 | | | | | | | | | | | | | |
| 319 | | | | | | | | | | | | | |
| 320 | | | | | | | | | | | | | |
| 321 | | | | | | | | | | | | | |
| 322 | | | | | | | | | | | | | |
| 323 | | | | | | | | | | | | | |
| 324 | | | | | | | | | | | | | |
| 325 | | | | | | | | | | | | | |
| 326 | | | | | | | | | | | | | |
| 327 | | | | | | | | | | | | | |
| 328 | | | | | | | | | | | | | |
| 329 | | | | | | | | | | | | | |
| 330 | | | | | | | | | | | | | |
| 331 | | | | | | | | | | | | | |
| 332 | | | | | | | | | | | | | |
| 333 | | | | | | | | | | | | | |
| 334 | | | | | | | | | | | | | |
| 335 | | | | | | | | | | | | | |
| 336 | | | | | | | | | | | | | |
| 337 | | | | | | | | | | | | | |
| 338 | | | | | | | | | | | | | |
| 339 | | | | | | | | | | | | | |
| 340 | | | | | | | | | | | | | |