	TABLE	REV
	KI5110	04

BLENDER KF1 S-KF2 S

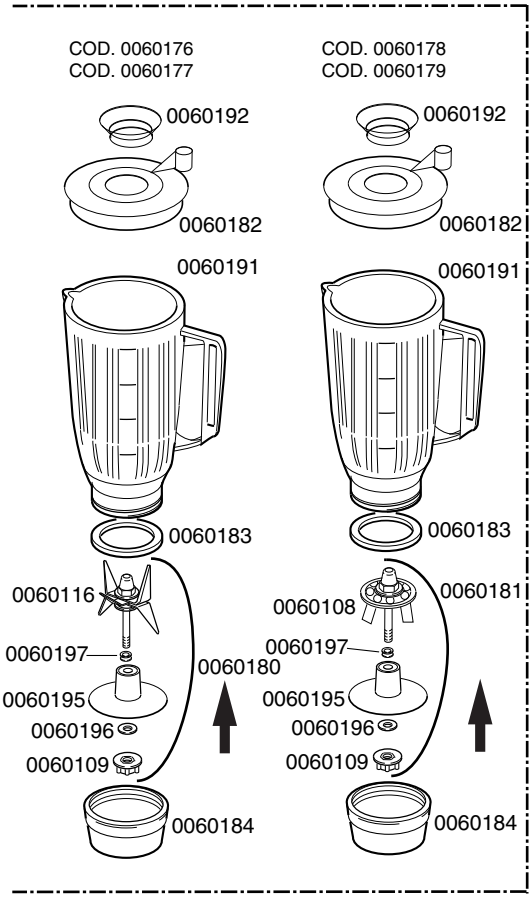

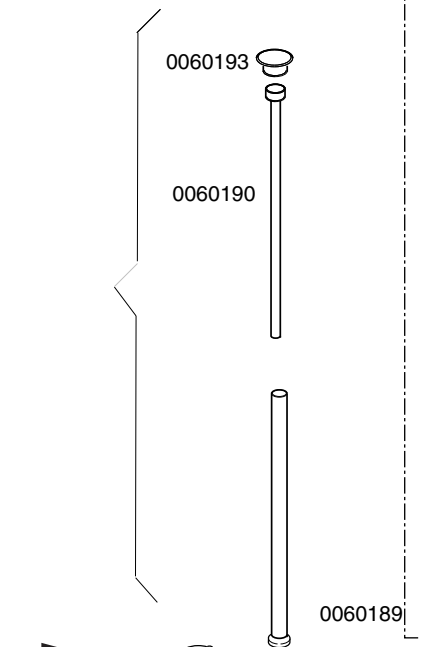

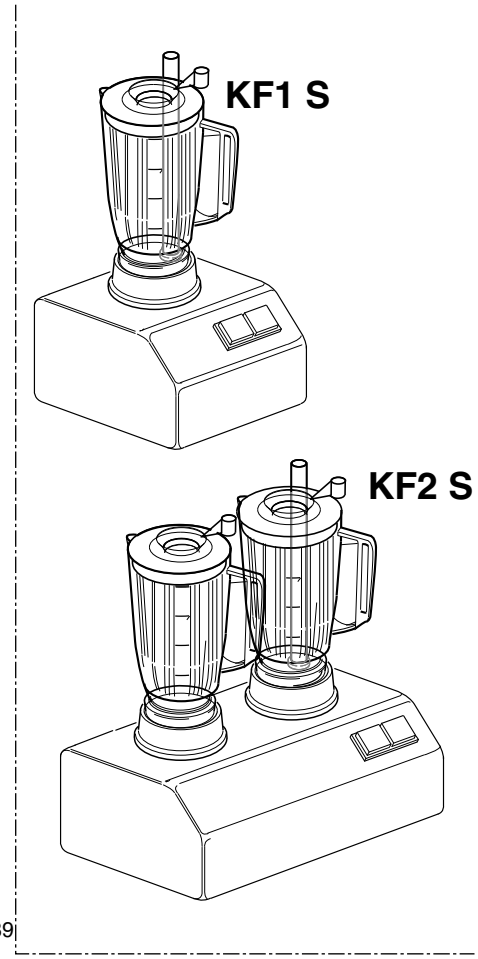

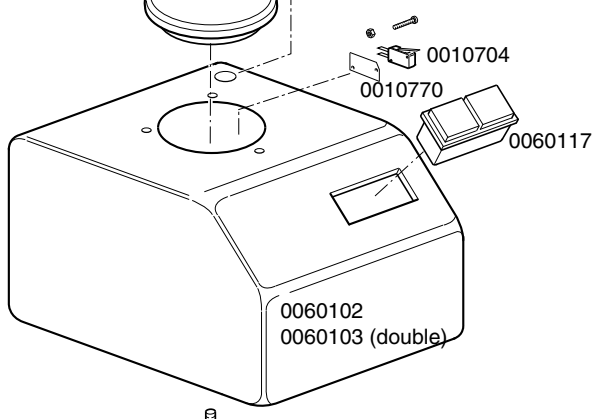

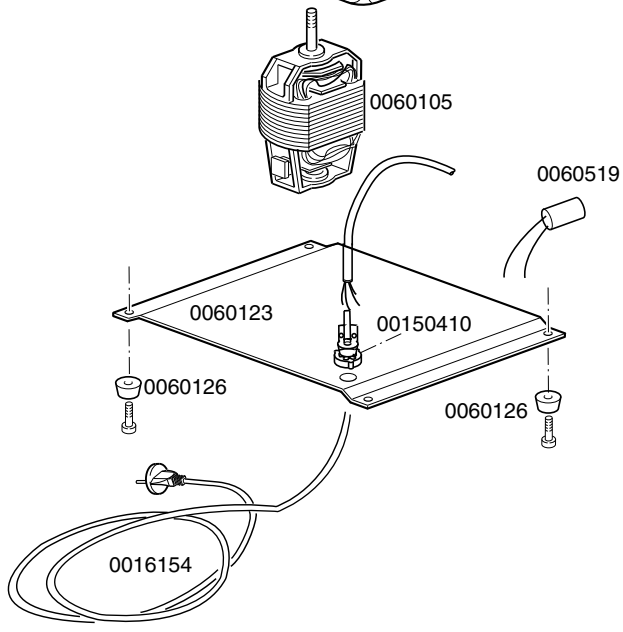

BLENDER KF1-KF2

TABLE
KI5110

CODE	DESCRIPTION	CODE	DESCRIPTION
0010704	Safety micro		
00150410	Cable pass		
0010770	Bakelite insulator		
0016154	Power supply cable		
0060102	Single cover		
0060103	Double cover		
0060105	R93 2V engine		
0060107	Female gear		
0060108	Mixer cone		
0060109	Male gear		
0060113	Male gear insert		
0060116	Knife assembly		
0060117	Double switch		
0060123	End-panel		
0060126	Rubber small foot		
0060176	Complete glass 1,5 liter with blade		
0060177	Complete glass 3 liter with blade		
0060178	Complete glass 1,5 liter with cone		
0060179	Complete glass 3 liter with cone		
0060180	Knife assembly		
0060181	Mixer cone assembly		
0060182	Glass cover		
0060183	Glass gasket		
0060184	Glass base		
0060185	Male gear		
0060187	Gear support		
0060188	Cylindrical support		
0060189	Micro holder pipe		
0060190	Axis for micro		
0060191	Glass 1,5 liter		
0060192	Plug for glass cover		
0060193	Plug for axis for micro		
0060194	Stand for axis for micro		
0060195	Bushing support disk		
0060196	Anti-friction washer		
0060519	Radio interference filter		
0060197	V-ring Ø 6		