DESPIECE TECNICO

Marmitas a gas de fuego directo
Gas direct boling pans
Marmites á gaz chauffage direct
Gas -Kochkessel mit direktbeheizung
Pentole riscaldamento diretto a gas
Marmitas a gás de fogo direto

GAMA 900

Modelos:

MG9-10 PLUS
MG9-15 PLUS
MG9-20 PLUS

Octubre 2011 October
Revisado Marzo 2014 March Revised

FAGOR

FAGOR INDUSTRIAL

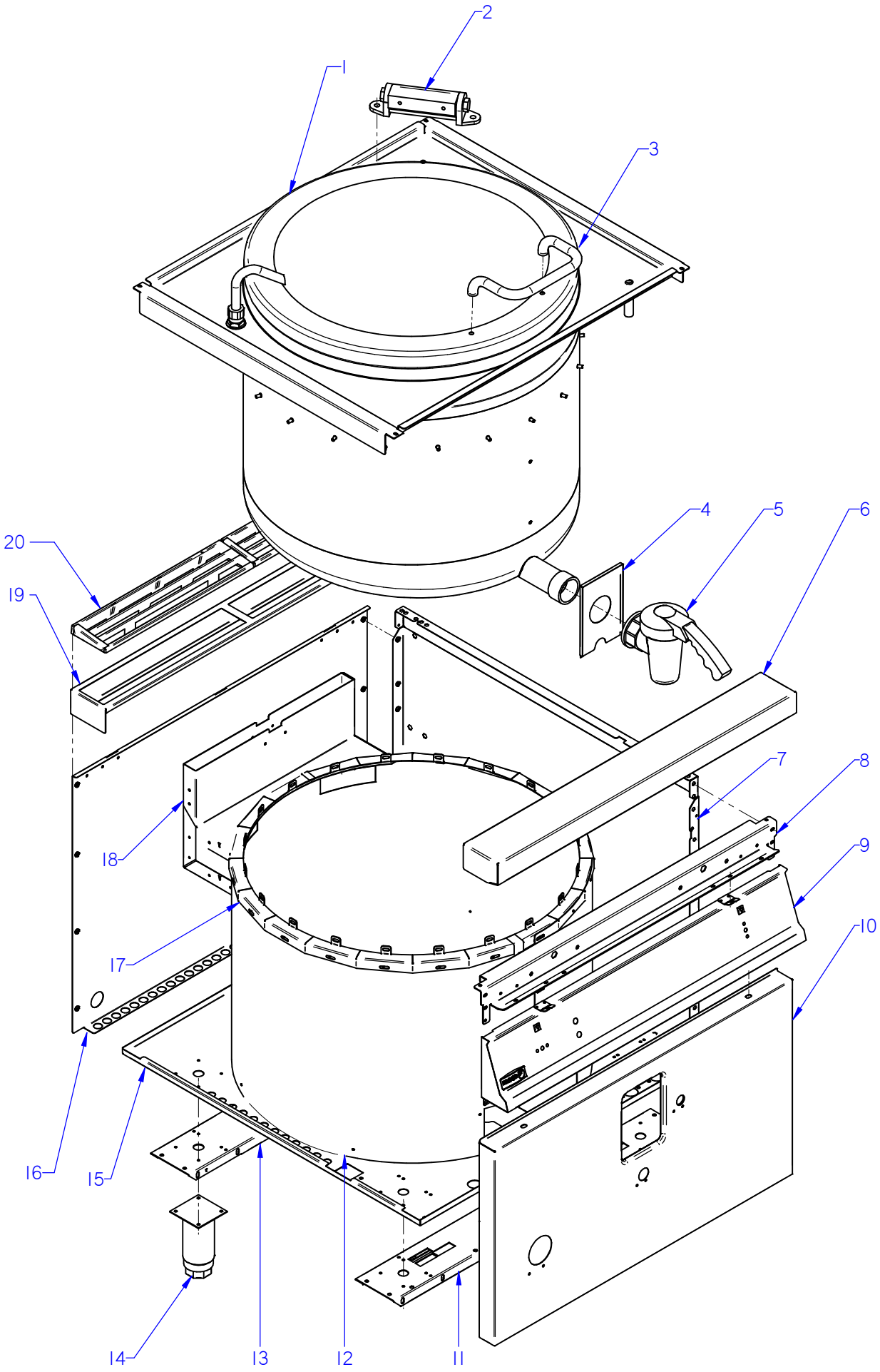

ITEM MARCADO EN COLOR = REPUESTO RECOMENDADO
COLOURED ITEM = RECOMMENDED SPARE PART

Nº plano / N º plane	Firma	Fecha / Date	Denominación / Denomination: MUEBLE / FITTING	Lamina / Sheet	
C-2907		2011-10	MARMITAS MG9-10 / 9-15/ 9-20 PLUS	1	Fagor Industrial S.Coop. FAGOR Oñate

MOD.	MARMITAS / BOILING PANS	ZONA / ZONE	MUEBLE / FITTING	PLANO DIAGRAM	C-2907

ITEM	CODIGO REFERENCE	DENOMINACION	DENOMINATION	MG9-10 PLUS	MG9-10 PLUS S	MG9-15 PLUS	MG9-15 PLUS S	MG9-20 PLUS	MG9-20 PLUS S			ELIMINADO ELIMINATED	INTRODUCID. INTRODUCED	NOTAS
1	S266122000	CUBA+TAPA G MG9-10 AD	TUB+COVER G MG9-10 AD	1	1	_	_	_	_					
1	S266108000	CUBA+TAPA G MG9-15 AD	TUB+COVER G MG9-15 AD	_	_	1	1	_	_					
1	S266114000	CUBA+TAPA G MG9-20 AD	TUB+COVER G MG9-20 AD	_	_	_	_	1	1					
S/Nº	S266123000	CUBA COMPLETA MG9-10 AD	COMPLETE TUB MG9-10 AD	1	1	_	_	_	_					
S/Nº	S266109000	CUBA COMPLETA MG9-15 AD	COMPLETE TUB MG9-15 AD	_	_	1	1	_	_					
S/Nº	S266115000	CUBA COMPLETA MG9-20 AD	COMPLETE TUB MG9-20 AD	_	_	_	_	1	1					
S/Nº	S266106000	TAPA COMPLETA	COMPLETE COVER	1	1	1	1	1	1					
S/Nº	S016101000	FILTRO DE CUBA	TUB FILTER	1	1	1	1	1	1					
	S036117000	SOPORTE FILTRO	FILTER SUPPORT	2	2	2	2	2	2					
	Q412000000	REMACHE TUBULAR 4x8	TUBULAR RIVET 4x8	8	8	8	8	8	8					
S/Nº	9294600000	MIRILLA CRISTAL	INSPECTION WINDOW	1	1	1	1	1	1					
S/Nº	S312617000	TAPA MIRILLA	INSPECTION WINDOW COVER	1	1	1	1	1	1					
	Q221342000	REMACHE EXAGONAL M5	HEXAGONAL RIVET M5	2	2	2	2	2	2					
	Q012031000	TORNILLO EXAGONAL M5x10 A304	HEXAGONAL BOLT M5x10 A304	2	2	2	2	2	2					
2	X026123000	BISAGRA ADVANCE	HINGE ADVANCE	1	1	1	1	1	1					
3	S266124000	ASA DE TAPA AD	COVER HANDLE AD	1	1	1	1	1	1					
	S262678000	CASQUILLO AMARRE TAPA	BUSHING COVER CAP	2	2	2	2	2	2					
	Q012021000	TORNILLO EXAGONAL M4X10	HEXAGONAL BOLT M4X10	2	2	2	2	2	2					
4	S112803000	CUBIERTA GRIFO MG-900	TAP COVER MG-900	1	1	1	1	_	_					
4	S252804000	CUBIERTA GRIFO MG-920	TAP COVER MG-920	_	_	_	_	1	1					
S/Nº	S112105000	MUELLE SOPORTE CUB. 07003	SPRING COVER SUPPORT 07003	1	1	1	1	1	1					
5	S102125000	GRIFO VACIADO 2"	DRAINAGE TAP 2"	1	1	1	1	1	1					
6	S105403000	ANTERIOR DE MESA 1M	BENCH FRONT 1M	1	_	1	_	1	_					
	Q152004000	TORNILLO APLAST. M5x13 A304	MUSHROOM HEAD BOLT M5x13 A	2	_	2	_	2	_					
	Q302022000	ARANDELA 16x6x1,2 A304	WASHER 16x6x1.2 A304	2	_	2	_	2	_					
7	12006884	PANEL LATERAL DERECHO G900	RIGHT SIDE PANEL G900	1	_	1	_	1	_					
7	12003768	PANEL LATERAL DERECH. G9-00S	RIGHT SIDE PANEL G9-00S	_	1	_	_	_	_					
7	12003773	PANEL LATERAL DERECH. G9-00S	RIGHT SIDE PANEL G9-00S	_	_	_	1	_	1					
S/Nº	12006883	PANEL LATERAL IZQUIERDO G900	LEFT SIDE PANEL G900	1	_	1	_	1	_					
S/Nº	12003767	PANEL LATERAL IZQUIERD. G900S	LEFT SIDE PANEL G900S	_	1	_	_	_	_					
S/Nº	12003772	PANEL LATERAL IZQUIERD. G915S	LEFT SIDE PANEL G915S	_	_	_	1	_	1					

MOD.	MARMITAS / BOILING PANS	ZONA / ZONE	MUEBLE / FITTING	PLANO DIAGRAM	C-2907

ITEM	CODIGO REFERENCE	DENOMINACION	DENOMINATION	MG9-10 PLUS	MG9-10 PLUS S	MG9-15 PLUS	MG9-15 PLUS S	MG9-20 PLUS	MG9-20 PLUS S			ELIMINADO ELIMINATED	INTRODUCID. INTRODUCED	NOTAS
8	S262607000	ESCUADRA INTERIOR MESA 1M	INTERIOR SQUARE TABLE 1M	1	1	1	1	1	1					
9	S162807000	PORTAMANDOS MARMITA 1M	PAN CONTROL HOLDER 1M	1	1	1	1	1	1					
	Q152004000	TORNILLO APLAST. M5x13 A304	MUSHROOM HEAD BOLT M5x13	4	4	4	4	4	4					
	Q151336000	TORNILLO SOPORTE GUIAS	GUIDE SUPPORT BOLT	2	2	2	2	2	2					
	Q302022000	ARANDELA 16x6x1,2 A304	WASHER 16x6x1.2 A304	2	2	2	2	2	2					
	U022836000	ESCUDO FAGOR	FAGOR EMBLEM	1	1	1	1	1	1					
	Q221023000	CLIP SUJECIÓN RÁPIDA Ø 5	RAPID FASTENING CLIP Ø5	2	2	2	2	2	2					
10	S262813000	PANEL FRONTAL MG9-10 AD	FRONT PANEL MG9-10 AD	1	_	_	_	_	_			02.07.12		
10	12045969	PANEL FRONTAL MG9-10 +PERNO	FRONT PANEL MG9-10 +TIEROD	1	_	_	_	_	_				02.07.12	
10	S262814000	PANEL FRONTAL MG9-10S AD	FRONT PANEL MG9-10S AD	_	1	_	_	_	_			02.07.12		
10	12045978	PANEL FRON. MG9-10S AD+PERNO	FRONT PANEL MG9-10S AD+TIER	_	1	_	_	_	_				02.07.12	
10	S262808000	PANEL FRONTAL MG9-10S AD+PER	FRONT PANEL MG9-15 AD	_	_	1	1	_	_			02.07.12		
10	12045996	PANEL FRONTAL MG9-10S AD+PER	FRONT PANEL MG9-15 +TIEROD	_	_	1	1	_	_				02.07.12	
10	S262817000	PANEL FRONTAL MG9-10S AD+PER	FRONT PANEL MG9-20 AD	_	_	_	_	1	1			02.07.12		
10	12046000	PANEL FRONTAL MG9-10S AD+PER	FRONT PANEL MG9-20 +TIEROD	_	_	_	_	1	1				02.07.12	
	Q012042000	TORNILLO EXAGONAL M6x15	HEXAGONAL BOLT M6x15	2	2	2	2	2	2					
	Q302022000	ARANDELA 16x6x1,2 A304	WASHER 16x6x1.2 A304	2	2	2	2	2	2					
S/Nº	12044303	LAGRIMA	IGNITOR WINDON COVER	1	1	1	1	1	1				02.07.12	
S/Nº	12025252	MUELLE 07777	SPRING 07777	3	3	3	3	3	3				02.07.12	
11	12005781	LISTON SOPORTE PATAS ANT. 1M	FRONT LEG SUPPORT STRIP 1M	1	_	1	_	1	_					
12	12007174	ENVOLVENTE MG9-10 AD	ENCLOSUREMG9-10 AD	1	_	_	_	_	_					
12	12007128	ENVOLVENTE MG9-10 S AD	ENCLOSURE MG9-10 S AD	_	1	_	_	_	_					
12	12007173	ENVOLVENTE MG9-15 AD	ENCLOSURE MG9-15 AD	_	_	1	1	_	_					
12	12007164	ENVOLVENTE MG9-20 AD	ENCLOSURE MG9-20 AD	_	_	_	_	1	1					
	Q151323000	TORNILLO BROCA 4.8X16	DRILL BIT SCREW 4.8X16	27	27	27	27	27	27					
13	12005782	LISTON SOPORTE PATAS POS.1M	REAR LEG SUPPORT STRIP 1M	1	_	1	_	1	_					
	Q012042000	TORNILLO EXAGONAL M6x15	HEXAGONAL BOLT M6x15	8	_	8	_	8	_					
	Q302022000	ARANDELA 16x6x1,2 A304	WASHER 16x6x1.2 A304	8	_	8	_	8	_					
	Q232040000	ARANDELA A6	WASHER A6	8	_	8	_	8	_					
14	X260151000	PATA REGULABLE	ADJUSTABLE LEG	4	_	4	_	4	_					
	Q411304000	REMACHE AVIBULB Ø4,8	AVIBULB RIVET Ø4.8	16	_	16	_	16	_					

MOD.	MARMITAS / BOILING PANS	ZONA / ZONE	MUEBLE / FITTING	PLANO DIAGRAM	C-2907

ITEM	CODIGO REFERENCE	DENOMINACION	DENOMINATION	MG9-10 PLUS	MG9-10 PLUS S	MG9-15 PLUS	MG9-15 PLUS S	MG9-20 PLUS	MG9-20 PLUS S			ELIMINADO ELIMINATED	INTRODUCID. INTRODUCED	NOTAS
15	12006993	BASE INFERIOR AD	LOWER BASE AD	1	_	1	_	1	_					
15	12002438	BASE INFERIOR MG900 S AD	LOWER BASE MG900 S AD	_	1	_	_	_	_					
15	12003791	BASE INFERIOR G915 AD	LOWER BASE G915 AD	_	_	_	1	_	1			01,02,12		
15	12041945	BASE INFERIOR G915 AD	LOWER BASE G915 AD	_	_	_	1	_	1				01,02,12	
	Q221343000	REMACHE EXAGONAL M6	HEXAGONAL RIVET M6	2	2	2	2	2	2					
	Q162040000	TUERCA EXAGONAL M6	HEXAGONAL NUT M6	4	_	4	_	4	_					
16	12006842	PANEL POSTERIOR 1M G9-00 AD	REAR PANEL 1M G9-00 AD	1	_	1	_	1	_					
16	12006588	PANEL POSTERIOR 1M G9-10S AD	REAR PANEL 1M G9-10S AD	_	1	_	_	_	_					
16	12006843	PANEL POSTERIOR 1M G9-15 S	REAR PANEL 1M G9-15 S	_	_	_	1	_	1					
	Q419005000	REMACHE 4x8 ALMG3 / ALUMINIO	RIVET 4X8 ALMG3 / ALUMINIUM	8	8	8	8	8	8					
17	S262632000	VIROLA MG900 FG AD	SHELL MG900 FG AD	2	2	2	2	_	_					
17	S262616000	VIROLA MG900 BM AD	SHELL MG900 BM AD	_	_	_	_	2	2					
	Q162040000	TUERCA EXAGONAL M6	HEXAGONAL NUT M6	20	20	20	20	20	20					
	Q302022000	ARANDELA 16x6x1,2 A304	WASHER 16x6x1.2 A304	20	20	20	20	20	20					
18	S262622000	ANTERIOR CHIMENEA MG9-10 AD	FLUEPIPE FRONT MG9-10 AD	1	1	1	1	_	_					
18	S262634000	ANTERI. CHIMENEA MG9-10BM AD	FRONT FLUEPIPE MG9-10BM AD	_	_	_	_	1	1					
S/Nº	S262621000	POSTERIOR CHIMENEA MG9-10 AD	REAR FLUEPIPE MG9-10 AD	1	1	1	1	_	_					
S/Nº	S262633000	POSTERI. CHIMENEA MG9-10BM AD	REAR FLUEPIPE MG9-10BM AD	_	_	_	_	1	1					
19	R205439000	SOPORTE EMBELLECEDOR 1M	TRIM SUPPORT 1M	1	1	1	1	1	1					
20	R205425000	EMBELLECEDOR ESMALTE	ENAMEL TRIM	2	2	2	2	2	2					

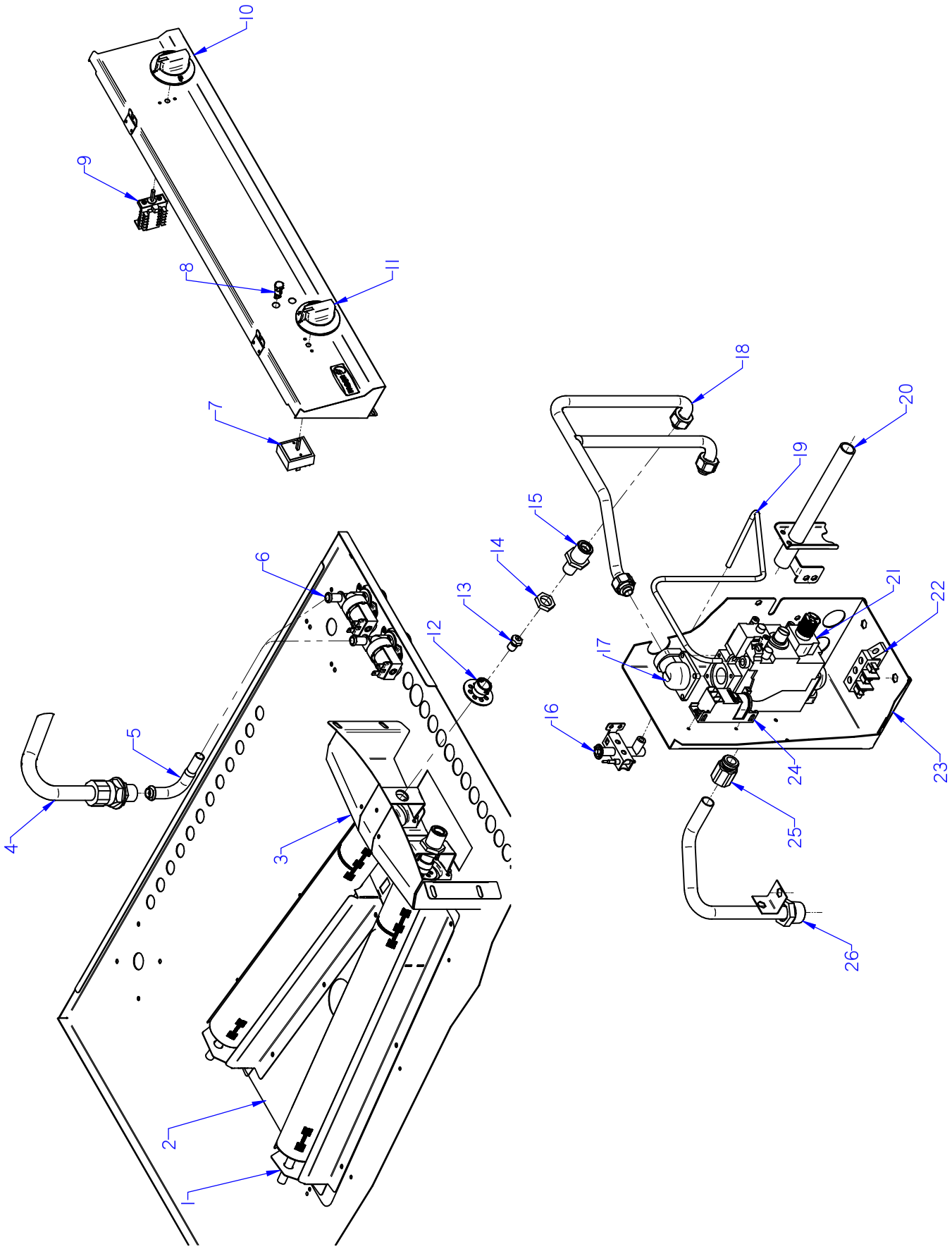

ITEM MARCADO EN COLOR = REPUESTO RECOMENDADO
COLOURED ITEM = RECOMMENDED SPARE PART

Nº plano / N º plane	Firma	Fecha / Date	Denominación / Denomination: PARTE FUNCIONAL / FUNCTIONAL PART	Lamina / Sheet	
C-2908		2011-10	MARMITAS MG9-10 / 9-15 / 9-20 PLUS	2	Fagor Industrial S.Coop. FAGOR Oñate

MOD.	MARMITAS / BOILING PANS	ZONA / ZONE	PARTE FUNCIONAL / FUNCTIONAL PART	PLANO DIAGRAM	C-2908

ITEM	CODIGO REFERENCE	DENOMINACION	DENOMINATION	MG9-10 PLUS	MG9-15 PLUS	MG9-20 PLUS						ELIMINADO ELIMINATED	INTRODUCID. INTRODUCED	NOTAS
1	S225701000	QUEMADOR DE POLIDORO MG900	POLIDORO BURNER MG900	2	2	2						30,09,12		
1	12044878	QUEMADOR DE POLIDORO	POLIDORO BURNER	2	2	2							30,09,12	
S/Nº	12043764	PORTATOBERAS QUEMADOR MAR	BURNER NOZZLE HOLDER	2	2	2							30,09,12	
	Q012021000	TORNILLO EXAGONAL M4x10 A304	HEXAGONAL BOLT M4x10 A304	8	8	8								
2	S262666000	BASE QUEMADOR MG9-10 AD	BURNER BASE MG-910 AD	1	_	_								
2	S262631000	BASE QUEMADOR MG9-15 AD	BURNER BASE MG-915 AD	_	1	_								
2	S262609000	BASE QUEMADOR MG9-10BM AD	BURNER BASE MG9-10BM AD	_	_	1								
	Q419005000	REMACHE 4x8 ALMG3 / ALUMINIO	RIVET 4X8 ALMG3 / ALUMINIUM	_	10	10								
S/Nº	S262611000	DEFLECTOR DCHO. QUEMADOR AI	RIGHT DEFLECTOR BURNER AD	1	1	1								
S/Nº	S262612000	DEFLECTOR IZDO. QUEMADOR AD	LEFT DEFLECTOR BURNER AD	1	1	1								
3	S262667000	FRONTAL QUEMADOR MG9-10 AD	BURNER FRONT MG9-10 AD	1	_	_						02.05.12		
3	12044771	FRONTAL QUEMADOR MG9-10	BURNER FRONT MG9-10	1	_	_							02.05.12	
3	S262625000	FRONTAL QUEMADOR MG9-15 AD	BURNER FRONT MG9-15 AD	_	1	_						02.05.12		
3	12044767	FRONTAL QUEMADOR MG9-15	BURNER FRONT MG9-15	_	1								02.05.12	
3	S262617000	FRONTAL QUEMADOR MG9-20 AD	BURNER FRONT MG9-20 AD	_	_	1						02.05.12		
3	12043846	FRONTAL QUEMADOR MG9-20	BURNER FRONT MG9-20	_	_	1							02.05.12	
	Q221342000	REMACHE EXAGONAL M5	HEXAGONAL RIVET M5	2	2	2								
	Q221341000	REMACHE EXAGONAL M4	HEXAGONAL RIVET M4	8	8	8								
4	S052100000	TUBO LLENADO 01102113	FILLER PIPE 01102113	1	1	1								
5	S565027000	TUBO ENTRADA TUBO LLENADO	INTAKE PIPE FILLER PIPE	1	1	1								
	Q306024000	JUNTA18X12.5X1.5	SEAL 18X12.5X1.5	1	1	1								
	Q223010000	TUERCA 1/2 GAS	NUT 1/2 GAS	1	1	1								
S/Nº	3676900000	TUBO GOMA NEGRA Ø 17*10	BLACK RUBBER PIPE 17*10	3	3	3								
	Q881308000	ABRAZADERA 8-14L	CLAMP 8-14L	6	6	6								
S/Nº	Z201106000	RACORD EN Y	Y-CONNECTION	1	1	1								
6	Z701135000	ELECTROVALVULA SIMP. 220V	SIMPLE SOLENOID VALVE 220V	2	2	2								
	Z601156000	REGULADOR 8L RO. 254.034	REGULATOR 8L RED 254.034	2	2	2						11.09.11		
	Q032021000	TORNILLO ALOMADO M4X10	CURVED SCREW M4X10	4	4	4								
7	S333001000	REGULADOR DE ENERGIA	ENERGY REGULATOR	1	1	1								
S/Nº	R052102000	JUNTA COMPONENT. ELECTRICOS	BOARD OF ELECTRICAL COMP.	1	1	1								

MOD.	MARMITAS / BOILING PANS	ZONA / ZONE	PARTE FUNCIONAL / FUNCTIONAL PART	PLANO DIAGRAM	C-2908

ITEM	CODIGO REFERENCE	DENOMINACION	DENOMINATION	MG9-10 PLUS	MG9-15 PLUS	MG9-20 PLUS						ELIMINADO ELIMINATED	INTRODUCID. INTRODUCED	NOTAS
8	R693056000	PILOTO AMBAR 41227000A4	AMBER PILOT 41227000A4	1	1	1						01.02.13		
8	12024669	PILOTO AMBAR Ø18	AMBER PILOT Ø18	1	1	1							01.02.13	
S/Nº	R693055000	PILOTO VERDE 41227000C7	GREEN PILOT 41227000C7	1	1	1						01.02.13		
S/Nº	12047390	PILOTO VERDE 230V AC 8KW 16MM	GREEN PILOT 230V AC 8KW 16MI	1	1	1							01.02.13	
9	R693004000	CONMUTADOR DE FUNCIONES	FUNCTIONS SWITCH	1	1	1								
S/Nº	R052102000	JUNTA COMPONENT. ELECTRICOS	BOARD OF ELECTRICAL COMP.	1	1	1								
10	S142105000	MANDO AGUA MARMITA FG(08)	WATER PAN CONTROL FG(08)	1	1	1								
11	S162102000	BOTON DE MANDO	CONTROL BUTTON	1	1	1								
11	S162102000	BOTON DE MANDO	CONTROL BUTTON	1	1	1								
12	X505013000	REGULADOR DE AIRE POLIDORO	POLIDORO AIR CONTROL	2	2	2								
	Q012021000	TORNILLO EXAGONAL M4x10 A304	HEXAGONAL BOLT M4x10 A304	2	2	2								
13	9105100000	TOBERA Ø 1.50 BUT-PROPANO	NOZZLE Ø 1.50 BUT-PROPANE	2	_	_								
13	U134401000	TOBERA Ø 2,20 GAS NATURAL	NOZZLE Ø 2.20 GAS NATURAL	2	_	_								
13	N502401000	TOBERA Ø 1.70 BUT-PROPANO	NOZZLE Ø 1.70 BUT-PROPANE	_	2	2								
13	S222401000	TOBERA Ø 2,55 GAS NATURAL	NOZZLE Ø 2.55 GAS NATURAL	_	2	2								
14	Q223019000	TUERCA 3/8 GAS LATÓN	NUT 3/8 GAS BRASS	2	2	2								
15	X505724000	MANGUITO PORTATOBERAS	NOZZLE HOLDER SLEEVE	2	2	2								
16	U322118000	PILOTO COMPLETO BP 100.062	COMPL. PILOT BP 100.062	1	1	1								
	U442137000	INYECTOR Ø 0,4 (GAS NATURAL)	NOZZLE Ø 0.4 (GAS NATURAL)	1	1	1								
	Q221342000	REMACHE EXAGONAL M5	HEXAGONAL RIVET M5	2	2	2								
	Q012031000	TORNILLO EXAGON. M5x10 A304	HEXAGONAL BOLT. M5x10 A304	2	2	2								
	X022131000	BUJIA	SPARK PLUG	1	1	1								
S/Nº	U562130000	TERMOPAR L=850	THERMOCOUPLE L=850	1	1	1								
	U264301000	RACORD EMPALME TERMOPAR	THERMOC. JUNCTION RACORD	1	1	1								
17	X153004000	CODO 1-2 820NOV 906.260	ELBOW 1-2 820NOV 906,260	2	2	2								
18	S265025000	CONDUCC. QUEMADOR MG9-10 AD	PIPING TO BURNER MG9-10 AD	1	_	_								
18	S265004000	CONDUCC. QUEMADOR MG AD	PIPING TO BURNER MG AD	_	1	1								
	Q306024000	JUNTA 18X12.5X1.5	SEAL 18x12.5x1.5	3	3	3								
S/Nº	S205023000	MANGUITO DOBLE 1/2	DOUBLE SLEEVE 1/2	1	1	1								

MOD.	MARMITAS / BOILING PANS	ZONA / ZONE	PARTE FUNCIONAL / FUNCTIONAL PART	PLANO DIAGRAM	C-2908

ITEM	CODIGO REFERENCE	DENOMINACION	DENOMINATION	MG9-10 PLUS	MG9-15 PLUS	MG9-20 PLUS						ELIMINADO ELIMINATED	INTRODUCID. INTRODUCED	NOTAS
19	S265026000	TUBO PILOTO MG9-10 AD	PILOT PIPE MG9-10 AD	1	_	_						02.05.12		
19	12044803	SUPERIOR TUBO PILOTO MG9-10	PILOT PIPE TOP-10 MG9-10 AD	1	_	_							02.05.12	
19	12044811	INFER. PILOTO COMPL MG9-10	PILOT PIPE LOWER MG9-10	1	_	_							02.05.12	
19	S265016000	TUBO PILOTO MG9-15 AD	PILOT PIPE MG9-15 AD	_	1	_						02.05.12		
19	12044825	SUPERIOR TUBO PILOTO MG9-15	PILOT PIPE TOP-10 MG9-15 AD	_	1	_							02.05.12	
19	12044811	INFER. PILOTO COMPL MG9-10	PILOT PIPE LOWER MG9-10	_	1	_							02.05.12	
19	S265006000	TUBO PILOTO MG9-120 AD	PILOT PIPE MG9-20 AD	_	_	1						02.05.12		
19	12044861	SUPERIOR TUBO PILOTO MG9-20	PILOT PIPE TOP-10 MG9-20 AD	_	_	1							02.05.12	
19	12044860	INFER. PILOTO COMPL MG9-20	PILOT PIPE LOWER MG9-20	_	_	1							02.05.12	
	U134323000	RACORD BICONO Ø 6 958.031	BICONE CONNECTION Ø 6 958.0	2	2	2								
20	S265012000	TUBO ENCENDIDO COMPLETO	COMPLETE IGNITION PIPE	1	1	1								
20	12043851	TUBO ENCENDIDO COMP. MG-900	COMPLETE IGNITION PIPE MG-90	1	1	1							02.05.12	
S/Nº	12043814	AMARRE PILOTO MARMITAS	TIE PILOT BOILING	1	1	1							02.05.12	
S/Nº	X082831000	TAPA TUBO ENCENDIDO COMPLET	FULL COVER ON TUBE	1	1	1								
21	12097292	VALVULA NOVA 820 REGULADA	VALVE REGULATED NOVA 820	1	1	1								
21	12024777	ELECTROVALV. 820 NOVA 60 Hz.	SOLENOID VALVE. 820 NOVA 60	1	1	1								
S/Nº	X163009000	JUNTA CON. NOVA 960.104	SEAL NOVA 820.018	1	1	1						11.09.12		
22	U183046000	REGLETA AUXILIAR	STRIP AUXILIARY	1	1	1								
	Q221342000	REMACHE EXAGONAL M5	HEXAGONAL RIVET M5	2	2	2								
	Q152004000	TORNILLO EXAGONAL M5X13 A304	HEXAGONAL BOLT M5X13 A304	2	2	2								
23	S262602000	CUADRO ELECTRIC MG AD	ELECTRIC TABLE MG AD	1	1	1								
24	X163014000	ENCENDEDOR PARA 2 BUJIAS	LIGHTER FOR 2 PLUGS	1	1	1								
25	X012104000	MANGUITO DOBLE 1/2 958.027	DOUBLE SLEEVE 1/2 958.027	1	1	1								
	X012105000	BICONO Ø 16 957.008	BICONE Ø 16 957.008	1	1	1								
26	12010455	CONDU. GRAL. MARMITAS G900 AD	GEN. PIPE PANS. G900 AD	1	1	1								
	Q221342000	REMACHE EXAGONAL M5	HEXAGONAL RIVET M5	1	1	1								
S/Nº	Z602121000	MANGUERA ENTRADA AGUA	WATER INTAKE HOSE	2	2	2								

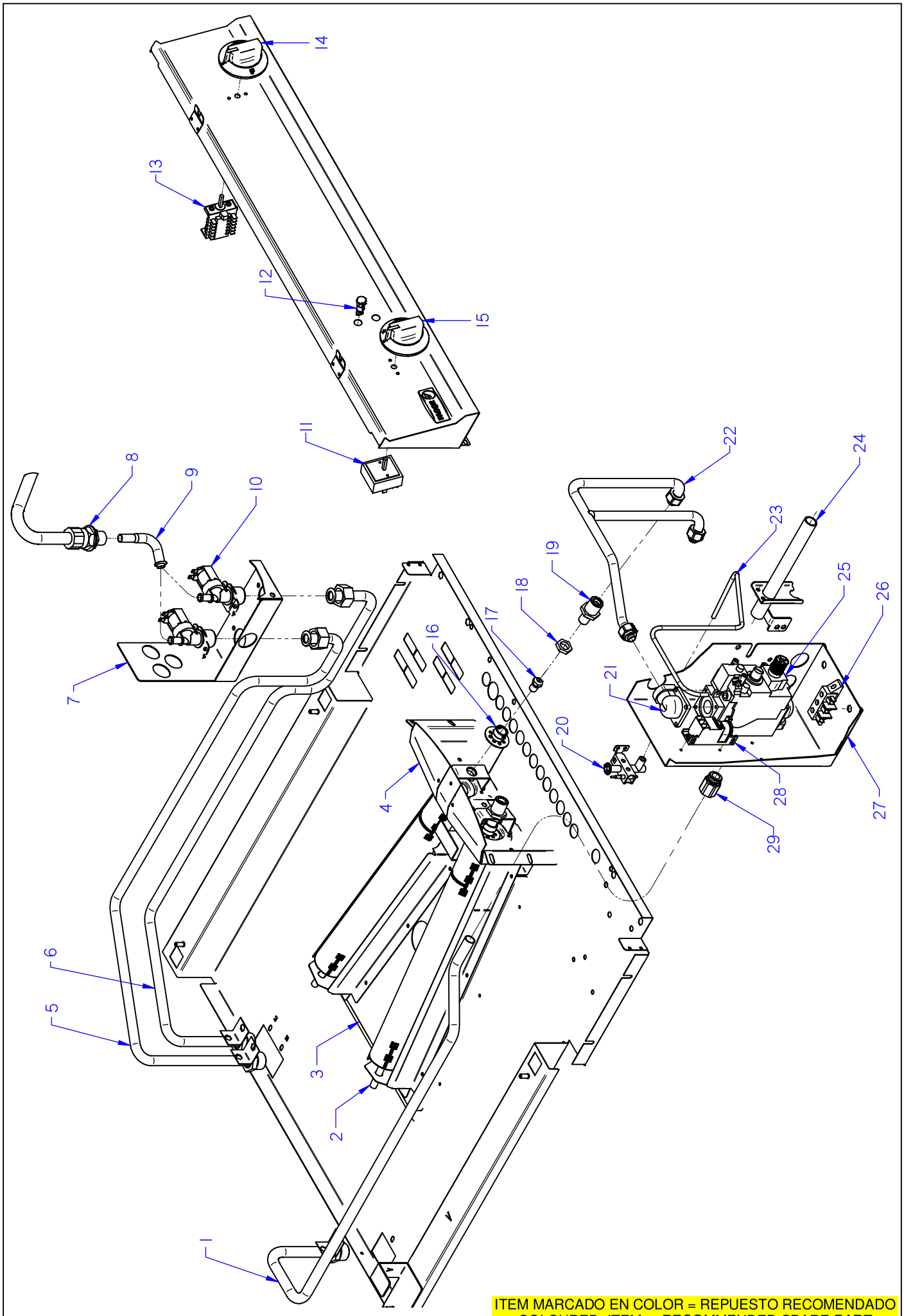

ITEM MARCADO EN COLOR = REPUESTO RECOMENDADO
COLOURED ITEM = RECOMMENDED SPARE PART

Nº plano / N º plane	Firma	Fecha / Date	Denominación / Denomination: PARTE FUNCIONAL / FUNCTIONAL PART	Lamina / Sheet	
C-2908a		2011-10	MARMITAS MG9-10/ 9-15/ 9-20 PLUS S	2	Fagor Industrial S.Coop. FAGOR Oñate

MOD.	MARMITAS / BOILING PANS	ZONA / ZONE	PARTE FUNCIONAL / FUNCTIONAL PART	PLANO DIAGRAM	C-2908a

ITEM	CODIGO REFERENCE	DENOMINACION	DENOMINATION	MG9-10 PLUS S	MG9-15 PLUS S	MG9-20 PLUS S						ELIMINADO ELIMINATED	INTRODUCID. INTRODUCED	NOTAS
1	12008847	COND. GRAL. MARMITAS S AD	GEN. PIPE PANSS AD	1	1	1						01.02.12		
1	12041948	COND. GRAL. MARMITAS S AD	GEN. PIPE PANSS AD	1	1	1							01.02.12	
S/Nº	Z602121000	MANGUERA ENTRADA AGUA	WATER INTAKE HOSE	2	2	2								
2	S225701000	QUEMADOR DE POLIDORO MG900	POLIDORO BURNER MG900	2	2	2						30,09,12		
2	12044878	QUEMADOR DE POLIDORO	POLIDORO BURNER	2	2	2							30,09,12	
S/Nº	12043764	PORTATOBERAS QUEMADOR MAR	BURNER NOZZLE HOLDER	2	2	2							30,09,12	
	Q012021000	TORNILLO EXAGONAL M4x10 A304	HEXAGONAL BOLT M4x10 A304	8	8	8								
3	12005833	BASE QUEMADOR MG-910 S AD	BURNER BASE MG-910 S AD	1	_	_								
3	S262631000	BASE QUEMADOR MG9-15 AD	BURNER BASE MG-915 AD	_	1	_								
3	S262609000	BASE QUEMADOR MG9-10BM AD	BURNER BASE MG9-10BM AD	_	_	1								
	Q419005000	REMACHE 4x8 ALMG3 / ALUMINIO	RIVET 4X8 ALMG3 / ALUMINIUM	10	10	10								
S/Nº	S262611000	DEFLECTOR DCHO. QUEMADOR A	RIGHT DEFLECTOR BURNER AD	1	1	1								
S/Nº	S262612000	DEFLECTOR IZDO. QUEMADOR AD	LEFT DEFLECTOR BURNER AD	1	1	1								
4	S262667000	FRONTAL QUEMADOR MG9-10 AD	BURNER FRONT MG9-10 AD	1	_	_						02.05.12		
4	12044771	FRONTAL QUEMADOR MG9-10	BURNER FRONT MG9-10	1	_	_							02.05.12	
4	S262625000	FRONTAL QUEMADOR MG9-15 AD	BURNER FRONT MG9-15 AD	_	1	_						02.05.12		
4	12044767	FRONTAL QUEMADOR MG9-15	BURNER FRONT MG9-15		1								02.05.12	
4	S262617000	FRONTAL QUEMADOR MG9-20 AD	BURNER FRONT MG9-20 AD	_	_	1						02.05.12		
4	12043846	FRONTAL QUEMADOR MG9-20	BURNER FRONT MG9-20	_	_	1							02.05.12	
5	12041956	CONDUCCION AGUA FRIA AD	COLD WATER PIPE AD	1	1	1							01.02.12	
6	12041959	CONDUCCION AGUA CALIENTE	HOT WATER PIPE	1	1	1							01.02.12	
S/Nº	12010191	JUNTA TUBO 14X24X3	SEAL PIPE 14X24X3	2	2	2							02,04.12	
7	12041964	CAJA ELECTROVALVULAS AD	SOLENOID BOX AD	1	1	1							01.02.12	
8	S052100000	TUBO LLENADO 01102113	FILLER PIPE 01102113	1	1	1								
9	S565027000	TUBO ENTRADA TUBO LLENADO	INTAKE PIPE FILLER PIPE	1	1	1								
	Q306024000	JUNTA18X12.5X1.5	SEAL 18X12.5X1.5	1	1	1								
	Q223010000	TUERCA 1/2 GAS	NUT 1/2 GAS	1	1	1								
S/Nº	3676900000	TUBO GOMA NEGRA Ø 17*10	BLACK RUBBER PIPE 17*10	3	3	3								
	Q881308000	ABRAZADERA 8-14L	CLAMP 8-14L	6	6	6								
S/Nº	Z201106000	RACORD EN Y	Y-CONNECTION	1	1	1								

MOD.	MARMITAS / BOILING PANS	ZONA / ZONE	PARTE FUNCIONAL / FUNCTIONAL PART	PLANO DIAGRAM	C-2908a

ITEM	CODIGO REFERENCE	DENOMINACION	DENOMINATION	MG9-10 PLUS S	MG9-15 PLUS S	MG9-20 PLUS S						ELIMINADO ELIMINATED	INTRODUCID. INTRODUCED	NOTAS
10	12025161	ELECTROVALVULA SIMP. 220V	SIMPLE SOLENOID VALVE 220V	2	2	2								
	Q032021000	TORNILLO ALOMADO M4X10	CURVED SCREW M4X10	4	4	4								
11	S333001000	REGULADOR DE ENERGIA	ENERGY REGULATOR	1	1	1								
S/Nº	R052102000	JUNTA COMPONENT. ELECTRICOS	BOARD OF ELECTRICAL COMP.	1	1	1								
12	R693056000	PILOTO AMBAR 41227000A4	AMBER PILOT 41227000A4	1	1	1						01.02.13		
12	12024669	PILOTO AMBAR Ø18	AMBER PILOT Ø18	1	1	1							01.02.13	
S/Nº	R693055000	PILOTO VERDE 41227000C7	GREEN PILOT 41227000C7	1	1	1						01.02.13		
S/Nº	12047390	PILOTO VERDE 230V AC 8KW 16MM	GREEN PILOT 230V AC 8KW 16MI	1	1	1							01.02.13	
13	R693004000	CONMUTADOR DE FUNCIONES	FUNCTIONS SWITCH	1	1	1								
S/Nº	R052102000	JUNTA COMPONENT. ELECTRICOS	BOARD OF ELECTRICAL COMP.	1	1	1								
14	S142105000	MANDO AGUA MARMITA FG(08)	WATER PAN CONTROL FG(08)	1	1	1								
15	S162102000	BOTON DE MANDO	CONTROL BUTTON	1	1	1								
16	X505013000	REGULADOR DE AIRE POLIDORO	POLIDORO AIR CONTROL	2	2	2								
	Q012021000	TORNILLO EXAGONAL M4x10 A304	HEXAGONAL BOLT M4x10 A304	2	2	2								
17	9105100000	TOBERA Ø 1.50 BUT-PROPANO	NOZZLE Ø 1.50 BUT-PROPANE	2	_	_								
17	U134401000	TOBERA Ø 2,20 GAS NATURAL	NOZZLE Ø 2.20 GAS NATURAL	2	_	_								
17	N502401000	TOBERA Ø 1.70 BUT-PROPANO	NOZZLE Ø 1.70 BUT-PROPANE	_	2	2								
17	S222401000	TOBERA Ø 2,55 GAS NATURAL	NOZZLE Ø 2.55 GAS NATURAL	_	2	2								
18	Q223019000	TUERCA 3/8 GAS LATÓN	NUT 3/8 GAS BRASS	2	2	2								
19	X505724000	MANGUITO PORTATOBERAS	NOZZLE HOLDER SLEEVE	2	2	2								
20	U322118000	PILOTO COMPLETO BP 100.062	COMPL. PILOT BP 100.062	1	1	1								
	U442137000	INYECTOR Ø 0,4 (GAS NATURAL)	NOZZLE Ø 0.4 (GAS NATURAL)	1	1	1								
	Q012031000	TORNILLO EXAGON. M5x10 A304	HEXAGONAL BOLT. M5x10 A304	2	2	2								
	X022131000	BUJIA	SPARK PLUG	1	1	1								
S/Nº	U562130000	TERMOPAR L=850	THERMOCOUPLE L=850	1	1	1								
	U264301000	RACORD EMPALME TERMOPAR	THERMOC. JUNCTION RACORD	1	1	1								
21	X153004000	CODO 1-2 820NOV 906.260	ELBOW 1-2 820NOV 906,260	2	2	2								
22	12010459	CONDUC. QUEMADOR 9-10 S AD	PIPING TO BURNER 9-10 S AD	1	_	_								
22	S265004000	CONDUCC. QUEMADOR MG AD	PIPING TO BURNER MG AD	_	1	1								
	Q306024000	JUNTA 18X12.5X1.5	SEAL 18x12.5x1.5	3	3	3								
S/Nº	S205023000	MANGUITO DOBLE 1/2	DOUBLE SLEEVE 1/2	1	1	1								

MOD.	MARMITAS / BOILING PANS	ZONA / ZONE	PARTE FUNCIONAL / FUNCTIONAL PART	PLANO DIAGRAM	C-2908a

ITEM	CODIGO REFERENCE	DENOMINACION	DENOMINATION	MG9-10 PLUS S	MG9-15 PLUS S	MG9-20 PLUS S						ELIMINADO ELIMINATED	INTRODUCID. INTRODUCED	NOTAS
23	S265030000	TUBO PILOTO MG9-10 S AD	PILOT PIPE MG9-10 S AD	1	_	_						02.05.12		
23	12044813	SUPERIOR T. PILOTO MG9-10 S AD	PILOT PIPE TOP-10 MG9-10 S AD	1	_	_							02.05.12	
23	12044811	INFER. PILOTO COMPL MG9-10	PILOT PIPE LOWER MG9-10	1	_	_							02.05.12	
23	S265016000	TUBO PILOTO MG9-15 AD	PILOT PIPE MG9-15 AD	_	1	_						02.05.12		
23	12044825	SUPERIOR TUBO PILOTO MG9-15	PILOT PIPE TOP-10 MG9-15 AD	_	1	_							02.05.12	
23	12044811	INFER. PILOTO COMPL MG9-10	PILOT PIPE LOWER MG9-10	_	1	_							02.05.12	
23	S265006000	TUBO PILOTO MG9-120 AD	PILOT PIPE MG9-20 AD	_	_	1						02.05.12		
23	12044861	SUPERIOR TUBO PILOTO MG9-20	PILOT PIPE TOP-10 MG9-20 AD	_	_	1							02.05.12	
23	12044860	INFER. PILOTO COMPL MG9-20	PILOT PIPE LOWER MG9-20	_	_	1							02.05.12	
	U134323000	RACORD BICONO Ø 6 958.031	BICONE CONNECTION Ø 6 958.0	2	2	2								
24	S265012000	TUBO ENCENDIDO COMPLETO	COMPLETE IGNITION PIPE	1	1	1								
24	12043851	TUBO ENCENDIDO COMP. MG-900	COMPLETE IGNITION PIPE MG-90	1	1	1							02.05.12	
S/Nº	12043814	AMARRE PILOTO MARMITAS	TIE PILOT BOILING	1	1	1							02.05.12	
S/Nº	X082831000	TAPA TUBO ENCENDIDO COMPLET	FULL COVER ON TUBE	1	1	1								
25	12097292	VALVULA NOVA 820 REGULADA	VALVE REGULATED NOVA 820	1	1	1								
25	12024777	ELECTROVALV. 820 NOVA 60 Hz.	SOLENOID VALVE. 820 NOVA 60	1	1	1								
S/Nº	X163009000	JUNTA CON. NOVA 960.104	SEAL NOVA 820.018	1	1	1						11.09.12		
26	U183046000	REGLETA AUXILIAR	STRIP AUXILIARY	1	1	1								
	Q221342000	REMACHE EXAGONAL M5	HEXAGONAL RIVET M5	2	2	2								
	Q152004000	TORNILLO EXAGONAL M5X13 A304	HEXAGONAL BOLT M5X13 A304	2	2	2								
27	12005780	CUADRO ELECTRIC MG AD	ELECTRIC TABLE MG AD	1	1	1								
28	X163014000	ENCENDEDOR PARA 2 BUJIAS	LIGHTER FOR 2 PLUGS	1	1	1								
29	X012104000	MANGUITO DOBLE 1/2 958.027	DOUBLE SLEEVE 1/2 958.027	1	1	1								
	X012105000	BICONO Ø 16 957.008	BICONE Ø 16 957.008	1	1	1								

MOD.	MARMITAS / BOILING PANS	ZONA / ZONE	VARIOS / MISCELLANEOUS	PLANO DIAGRAM	

ITEM	CODIGO REFERENCE	DENOMINACION	DENOMINATION	MG9-10 PLUS	MG9-10 PLUS S	MG9-15 PLUS	MG9-15 PLUS S	MG9-20 PLUS	MG9-20 PLUS S			ELIMINADO ELIMINATED	INTRODUCID. INTRODUCED	NOTAS
	S206501000	FOLLETO DE INSTRUCCIONES	INSTRUCTION LEAFLET	1	1	1	1	1	1					
	S263009000	ESQUEMA TEORICO MG910 AD	THEOR. DIAGRAM LABEL MG910	1	1	1	1	1	1					PLANO HC-82952
	S263010000	PLANO DE MONTAJE MG910 AD	ASSEMBLY PLAN MG910 AD	1	1	1	1	1	1					PLANO HC-82953
	X163002000	CABLE BUJIA	SPARK PLUG CABLE	1	1	1	1	1	1					
	X163008000	CABLE CON. 820 960.103	CON. 820 960.103 CABLE	1	1	1	1	1	1			12,09,12		
	12046785	CABL. VALVULA GAS NOVA 960.01	WIRING NOVA GAS VALVE 960 01	1	1	1	1	1	1				12,09,12	
	R275027000	CABLEADO ELECTROS. 927.012	ELECTRICAL 927.012 WIRING	1	1	1	1	1	1					
	U323007000	CABLE ENCENDEDOR A BUJIA	LIGHTER TO SPARK PLUG CAB.	1	1	1	1	1	1					
	S263008000	INSTALACION ELECTR. MG910 AD	ELE INSTALLATION MG910 AD	1	1	1	1	1	1					
	12046142	CABLEAD.TENSOR PORTAMANDO	CONTROL HOLDER WIRING TEN	1	1	1	1	1	1				01.10.12	
	12023746	CABLE ALIMENTACION	POWER WIRING	1	1	1	1	1	1				19.11.12	

MOD.	MARMITAS / BOILING PANS	ZONA / ZONE	REPUESTOS RECOMENDADOS RECOMMENDED SPARE PART	PLANO DIAGRAM	

ITEM	CODIGO REFERENCE	DENOMINACION	DENOMINATION	MG9-10 PLUS	MG9-10 PLUS S	MG9-15 PLUS	MG9-15 PLUS S	MG9-20 PLUS	MG9-20 PLUS S			ELIMINADO ELIMINATED	INTRODUCID. INTRODUCED	NOTAS
2	X026123000	BISAGRA ADVANCE	HINGE ADVANCE	1	1	1	1	1	1					C-2907
5	S102125000	GRIFO VACIADO 2"	DRAINAGE TAP 2"	1	1	1	1	1	1					C-2907
6	Z701135000	ELECTROVALVULA SIMP. 220V	SIMPLE SOLENOID VALVE 220V	2	_	2	_	2	_					C-2908
7	S333001000	REGULADOR DE ENERGIA	ENERGY REGULATOR	1	_	1	_	1	_					C-2908
8	12024669	PILOTO AMBAR Ø18	AMBER PILOT Ø18	1	_	1	_	1	_				01.02.13	C-2908
S/Nº	12047390	PILOTO VERDE 230V AC 8KW 16MM	GREEN PILOT 230V AC 8KW 16MI	1	_	1	_	1	_				01.02.13	C-2908
9	R693004000	CONMUTADOR DE FUNCIONES	FUNCTIONS SWITCH	1	_	1	_	1	_					C-2908
16	U322118000	PILOTO COMPLETO BP 100.062	COMPL. PILOT BP 100.062	1	_	1	_	1	_					C-2908
	U442137000	INYECTOR Ø 0,4 (GAS NATURAL)	NOZZLE Ø 0.4 (GAS NATURAL)	1	_	1	_	1	_					C-2908
	X022131000	BUJIA	SPARK PLUG	1	_	1	_	1	_					C-2908
S/Nº	U562130000	TERMOPAR L=850	THERMOCOUPLE L=850	1	_	1	_	1	_					C-2908
21	12097292	VALVULA NOVA 820 REGULADA	VALVE REGULATED NOVA 820	1	_	1	_	1	_					C-2908
21	12024777	ELECTROVALV. 820 NOVA 60 Hz.	SOLENOID VALVE. 820 NOVA 60 I	1	_	1	_	1	_					C-2908
24	X163014000	ENCENDEDOR PARA 2 BUJIAS	LIGHTER FOR 2 PLUGS	1	_	1	_	1	_					C-2908
10	12025161	ELECTROVALVULA SIMP. 220V	SIMPLE SOLENOID VALVE 220V	_	2	_	2	_	2					C-2908a
11	S333001000	REGULADOR DE ENERGIA	ENERGY REGULATOR	_	1	_	1	_	1					C-2908a
12	12024669	PILOTO AMBAR Ø18	AMBER PILOT Ø18	_	1	_	1	_	1				01.02.13	C-2908a
S/Nº	12047390	PILOTO VERDE 230V AC 8KW 16MM	GREEN PILOT 230V AC 8KW 16MI	_	1	_	1	_	1				01.02.13	C-2908a
13	R693004000	CONMUTADOR DE FUNCIONES	FUNCTIONS SWITCH	_	1	_	1	_	1					C-2908a
20	U322118000	PILOTO COMPLETO BP 100.062	COMPL. PILOT BP 100.062	_	1	_	1	_	1					C-2908a
	U442137000	INYECTOR Ø 0,4 (GAS NATURAL)	NOZZLE Ø 0.4 (GAS NATURAL)	_	1	_	1	_	1					C-2908a
	X022131000	BUJIA	SPARK PLUG	_	1	_	1	_	1					C-2908a
S/Nº	U562130000	TERMOPAR L=850	THERMOCOUPLE L=850	_	1	_	1	_	1					C-2908a
25	12097292	VALVULA NOVA 820 REGULADA	VALVE REGULATED NOVA 820	_	1	_	1	_	1					C-2908a
25	12024777	ELECTROVALV. 820 NOVA 60 Hz.	SOLENOID VALVE. 820 NOVA 60 I	_	1	_	1	_	1					C-2908a
28	X163014000	ENCENDEDOR PARA 2 BUJIAS	LIGHTER FOR 2 PLUGS	_	1	_	1	_	1					C-2908a

MG - 710BM MG - 910BM MG - 915BM

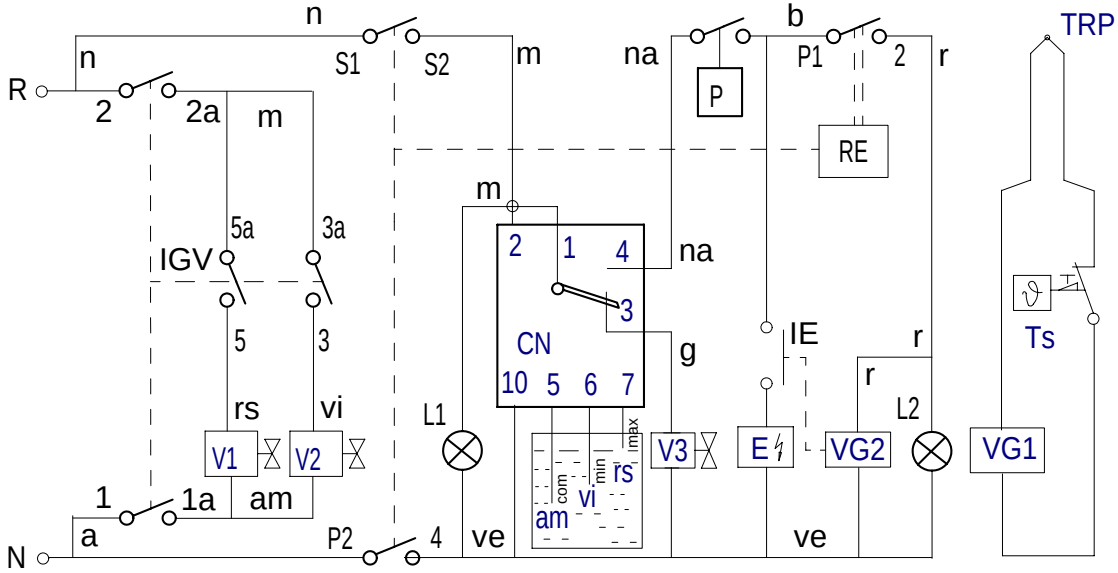

POSICION	% ±2%	P1 - 2 TON	P1 - 2 TON+TOF	P2 - 4	S1 - S2
0	0	0	∞		
52°	6%	3"	45"	X	X
84°	10%	4"	38"	X	X
116°	15%	5"	32"	X	X
148°	25%	7"	29"	X	X
180°	30%	9"	30"	X	X
212°	40%	13"	32"	X	X
244°	55%	21"	37"	X	X
276°	75%	45"	60"	X	X
308°	100%	∞	∞	X	X

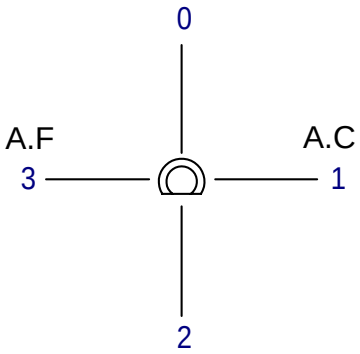

POSICION DIBUJADA 0

IGV	1 1a	2 2a	3 3a	4 4a	5 5a	6 6a
0						
1	X	X			X	X
2	X	X		X		X
3	X	X	X	X		

S263009000

	Esquema teorico ME-710BM, ME-910BM		S263009000		
Nº	Pieza	Material	Nº Clasificacion	Acabado	
Nº	Modificacion	Propuesta de	Fecha	Tolerancias generales	
				<5± :	50–100± :
				5–25± :	>100±
				25–50± :	∝±

	Firma	Fecha
Dibujado	M.Maillo	30-06-2010
Proyectado	M.Maillo	30-06-2010
Comprobado	ENERITZ	30-06-2010
Escala		

FAGOR

Fagor Industrial,Koop.Elk, Mugatua

Mecanizado superficial

MARMITA ELECTRICA

Plano numero
HC - 82952

Sustituye al N°

Sustituido por

Plano hau ez daiteke erabili ez berrizta gure baimenitz gabe

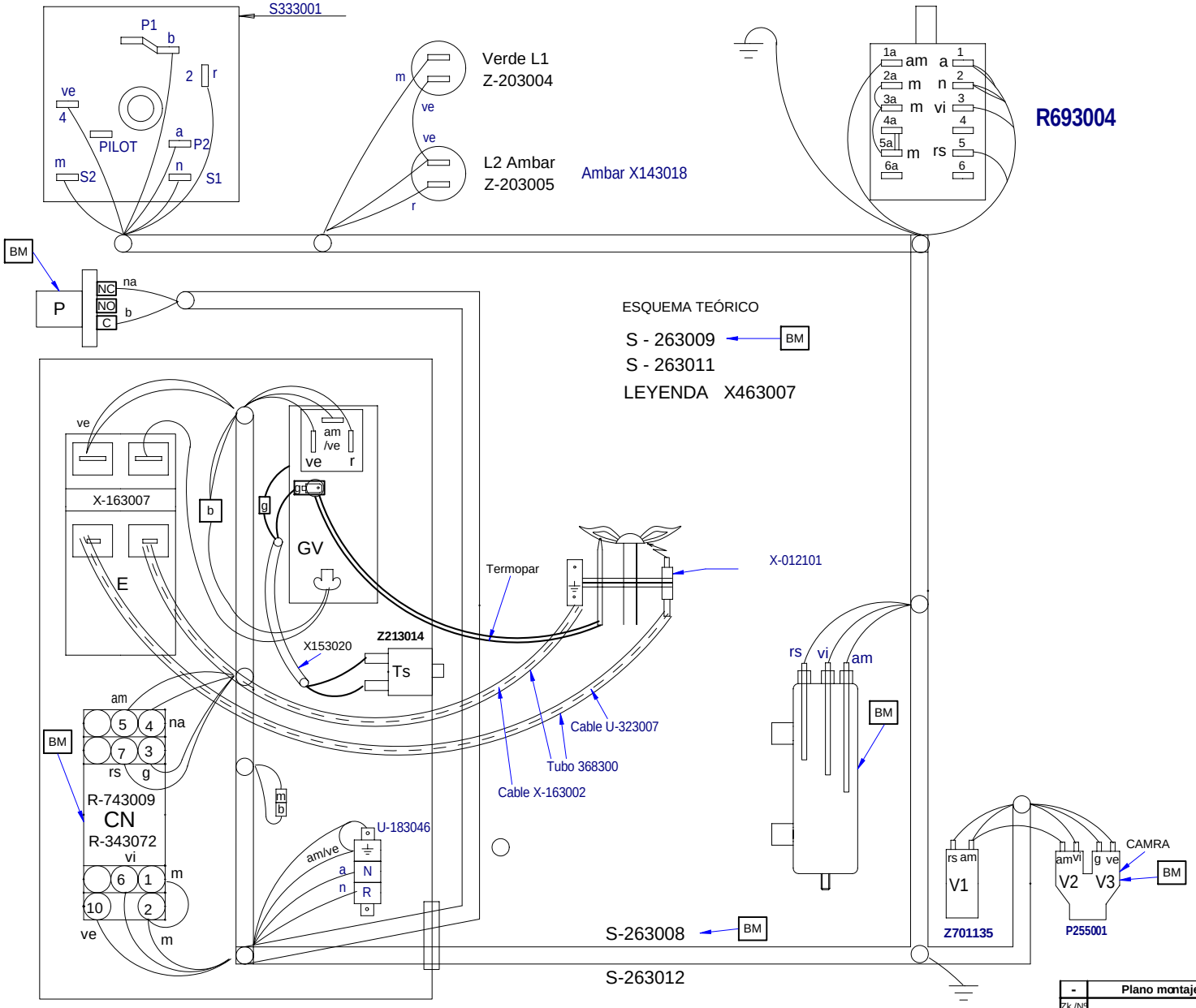

-	Plano montaje MG-910 BM AD	-		S263010000	-
Zk./Nº	Pieza	Cant.	Materiala/Material	Klas. zk/Nº Clas.	Gainazal akabera/Tratamiento
Zk./Nº	Aldaketa/Modificaciones		Nork proposatua/Propuesta de	Data/Fecha	Perdoi orokorrak Tolerancias generales

< 5 ± 0.2 | 50 ÷ 100 ± 0.8
5 ÷ 25 ± 0.4 | >100± 1
25 ÷ 50 ± 0.6 | α ± 1

	Sinadura/Firma	Data/Fecha
Marraztua/Dibujado	M.Maillo	7-07-2010
Proiektatua/Proyectado	M.Maillo	7-07-2010
Egiaztatua/Comprobado	ENERITZ	7-07-2010
Eskala/Escala		

FAGOR
Fagor Industrial,Koop.Elk, Mugatua

Gainazal perdoia
Mecanizado superficial

MARMITA BM

Plano Zk./Plano Nº
HC- 82953

Plano hau ezin daiteke erabili, ez berriztatu, gure baimenik gabe.

- Zk. ord. du
- Zk.gaitik ord.