SIMAG

SMN 125

R 134 A VERSION

SPARE PARTS LIST
CATALOGO RICAMBI
CATALOGUE PIÈCES DÉTACHÉES
ERSATZTEILENKATALOG

090090.07 REV. 11/2009

PAGE PAGINA PAGE SEITE	TABLE OF CONTENTS	INDICE	TABLE DES MATIERES	INHALTVERZEICHNIS
1	TABLE OF CONTENTS	INDICE	TABLE DES MATIERES	INHALTVERZEICHNIS
2/3	UNIT PANELS	ASSIEME MOBILE	ENS. CAROSSERIE	MACHINE GEHAUSE
4/5	REFRIGERANT SYSTEM AIR COOLED	SISTEMA REFRIGERANTE RAFFR. AD ARIA	CIRCUIT FRIGORIFIQUE REFROID. A AIR	GEFRIERSYSTEM LUFTGEKUEHLT
6/7	REFRIGERANT SYSTEM WATER COOLED	SISTEMA REFRIGERANTE RAFFR. AD ACQUA	CIRCUIT FRIGORIFIQUE REFROID. A EAU	GEFRIERSYSTEM WASSERGEKUEHLT
8/9	WATER SYSTEM	CIRCUITO IDRAULICO	CIRCUIT HYDRAULIQUE	WASSER SYSTEM
10/11	CONTROL BOX	SCATOLA DI CONTROLLO	BOITE ELECTRIQUE	SCHALTSCHRANK
12	COMPRESSOR AND ELECTRIC COMPONENT CHARTS	TABELLA COMPRESSORI E COMPONENTI ELETTRICI	LISTE DES COMPRESSEURS ET COMPOSANTS ELECTRIQUE	KOMPRESSOR UND ELEKTRISCHER TEILLISTE

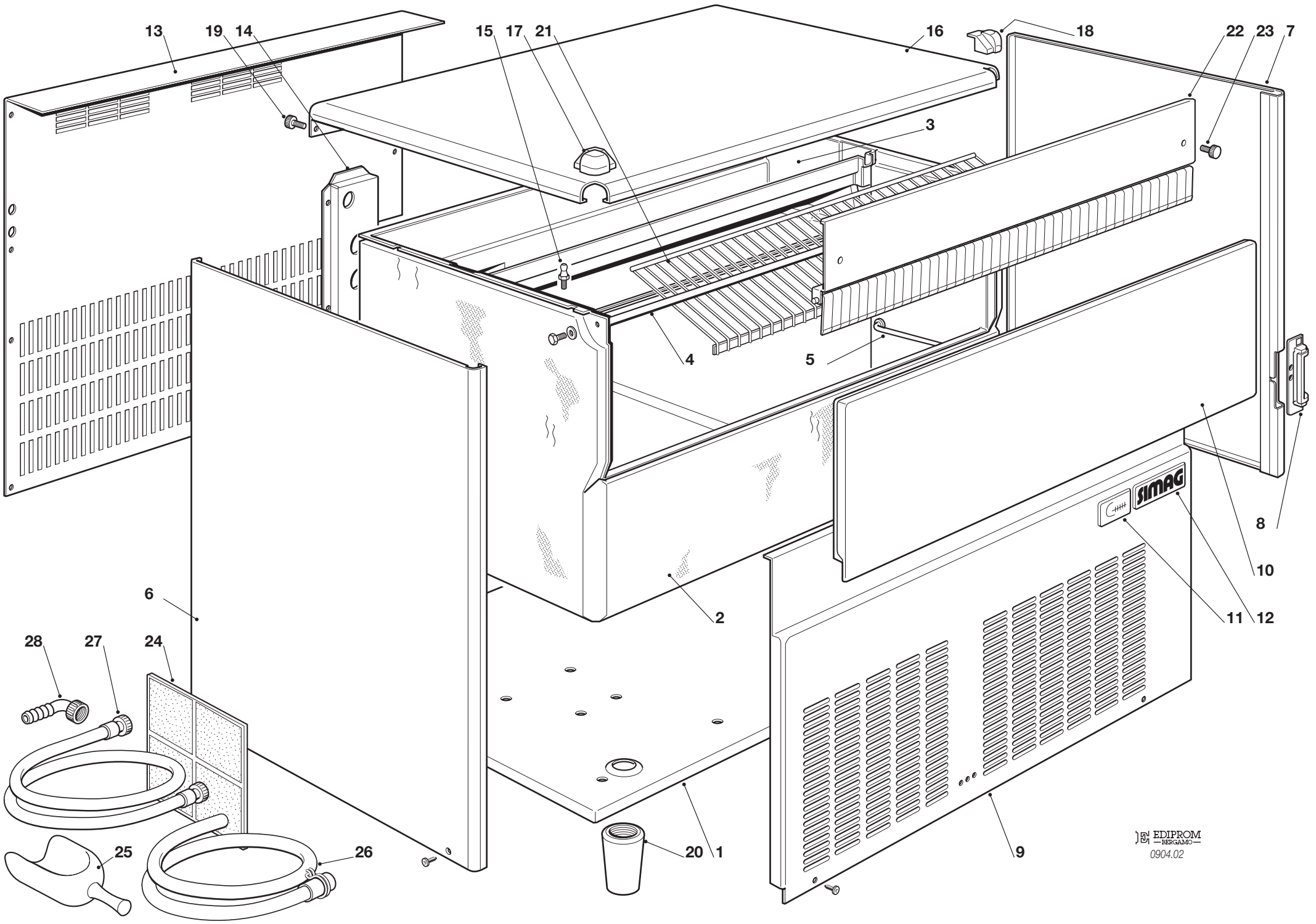
13
19
14
15
17
21
16
18
22
23
7
3
4
5
8
10
6
2
11
12
28
27
24
25
26
20
1
9
SIMAG
EDIPROM
BERGAMO
0904.02

SMN 125 - UNIT PANELS - ASSIEME MOBILE - ENS. CARROSSERIE - MACHINE GEHAUSE

ITEM NO POS. NO REP. NO REF. NO	PART NO CODICE REFERENCE STUECK NR	DESCRIPTION	DESCRIZIONE	DESIGNATION	BESCHREIBUNG
1	781406 18	BASE	PIASTRA DI BASE	PLAQUE DE BASE	GRUNDPLATTE
2	060524 05	INSULATED BIN ASSY	ASSIEME CELLA ISOLATA	ENS. CABINE	ISOLIEREISSPEICHER
3	Z1CE011	EVAPORATOR HOUSING	INVOLUCRO EVAPORATORE	CHAMBRE INTERIEUR	CELLE INTERN
4	732016 11	BIN DOOR BRACKET	ASTA SPORTELLO	TIGE PORTE	KLAPPENACHSE
5	732017 02	BULB HOLDER	TUBO PORTABULBO	TUBE PORTEBULBE	FUEHLERHALTER
6	722382 00	LEFT SIDE PANEL	PANNELLO SINISTRO	JOUE GAUCHE	LINK. GEHÄUS. EDELST.
7	722381 00	RIGHT SIDE PANEL	PANNELLO DESTRO	JOUE DROITE	RECH. GEHÄUS. EDELST.
8	660883 00	FRONT SWITCH PLASTIC PROT	CARTER PROTEZIONE INTERRUT	CARTER PROTECTION INTERRUPT	SCHALTERABDECKUNG
9	722380 00	FRONT PANEL	PANNELLO ANTERIORE	PANNEAU AVANT	VORDERE WAND ED.T.
10	060491 26	BIN DOOR	SPORTELLO	PORTE CABINE	SPEICHERTUER
11	650976 27	SMN 125 LABEL	TARGHETTA SMN 125	EMBLEME SMN 125	SMN 125 ABGEBILDET
12	650976 00	SIMAG LOGO	TARGHETTA SIMAG	EMBLEME SIMAG	SIMAG ABGEBILDET
13	702567 00	REAR PANEL	PANNELLO POSTERIORE	PANNEAU POSTERIEUR	HINTERE ABDECKUNG
14	702334 00	METAL BRACKET FOR FITTING	SUPPORTO ATTACCHI	SUPPORT DE RACCORDS	METALLTRÄGER
15	650790 00	STUD	PERNO	AXE	STIFT
16	722383 00	TOP PANEL	PANNELLO SUPERIORE INOX	ENS. COUVERCLE	DECKEL GESAMTHEIT
17	660884 01	LEFT TOP CAP	TAPPO IN PLASTICA SINISTRO	CAPUCHON EN PLAST. GAUCHE	PLASTIK PROFEN LINK
18	660884 00	RIGHT TOP CAP	TAPPO IN PLASTICA DESTRO	CAPUCHON EN PLAST. DROITE	PLASTIK PROFEN RECHT
19	650806 00	REAR STUD	PERNO POSTERIORE	AXE ARRIÉRE	TRÄGEN - HINTEN
20	660638 02	LEG	PIEDE REGOLABILE	PIED RÉGLABE	GERÄTEFUSS
21	Z1AC011	ICE DEFLECTOR	GRIGLIA SCORRIMENTO CUBETTI	GRILLE GLISSEMENT GLAÇON	ABGLEITGRILL
22	060524 10	CURTAIN ASSY	ASSIEME TENDINA	ENS. LAMELLE	ABDECKKLAPPE GESAMTHEIT
23	Z1AC015	KNURLED SCREW	VITE GODRONATA	VIS MOLETÉE	SCHRAUBE
24	660515 03	AIR FILTER	FILTRO ARIA	FILTRE A AIR	LUFT FILTIER
25	650071 00	ICE SCOOP	SESSOLA	SASSE	EISSCHAUFEL
26	060513 01	KIT WATER DRAIN PIPE	KIT TUBO SCARICO ACQUA	KIT TUYAU VIDANGE EAU	WASSER SLAUFSCHLAUCH
27	060513 00	KIT WATER SUPPLY PIPE	KIT TUBO ALIM. ACQUA	KIT TUYAU D'ALIM. EAU	WASSER ANSCHLUSSCHLAUCH
28	Z1AD011	ELBOW WITH RING NUT	CURVA CON GHIERA	COUDE AVEC BAGUE	KRUMMER

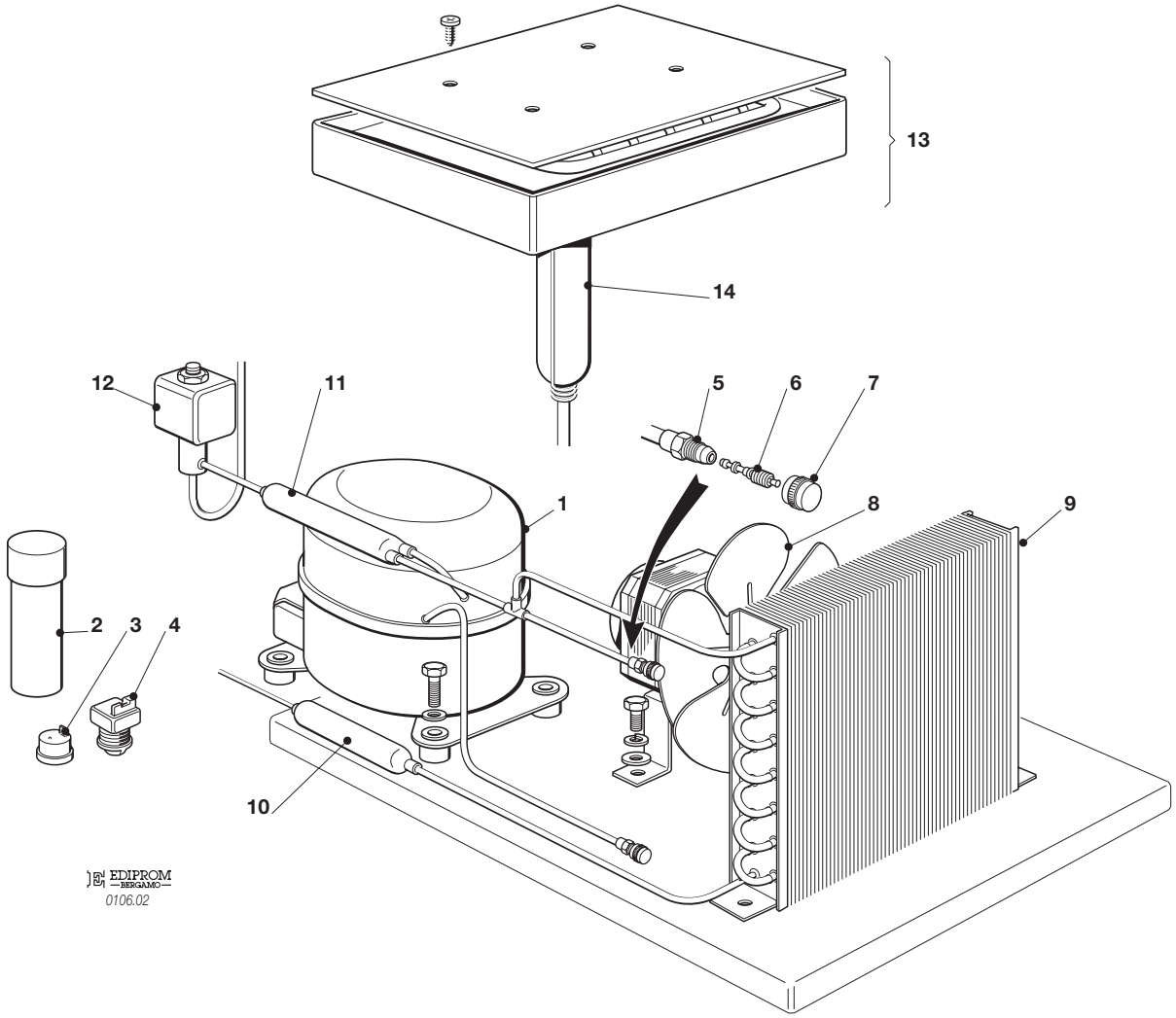
13
14
12
11
5
6
7
1
8
9
2
3
4
10
EDIPROM
BERGAMO
0106.02

SMN 125 - REFRIGERANT SYSTEM AIR COOLED - SISTEMA REFRIGERANTE RAFFR. AD ARIA
CIRCUIT FRIGORIFIQUE REFROID. PAR EAU - WASSERGEKÜHLT GEFRIERSYSTEM

ITEM NO POS. NO REP. NO REF. NO	PART NO CODICE REFERENCE STUECK NR	DESCRIPTION	DESCRIZIONE	DESIGNATION	BESCHREIBUNG
1	670099 05	COMPRESSOR	COMPRESSORE	COMPRESSEUR	KOMPRESSOR
2/a	620167 00	START CAPACITOR	CONDENS. DI SPUNTO	CAPACITE'/DEMARRAGE	START KONDENSATOR
2/b	620167 24	RUN CAPACITOR	CONDENS. DI MARCIA	CAPACITE' PERMANENCE	BETRIEB KONDENSATOR
3	620058 57	PROTECTOR	PROTETTORE	PROTECTEUR	SCHUTZGERAT
4	620057 47	RELAY	RELE'	RELAIS	RELAIS
5	650109 00	VALVE BODY	CORPO VALVOLA	CORPS DE VANNE	VENTILGEHAUSE
6	670012 00	VALVE PISTON	PISTONCINO VALVOLA	PISTON	VENTILKOLBEN
7	650106 00	VALVE CAP	CAPPUCCIO VALVOLA	CAPUCHON DE VANNE	VENTILKLAPPE
8	620419 07 620419 34	FAN MOTOR BLADE	MOTOVENTILATORE VENTOLA	MOTO-VENTILATEUR HELICE	LÜFTERMOTOR FLÜGEL
9	620434 00	AIR COOLED CONDENSER	CONDENSATORE ARIA	CONDENSEUR	KONDENSATOR
10	670006 01	DRIER	FILTRO DEUMIDIFICATORE	FILTRE DESHYDRATEUR	TROCKNER
11	630137 01	MECHANICAL FILTER	FILTRO MECCANICO	FIL TRE MECANIQUE	MECHANISCHFIL TERN
12	620306 48 620306 46	HOT GAS VALVE COIL HOT GAS VALVE BODY	BOBINA VALVOLA GAS CALDO CORPO VALVOLA GAS CALDO	BOBINE VANNE GAZ CHAUDS CORP VANNE GAZ CHAUDS	HEISSGAZ VENTIL SPULE VENTILGEHAUSE
13	784490 00	EVAPORATOR ASSY	ASSIEME EVAPORATORE	ENS. EVAPORATEUR	VERDAMPFER
14	784484 01	ACCUMULATOR ASSY	ASSIEME ACCUMULAT.	ENS. ACCUMULATEUR	SAMMLER/ SAUGLEIT.

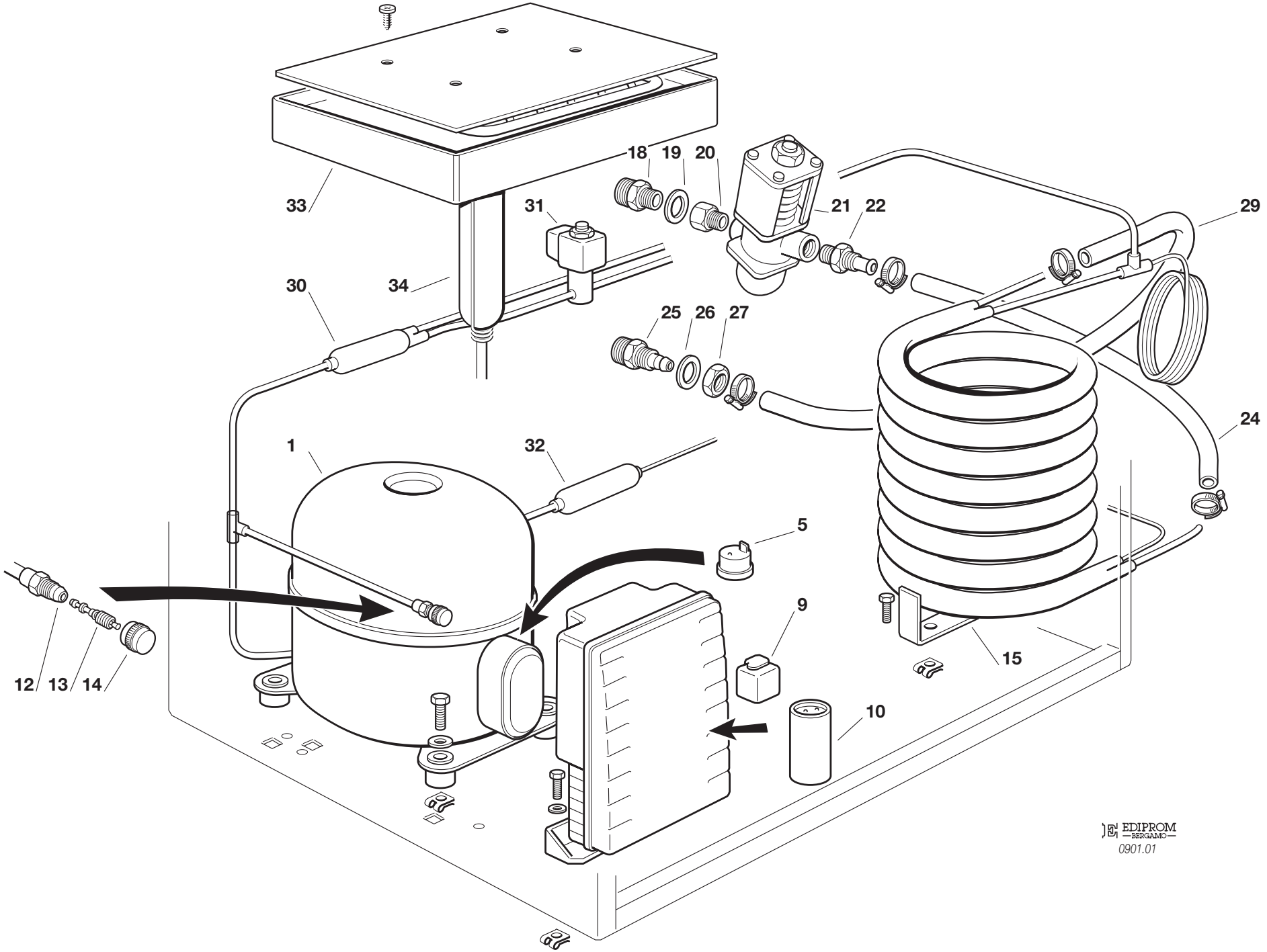
33
31
18
19
20
21
22
29
30
34
25
26
27
24
1
32
5
9
15
10
12
13
14
EDIPROM
BERGAMO
0901.01

SMN 125 - REFRIGERANT SYSTEM WATER COOLED - SISTEMA REFRIGERANTE RAFFR. AD ACQUA
CIRCUIT FRIGORIFIQUE REFROID. PAR EAU - WASSERGEKÜHLT GEFRIERSYSTEM

ITEM NO POS. NO REP. NO REF. NO	PART NO CODICE REFERENCE STUECK NR	DESCRIPTION	DESCRIZIONE	DESIGNATION	BESCHREIBUNG
1	670099 05	COMPRESSOR	COMPRESSORE	COMPRESSEUR	KOMPRESSOR
5	620058 57	PROTECTOR	PROTETTORE	PROTECTEUR	SCHUTZGERAT
9	620057 47	RELAY	RELE'	RELAIS	RELAIS
10/a	620167 00	START CAPACITOR	CONDENS. DI SPUNTO	CAPACITE'/DEMARRAGE	START KONDENSATOR
10/b	620167 24	RUN CAPACITOR	CONDENS. DI MARCIA	CAPACITE' PERMANENCE	BETRIEB KONDENSATOR
12	650109 00	VALVE BODY	CORPO VALVOLA	CORPS DE VANNE	VENTILGEHAUSE
13	670012 00	VALVE PISTON	PISTONCINO VALVOLA	PISTON	VENTILKOLBEN
14	650106 00	VALVE CAP	CAPPUCCIO VALVOLA	CAPUCHON DE VANNE	VENTILKLAPPE
15	620495 02	WATER CONDENSER	CONDENSATORE ACQUA	CONDENSEUR	WASSER KONDENSATOR
18	400053 00	NUT	DADO	ECROU	MUTTER
19	400052 00	WASHER	RONDELLA	RONDELLE	SCHEIBE
20	733204 00	WATER INLET FITTING	RACCORDO INGRESSO ACQUA	RACCORD ARRIVE'E D'EAU	WASSER EINLAUFSTÜCK
21	620111 00	WATER REGUL. VALVE	VALVOLA PRESSOSTATICA	VANNE A EAU PRESSOSTATIQUE	WASSERREGLERVENTIL
22	783208 02	COUPLING	RACCORDO FLANGIATO	RACCORD SORTIE EAU	WASSERREGLEREABFLUSSTUECK
24	281900 01	TUBE	TUBO IN PVC PER METRO	TUYAU EN PLAST. POUR METRE	PLASTIK ROHR-PRO METER
25	660291 00	TEE TUBE		RACCORD EVACUATION 3/4 GAS	3/4 GAS SCHLAUCH
26	400031 00	FIBER WASHER	RONDELLA IN FIBRA	RONDELLE EN FIBRE	FIBER SCHEIBE
27	400030 01	NUT	DADO	ECROU	MUTTER
29	281900 01	TUBE	TUBO IN PVC PER METRO	TUYAU EN PLAST. POUR METRE	PLASTIK ROHR-PRO METER
30	630137 01	MECHANICAL FILTER	FILTRO MECCANICO	FIL TRE MECANIQUE	MECHANISCHFIL TERN
31	620306 48 620306 46	HOT GAS VALVE COIL HOT GAS VALVE BODY	BOBINA VALVOLA GAS CALDO CORPO VALVOLA GAS CALDO	BOBINE VANNE GAZ CHAUDS CORP VANNE GAZ CHAUDS	HEISSGAZ VENTIL SPULE VENTILGEHAUSE
32	670006 01	DRIER	FILTRO DEUMIDIFICATORE	FILTRE DESHYDRATEUR	TROCKNER
33	784490 00	EVAPORATOR ASSY	ASSIEME EVAPORATORE	ENS. EVAPORATEUR	VERDAMPFER
34	784484 01	ACCUMULATOR ASSY	ASSIEME ACCUMULAT.	ENS. ACCUMULATEUR	SAMMLER/ SAUGLEIT.

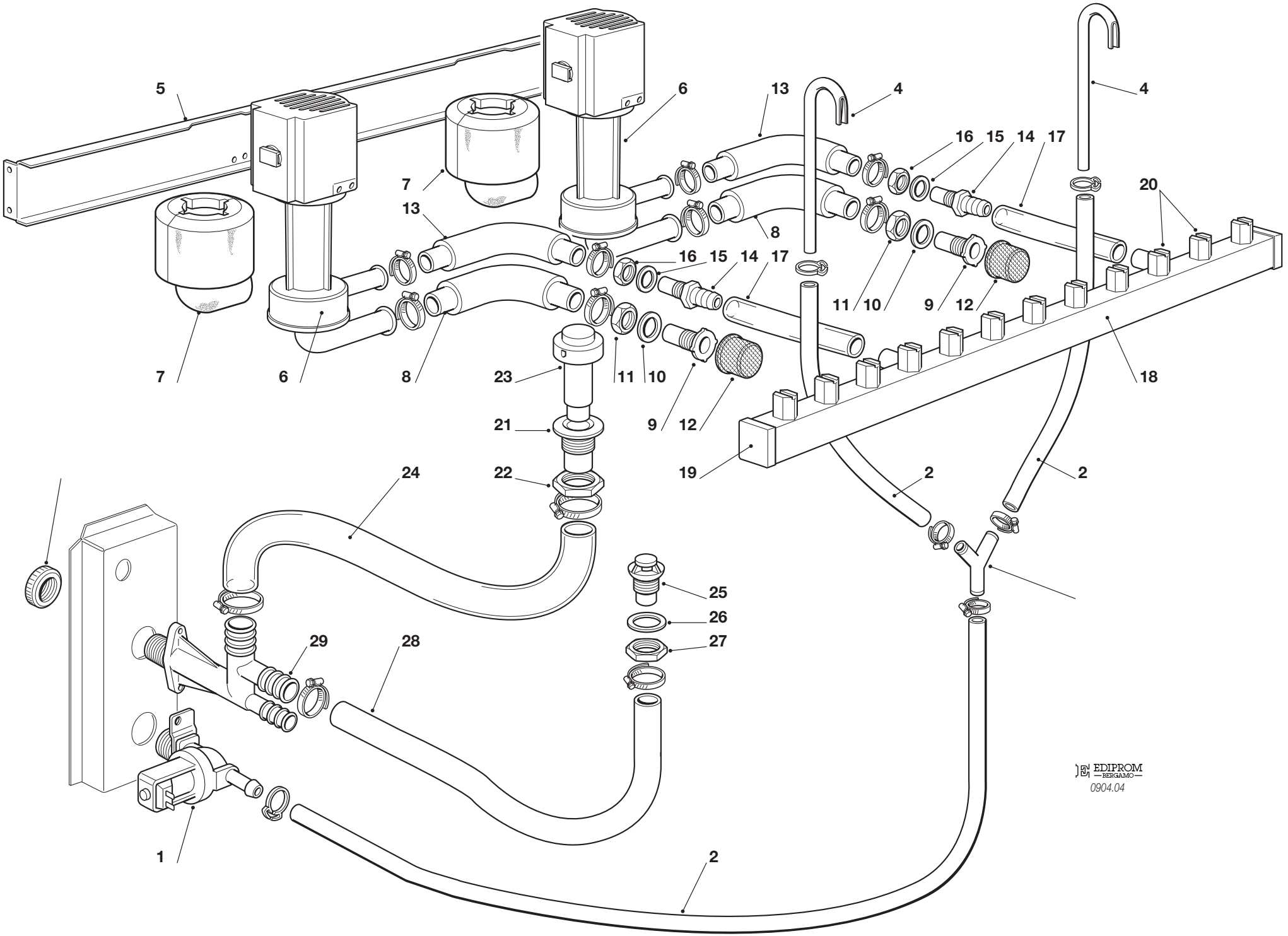
5
6
13
4
4
16
15
14
17
20
7
13
8
16
15
14
17
11
10
9
12
7
6
8
23
11
10
9
12
18
21
19
2
2
24
22
25
26
27
29
28
1
2
EDIPROM
BERGAMO
0904.04

SMN 125 - WATER SYSTEM - CIRCUITO IDRAULICO - CIRCUIT HYDRAULIQUE - WASSERSYSTEM

ITEM NO POS. NO REP. NO REF. NO	PART NO CODICE REFERENCE STUECK NR	DESCRIPTION	DESCRIZIONE	DESIGNATION	BESCHREIBUNG
1	650105 52	WATER INLET VALVE	ELETTROVALVOLA	ELECTROVANNE	ELEKTROMAGNETVENTIL
2	281900 01	PLASTIC TUBE - PER METER	TUBO INGRESSO ACQUA	TUYAU EN PLASTIQUE - POUR MT.	PLASTIK ROHR - PRO METER
4	734683 00R	WATER INLET COPPER PIPE	TUBO RAME INGR. ACQUA	TUYAU ENTREE EAU CUIVRE	WASSEREINLAUFROHR - CUPPER
5	703228 00	METAL BRACKET	SUPPORTO POMPA	SUPPORT METALLIQUE	METAL TRAEGER
6	620415 00	WATER PUMP	POMPA	POMPE A EAU	WASSER PUMPE
7	Z1ID043	PUMP COVER INSULATION	ISOLAMENTO POMPA	COUPELLE POUR POMPE	PUMPENISOLATION
8	610189 01	PUMP FEEDING PIPE	TUBO ASPIRAZIONE POMPA	TUYAU D'ASPIRATION POMPE	PUMPENANSAUGSCHLAUCH
9	Z1AC029	PUMP FEEDING PIPE-FIXING	RACCORDO ASPIRAZ. POMPA	RACCORD ASPIRATION POMPE	ANSAUGANSCHLUSSTUCK
10	Z1AC014	WASHER	RONDELLA	RONDELLE	UNTERLEGSCHEIBE
11	Z1AC017	NUT	DADO	ECROU	MUTTER TUERCA
12	Z1AC012	PUMP FEEDING FILTER	FILTRO ASPIRAZIONE POMPA	FILTRE ASPIRATION POMPE	PUMPENANSAUGFILTER
13	Z1ID006	PUMP INLET WATER PIPE	TUBO MANDATA POMPA	TUYAU DE REFOULEMENT	PUMPENABFLUSSCHLAUCH
14	Z1AC030	PUMP INLET WATER PIPE-FIXING	RACCORDO MANDATA POMPA	RACCORD REFOULEMENT POMPE	PUMPENABFLUSSANSCHLUSSTUCK
15	Z1AC013	WASHER	RONDELLA	RONDELLE	UNTERLEGSCHEIBE
16	Z1AC016	NUT	DADO	ECROU	MUTTER TUERCA
17	281830 04	SPRAY BAR FEEDING PIPE	TUBO ALIMENTAZIONE COLLETT.	TUYAU D'ALIMENTATION EAU	ANSCHLUSSCHLAUCH KOLLEKTOR
18	650665 10	SPRAY BAR	TUBO SPRUZZATORE	COLLECTEUR	KOLLEKTOR
19	660557 00	PLUG	UGELLO SPRUZZATORE	BOUCHON POUR COLLECTEUR	STOPFEN
20	660558 00	SPRAY JET	SPRUZZATORI	GICLEURS	SPRÜHDÜSEN
21	Z1AC057	OVERFLOW EXHAUST	RACCOR. SCARICO TROPPO PIENO	RACCORD E'COULEM. TROP-PLEIN	ÜBERLAUFROHR
22	Z1AC058	NUT	DADO	ECROU	MUTTER TUERCA
23	660601 00	OVERFLOW STAND PIPE	TUBO DI TROPPO PIENO	TROP PLEIN	UEBERLAUFROHR
24	Z1ID028	OVERFLOW DRAIN TUBE	TUBO SCARICO TROPPO PIENO	TUYAU VIDANGE TROP PLAIN	BEHÄLTER ABLAUF
25	Z1AC028	DRAIN FILTER	DRAIN FILTER	FILTRE CABINE STOCKAGE	BEHÄLTER ABLAUF FILTER
26	Z1AC013	WASHER	RONDELLA	RONDELLE	UNTERLEGSCHEIBE
27	Z1AC016	NUT	DADO	ECROU	MUTTER TUERCA
28	610189 00	STORAGE BIN DRAIN TUBE	TUBO SCARICO CONTENITORE	TUYAU VIDANGE CONTENEUR	BEHÄLTERAUSLAUFSCHLAUCH
29	Z1ID025	WATER DRAIN FITTING	RACCORDO SCARICO ACQUA	RACCORD EVACUATION EAU	WASSERABFLUSSANSCHLUSSE

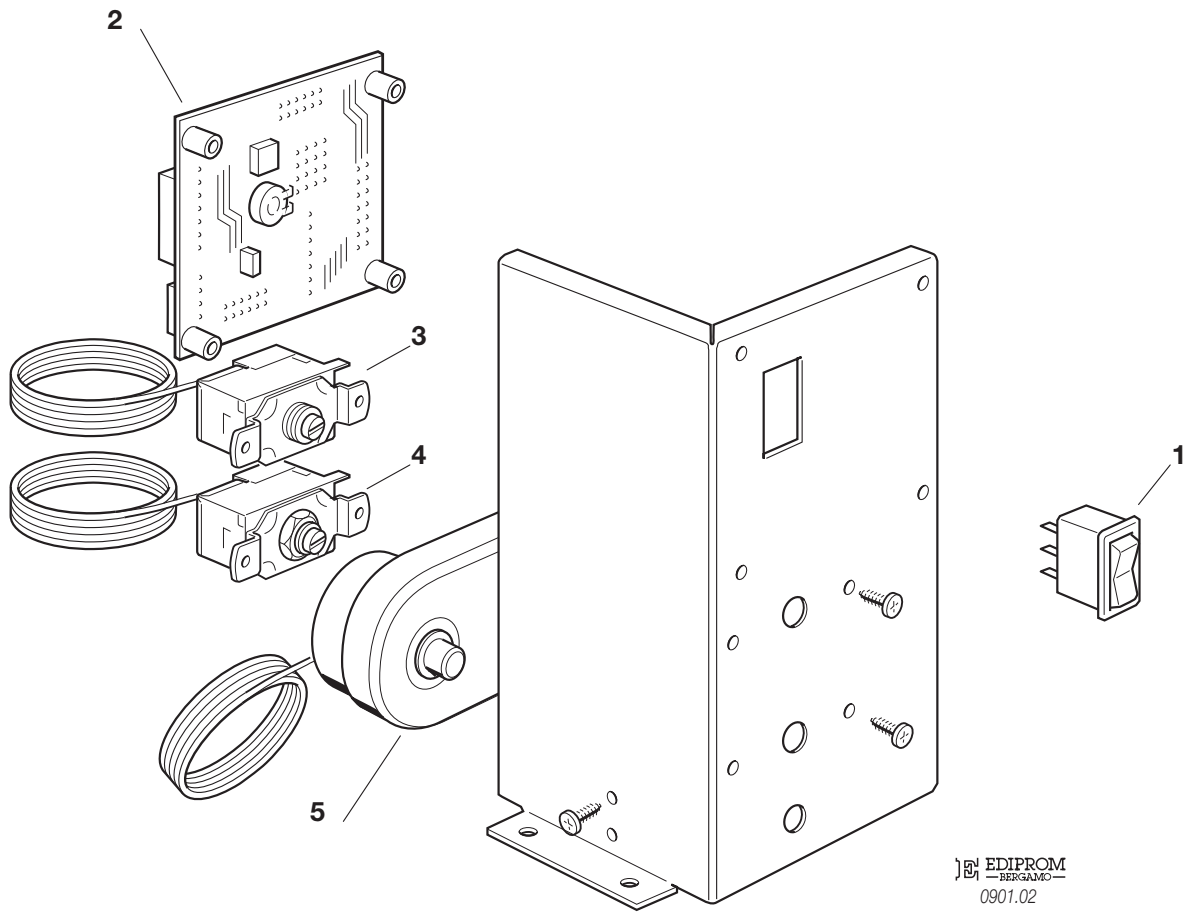

EDIPROM
BERGAMO
0901.02

SMN 125 - CONTROL BOX - SCATOLA DI CONTROLLO - BOITE ELECTRIQUE - SCHALTSCHRANK

ITEM NO POS NO REP. NO REF. NO	PART NO CODICE REFERENCE STUECK NR	DESCRIPTION	DESCRIZIONE	DESIGNATION	BESCHREIBUNG
1	620453 00	SWITCH	INTERRUTTORE LUMINOSO	INTERRUPTEUR LUMINEUX	SCHALTER
2	620507 01	TIMER	TIMER	MINUTERIE	TIMER
3	620201 01	EVAPORATOR THERMOSTAT	TERMOSTATO EVAPORATORE	THERMOSTAT EVAPORATEUR	VERDAMPFERTHERMOSTAT
4	630005 00	BIN THERMOSTAT	TERMOSTATO CONTENITORE	THERMOSTAT CONTENEUR	BEHÄLTER THERMOSTAT
5	620508 00	PRESSURE SAFETY	PRESSOSTATO DI SICUREZZA	PRESSOSTAT DE SECURITÉ	SICHERHEITS DRUCKWACTER

SMN 125 - COMPRESSOR CHART - TABELLA COMPRESSORI - TABLEAU COMPRESSEUR - KOMPRESSOR KARTE

MODEL MODELLO MODELE MODELL	VOLTS TENSIONE TENSION SPANNUNG	COMPRESSOR MODEL MOD. COMPRESSORE TYPE COMPRESSEUR KOMPRESSOR TYP	COMPRESSOR COMPRESSORE COMPRESSEUR KOMPRESSOR	RELAY RELE' RELAIS RELAIS	PROTECTOR PROTETTORE PROTECTEUR SCHUTZGERAT	START CAPACITOR CONDENS. DI SPUNTO CAPACITE'/DEMARRAGE START KONDENSATOR	RUN CAPACITOR CONDENS. DI MARCIA CAPACITE' PERMANENCE BETRIEB KONDENSATOR
SMN 125	115/60/1						
SMN 125	230/60/1						
SMN 125	230/50/1	CAJ4519Z	670099 05	620057 47	620058 57	620167 00	620167 24

SMN 125 - ELECTRIC COMPONENTS CHART - TABELLA COMPONENTI ELETTRICI
TABLEAU COMPOSANTS ELECTRIQUE - ELEKTRISCHEKARTE

MODEL MODELLO MODELE MODELL	VOLTS TENSIONE TENSION SPANNUNG	WATER PUMP POMPA POMPE A EAU WASSER PUMPE	FAN MOTOR ONLY MOTORE VENTILATORE MOTEUR VENTILATEUR LUFTER MOTOR	WATER INLET VALVE VALV. INGR. ACQUA V.E.M. ARRIVEE' EAU WASSEREIN. VENTIL	HOT GAS VALVE VALVOLA GAS CALDO V.E.M. GAZ CHAUDS HEISSGAZ VENTIL	TIMER TIMER MINUTERIE TIMER	CONTACTOR CONTATTORE CONTACTEUR SCHALTSCHUTZ
SMN 125	115/60/1						
SMN 125	230/60/1						
SMN 125	230/50/1	620415 00	620419 07	650105 52 (AIR / WATER)	620306 48 -COIL- 620306 46 - BODY-	620507 01	

SIMAG
ICE MACHINES

www.simag.it

SIMAG
via Risorgimento, 4
20017 Mazzo di Rho (MI) - Italy
Tel. +39 02 93900215 (Commerciale - Sales Dept.)
Tel. +39 02 93960357 (Assistenza - Service Dept.)
Fax +39 02 93900226 (Commerciale - Sales Dept.)
Fax +39 02 93960366 (Assistenza - Service Dept.)
e-mail: sales@simag.it
e-mail: service@simag.it

Singapore Office
SIMAG FAR EAST
627A Aljunied Road
04-04 Biztech Centre
Singapore 389842
Tel. ++65 6738 5393
Fax ++65 6738 1959
e-mail: scotsice@singnet.com.sg

Certified ISO 9001
TOTAL QUALITY