DESPIECE TECNICO

# Hornos Convecion a Gas
# Fours Air ulsé à Gaz
# Gas Convection Ovens
# Gas-Konvektionsöfen
# Forni a Convezione a Gas

## Modelos:

**HCG-20/21**
**HCG-2-20/11**

**VCG-20/21**
**VCG-2-20/11**

***Mayo 2003 May***

FAGOR

Fagor Industrial

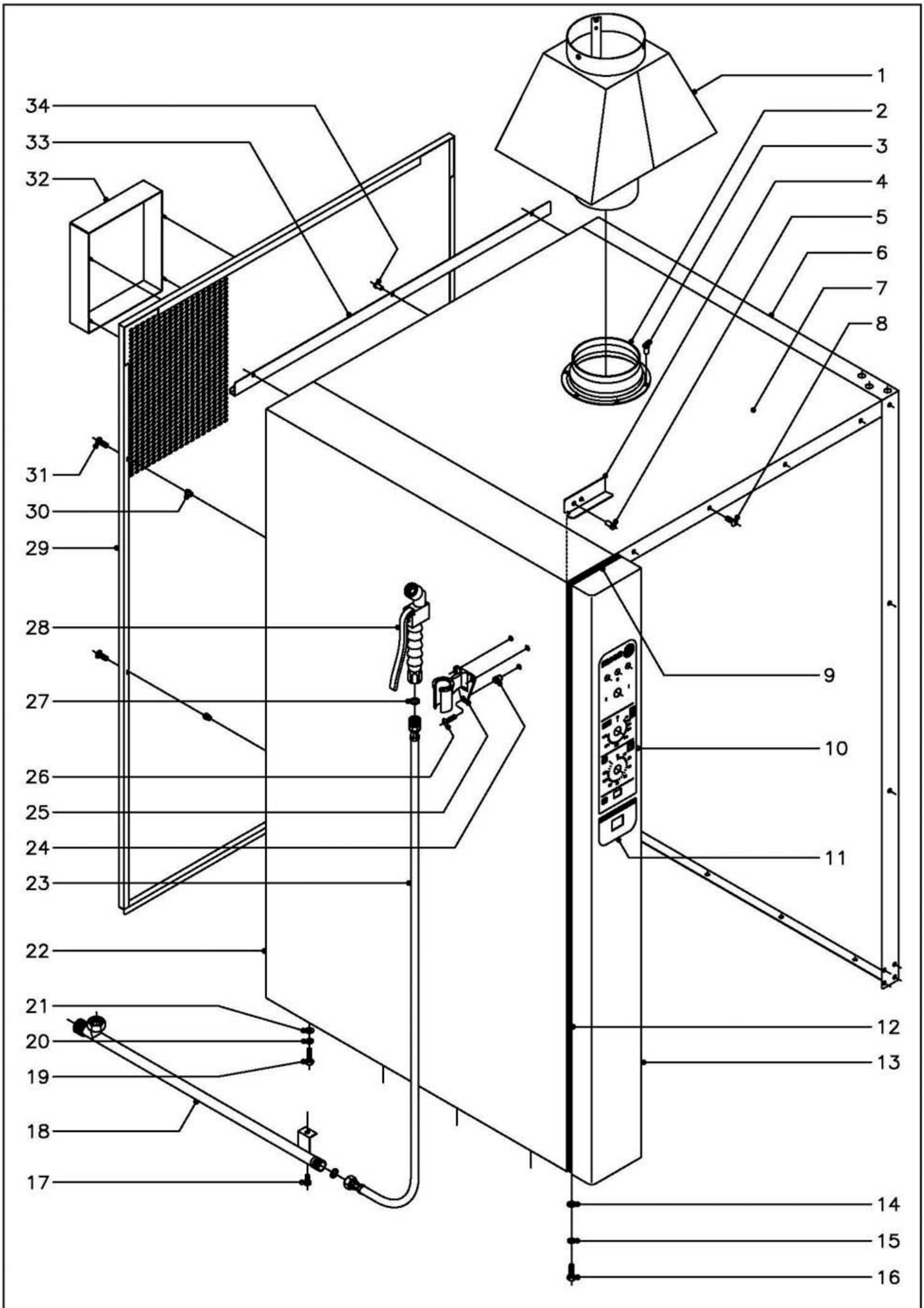


| N plano | Firma | Fecha | Aparato | Lamina | |
|---|---|---|---|---|---|
| C–1357 | | 5–2003 | MUEBLE<br>HORNOS A GAS HCG–20/21 | 1 | Fagor Industrial S.Coop. FAGOR<br>Oñate |

| MOD. | HORNO HCG | ZONA | MUEBLE | PLANO | C-1357 |
|---|---|---|---|---|---|

| ITEM | CODIGO | DENOMINACION | TEXTO | HCG-20/21 | | | | | | | | NOTAS |
|---|---|---|---|---|---|---|---|---|---|---|---|---|
| 1 | T122820 | Chimenea | | 1 | | | | | | | | |
| | R292646 | Conducto humos | | 1 | | | | | | | | |
| | R272614 | Soporte chimenea | | 3 | | | | | | | | |
| | Q412002 | Remache tubular Ø 4x7,5 | | 9 | | | | | | | | |
| 2 | R292645 | Guia chimenea | | 1 | | | | | | | | |
| 3 | Q412000 | Remache tubular Ø 4x8 | | 6 | | | | | | | | |
| 4 | R662811 | Fijacion portamandos | | 1 | | | | | | | | |
| 5 | Q412002 | Remache tubular Ø 4x7,5 | | 2 | | | | | | | | |
| 6 | T152805 | Panel lateral derecho | | 1 | | | | | | | | |
| 7 | T152806 | Panel superior | | 1 | | | | | | | | |
| | Q221343 | Remache exagonal M-6 | | 4 | | | | | | | | Amarre panel superior a laterales |
| | Q232040 | Arandela plana A-6 | | 4 | | | | | | | | Amarre panel superior a laterales |
| | Q262040 | Arandela muelle A-6 | | 4 | | | | | | | | Amarre panel superior a laterales |
| | Q012042 | Tornillo exagonal M-6x15 | | 4 | | | | | | | | Amarre panel superior a laterales |
| 8 | Q152017 | Tornillo amarre M-6x13 | | 7 | | | | | | | | |
| 9 | 3715400 | Junta panel portamandos L=130 | | 1 | | | | | | | | |
| 10 | T013006 | Serigrafia superior | | 1 | | | | | | | | |
| 11 | R723008 | Serigrafia inferior | | 1 | | | | | | | | |
| 12 | 3715400 | Junta panel portamandos L=1400 | | 2 | | | | | | | | |
| 13 | T102813 | Panel portamandos | | 1 | | | | | | | | |
| 14 | Q232040 | Arandela plana A-6 | | 2 | | | | | | | | |
| 15 | Q262040 | Arandela muelle A-6 | | 2 | | | | | | | | |
| 16 | Q012042 | Tornillo exagonal M-6x15 | | 2 | | | | | | | | |
| 17 | Q012042 | Tornillo exagonal M-6x15 | | 1 | | | | | | | | Opcional bajo pedido |
| 18 | R685003 | Suplemento ducha | | 1 | | | | | | | | Opcional bajo pedido |
| 19 | Q012042 | Tornillo exagonal M-6x15 | | 8 | | | | | | | | |
| 20 | Q262040 | Arandela muelle A-6 | | 8 | | | | | | | | |
| 21 | Q232040 | Arandela plana A-6 | | 8 | | | | | | | | |
| 22 | T152807 | Panel lateral izquierdo | | 1 | | | | | | | | |

| MOD. | HORNO HCG | ZONA | MUEBLE | PLANO | C-1357 |
|---|---|---|---|---|---|

| ITEM | CODIGO | DENOMINACION | TEXTO | HCG-20/21 | | | | | | | | NOTAS |
|---|---|---|---|---|---|---|---|---|---|---|---|---|
| 23 | R095006 | Flexible de ducha | | 1 | | | | | | | | Opcional bajo pedido |
| 24 | Q221341 | Remache exagonal M-4 | | 3 | | | | | | | | Opcional bajo pedido |
| 25 | R095007 | Soporte de ducha | | 1 | | | | | | | | Opcional bajo pedido |
| 26 | Q042022 | Tornillo avellanado M-4x15 | | 3 | | | | | | | | Opcional bajo pedido |
| 27 | - | Arandela junta ( con cuerpo ducha ) | | 2 | | | | | | | | Opcional bajo pedido |
| 28 | R095005 | Cuerpo de ducha | | 1 | | | | | | | | Opcional bajo pedido |
| 29 | T152812 | Panel posterior exterior | | 1 | | | | | | | | |
| 30 | Q221342 | Remache exagonal M-5 | | 4 | | | | | | | | |
| 31 | Q152038 | Tornillo amarre M-5x30 | | 4 | | | | | | | | |
| 32 | T082808 | Tapa de separacion | | 1 | | | | | | | | |
| 33 | T152810 | Canaleta recogeaguas | | 1 | | | | | | | | |
| 34 | Q412002 | Remache tubular Ø 4x7,5 | | 3 | | | | | | | | |
| | | | | | | | | | | | | |
| | | | | | | | | | | | | |
| | | | | | | | | | | | | |
| | | | | | | | | | | | | |
| | | | | | | | | | | | | |
| | | | | | | | | | | | | |
| | | | | | | | | | | | | |
| | | | | | | | | | | | | |
| | | | | | | | | | | | | |
| | | | | | | | | | | | | |
| | | | | | | | | | | | | |
| | | | | | | | | | | | | |
| | | | | | | | | | | | | |
| | | | | | | | | | | | | |
| | | | | | | | | | | | | |
| | | | | | | | | | | | | |
| | | | | | | | | | | | | |

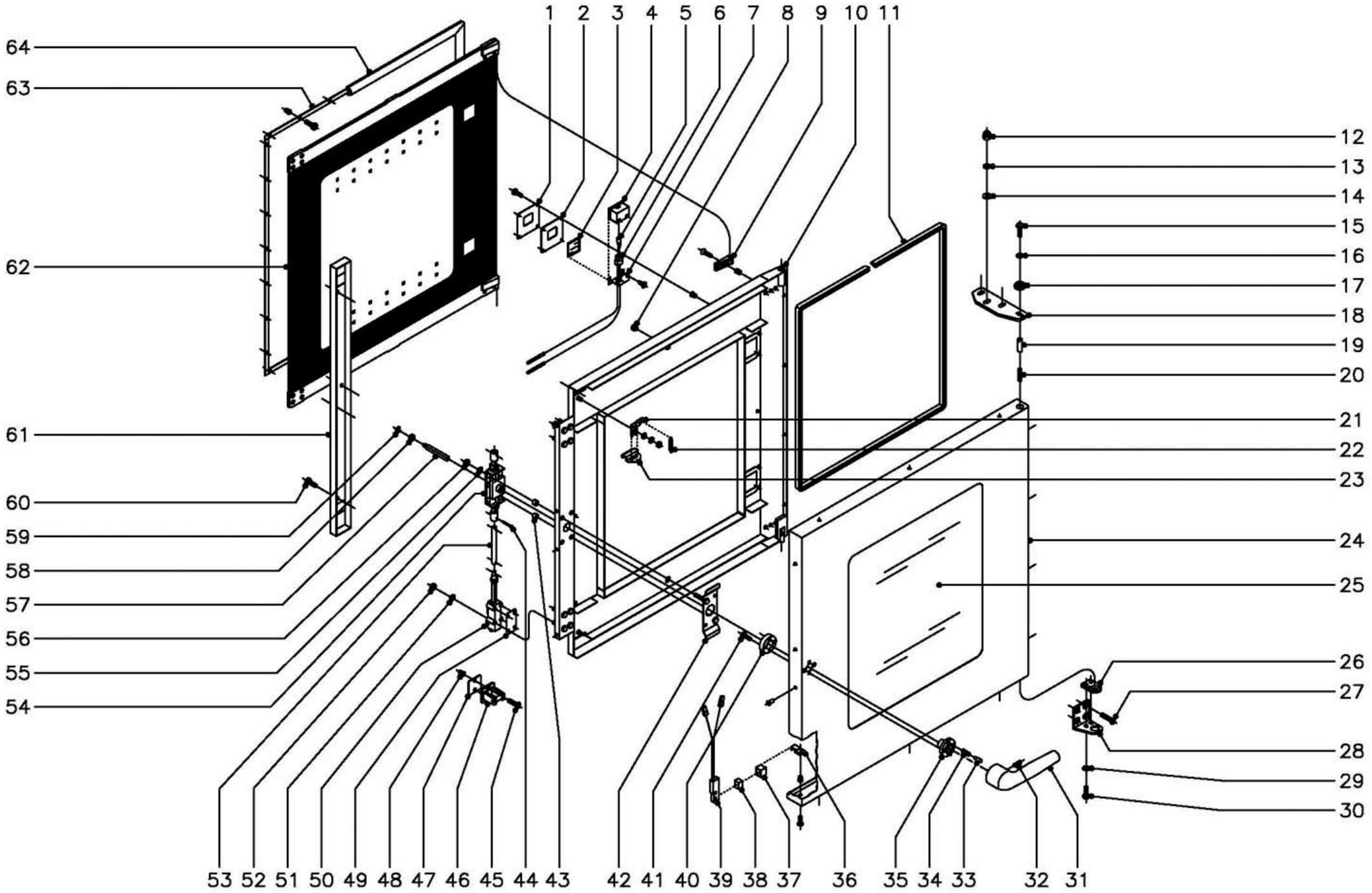


| N plano | Firma | Fecha | Aparato | Lamina | |
|---|---|---|---|---|---|
| C–1358 | | 5–2003 | PUERTA<br>HORNOS A GAS HCG–20/21 | 2 | Fagor Industrial S.Coop. FAGOR<br>Onate |

| MOD. | HORNO HCG | ZONA | PUERTA | PLANO | C-1358 |
|---|---|---|---|---|---|

| ITEM | CODIGO | DENOMINACION | TEXTO | HCG-20/21 | | | | | | | | | NOTAS |
|---|---|---|---|---|---|---|---|---|---|---|---|---|---|
| 1100002598 | | KIT Puerta completa 20/21 | | 1 | | | | | | | | | |
| | | | | | | | | | | | | | |
| 1 | R670608 | Tapa cierre lampara | | 2 | | | | | | | | | |
| | Q032021 | Tornillo alomado M-4x10 | | 8 | | | | | | | | | |
| | Q222041 | Remache exagonal M-4 | | 8 | | | | | | | | | |
| 2 | R670609 | Junta cierre lampara | | 2 | | | | | | | | | |
| 3 | R670618 | Cristal de lampara | | 2 | | | | | | | | | |
| 4 | R670610 | Deflector de lampara | | 2 | | | | | | | | | |
| 5 | R663013 | Lampara 10 W. 12 V. | | 2 | | | | | | | | | |
| 6 | R663058 | Portalamparas | | 2 | | | | | | | | | |
| 7 | R670611 | Suplemento deflector | | 2 | | | | | | | | | |
| | Q042031 | Tornillo avellanado M-5x10 | | 4 | | | | | | | | | |
| 8 | R670617 | Tope cristal interior | | 8 | | | | | | | | | |
| 9 | R670615 | Base de bisagra | | 2 | | | | | | | | | |
| | Q042032 | Tornillo avellanado M-5x15 | | 2 | | | | | | | | | |
| | Q222011 | Remache exagonal M-5 | | 2 | | | | | | | | | |
| 10 | R140500 | Contrapuerta completa 20/21 | | 1 | | | | | | | | | |
| 11 | 3715200 | Junta cristal L=3400 | | 1 | | | | | | | | | |
| 12 | Q212051 | Tuerca sombrerete M-8 | | 3 | | | | | | | | | |
| 13 | Q242050 | Arandela abanico A-8 | | 3 | | | | | | | | | |
| 14 | Q302025 | Arandela plana Ø8,4xØ20x1,5 | | 3 | | | | | | | | | |
| 15 | Q012042 | Tornillo exagonal M-6x15 | | 1 | | | | | | | | | |
| 16 | Q242040 | Arandela abanico A-6 | | 1 | | | | | | | | | |
| 17 | R662807 | Arandela amarre puerta | | 1 | | | | | | | | | |
| 18 | T130500 | Bisagra superior | | 1 | | | | | | | | | |
| 19 | R660534 | Eje superior | | 1 | | | | | | | | | |
| 20 | Z850519 | Resorte | | 1 | | | | | | | | | |
| 21 | R670612 | Base de pestillo | | 2 | | | | | | | | | |
| | Q302022 | Arandela plana Ø16xØ6x1,2 | | 2 | | | | | | | | | |

| MOD. | HORNO HCG | ZONA | PUERTA | PLANO | C-1358 |
|---|---|---|---|---|---|

| ITEM | CODIGO | DENOMINACION | TEXTO | HCG-20/21 | | | | | | | | | NOTAS |
|---|---|---|---|---|---|---|---|---|---|---|---|---|---|
| | Q242040 | Arandela abanico A-6 | | 2 | | | | | | | | | |
| | Q162040 | Tuerca exagonal M-6 | | 2 | | | | | | | | | |
| 22 | R660605 | Muelle tensor pestillo | | 2 | | | | | | | | | |
| 23 | R670613 | Pestillo sujecion cristal interior | | 2 | | | | | | | | | |
| 24 | R140600 | Panel puerta 20/21 | | 1 | | | | | | | | | |
| | Q412002 | Remache tubular Ø4x7,5 | | 16 | | | | | | | | | |
| 25 | R140604 | Cristal exterior 20/21 | | 1 | | | | | | | | | |
| 26 | R660549 | Guia eje inferior | | 1 | | | | | | | | | |
| 27 | Q062040 | Tornillo avellanado M-6x16 | | 4 | | | | | | | | | |
| 28 | R660551 | Bisagra inferior | | 1 | | | | | | | | | |
| 29 | Q242040 | Arandela abanico A-6 | | 2 | | | | | | | | | |
| 30 | Q012041 | Tornillo exagonal M-6x10 | | 2 | | | | | | | | | |
| 31 | T130502 | Manilla | | 1 | | | | | | | | | |
| 32 | Q132042 | Varilla roscada M-6x15 | | 1 | | | | | | | | | |
| 33 | T130507 | Piton enganche | | 2 | | | | | | | | | |
| 34 | T130506 | Resorte | | 2 | | | | | | | | | |
| 35 | T130515 | Guia manilla | | 1 | | | | | | | | | |
| 36 | T130513 | Soporte iman | | 1 | | | | | | | | | |
| 37 | Z200507 | Protector iman | | 1 | | | | | | | | | |
| 38 | Z200506 | Iman | | 1 | | | | | | | | | |
| 39 | Z100522 | Interruptor magnetico | | 1 | | | | | | | | | |
| 40 | T130514 | Soporte resortes | | 1 | | | | | | | | | |
| 41 | Q032032 | Tornillo alomado M-5x15 | | 2 | | | | | | | | | |
| 42 | T130511 | Suplemento fijacion cerradura | | 1 | | | | | | | | | |
| 43 | Z608410 | Casquillo | | 2 | | | | | | | | | |
| 44 | Q352001 | Pasador de aletas Ø2x15 | | 4 | | | | | | | | | |
| 45 | Q042043 | Tornillo avellanado M-6x20 | | 4 | | | | | | | | | |
| 46 | R260545 | Enganche | | 2 | | | | | | | | | |
| 47 | R660538 | Calzo de enganche | | 6 | | | | | | | | | |

| MOD. | HORNO HCG | ZONA | PUERTA | PLANO | C-1358 |
|---|---|---|---|---|---|

| ITEM | CODIGO | DENOMINACION | TEXTO | HCG-20/21 | | | | | | | | | NOTAS |
|---|---|---|---|---|---|---|---|---|---|---|---|---|---|
| 48 | Q221343 | Remache exagonal M-6 | | 4 | | | | | | | | | |
| 49 | T080503 | Suplemento elemento cierre | | 6 | | | | | | | | | |
| 50 | T080504 | Elemento de cierre | | 2 | | | | | | | | | |
| 51 | Q262040 | Arandela muelle A-6 | | 8 | | | | | | | | | |
| 52 | Q162040 | Tuerca exagonal M-6 | | 8 | | | | | | | | | |
| 53 | R090514 | Tubo alargadera | | 2 | | | | | | | | | |
| 54 | T130509 | Mecanismo de cierre | | 1 | | | | | | | | | |
| 55 | Q262040 | Arandela muelle A-6 | | 2 | | | | | | | | | |
| 56 | Q162040 | Tuerca exagonal M-6 | | 2 | | | | | | | | | |
| 57 | T130508 | Eje de manilla | | 1 | | | | | | | | | |
| 58 | T130505 | Casquillo | | 1 | | | | | | | | | |
| 59 | Q271033 | Arandela de seguridad Ø6 | | 1 | | | | | | | | | |
| 60 | Q032031 | Tornillo alomado M-5x10 | | 2 | | | | | | | | | |
| 60 | Q032021 | Tornillo alomado M-4x10 | | 2 | | | | | | | | | |
| 61 | T140502 | Tapa cierre puerta | | 1 | | | | | | | | | |
| | | | | | | | | | | | | | |
| 61 | 1100002810 | KIT Cristal interior completo 20/21 | | 1 | | | | | | | | | |
| | | | | | | | | | | | | | |
| 62 | R140507 | Fijacion junta completa 20/21 | | 1 | | | | | | | | | |
| | Q033021 | Tornillo alomado M-4x10 ( laton ) | | 40 | | | | | | | | | |
| | Q222041 | Remache exagonal M-4 inox. | | 40 | | | | | | | | | |
| 63 | R140506 | Junta de puerta 20/21 | | 1 | | | | | | | | | |
| | | | | | | | | | | | | | |
| | | | | | | | | | | | | | |
| | | | | | | | | | | | | | |
| | | | | | | | | | | | | | |
| | | | | | | | | | | | | | |
| | | | | | | | | | | | | | |
| | | | | | | | | | | | | | |

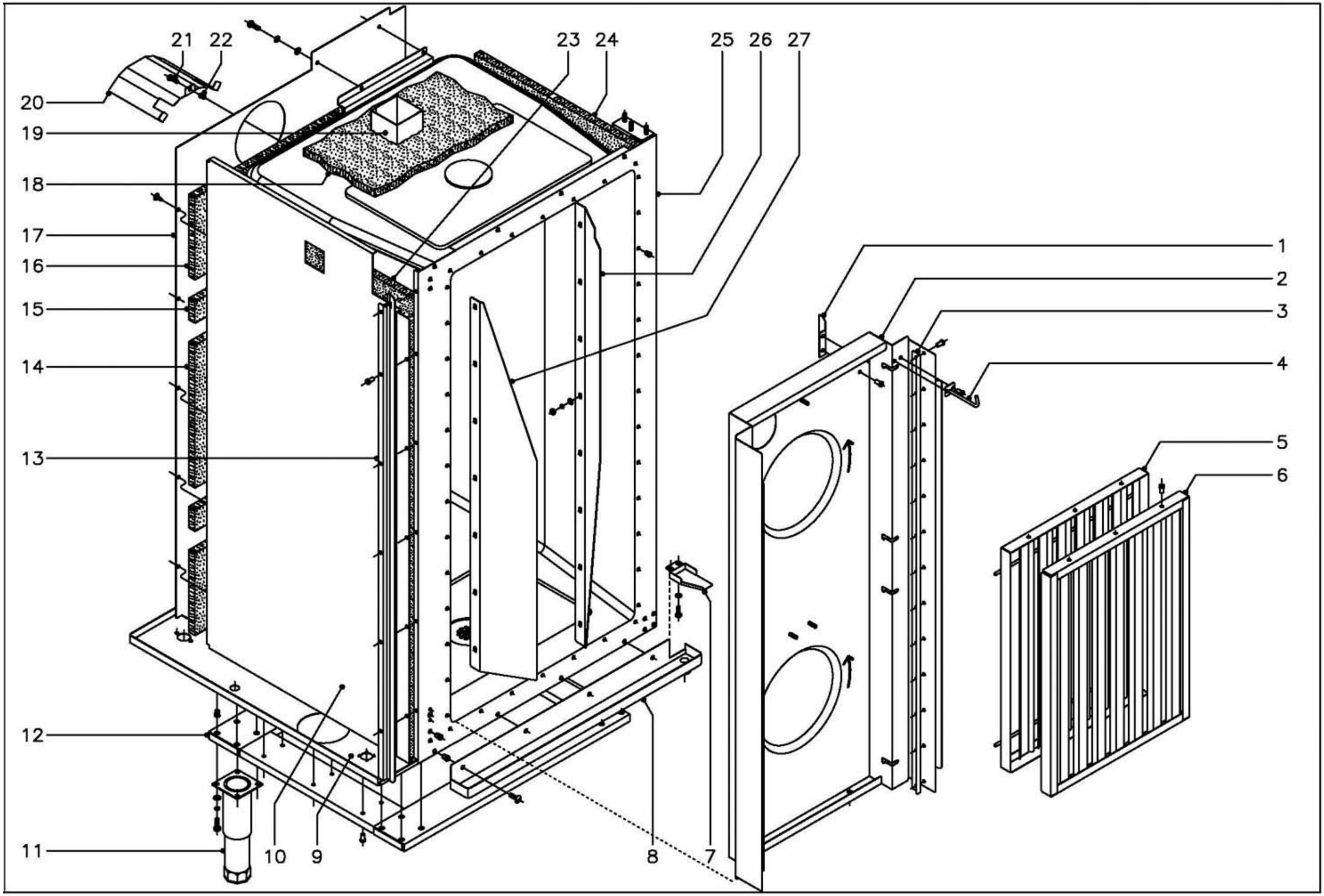


| N plano | Firma | Fecha | Aparato | Lamina | |
|---|---|---|---|---|---|
| C–1359 | | 5–2003 | MUEBLE INTERIOR<br>HORNOS A GAS HCG–20/21 | 3 | Fagor Industrial S.Coop. FAGOR<br>Oñate |

| MOD. | HORNO HCG | ZONA | MUEBLE INTERIOR | PLANO | C-1359 |
|---|---|---|---|---|---|

| ITEM | CODIGO | DENOMINACION | TEXTO | HCG-20/21 | | | | | | | | | NOTAS |
|---|---|---|---|---|---|---|---|---|---|---|---|---|---|
| 1 | R292647 | Escuadra sujecion cubreventilador | | 2 | | | | | | | | | |
| | Q412002 | Remache tubular Ø 4x7,5 | | 4 | | | | | | | | | |
| 2 | T152611 | Cubre ventilador | | 1 | | | | | | | | | |
| 3 | R092616 | Tope cubreventilador | | 2 | | | | | | | | | |
| | Q412002 | Remache tubular Ø 4x7,5 | | 26 | | | | | | | | | |
| 4 | R142615 | Fijacion portabandejas | | 2 | | | | | | | | | |
| | Q412002 | Remache tubular Ø 4x7,5 | | 4 | | | | | | | | | |
| 5 | R092621 | Posterior de filtro | | 2 | | | | | | | | | |
| 6 | R092618 | Anterior de filtro | | 2 | | | | | | | | | |
| | Q412002 | Remache tubular Ø 4x7,5 | | 12 | | | | | | | | | |
| 7 | R662800 | Cubrecables | | 1 | | | | | | | | | |
| | Q221342 | Remache exagonal M-5 | | 2 | | | | | | | | | |
| | Q232030 | Arandela plana A-5 | | 2 | | | | | | | | | |
| | Q012031 | Tornillo exagonal M-5x10 | | 2 | | | | | | | | | |
| 8 | T142820 | Recogeaguas | | 1 | | | | | | | | | |
| | Q221343 | Remache exagonal M-6 | | 4 | | | | | | | | | |
| | Q152017 | Tornillo amarre M-6x13 | | 4 | | | | | | | | | |
| 9 | T152811 | Base exterior de horno | | 1 | | | | | | | | | |
| 10 | T152604 | Soporte lateral aislante | | 1 | | | | | | | | | |
| 11 | R092830 | Pata regulable | | 4 | | | | | | | | | |
| | Q012043 | Tornillo exagonal M-6x20 | | 16 | | | | | | | | | |
| | Q262040 | Arandela muelle A-6 | | 16 | | | | | | | | | |
| | Q232040 | Arandela plana A-6 | | 16 | | | | | | | | | |
| | Q221343 | Remache exagonal M-6 | | 16 | | | | | | | | | |
| 12 | T152801 | Refuerzo de apoyos | | 1 | | | | | | | | | |
| | Q412002 | Remache tubular Ø 4x7,5 | | 28 | | | | | | | | | |
| 13 | R092662 | Protector de portamandos | | 1 | | | | | | | | | |
| | Q412002 | Remache tubular Ø 4x7,5 | | 7 | | | | | | | | | |
| 14 | U675605 | Aislante central 740x380x20 | | 1 | | | | | | | | | |

| MOD. | HORNO HCG | ZONA | MUEBLE INTERIOR | PLANO | C-1359 |
|---|---|---|---|---|---|

| ITEM | CODIGO | DENOMINACION | TEXTO | HCG-20/21 | | | | | | | | | NOTAS |
|---|---|---|---|---|---|---|---|---|---|---|---|---|---|
| 15 | R662616 | Aislante entre refuerzos 560x60x20 | | 8 | | | | | | | | | |
| 16 | R032625 | Aislante supe. e inferior 760x230x20 | | 2 | | | | | | | | | |
| 17 | T142608 | Soporte aislante posterior | | 1 | | | | | | | | | |
| | Q151301 | Tornillo alomado | | 5 | | | | | | | | | |
| | Q012042 | Tornillo exagonal M-6x15 | | 18 | | | | | | | | | |
| | Q262040 | Arandela muelle A-6 | | 18 | | | | | | | | | |
| | Q232040 | Arandela plana A-6 | | 18 | | | | | | | | | |
| 18 | R682623 | Aislante base y techo 860x790x20 | | 6 | | | | | | | | | |
| 19 | T152619 | Chimenea interior | | 1 | | | | | | | | | |
| | Q412002 | Remache tubular Ø 4x7,5 | | 6 | | | | | | | | | |
| 20 | R142628 | Tejadillo motor turbina | | 2 | | | | | | | | | |
| s/n | R142614 | Tejadillo ventilador soplante | | 1 | | | | | | | | | |
| 21 | Q012042 | Tornillo exagonal M-6x15 | | 5 | | | | | | | | | |
| 22 | Q221343 | Remache exagonal M-6 | | 5 | | | | | | | | | |
| 23 | R142608 | Aislante lateral 1370x860x20 | | 3 | | | | | | | | | |
| 24 | R142608 | Aislante lateral 1370x860x20 | | 2 | | | | | | | | | |
| 25 | T152600 | Cuerpo interior horno | | 1 | | | | | | | | | |
| 26 | T152617 | Deflector derecho de horno | | 1 | | | | | | | | | |
| 27 | T152616 | Deflector izquierdo de horno | | 1 | | | | | | | | | |
| | Q232040 | Arandela plana A-6 | | 15 | | | | | | | | | |
| | Q262040 | Arandela muelle A-6 | | 15 | | | | | | | | | |
| | Q162040 | Tuerca exagonal M-6 | | 15 | | | | | | | | | |
| | | | | | | | | | | | | | |
| | | | | | | | | | | | | | |
| | | | | | | | | | | | | | |
| | | | | | | | | | | | | | |
| | | | | | | | | | | | | | |
| | | | | | | | | | | | | | |
| | | | | | | | | | | | | | |

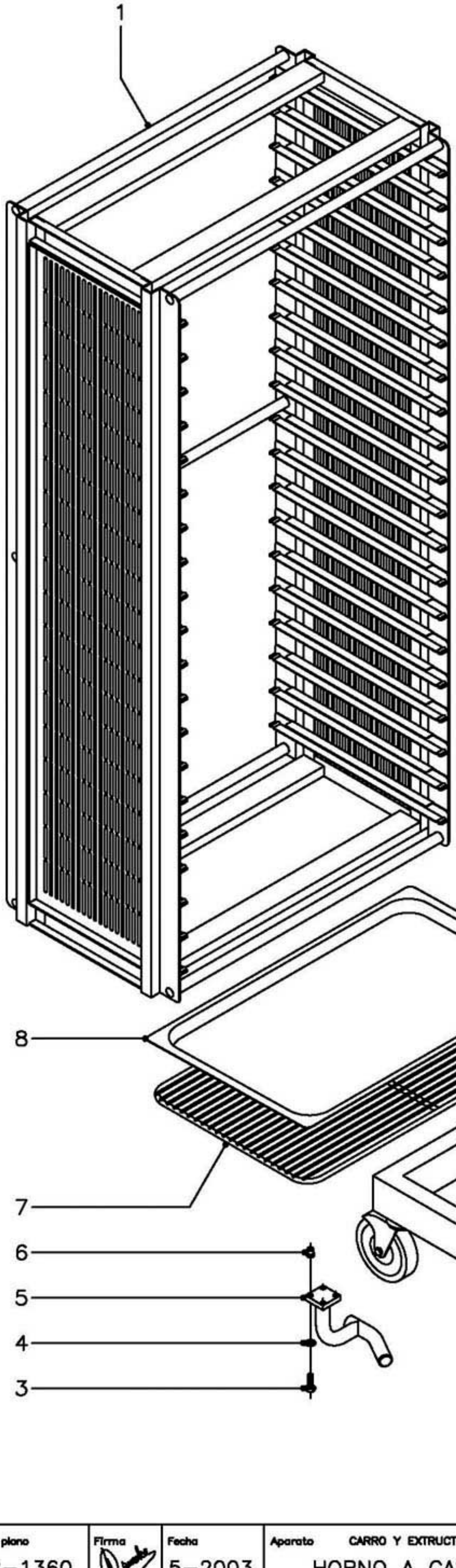


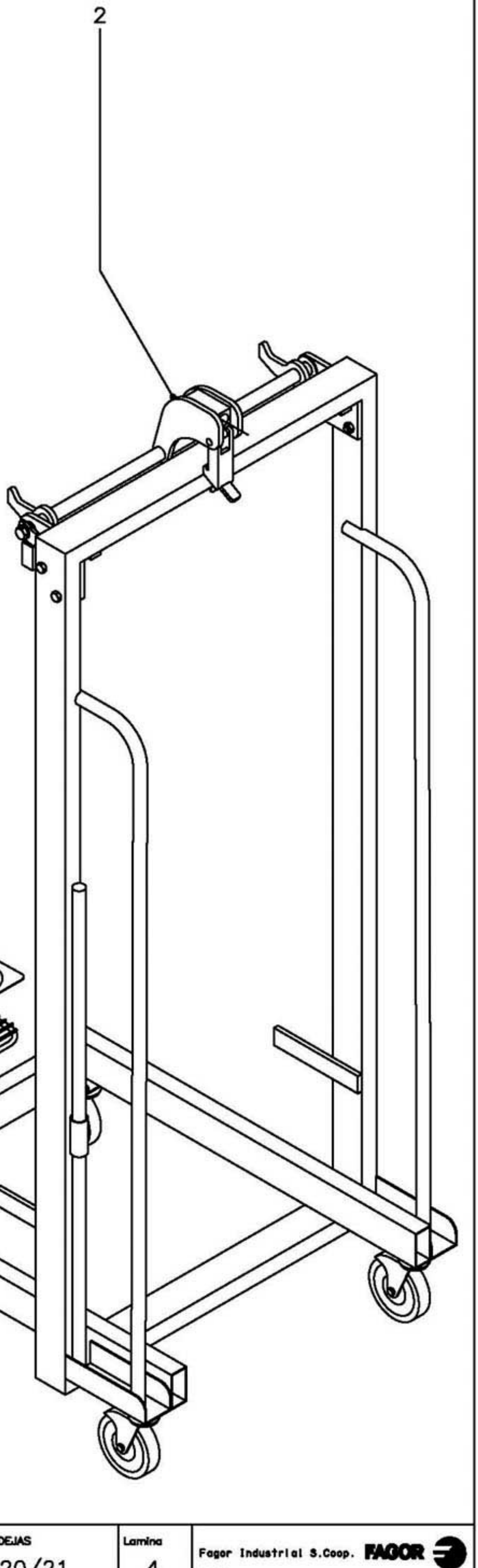


| N plano | Firma | Fecha | Aparato | Lamina | |
|---|---|---|---|---|---|
| C–1360 | | 5–2003 | CARRO Y EXTRUCTURA PORTABANDEJAS<br>HORNO A GAS HCG–20/21 | 4 | Fagor Industrial S.Coop.<br>Oñate |

| MOD. | HORNO HCG | ZONA | CARRO Y EXTRUCTURA PORTABANDEJAS | PLANO | C-1360 |
|---|---|---|---|---|---|

| ITEM | CODIGO | DENOMINACION | TEXTO | HCG-20/21 | HCG-2-20/11 | | | | | | | | NOTAS |
|---|---|---|---|---|---|---|---|---|---|---|---|---|---|
| 1 | R145640 | Portabandejas 20/21 | | 1 | - | | | | | | | | |
| s/n | R145650 | Portabandejas 2-20/11 | | - | 1 | | | | | | | | |
| 2 | R145630 | Carro portabandejas 20/21 | | 1 | 1 | | | | | | | | |
| 3 | Q012033 | Tornillo exagonal M-5x20 | | 8 | 8 | | | | | | | | |
| 4 | Q242030 | Arandela abanico A-5 | | 8 | 8 | | | | | | | | |
| 5 | T132815 | Suplemento guia izquierda de carro | | 1 | 1 | | | | | | | | |
| s/n | T132814 | Suplemento guia derecha de carro | | 1 | 1 | | | | | | | | |
| 6 | Q221342 | Remache exagonal M-5 | | 8 | 8 | | | | | | | | |
| 7 | R682676 | Parrilla de horno 2/1 | | 1 | - | | | | | | | | |
| s/n | R672665 | Parrilla de horno 1/1 | | - | 1 | | | | | | | | |
| 8 | R032605 | Bandeja de horno 2/1 P=40 | | 1 | - | | | | | | | | |
| s/n | R252816 | Bandeja de horno 1/1 P=20 | | - | 1 | | | | | | | | |
| | | | | | | | | | | | | | |
| | | | | | | | | | | | | | |
| | | | | | | | | | | | | | |
| | | | | | | | | | | | | | |
| | | | | | | | | | | | | | |
| | | | | | | | | | | | | | |
| | | | | | | | | | | | | | |
| | | | | | | | | | | | | | |
| | | | | | | | | | | | | | |
| | | | | | | | | | | | | | |
| | | | | | | | | | | | | | |
| | | | | | | | | | | | | | |
| | | | | | | | | | | | | | |
| | | | | | | | | | | | | | |
| | | | | | | | | | | | | | |
| | | | | | | | | | | | | | |

N plano
C-1361

Firma

Fecha
5-2003

Aparato
HORNO A GAS HCG-20/21

TURBINA

Lamina
5

Fagor Industrial S.Coop.
Oñate

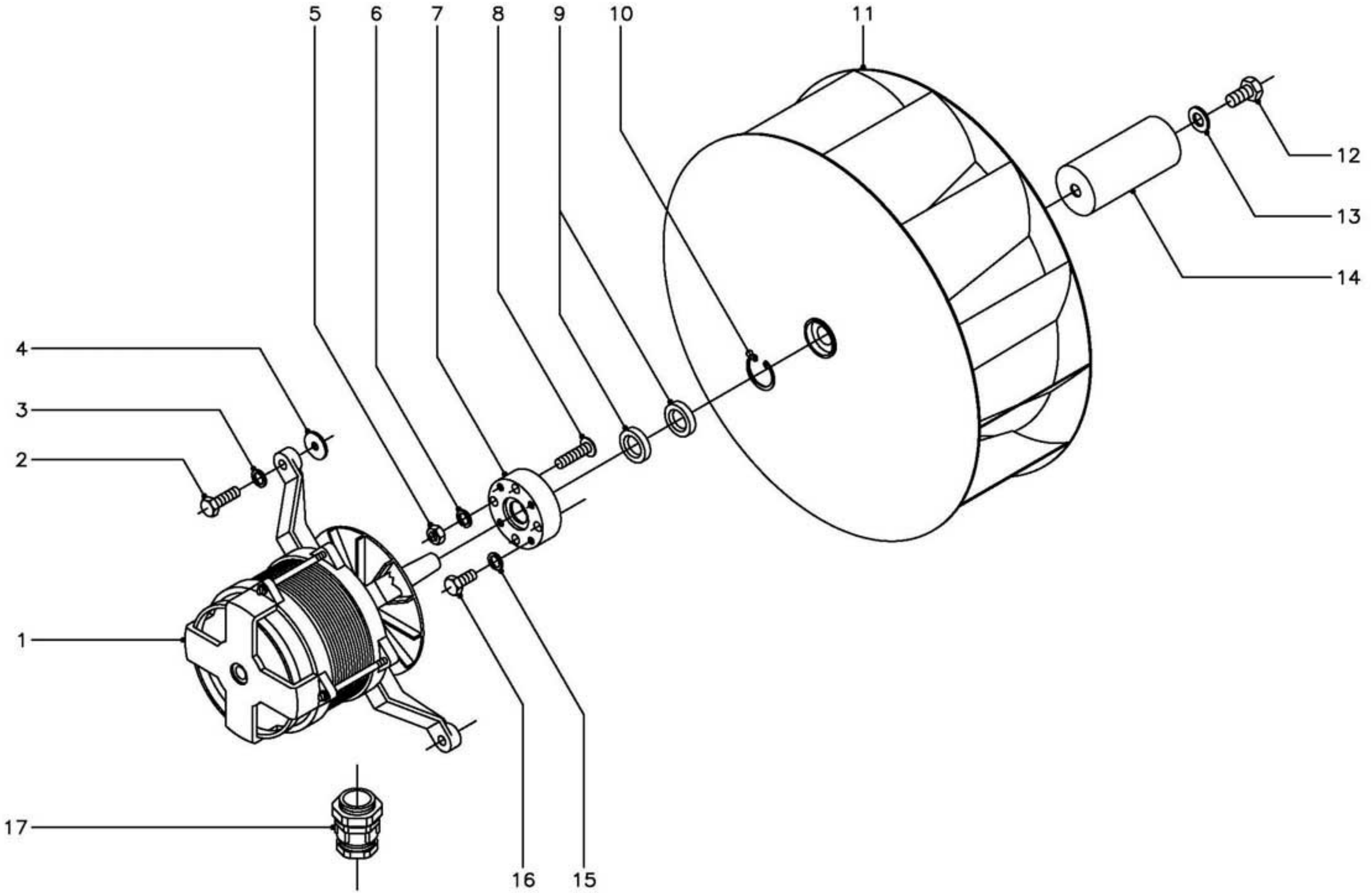

| MOD. | HORNO HCG | ZONA | TURBINA | PLANO | C-1361 |
|---|---|---|---|---|---|

| ITEM | CODIGO | DENOMINACION | TEXTO | HCG-20/21 | | | | | | | | | NOTAS |
|---|---|---|---|---|---|---|---|---|---|---|---|---|---|
| 1 | R253049 | Conj. motor ( 230/400 V., 50/60 Hz.) | | 2 | | | | | | | | | |
| 2 | Q012044 | Tornillo exagonal M-6x25 | | 8 | | | | | | | | | |
| 3 | Q262040 | Arandela muelle A-6 | | 8 | | | | | | | | | |
| 4 | Q301304 | Arandela calzo Ø 23xØ 6,5x2 | | 16 | | | | | | | | | |
| 5 | Q162040 | Tuerca exagonal M-6 | | 8 | | | | | | | | | |
| 6 | Q262040 | Arandela muelle A-6 | | 8 | | | | | | | | | |
| 7 | R662623 | Casquillo reten | | 2 | | | | | | | | | |
| 8 | - | Perno M-6 ( Caldeado a cuerpo ) | | 8 | | | | | | | | | |
| 9 | R662627 | Reten Ø 28xØ 17x7 | | 4 | | | | | | | | | |
| 10 | Q302023 | Anillo de seguridad Ø 28x1,2 | | 2 | | | | | | | | | |
| 11 | R253042 | Turbina | | 2 | | | | | | | | | |
| 12 | Q012063 | Tornillo exagonal M-10x20 | | 2 | | | | | | | | | |
| 13 | R763010 | Arandela seguridad Hanning | | 2 | | | | | | | | | |
| 14 | R665025 | Distribuidor inyeccion | | 2 | | | | | | | | | |
| 15 | Q232030 | Arandela muelle A-5 | | 8 | | | | | | | | | |
| 16 | Q012031 | Tornillo exagonal M-5x10 | | 8 | | | | | | | | | |
| 17 | R073004 | Prensaestopas | | 1 | | | | | | | | | |

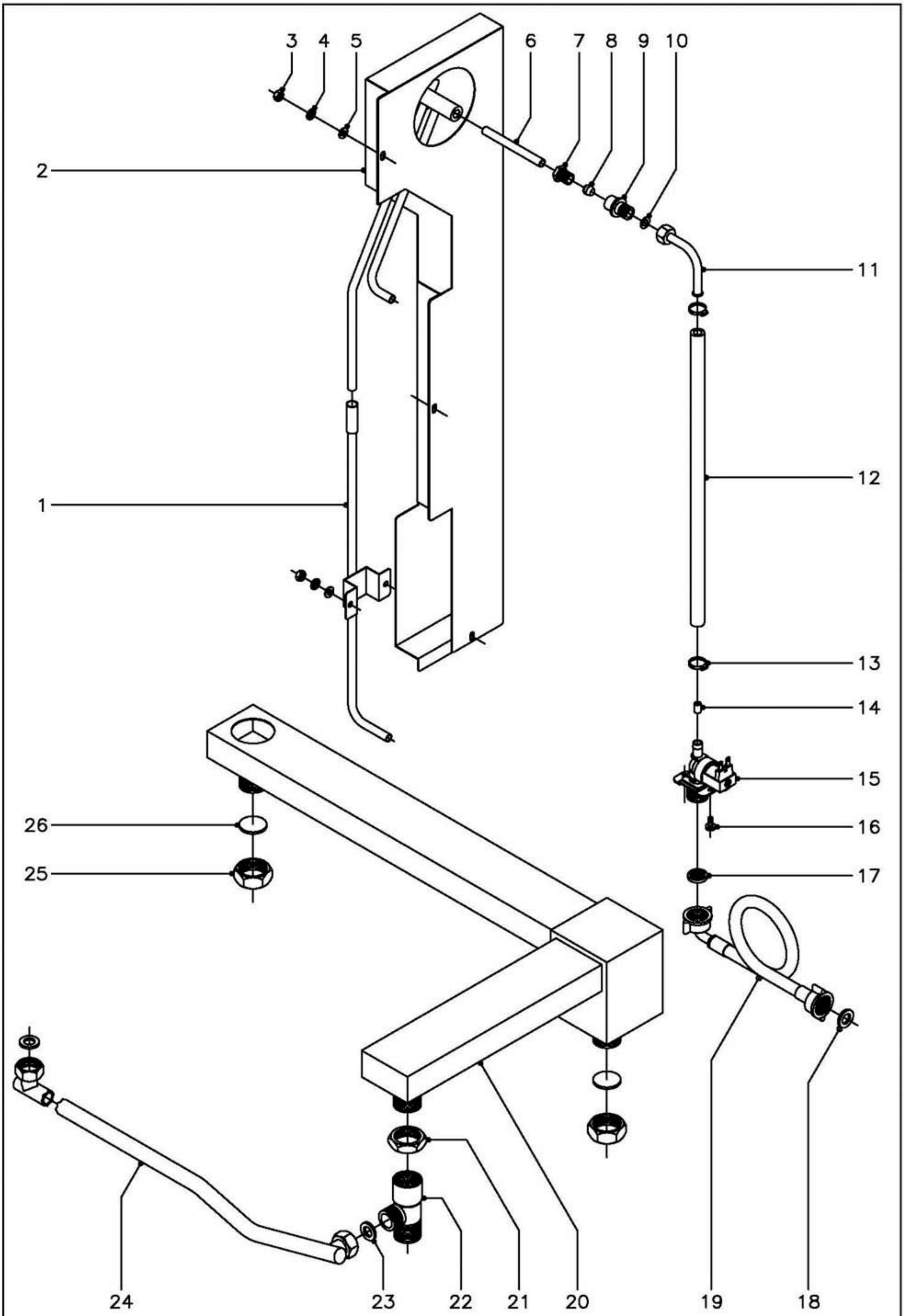


| N plano | Firma | Fecha | Aparato | Lamina | |
|---|---|---|---|---|---|
| C–1362 | | 5–2003 | CIRCUITO DE AGUA<br>HORNO A GAS HCG–20/21 | 6 | Fagor Industrial S.Coop. FAGOR<br>Oñate |

| MOD. | HORNO HCG | ZONA | CIRCUITO DE AGUA | PLANO | C-1362 |
|---|---|---|---|---|---|

| ITEM | CODIGO | DENOMINACION | TEXTO | HCG-20/21 | | | | | | | | | NOTAS |
|---|---|---|---|---|---|---|---|---|---|---|---|---|---|
| 1 | T155012 | Alargadera inyector | | 1 | | | | | | | | | |
| 2 | T152607 | Conduccion de humos completa | | 1 | | | | | | | | | |
| 3 | Q162030 | Tuerca exagonal M-5 | | 5 | | | | | | | | | |
| 4 | Q242030 | Arandela abanico A-5 | | 5 | | | | | | | | | |
| 5 | Q232030 | Arandela plana A-5 | | 5 | | | | | | | | | |
| 6 | R665024 | Tubo conduccion inyector | | 1 | | | | | | | | | |
| 7 | R695003 | Manguito cierre | | 1 | | | | | | | | | |
| 8 | R695004 | Bicono | | 1 | | | | | | | | | |
| 9 | - | Casquillo soldado a cuerpo horno | | 1 | | | | | | | | | |
| 10 | Q306026 | Arandela junta Ø 14xØ 8,5x1,5 | | 1 | | | | | | | | | |
| 11 | R695017 | Tubo conduccion agua | | 1 | | | | | | | | | |
| 12 | 3676900 | Tubo goma negra Ø17xØ10x1200 | | 1 | | | | | | | | | |
| 13 | Q881302 | Abrazadera 12 - 20 | | 2 | | | | | | | | | |
| 14 | R715011 | Regulador caudal 0,5 l./m. (rojo) | | 1 | | | | | | | | | |
| 15 | Z701135 | Electrovalvula entrada agua | | 1 | | | | | | | | | |
| 16 | Q032021 | Tornillo alomado M-4x10 | | 2 | | | | | | | | | |
| 17 | Z701132 | Filtro-junta entrada de agua | | 1 | | | | | | | | | |
| 18 | Q307031 | Junta manguera Ø24xØ14x3 | | 1 | | | | | | | | | |
| 19 | Z601114 | Manguera entrada agua | | 1 | | | | | | | | | |
| 20 | - | Tubo desagüe completo | | 1 | | | | | | | | | Soldado a cuerpo de horno |
| 21 | Q223014 | Contratuerca 1" | | 1 | | | | | | | | | |
| 22 | R145036 | Manguito desagüe | | 1 | | | | | | | | | |
| 23 | Q307031 | Arandela junta Ø 24xØ 14x3 | | 2 | | | | | | | | | |
| 24 | R145034 | Conduccion recogeaguas | | 1 | | | | | | | | | |
| 25 | R665053 | Tuerca tapon | | 2 | | | | | | | | | |
| 26 | R015011 | Arandela junta Ø 34x3 | | 2 | | | | | | | | | |
| | | | | | | | | | | | | | |
| | | | | | | | | | | | | | |
| | | | | | | | | | | | | | |

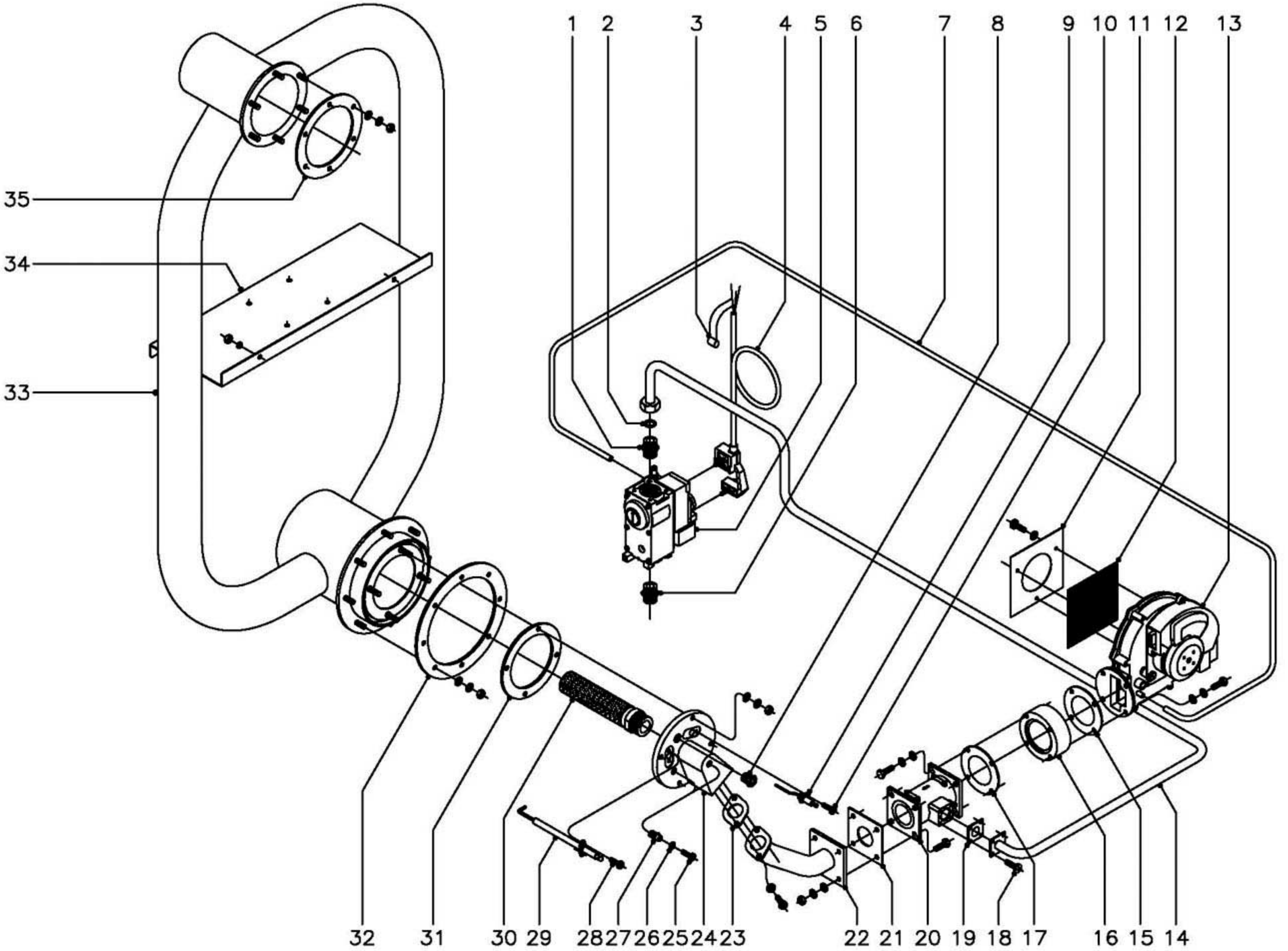


| N plano | Firma | Fecha | Aparato | Lamina | |
|---|---|---|---|---|---|
| C–1363 | | 5–2003 | PARTE FUNCIONAL GAS<br>HORNO A GAS HCG–20/21 | 7 | Fagor Industrial S.Coop. FAGOR<br>Onate |

| MOD. | HORNO HCG | ZONA | PARTE FUNCIONAL GAS | PLANO | C-1363 |
|---|---|---|---|---|---|

| ITEM | CODIGO | DENOMINACION | TEXTO | HCG-20/21 | | | | | | | | | NOTAS |
|---|---|---|---|---|---|---|---|---|---|---|---|---|---|
| 1 | S205023 | Manguito doble 1/2" | | 1 | | | | | | | | | |
| 2 | Q306012 | Arandela junta Ø18xØ13x1,5 | | 1 | | | | | | | | | |
| 3 | Z233012 | Condensador antiparasitario | | 1 | | | | | | | | | |
| 4 | T085012 | Conector valvula Honeywell | | 1 | | | | | | | | | |
| 5 | T155018 | Valvula Honeywell ( Regulado a B.P.) | | 1 | | | | | | | | | ( 50 Hz.) |
| 5 | T155019 | Valvula Honeywell ( Regulado a G.N.) | | 1 | | | | | | | | | ( 50 Hz.) |
| 5 | T155020 | Valvula Honeywell ( Regulado a B.P.) | | 1 | | | | | | | | | ( 60 Hz.) |
| 5 | T155021 | Valvula Honeywell ( Regulado a G.N.) | | 1 | | | | | | | | | ( 60 Hz.) |
| 6 | S205023 | Manguito doble 1/2" | | 1 | | | | | | | | | |
| 7 | 3702400 | Tubo goma negra Ø 8xØ 4x1500 | | 1 | | | | | | | | | |
| 8 | R725015 | Visor de encendido | | 1 | | | | | | | | | |
| 9 | T135705 | Electrodo de deteccion | | 1 | | | | | | | | | |
| 10 | Q153021 | Tornillo alomado M-4x10 | | 1 | | | | | | | | | |
| 11 | T115096 | Chapa amarre malla ventilador | | 1 | | | | | | | | | |
| | Q032021 | Tornillo alomado M-4x10 | | 3 | | | | | | | | | |
| | Q242020 | Arandela abanico A-4 | | 3 | | | | | | | | | |
| 12 | T115095 | Malla ventilador | | 1 | | | | | | | | | |
| 13 | T143000 | Ventilador E.B.M.-RG-148 | | 1 | | | | | | | | | |
| 14 | T025000 | Conduccion de gas completo | | 1 | | | | | | | | | |
| 15 | T115081 | Junta acoplamiento ventilador y mixer | | 1 | | | | | | | | | |
| 16 | T115076 | Acoplamiento ventilador mixer | | 1 | | | | | | | | | |
| 17 | T115081 | Junta acoplamiento ventilador y mixer | | 1 | | | | | | | | | |
| 18 | Q032021 | Tornillo alomado M-4x10 | | 4 | | | | | | | | | |
| 19 | T115080 | Junta conduccion mixer | | 1 | | | | | | | | | |
| 20 | T115075 | Mixer 35 KW. | | 1 | | | | | | | | | |
| 21 | T115079 | Junta mixer conducto | | 1 | | | | | | | | | |
| 22 | T115077 | Conducto mixer tapa principal | | 1 | | | | | | | | | |
| 23 | T095021 | Junta conducto tapa | | 1 | | | | | | | | | |
| 24 | R725710 | Tapa principal | | 1 | | | | | | | | | |

| MOD. | HORNO HCG | ZONA | PARTE FUNCIONAL GAS | PLANO | C-1363 |
|---|---|---|---|---|---|

| ITEM | CODIGO | DENOMINACION | TEXTO | HCG-20/21 | | | | | | | | | NOTAS |
|---|---|---|---|---|---|---|---|---|---|---|---|---|---|
| | Q232030 | Arandela plana A-5 | | 4 | | | | | | | | | |
| | Q242030 | Arandela abanico A-5 | | 4 | | | | | | | | | |
| | Q163030 | Tuerca exagonal M-5 laton | | 4 | | | | | | | | | |
| 25 | Q152024 | Tornillo avellanado M-4x8 | | 2 | | | | | | | | | |
| 26 | R725061 | Junta toma de presion | | 2 | | | | | | | | | |
| 27 | R725017 | Boquilla toma de presion | | 2 | | | | | | | | | |
| 28 | Q153021 | Tornillo alomado M-4x10 | | 1 | | | | | | | | | |
| 29 | T135706 | Electrodo de ignicion | | 1 | | | | | | | | | |
| 30 | T145712 | Quemador Furigas (20/11 y 20/21) | | 1 | | | | | | | | | |
| 31 | R725055 | Junta de tapa principal | | 1 | | | | | | | | | |
| 32 | T145710 | Junta camara combustion | | 1 | | | | | | | | | |
| 33 | T155700 | Intercambiador completo | | 1 | | | | | | | | | |
| | Q232040 | Arandela plana A-6 | | 14 | | | | | | | | | |
| | Q262040 | Arandela muelle A-6 | | 14 | | | | | | | | | |
| | Q163140 | Tuerca exagonal M-6 laton | | 14 | | | | | | | | | |
| 34 | T092615 | Separador central | | 1 | | | | | | | | | |
| | Q262040 | Arandela muelle A-6 | | 2 | | | | | | | | | |
| | Q162040 | Tuerca exagonal M-6 | | 2 | | | | | | | | | |
| 35 | T145711 | Junta de colector | | 1 | | | | | | | | | |
| | | | | | | | | | | | | | |
| | | | | | | | | | | | | | |
| | | | | | | | | | | | | | |
| | | | | | | | | | | | | | |
| | | | | | | | | | | | | | |
| | | | | | | | | | | | | | |
| | | | | | | | | | | | | | |
| | | | | | | | | | | | | | |
| | | | | | | | | | | | | | |
| | | | | | | | | | | | | | |

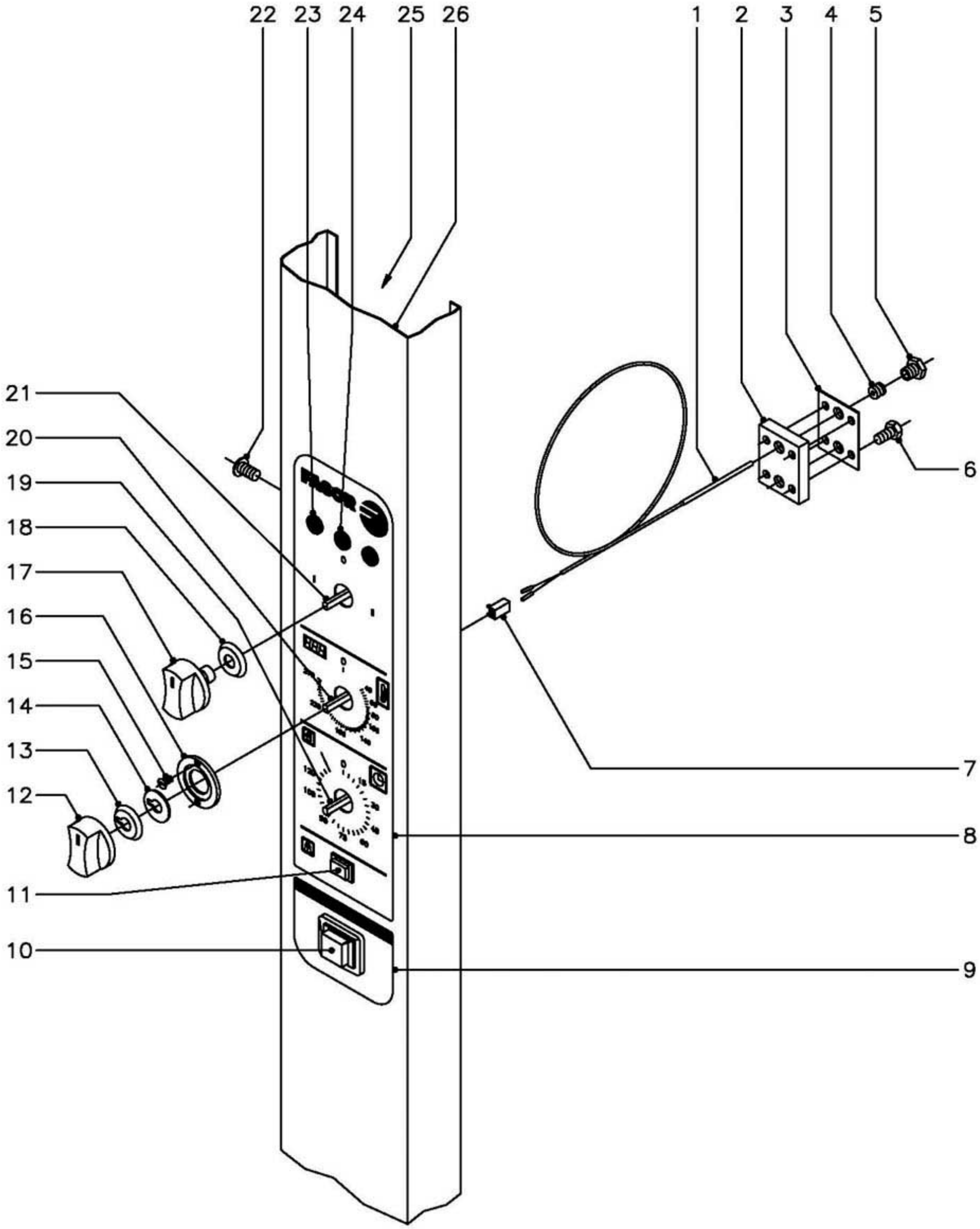


| N plano | Firma | Fecha | Aparato | Lamina | |
|---|---|---|---|---|---|
| C–1364 | | 5–2003 | PARTE ELECTRICA PORTAMANDOS<br>HORNO A GAS HCG–20/21 | 8 | Fagor Industrial S.Coop. FAGOR<br>Onate |

| MOD. | HORNO HCG | ZONA | PARTE ELECTRICA PORTAMANDOS | PLANO | C-1364 |
|---|---|---|---|---|---|

| ITEM | CODIGO | DENOMINACION | TEXTO | HCG-20/21 | | | | | | | | | NOTAS |
|---|---|---|---|---|---|---|---|---|---|---|---|---|---|
| 1 | R663090 | Conjunto termopar L=1400 | | 1 | | | | | | | | | |
| 2 | R662659 | Pasamuros doble | | 1 | | | | | | | | | |
| 3 | R692811 | Junta pasamuros doble | | 1 | | | | | | | | | |
| 4 | R662652 | Bicono cierre sonda | | 1 | | | | | | | | | |
| 5 | R662629 | Racord cierre sonda | | 1 | | | | | | | | | |
| 6 | Q012021 | Tornillo exagonal M-4x10 | | 4 | | | | | | | | | |
| 7 | R663092 | Conector 2 vias | | 1 | | | | | | | | | |
| 8 | T013006 | Serigrafia superior | | 1 | | | | | | | | | |
| 9 | R723008 | Serigrafia inferior | | 1 | | | | | | | | | |
| 10 | Z213033 | Pulsador de rearme | | 1 | | | | | | | | | |
| 11 | R663032 | Pulsador | | 1 | | | | | | | | | |
| 12 | R663063 | Boton de mando Ø6 (termos.elec.) | | 1 | | | | | | | | | |
| 13 | R663045 | Junta (termostato electronico) | | 1 | | | | | | | | | |
| 14 | R662810 | Arandela guia | | 1 | | | | | | | | | |
| 15 | Q151346 | Tornillo avellanado M-3x5 | | 2 | | | | | | | | | |
| 16 | R662809 | Guia boton de mando | | 1 | | | | | | | | | |
| 17 | R663062 | Boton de mando Ø6 (conmutadores) | | 2 | | | | | | | | | |
| 18 | R663046 | Junta (conmutadores) | | 2 | | | | | | | | | |
| 19 | R723000 | Temporizador manual | | 1 | | | | | | | | | |
| 20 | R743013 | Termostato electronico 0 - 270º C. | | 1 | | | | | | | | | |
| | R663036 | Fijacion circuito termost. electroni. | | 4 | | | | | | | | | |
| 21 | T013001 | Conmutador de funciones | | 1 | | | | | | | | | |
| 22 | Q152004 | Tornillo aplastado M-5x13 | | 2 | | | | | | | | | |
| 23 | R693056 | Piloto ambar | | 2 | | | | | | | | | |
| 24 | R693055 | Piloto verde | | 1 | | | | | | | | | |
| 25 | T012803 | Soporte componentes | | 1 | | | | | | | | | |
| 26 | T102813 | Panel portamandos | | 1 | | | | | | | | | |
| | | | | | | | | | | | | | |
| | | | | | | | | | | | | | |

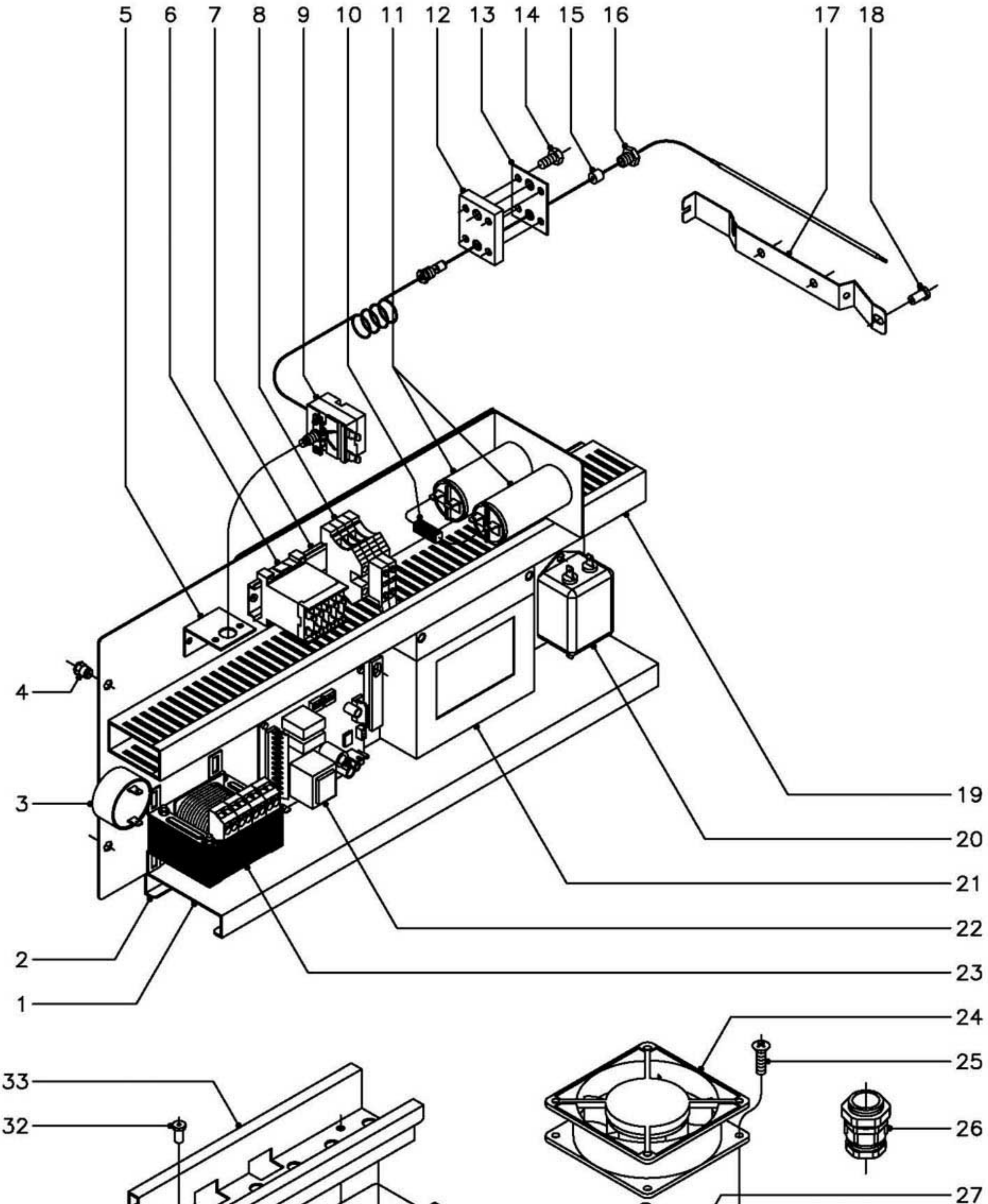


| N plano | Firma | Fecha | Aparato | Lamina | |
|---|---|---|---|---|---|
| C–1365 | | 5–2003 | PANEL CUADRO ELECTRICO<br>HORNO A GAS HCG–20/21 | 9 | Fagor Industrial S.Coop.<br>Oñate |

| MOD. | HORNO HCG | ZONA | PANEL CUADRO ELECTRICO | PLANO | C-1365 |
|---|---|---|---|---|---|

| ITEM | CODIGO | DENOMINACION | TEXTO | HCG-20/21 | | | | | | | | | NOTAS |
|---|---|---|---|---|---|---|---|---|---|---|---|---|---|
| 1 | T083003 | Panel cuadro electrico | | 1 | | | | | | | | | |
| 2 | R723101 | Contraguia panel cuadro electrico | | 1 | | | | | | | | | |
| | Q412002 | Remache tubular Ø 4x7,5 | | 8 | | | | | | | | | |
| 3 | R693067 | Zumbador | | 1 | | | | | | | | | |
| 4 | Q221342 | Remache exagonal M-5 | | 2 | | | | | | | | | |
| 5 | R343039 | Soporte termostato | | 1 | | | | | | | | | |
| 6 | Z683087 | Contactor | | 1 | | | | | | | | | |
| 7 | R663055 | Guia contactor L=120 | | 1 | | | | | | | | | |
| 8 | R073005 | Borna portafusible | | 2 | | | | | | | | | |
| | R723015 | Fusible cristal 10 A. | | 2 | | | | | | | | | |
| | P453026 | Borne tierra 10 | | 1 | | | | | | | | | |
| | Z263303 | Tope final | | 1 | | | | | | | | | |
| 9 | R243016 | Termostato limitador | | 1 | | | | | | | | | |
| | Q162050 | Tuerca exagonal M-8x1 | | 1 | | | | | | | | | |
| 10 | R073008 | Cableado PTC | | 1 | | | | | | | | | |
| 11 | T093005 | Condensador | | 2 | | | | | | | | | |
| 12 | R662659 | Pasamuros doble | | 1 | | | | | | | | | |
| 13 | R692811 | Junta pasamuros doble | | 1 | | | | | | | | | |
| 14 | Q012021 | Tornillo exagonal M-4x10 | | 4 | | | | | | | | | |
| 15 | R662662 | Junta cierre bulbo limitador | | 1 | | | | | | | | | |
| 16 | R662629 | Racord cierre sonda | | 1 | | | | | | | | | |
| 17 | R662630 | Soporte bulbo | | 1 | | | | | | | | | |
| 18 | Q412002 | Remache tubular Ø 4x7,5 | | 3 | | | | | | | | | |
| 19 | 3715520 | Canaleta unex ( 60x30xlonjitud ) | | 4 | | | | | | | | | |
| 20 | T113023 | Filtro de entrada modelo FF-6Z | | 1 | | | | | | | | | |
| 21 | Z953004 | Control combustion | | 1 | | | | | | | | | |
| 22 | T083002 | Variador de velocidad | | 1 | | | | | | | | | |
| | T133007 | Distanciador M-3 | | 4 | | | | | | | | | Amarre variador a cuadro |
| | T133008 | Tornillo amarre M-3x23 ( plastico ) | | 4 | | | | | | | | | Amarre variador a cuadro |

| MOD. | HORNO HCG | ZONA | PANEL CUADRO ELECTRICO | PLANO | C-1365 |
|---|---|---|---|---|---|

| ITEM | CODIGO | DENOMINACION | TEXTO | HCG-20/21 | | | | | | | | | NOTAS |
|---|---|---|---|---|---|---|---|---|---|---|---|---|---|
| | Q161310 | Tuerca exagonal M-3 | | 4 | | | | | | | | Amarre variador a cuadro | |
| 23 | R503005 | Transformador | | 1 | | | | | | | | | |
| 24 | Z103066 | Ventilador 230 V., 50 - 60 Hz. | | 2 | | | | | | | | | |
| 25 | Q042022 | Tornillo avellanado M-4x15 | | 8 | | | | | | | | | |
| 26 | R073004 | Prensaestopas | | 1 | | | | | | | | | |
| 27 | T113015 | Protector ventilador | | 2 | | | | | | | | | |
| 28 | Q242020 | Arandela abanico A-4 | | 8 | | | | | | | | | |
| 29 | Q162020 | Tuerca exagonal M-4 | | 16 | | | | | | | | | |
| 30 | Q411304 | Remache avibulb Ø 4,8 | | 4 | | | | | | | | | |
| 31 | T083004 | Pedestal cuadro electrico | | 1 | | | | | | | | | |
| 32 | Q411304 | Remache avibulb Ø 4,8 | | 4 | | | | | | | | | |
| 33 | R342821 | Guia cuadro electrico | | 1 | | | | | | | | | |

| MOD. | HORNO HCG | ZONA | VARIOS | PLANO | |
|---|---|---|---|---|---|

| ITEM | CODIGO | DENOMINACION | TEXTO | HCG-20/21 | | | | | | | | | NOTAS |
|---|---|---|---|---|---|---|---|---|---|---|---|---|---|
| | T116502 | Folleto de instrucciones | | 1 | | | | | | | | | |
| | T013044 | Esquema electrico adhesivo | | 1 | | | | | | | | | Plano HC-75723 |
| | T113028 | Leyenda esquema electrico | | 1 | | | | | | | | | Plano HC-75483 |
| | T013046 | Esquema electrico de montaje | | 1 | | | | | | | | | Plano HD-12792 |
| | T013045 | Instalacion electrica | | 1 | | | | | | | | | |
| | T113035 | Cableado luz interior | | 1 | | | | | | | | | |
| | R093021 | Cableado luz puerta | | 1 | | | | | | | | | |
| | 3713900 | Funda roja o negra Ø 6,4x500 | | 1 | | | | | | | | | |
| | T123010 | Cable de encendido L=2200 | | 1 | | | | | | | | | |
| | T143002 | Cableado ventilador soplante | | 1 | | | | | | | | | |
| | T133001 | Cableado conexión 2 motores | | 1 | | | | | | | | | |
| | R093004 | Cable prolongador | | 1 | | | | | | | | | |
| | | | | | | | | | | | | | |
| | | | | | | | | | | | | | |
| | | | | | | | | | | | | | |
| | | | | | | | | | | | | | |
| | | | | | | | | | | | | | |
| | | | | | | | | | | | | | |
| | | | | | | | | | | | | | |
| | | | | | | | | | | | | | |
| | | | | | | | | | | | | | |
| | | | | | | | | | | | | | |
| | | | | | | | | | | | | | |
| | | | | | | | | | | | | | |
| | | | | | | | | | | | | | |
| | | | | | | | | | | | | | |
| | | | | | | | | | | | | | |
| | | | | | | | | | | | | | |
| | | | | | | | | | | | | | |

| MOD. | HORNO HCG | ZONA | PIEZAS ESPECIFICAS PARA LOS DISTINTOS GASES (B.P. Y G.N.) Y DISTINTAS FRECUENCIAS (50 Y 60 Hz.) | PLANO | C-1363 |
|---|---|---|---|---|---|

| ITEM | CODIGO | DENOMINACION | TEXTO | HCG-20/21 | | | | | | | | | NOTAS |
|---|---|---|---|---|---|---|---|---|---|---|---|---|---|
| | | **BUTANO - PROPANO 50 Hz.** | | | | | | | | | | | |
| 5 | T155018 | Valvula Honeywell 50Hz. (B.P.) | | 1 | | | | | | | | | |
| | | | | | | | | | | | | | |
| | | | | | | | | | | | | | |
| | | | | | | | | | | | | | |
| | | | | | | | | | | | | | |
| | | **BUTANO - PROPANO 60 Hz.** | | | | | | | | | | | |
| 5 | T155020 | Valvula Honeywell 60Hz. (B.P.) | | 1 | | | | | | | | | |
| | | | | | | | | | | | | | |
| | | | | | | | | | | | | | |
| | | | | | | | | | | | | | |
| | | | | | | | | | | | | | |
| | | **GAS NATURAL 50 Hz.** | | | | | | | | | | | |
| 5 | T155019 | Valvula Honeywell 50Hz. (G.N.) | | 1 | | | | | | | | | |
| | | | | | | | | | | | | | |
| | | | | | | | | | | | | | |
| | | | | | | | | | | | | | |
| | | | | | | | | | | | | | |
| | | **GAS NATURAL 60 Hz.** | | | | | | | | | | | |
| 5 | T155021 | Valvula Honeywell 60Hz. (G.N.) | | 1 | | | | | | | | | |
| | | | | | | | | | | | | | |
| | | | | | | | | | | | | | |
| | | | | | | | | | | | | | |
| | | | | | | | | | | | | | |
| | | | | | | | | | | | | | |
| | | | | | | | | | | | | | |
| | | | | | | | | | | | | | |
| | | | | | | | | | | | | | |
| | | | | | | | | | | | | | |

| MOD. | HORNOS A GAS HCG<br>HORNOS A GAS VCG ( VAUBAN ) | ZONA | SERIGRAFIA PORTAMANDOS ( VAUBAN ) | PLANO | C-1357 |
|---|---|---|---|---|---|

| ITEM | CODIGO | DENOMINACION | TEXTO | VCG-20/21<br>HCG-20/21 | VCG-2-20/11<br>HCG-2-20/11 | | | | | | | | NOTAS |
|---|---|---|---|---|---|---|---|---|---|---|---|---|---|
| 10 | T013030 | Serigrafia superior VCG -VAUBAN | | 1 | 1 | | | | | | | | |
| 11 | R723048 | Serigrafia inferior VCG -VAUBAN | | 1 | 1 | | | | | | | | |

# HCG-6/11 HCG-10/11 HCG-10/21 HCG-20/11 HCG-20/21

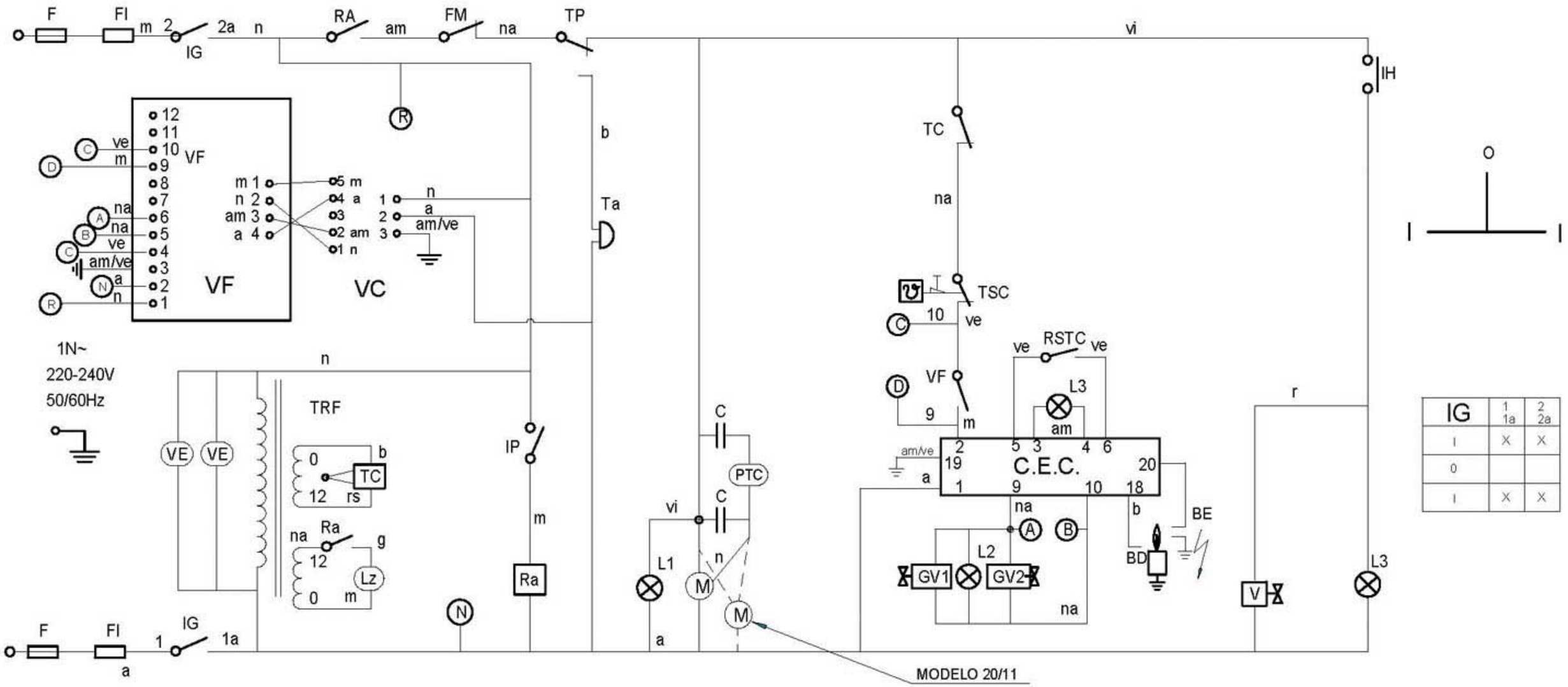


| IG | 1<br>1a | 2<br>2a |
|---|---|---|
| I | X | X |
| 0 | | |
| I | X | X |

| | | | | | |
|---|---|---|---|---|---|
| | ESQUEMA TEORICO ADHESIVO | | T-013044 | | |
| Nº | Pieza | | Material | Nº Clasificacion | Acabado |
| Nº | Modificacion | | Propuesta de | Fecha | Tolerancias generales |
| | | | | | <5± 5–25± 25–50± 50–100± >100± X± |
| | | Firma | Fecha | FAGOR | Mecanizado superficial |
| | Dibujado | KONTXI | 5/6/01 | Fagor Industrial,Koop.Elk, Mugatua | |
| | Proyectado | | | | |
| | Comprobado | | | | |
| | Escala | HORNOS HCG | | | Plano numero HC-75723 |
| | | Plano hau ez dateke erabil ez berrizta gure baimentz gabe | | | Sustituye al Nº |
| | | | | | Sustituido por |

# ESPAÑOL

CODIGO DE COLORES:
r = rojo
a = azul
m = marron
g = gris
n = negro
b = blanco
vi = violeta
am = amarillo
na = naranja
rs = rosa
ve = verde
am/ve = amarillo verde

COMPONENTES:

BD = Bujia de detector de llama
BE = Bujia de Encendido
C = Condensador Motor
**C.E.C. = Control Encendido cámara**
C.E.V. = Control encendido vapor
CN = Control nivel de agua
① F, F1, F2, F3 = Fusible
FI= Filtro interferencias
**FM = Térmico Motor**
**GV1 = Electroválvula de gas cámara (Control)**
**GV2 = Electroválvula de gas cámara (Seguridad)**
**GV4 = Electroválvula de gas vapor (Control)**
**GV5 = Electroválvula de gas vapor (Seguridad)**
Ia = Micro chimenea abierta
Ic = Micro chimenea cerrada
IG = Interruptor general
IP = Interruptor puerta
**IR = Selector regulador sonda núcleo**
**L1 = Lámpara de funcionamiento**
**L2 = Lámpara calentamiento cámara**
**L4 = Lámpara entrada de vapor**
**L3 = Lámpara indicador de bloqueo cámara**
**L5 = Lámpara indicador de bloqueo vapor**
**L6 = Lámpara seguridad de vapor**
**L7 = Lámpara detección de cal**
**Lz = Luz interior cámara**
M = Motor
M1 = Motor accionamiento chimenea
**R2, R1, Ra = Relé Auxiliar**
**RE1= Regulador de energía**
**RSTC = Pulsador de rearme cámara**
RSTV = Pulsador de rearme vapor
**RTS = Regulador sonda núcleo**
T100 = Termostato fijo 100°C
Ta = Timbre avisador
**TC = Termostato cámara**
**TCN = Termostato condensación**
**TDC = Termostato detección de cal**
① TP, TMP = Temporizador
① TRF, TRF1 = Transformador
**TSC = Termostato seguridad cámara**
TSV = Termostato seguridad de vapor
TV = Termostato de vapor
**V1 = Electroválvula de agua de llenado**
VC = Ventilador centrifugo premezcla
**VCN = Electroválvula de agua de condensación**
**VE = Ventilador cuadro eléctrico**
VF = Variador de frecuencia

# FRANÇAIS

CODES DE COULEURS:
r = rouge
a = bleu
m = marron
g = gris
n = noir
b = blanc
vi = violet
am = jaune
na = orange
rs = rose
ve = vert
am/ve = jaune/vert

COMPOSANTS:

**BD = Veilleuse de détection de flamme**
BE =Veilleuse d'allumage
C = Condensateur moteur
C.E.C. = Controle d'allumage de chambre
C.E.V. = Controle d'allumage de vapeur
CN = Controle du niveau d'eau
① F, F1, F2, F3 = Fusible
**FI= Filtre interférences**
FM =Moteur thermique
GV1 = Electrovalve de chambre gaz (controle)
**GV2 = Electrovalve de chambre gaz (sécurité)**
GV4 = Electrovalve de vapeur gaz (controle)
**GV5 = Electrovalve de vapeur gaz (sécurité)**
**Ia = Micro cheminée ouverte**
**Ic = Micro cheminée fermée**
IG = Interruptor general
IP = Interrupteur de porte
**IR = Sélecteur régulateur de sonde noyau**
L1 = Lampe de fonctionnement
L2 = Lampe de chauffe chambre
**L4 = Lampe d'arrivée de vapeur**
**L3 = Lampe témoin de blocage de chambre**
**L5 = Lampe témoin de blocage de vapeur**
**L6 = Lampe de sureté de vapeur**
**L7 = Lampe de détection de calcaire**
**Lz = LumiÉre intérieure de chambre**
M = Moteur
**M1 = Actionnement moteur de cheminée**
R2, R1, Ra = Relais auxiliaire
**RE1 = Régulateur d'énergie**
**RSTC = Bouton de réarmement de chambre**
**RSTV = Bouton de réarmement de vapeur**
**RTS = Régulateur de sonde noyau**
T100 = Thermostat fixe 100°C
Ta = Sonnerie d'alarme
TC = Thermostat de chambre
TCN = Thermostat de condensation
**TDC = Thermostat de détection de calcaire**
① TP, TMP = Temporisateur 0-120
① TRF, TRF1 = Transformador
**TSC = Thermostat de sureté de chambre**
TSV = Thermostat de surete de vapeur
TV = Thermostat de vapeur
V1 = Electrovalve de remplissage d'eau
**VC = Ventilateur de centrifugeuse de prémélange**
VCN = Electrovalve de condensation d'eau
VE = Ventilateur tableau electrique
VF = Variador de frecuencia

# ENGLISH

COLOUR CODE
r = red
a = blue
m = brown
g = grey
n = black
b = white
vi = violet
am = yellow
na = orange
rs = pink
ve = green
am/ve = yellow-green

COMPONENTS:

BD = Flame detector spark plug
BE = Ignition spark plug
C = Motor condenser
C.E.C. = Cooking chamber ignition control
C.E.V. = Steam ignition control
CN = Water level control
① F, F1, F2, F3 = Fusible
FI= Interference filter
FM = Motor thermal switch
Cooking chamber gas solenoid valve (control)
GV2 = Cooking chamber gas solenoid valve (safety)
GV4 = Steam gas solenoid valve (control)
GV5 = Steam gas solenoid valve (safety)
Ia = Chimney open microswitch
Ic = Chimney closed microswitch
IG = Interruptor general
IP = Door switch
IR = Core probe regulator selector
L1 = On/off lamp
L2 = Cooking chamber heating lamp
L4 = Steam inlet lamp
L3 = Cooking chamber lock indicator lamp
L5 = Steam lock indicator lamp
L6 = Steam safety lamp
L7 = Lime detection lamp
Lz = Cooking chamber interior lamp
M = Motor
M1 = Chimney drive motor
R2, R1, Ra = Ausiliary relay
RE1= Energy regulator
RSTC = Cooking chamber reset button
RSTV = Steam reset button
RTS = Core probe regulator
T100 = Fixed 100°C thermostat
Ta = Warning buzzer
TC = Cooking chamber thermostat
TCN = Condensation thermostat
TDC = Lime detection thermostat
① TP, TMP = 0-120 timer
① TRF, TRF1 = Transformer
TSC = Cooking chamber safety thermostat
TSV = Steam safety thermostat
TV = Steam thermostat
V1 = Water filling solenoid valve
VC = Pre-mix centrifuge fan
VCN = Condensation water solenoid valve
VE = Switchboard fan
VF = Frequency inverter

# DEUTSCH

FARBENCODE
r = rot
a = blau
m = braun
g = grau
n = schwarz
b = weiss
vi = violett
am = gelb
na = orangers
rs = rosa
ve = grün
am/ve = gelb/grün

KOMPONENTEN:

BD = Zundkerze des Flammendetektors
BE = Zundkerze der Zundung
C = Motorkondensator
C.E.C. = Zundkontrolle Kammer
C.E.V. = Zundkontrolle Dampf
CN = Kontrolle Wasserstand
① F, F1, F2, F3 = Fusible
FI= Interferenzefilter
FM = Thermomoter
GV1 = Electroventil Gas, Kammer (Kontrolle)
GV2 = Electroventil Gas, kammer (Sicherheit)
GV4 = Electroventil Gas, Dampf (Kontrolle)
GV5 = Electroventil Gas, Dampf (Sicherheit)
Ia = Mikroschacht geoffnet
Ic = Mikroschacht geschlossen
IG = Hauptschalter
IP = Turschalter
IR = Wahlregler Kernsonde
L1 = Funktionsleuchtanzeige
L2 = Erwarmungsleuchtanzeige Kammer
L4 = Leuchtanzeige Dampfeintritt
L3 = Leuchtanzeige Blockierung Kammer
L5 = Leuchtanzeige Blockierung Dampf
L6 = Sicherheitsleuchtanzeige Dampf
L7 = Kalkanzeige
Lz = Innenbeleuchtung Kammer
M = Motor
M1 = Motorantrieb Mikroschacht
**R2, R1, Ra = Relé Auxiliar**
RE1= Hilfsrelais
RSTC = Bedienungstaste Durch, Aufladung Kammer
RSTV = Bedienungstaste Durch, Aufladung Dampf
RTS = Kernsondenregler
T100 = Thermostat auf 100°C
Ta = Meldeklingel/Lautwerk
TC = Thermostat Kammer
TCN = Kondensationsthermostat
TDC = Thermostat Kalkanzeige
① TP, TMP = Zeitschalter 0-120
① TRF, TRF1 = Transformator
TSC = Sicherheitsthermostat Kammer
TSV = Sicherheitsthermostat Dampf
TV = Dampfthermostat
V1 = Elektroventil Wasserfullung
VC = Zentrifugallufter Vormischung
VCN = Elektroventil Kondenswasser
VE = Schalttafelventilator
VF = Frequenzwandler

# ITALIANO

CODICE DEI COLORI:
r = rosso
a = azzurro
m = marrone
g = grigio
n = nero
b = bianco
vi = viola
am = giallo
na = arancione
rs = rosa
ve = verde
am/ve = giallo/verde

COMPONENTI:

BD = Candela del rilevatore di fiamma
BE = Candela d'accensione
C = Condensatore motore
C.E.C. = Controllo accensione cabina
C.E.V. = Controllo accensione vapore
CN = Controllo livello d'acqua
① F, F1, F2, F3 = Fusibile
FI= Filtro interfernze
FM = Termico Motore
GV1 = Elettrovalvola gas cabina (controllo)
GV2 = Elettrovalvola gas cabina (sicurezza)
GV4 = Elettrovalvola gas vapore (controllo)
GV5 = Elettrovalvola gas vapore (Sicurezza)
Ia = Micro camino aperto
Ic = Micro camino chiuso
IG = Interruttore generale
IP = Interruttore porta
IR = Selettore regolatore sonda nucleo
L1 = Lampadina di funzionamento
L2 = Lampadina riscaldamento cabina
L4 = Lampadina ingreso vapore
L3 = Lampadina indicatore di blocco cabina
L5 = Lampadina indicatore di blocco vapore
L6 = Lampadina di sicurezza vapore
L7 = Lampadina rilevatore di calcare
Lz = Luce interna cabina
M = Motore
M1 = Motore funzionamento camino
R2,R1,Ra = Relais ausiliario
**RE1= Regolatore d'energía**
RSTC = Pulsante di riarmo vapore
RSTV = Regolatore sonda nucleo
RTS = Regulador Sonda Nucleo
T100 = Termostato fisso 100°C
Ta = Campanello avvisatore
TC = Termostato cabina
TCN = Termostato condensazione
TDC = Termostato rilevatore di calcare
① TP, TMP = Timer 0-120
① TRF, TRF1 = Transformador
TSC = Termostato sicurezza cabina
TSV = Termostato sicurezza vaspore
TV = Termostato vapore
V1 = Elettrovalvola acqua di riempimento
VC = Ventilatore centrifuga
VCN = Elettrovalvola acqua di condensazione
VE = Ventilatore quadro elettrico
VF = Variatore di frequenza

T-113028

HC-75483 -01

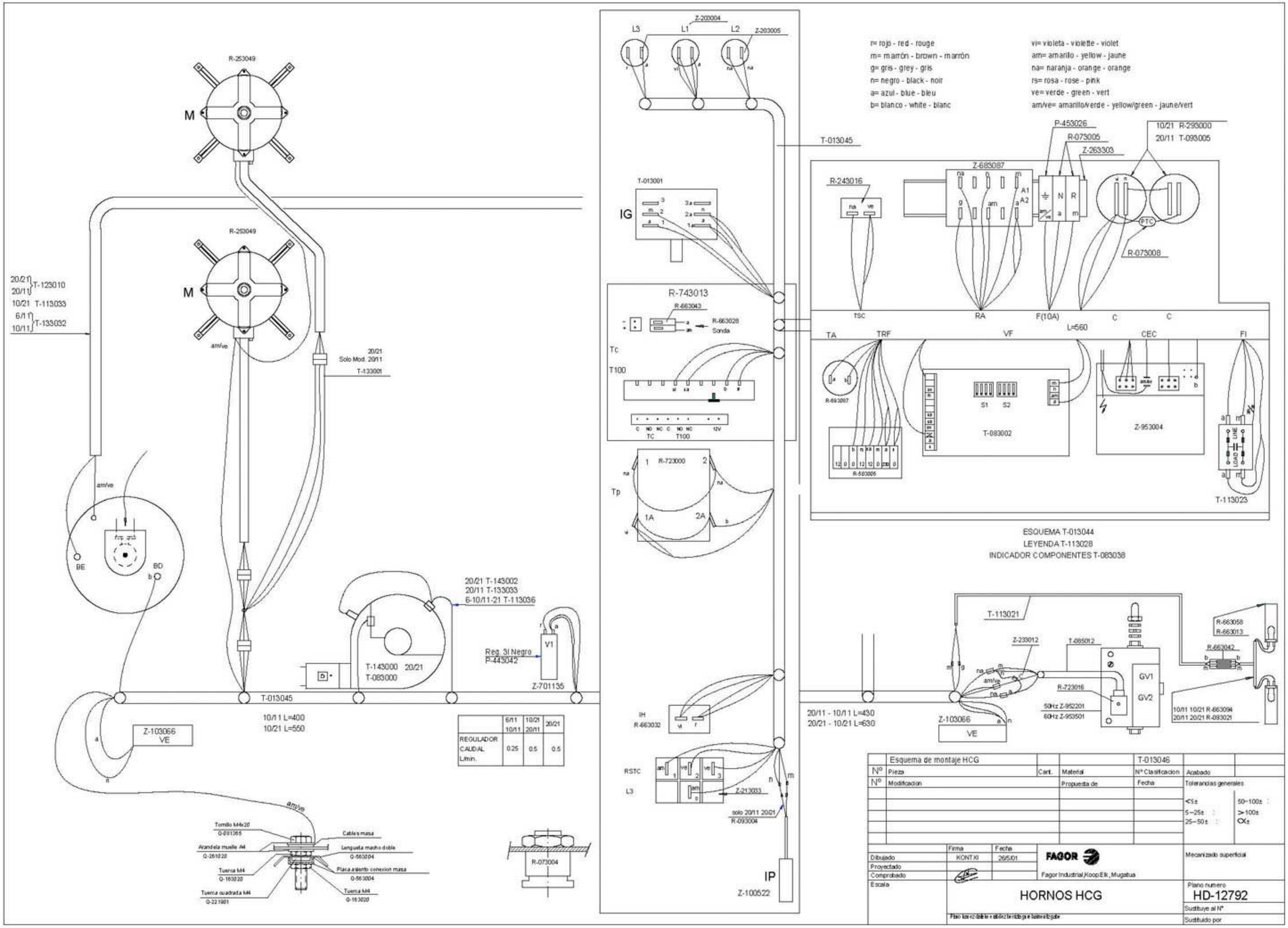


| | 6/11 10/11 | 10/21 20/11 | 20/21 |
|---|---|---|---|
| REGULADOR CAUDAL L/min. | 0.25 | 0.5 | 0.5 |

| | | | | | |
|---|---|---|---|---|---|
| | Esquema de montaje HCG | | | T-013046 | |
| Nº | Pieza | Cant. | Material | Nº Clasificacion | Acabado |
| Nº | Modificacion | | Propuesta de | Fecha | Tolerancias generales |
| | | | | | <5± 50-100± |
| | | | | | 5-25± >100± |
| | | | | | 25-50± <X± |

| | Firma | Fecha |
|---|---|---|
| Dibujado | KONTXI | 26/5/01 |
| Proyectado | | |
| Comprobado | | |
| Escala | | |

FAGOR

Fagor Industrial,Koop.Elk ,Mugatua

Mecanizado superficial

HORNOS HCG

Plano numero HD-12792

Sustituye al Nº

Sustituido por