DESPIECE TECNICO

# Lavavajillas
# Lavevaisselle
# Dishwasher
# Geschirrspüler
# Lavastoviglie

**Modelos:**

**FI-100**
**FI-100 B**
**FI-100 AR**
**FI-100 B BT UK**

***Junio 2007 June***

***Revisado Junio 2010***

**Fagor Industrial**

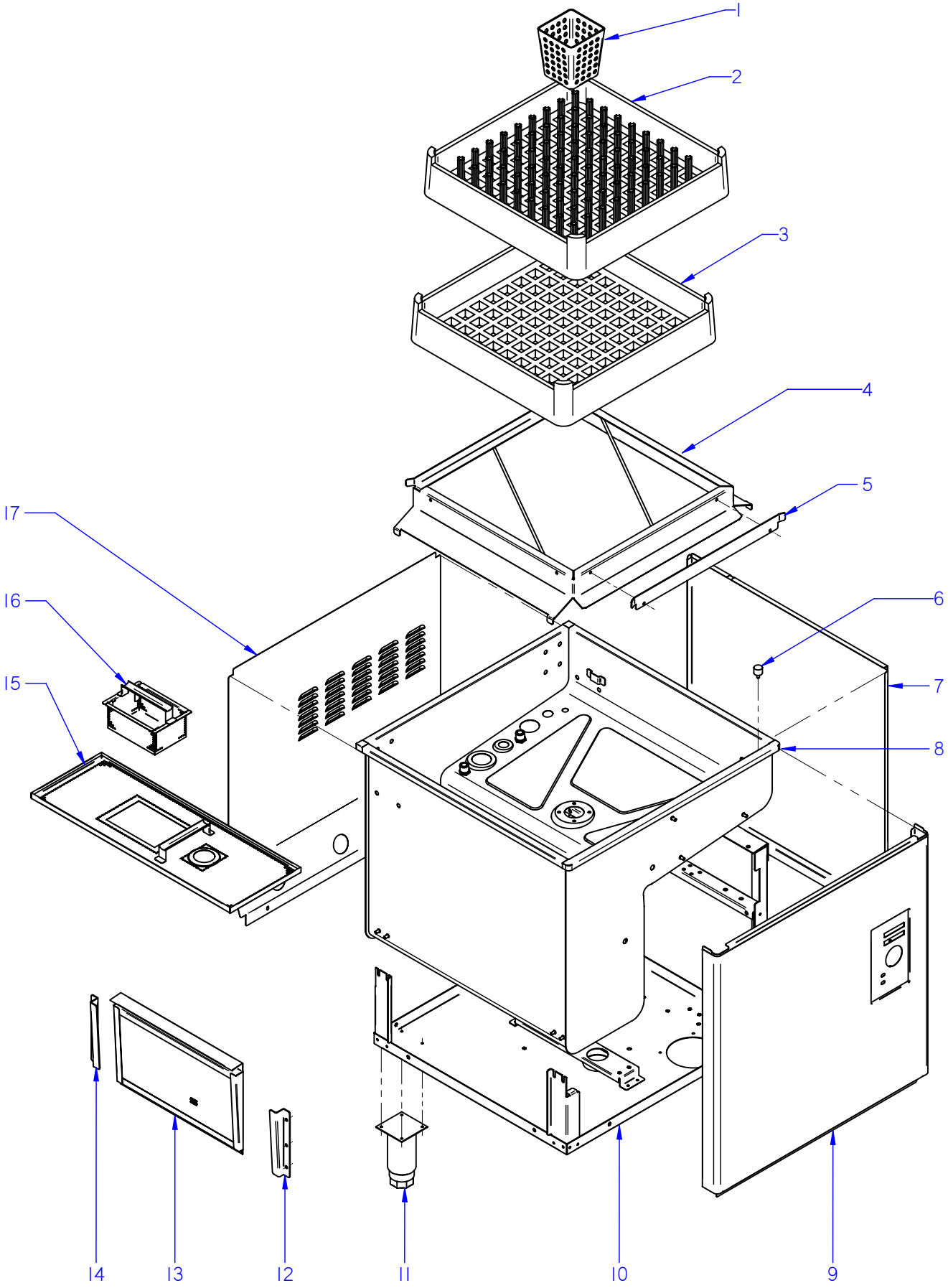


ITEM MARCADO EN COLOR = REPUESTO RECOMENDADO
COLOURED ITEM = RECOMMENDED SPARE PART

| N plano | Firma | Fecha | Aparato | Lamina | |
|---|---|---|---|---|---|
| C-1880 | | 2007-07 | MUEBLE<br>LAVAVAJILLAS FI-100 | 1 | Fagor Industrial S.Coop. FAGOR<br>Oñate |

| MOD. | LAVAVAJILLAS DE CAPOTA | ZONA | MUEBLE | PLANO | C-1880 |
|---|---|---|---|---|---|

| ITEM | CODIGO | DENOMINACION | TEXTO | FI-100 | FI-100B BT UK | FI-100 AR | | | | | NOTAS |
|---|---|---|---|---|---|---|---|---|---|---|---|
| 1 | Z655314000 | CESTILLO CUBIERTOS | CUTLERY BASKET | 8 | 8 | 8 | | | | | |
| 2 | Z655302000 | CESTILLO PLATOS CP-16-18 | PLATE BASKET CP-16-18 | 1 | _ | 1 | | | | | |
| 3 | Z655301000 | CESTILLO BASE CT-10 | BASE BASKET CT-10 | 1 | 1 | 1 | | | | | |
| 4 | Z710325000 | BASE CESTILLO COMPLETA | COMPLETE BASKET BASE | 1 | 1 | 1 | | | | | ELIMINADO 26.09.01 |
| 4 | Z710377000 | BASE CESTILLO COMPLETA | COMPLETE BASKET BASE | 1 | 1 | 1 | | | | | INTRODUCIDO 26.09.01 |
| 5 | Z710326000 | GUIA CESTILLO | BASKET GUIDE | 1 | 1 | 1 | | | | | |
| | Q152004000 | TORNILLO APLAST. M5x13 A304 | MUSHROOM HEAD BOLT M5x13 A | 2 | 2 | 2 | | | | | |
| | Q242030000 | ARANDELA ABANICO A5 A.304 | FAN WASHER A5 A.304 | 2 | 2 | 2 | | | | | |
| | Q162030000 | TUERCA EXAGONAL M5 | HEXAGONAL NUT M5 | 2 | 2 | 2 | | | | | |
| | Q308000000 | ARANDELA DUBO A.8 | DUBO A.8 WASHER | 14 | 14 | 14 | | | | | |
| 6 | Z710316000 | AMORTIGUADOR | DAMPER | 2 | 2 | 2 | | | | | |
| | Q262040000 | ARANDELA GROW. A6 A.304 | WASHER GROW. A6 A.304 | 2 | 2 | 2 | | | | | |
| | Q162040000 | TUERCA EXAGONAL M6 | HEXAGONAL NUT M6 | 2 | 2 | 2 | | | | | |
| | Q012073000 | TORNILLO EXAGONAL M12x20 | HEXAGONAL BOLT M12x20 | 1 | 1 | 1 | | | | | |
| | Q306024000 | JUNTA 18x12.2x1.5 | SEAL 18x12.2x1.5 | 1 | 1 | 1 | | | | | |
| | Q162070000 | TUERCA EXAGONAL M12 | HEXAGONAL NUT M12 | 1 | 1 | 1 | | | | | |
| 7 | Z749311000 | PANEL LATERAL DCHO | RIGHT SIDE PANEL | 1 | 1 | 1 | | | | | |
| | Q152004000 | TORNILLO APLAST. M5x13 A304 | MUSHROOM HEAD BOLT M5x13 A | 2 | 2 | 2 | | | | | |
| S/Nº | Z749312000 | PANEL LATERAL IZDO. | LEFT SIDE PANEL | 1 | 1 | 1 | | | | | |
| | Q152004000 | TORNILLO APLAST. M5x13 A304 | MUSHROOM HEAD BOLT M5x13 A | 2 | 2 | 2 | | | | | |
| 8 | Z710301000 | CUBA COMPLETA FI-100 | COMPLETE TUB FI-100 | 1 | _ | _ | | | | | ELIMINADO 20.06.08 |
| 8 | Z710375000 | CUBA COMPLETA FI-100 | COMPLETE TUB FI-100 | 1 | _ | _ | | | | | INTRODUCIDO 20.06.08 |
| 8 | Z718914000 | CUBA COMPLETA CLINIC | COMPLETE TUB CLINIC | _ | 1 | _ | | | | | ELIMINADO 20.06.08 |
| 8 | Z718956000 | CUBA COMPLETA CLINIC | COMPLETE TUB CLINIC | _ | 1 | _ | | | | | INTRODUCIDO 20.06.08 |
| 8 | Z718305000 | CUBA COMPLETA FI-100 AR | COMPLETE TUB FI-100 | _ | _ | 1 | | | | | ELIMINADO 20.06.08 |
| 8 | Z718307000 | CUBA COMPLETA FI-100 AR | COMPLETE TUB FI-100 | _ | _ | 1 | | | | | INTRODUCIDO 20.06.08 |
| | Q232040000 | ARANDELA A6 | WASHER A6 | 4 | 4 | 4 | | | | | |
| | Q302022000 | ARANDELA 16x6x1.2 A.304 | WASHER 16X6X1.2 A.304 | 4 | 4 | 4 | | | | | |
| | Q262040000 | ARANDELA GROW. A6 A.304 | WASHER GROW. A6 A.304 | 8 | 8 | 8 | | | | | |
| | Q162040000 | TUERCA EXAGONAL M6 | HEXAGONAL NUT M6 | 8 | 8 | 8 | | | | | |
| 9 | Z712927000 | PANEL FRONTAL FI-120 | FRONT PANEL FI-120 | 1 | 1 | 1 | | | | | |

| MOD. | LAVAVAJILLAS DE CAPOTA | ZONA | MUEBLE | PLANO | C-1880 |
|---|---|---|---|---|---|

| ITEM | CODIGO | DENOMINACION | TEXTO | FI-100 | FI-100B BT UK | FI-100 AR | | | | | NOTAS |
|---|---|---|---|---|---|---|---|---|---|---|---|
| 10 | Z749303000 | ARMAZON COMPLETO | COMPLETE FRAME | 1 | _ | 1 | | | | | |
| 10 | Z718921000 | ARMAZON COMPLETO CLINIC | COMPLETE FRAME CLINIC | _ | 1 | _ | | | | | |
| 11 | X260151000 | PATA REGULABLE | ADJUSTABLE LEG | 4 | 4 | 4 | | | | | |
| | Q411304000 | REMACHE AVIBULB Ø 4,8 | AVIBULB RIVET Ø4.8 | 16 | 16 | 16 | | | | | |
| 12 | Z710309000 | GUIA FILTRO ANTERIOR | FRONT FILTER GUIDE | 1 | 1 | 1 | | | | | |
| | Q232040000 | ARANDELA A6 | WASHER A6 | 2 | 2 | 2 | | | | | |
| | Q162040000 | TUERCA EXAGONAL M6 | HEXAGONAL NUT M6 | 2 | 2 | 2 | | | | | |
| 13 | Z710907000 | FILTRO COMPLETO | COMPLETE FILTER | 1 | 1 | 1 | | | | | |
| 14 | Z710310000 | GUIA FILTRO POSTERIOR | REAR FILTER GUIDE | 1 | 1 | 1 | | | | | |
| | Q232040000 | ARANDELA A6 | WASHER A6 | 2 | 2 | 2 | | | | | |
| | Q162040000 | TUERCA EXAGONAL M6 | HEXAGONAL NUT M6 | 2 | 2 | 2 | | | | | |
| 15 | Z710801000 | BANDEJA COMPLETA | COMPLETE TRAY | 1 | 1 | 1 | | | | | |
| 16 | Z710804000 | RECOGEDOR DESPERDICIOS | WASTE COLLECTION | 1 | 1 | 1 | | | | | |
| 17 | Z742905000 | PANEL POSTERIOR FI-80 | REAR PANEL FI-80 | 1 | 1 | 1 | | | | | |
| | 3713500000 | PERFIL CUBREARISTAS PLASTICO | PLASTIC EDGE COVER PROFILE | 3 | 3 | 3 | | | | | |
| | Q152004000 | TORNIL, APLASTADO M5x13 A304 | FLAT HEADED BOLT M5x13 A304 | 2 | 2 | 2 | | | | | |
| | Z712911000 | TOPE 80x80x20 | BUFFER 80x80x20 | 6 | 6 | 6 | | | | | |

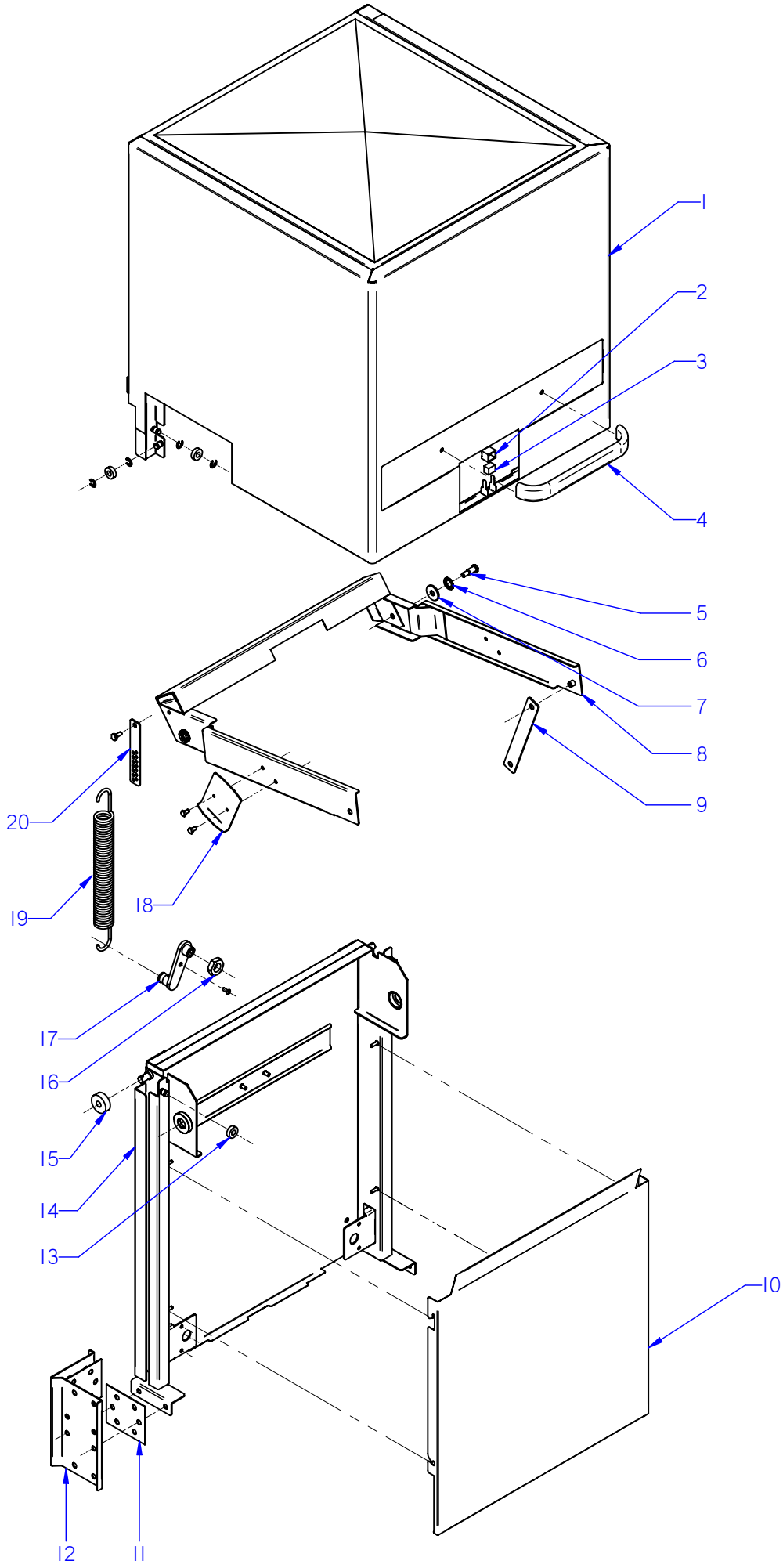


ITEM MARCADO EN COLOR = REPUESTO RECOMENDADO
COLOURED ITEM = RECOMMENDED SPARE PART

| N plano | Firma | Fecha | Aparato | CAPO | Lamina | |
|---|---|---|---|---|---|---|
| C-1881 | | 2007-07 | LAVAVAJILLAS FI-100 | | 2 | Fagor Industrial S.Coop. FAGOR Oñate |

| MOD. | LAVAVAJILLAS DE CAPOTA | ZONA | CAPO | PLANO | C-1881 |
|---|---|---|---|---|---|

| ITEM | CODIGO | DENOMINACION | TEXTO | FI-100 | FI-100B BT UK | | | | | | NOTAS |
|---|---|---|---|---|---|---|---|---|---|---|---|
| 1 | Z710580000 | CAPO COMPLETO | COMPLETE STRAIGHT HOOD | 1 | 1 | | | | | | ELIMINADO 20.04,09 |
| 1 | Z710557000 | CAPO COMPLETO | COMPLETE STRAIGHT HOOD | 1 | 1 | | | | | | INTRODUCIDO 20.04,09 |
| | Z710515000 | CASQUILLO RODANTE | REVOLVING BUSHING | 4 | 4 | | | | | | |
| | Q271006000 | ARANDELA DE SEGURIDAD 8 | SAFETY WASHER 8 | 8 | 8 | | | | | | |
| 2 | Z200507000 | PROTECTOR IMAN | MAGNET PROTECTOR | 1 | 1 | | | | | | |
| 3 | Z200506000 | IMAN | MAGNET | 1 | 1 | | | | | | |
| 4 | Z400542000 | ASA LVS. | AD HOOD HANDLE | 1 | 1 | | | | | | |
| | Q032041000 | TORNILLO ALOMADO M6x10 | CURVED SCREW M6x10 | 2 | 2 | | | | | | |
| | Q308002000 | ARANDELA DUBO A6 NYLON | WASHER DUBO A6 NYLON | 2 | 2 | | | | | | |
| 5 | Z710542000 | EJE DE GIRO | ROTARY SHAFT | 2 | 2 | | | | | | |
| 6 | Z710541000 | RODAMIENTO 6200-2RS1 | BEARING 6200-2RS1 | 2 | 2 | | | | | | |
| 7 | Q308012000 | ARANDELA 30x10x3 | WASHER 30x10x3 | 2 | 2 | | | | | | |
| 8 | Z710517000 | BALANCIN COMPLETO | COMPLETE ROCKER ARM | 1 | 1 | | | | | | |
| | Q232050000 | ARANDELA A8 | WASHER A8 | 2 | 2 | | | | | | |
| | Q262050000 | ARANDELA GROW. A8 A.304 | WASHER GROW. A8 A.304 | 2 | 2 | | | | | | |
| | Q162050000 | TUERCA EXAGONAL M8x1 INOX. | HEXAGONAL NUT M8x1 INOX. | 2 | 2 | | | | | | |
| 9 | Z710523000 | BIELA | ROD | 2 | 2 | | | | | | |
| | Q308012000 | ARANDELA 30x10x3 | WASHER 30x10x3 | 8 | 8 | | | | | | |
| | Q232040000 | ARANDELA A6 | WASHER A6 | 4 | 4 | | | | | | |
| | Q262040000 | ARANDELA GROW. A6 A.304 | WASHER GROW. A6 A.304 | 4 | 4 | | | | | | |
| | Q012041000 | TORNILLO EXAGON. M6x10 A.304 | HEXAGONAL BOLT. M6x10 A.304 | 4 | 4 | | | | | | |
| 10 | Z718932000 | CUBIERTA RESORTES | SPRING COVER | 1 | 1 | | | | | | |
| 11 | Z710547000 | JUNTA SOPORTE CAPO | HOOD SUPPORT SEAL | 4 | 4 | | | | | | |
| | Q012053000 | TORNILLO EXAGON. M8x20 A.304 | HEXAGONAL BOLT. M8x20 A.304 | 10 | 10 | | | | | | |
| | Q013153000 | TORNILLO EX M-8x20 LATON CRO. | HEX BOLT M-8x20 CHR. BRASS | 4 | 4 | | | | | | |
| | Q232050000 | ARANDELA A8 | WASHER A8 | 14 | 14 | | | | | | |
| | Q262050000 | ARANDELA GROW. A8 A.304 | WASHER GROW. A8 A.304 | 14 | 14 | | | | | | |
| | Q162050000 | TUERCA EXAG. M8x1 INOX. | HEXAG. SCREW M8x1 STAINLES | 10 | 10 | | | | | | |
| 12 | Z710539000 | SOPORTE GUIA CAPO | HOOD GUIDE SUPPORT | 2 | 2 | | | | | | |
| 13 | Z710515000 | CASQUILLO RODANTE | REVOLVING BUSHING | 2 | 2 | | | | | | |
| | Q271006000 | ARANDELA DE SEGURIDAD 8 | SAFETY WASHER 8 | 4 | 4 | | | | | | |

| MOD. | LAVAVAJILLAS DE CAPOTA | ZONA | CAPO | PLANO | C-1881 |
|---|---|---|---|---|---|

| ITEM | CODIGO | DENOMINACION | TEXTO | FI-100 | FI-100B BT UK | | | | | | NOTAS |
|---|---|---|---|---|---|---|---|---|---|---|---|
| 14 | Z710524000 | GUIA CAPO COMPLETA | COMPLETE HOOD GUIDE | 1 | 1 | | | | | | |
| | Q352024000 | PASADOR DE ALETA 4x25 | WING PIN 4x25 | 2 | 2 | | | | | | |
| 15 | Z710546000 | CASQUILLO | BUSHING | 2 | 2 | | | | | | |
| 16 | Q222016000 | TUERCA EXAGONAL M20 | HEXAGONAL BOLT M20 | 2 | 2 | | | | | | |
| 17 | Z710529000 | TENSOR MUELLE | TENSIONING SPRING | 2 | 2 | | | | | | |
| | Q152004000 | TORNILLO APLAST. M5x13 A 304 | MUSHROOM HEAD BOLT M5x13 | 2 | 2 | | | | | | |
| 18 | Z710548000 | ESCUADRA TOPE | BUFFER BRACKET | 2 | 2 | | | | | | |
| | Q012041000 | TORN.EXA. M6X10 A.304 | HEXAGONAL BOLT. M6X10 A.304 | 4 | 4 | | | | | | |
| | Q242040000 | ARANDELA ABANICO | FAN WASHER | 4 | 4 | | | | | | |
| 19 | Z710528000 | RESORTE 29230 | SPRING 29230 | 2 | 2 | | | | | | |
| 20 | Z710543000 | ENGANCHE MUELLE | SPRING HOOK | 2 | 2 | | | | | | |
| | Z710544000 | EJE ENGANCHE MUELLE | SPRING HOOK SHAFT | 2 | 2 | | | | | | |
| | Q232040000 | ARANDELA A6 | WASHER A6 | 2 | 2 | | | | | | |
| | Q222012000 | TUERCA AUTOB. M6 | SELF-LOCK NUT M6 | 2 | 2 | | | | | | |

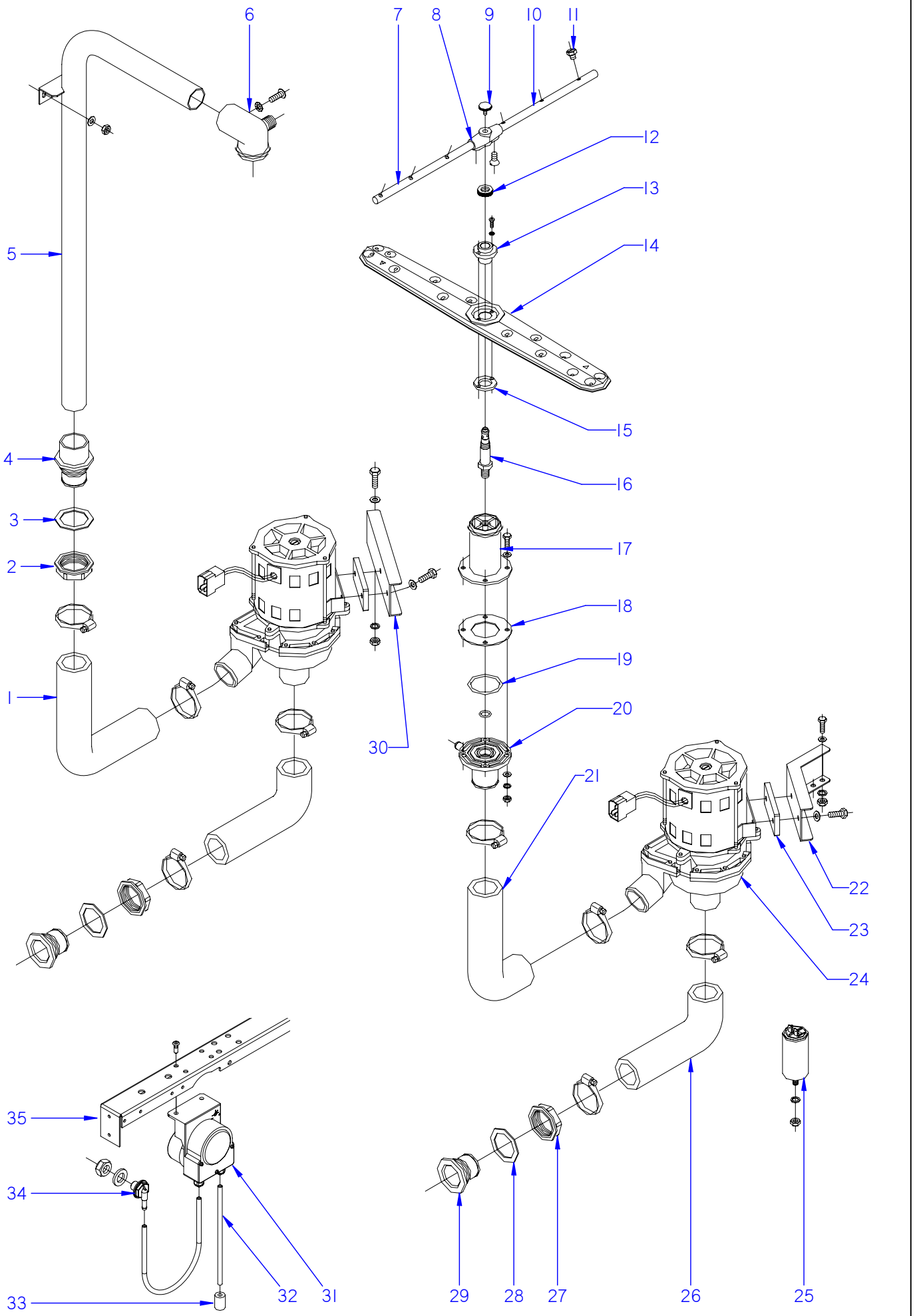


ITEM MARCADO EN COLOR = REPUESTO RECOMENDADO
COLOURED ITEM = RECOMMENDED SPARE PART

| N plano | Firma | Fecha | Aparato | | Lamina | |
|---|---|---|---|---|---|---|
| C-1882 | | 2007-07 | PARTE FUNCIONAL LAVADO<br>LAVAVAJILLAS FI-100 | | 3 | Fagor Industrial S.Coop.<br>Oñate |

| MOD. | LAVAVAJILLAS DE CAPOTA | ZONA | PARTE FUNCIONAL DE LAVADO | PLANO | C-1882 |
|---|---|---|---|---|---|

| ITEM | CODIGO | DENOMINACION | TEXTO | FI-100 | FI-100B BT UK | FI-100 A.R+DD | | | | | NOTAS |
|---|---|---|---|---|---|---|---|---|---|---|---|
| 1 | Z710906000 | CONDUCTO IMPULSION POSTER. | REAR IMPULSE PIPE | 1 | 1 | 1 | | | | | |
| | Q881307000 | ABRAZADERA 40-60 | CLAMP 40-60 | 2 | 2 | 2 | | | | | |
| 2 | Z710708000 | TUERCA PASAMUROS | WALL BUSHING NUT | 1 | 1 | 1 | | | | | |
| 3 | Q307058000 | ARANDELA 60x44x2 | WASHER 60x44x2 | 1 | 1 | 1 | | | | | |
| 4 | Z740701000 | PASAMUROS ARBOL LAVADO | WASH CAM BUSHING | 1 | 1 | 1 | | | | | |
| 5 | Z710709000 | ARBOL LAVADO COMPLETO | COMPLETE WASH CAM | 1 | 1 | 1 | | | | | |
| | Q232040000 | ARANDELA A6 | WASHER A6 | 2 | 2 | 2 | | | | | |
| | Q162040000 | TUERCA EXAGONAL M6 | HEXAGONAL NUT M6 | 2 | 2 | 2 | | | | | |
| 6 | Z710705000 | SOPORTE DISTRIBUIDOR SUPER. | UPPER DISTRIBUTION SUPPORT | 1 | 1 | 1 | | | | | |
| | Q152004000 | TORNILLO APLAST. M5x13 A.304 | MUSHROOM HEAD BOLT M5x13 | 1 | 1 | 1 | | | | | |
| | Q242030000 | ARANDELA ABANICO A5 A.304 | FAN WASHER A5 A.304 | 1 | 1 | 1 | | | | | |
| 7 | Z201902000 | RAMA ACLARADO IZQUIERDA | LEFT RINSE BRANCH | 2 | 2 | 2 | | | | | |
| 8 | Z201903000 | SOPORTE RAMA ACLARADO COM. | COM. RINSE BRANCH SUPPORT | 2 | 2 | 2 | | | | | |
| | Q042021000 | TORNILLO AVELLAN. M4x10 A304 | COUNTERSUNK BOLT M4x10 A30 | 4 | 4 | 4 | | | | | |
| 9 | Q152016000 | TORNILLO ESPECIAL M.5x0.8 | SPECIAL BOLT M.5X0.8 | 2 | 2 | 2 | | | | | |
| 10 | Z201901000 | RAMA ACLARADO DERECHA | RIGHT RINSE BRANCH | 2 | 2 | 2 | | | | | |
| 11 | Z211903000 | TOBERA ACLARADO | RINSE NOZZLE | 12 | 12 | 12 | | | | | |
| 12 | Z680738000 | TUERCA ESPECIAL | SPECIAL NUT | 2 | 2 | 2 | | | | | |
| 13 | Z710712000 | CASQUILLO DISTRIBUIDOR | DISTRIBUTOR BUSHING | 2 | 2 | 2 | | | | | |
| | Q032011000 | TORNILLO ALOMADO M3x10 | CURVED SCREW M3X10 | 4 | 4 | 4 | | | | | |
| | Q242010000 | ARANDELA ABANICO A3 A.304 | FAN WASHER A3 A.304 | 4 | 4 | 4 | | | | | |
| 14 | Z710701000 | DISTRIBUIDOR COMPLETO | COMPLETE DISTRIBUTOR | 2 | 2 | 2 | | | | | |
| 15 | Z710713000 | ARANDELA AMARRE | ANCHORAGE WASHER | 2 | 2 | 2 | | | | | |
| 16 | Z710711000 | EJE CENTRAL | CENTRAL SHAFT | 2 | 2 | 2 | | | | | |
| 17 | Z710719000 | SOPORTE DISTRIBUIDOR INFERIOR | LOWER DISTRIBUTION SUPPORT | 1 | 1 | 1 | | | | | |
| 18 | Z710714000 | JUNTA DE GOMA | RUBBER SEAL | 1 | 1 | 1 | | | | | |
| 19 | Q307057000 | JUNTA TORICA 47.22x54.28x3.53 | O-RING 47.22x54.28x3.53 | 1 | 1 | 1 | | | | | |
| | Q307050000 | JUNTA TORICA 13.94x19.18x2.6 | O-RING 13.94x19.18x2.6 | 1 | 1 | 1 | | | | | |
| | | | | | | | | | | | |
| | | | | | | | | | | | |
| | | | | | | | | | | | |

| MOD. | LAVAVAJILLAS DE CAPOTA | ZONA | PARTE FUNCIONAL DE LAVADO | PLANO | C-1882 |
|---|---|---|---|---|---|

| ITEM | CODIGO | DENOMINACION | TEXTO | FI-100 | FI-100B BT UK | FI-100 A.R+DD | | | | | NOTAS |
|---|---|---|---|---|---|---|---|---|---|---|---|
| 20 | Z710706000 | PASAMUROS | BUSHING | 1 | 1 | 1 | | | | | |
| | Q012044000 | TORNILLO EXAGONAL M6x25 | HEXAGONAL BOLT M6x25 | 4 | 4 | 4 | | | | | |
| | Q306050000 | ARANDELA 6x12x1.5 | WASHER 6x12x1.5 | 4 | 4 | 4 | | | | | |
| | Q232040000 | ARANDELA A6 | WASHER A6 | 4 | 4 | 4 | | | | | |
| | Q262040000 | ARANDELA GROW. A6 A.304 | WASHER GROW. A6 A.304 | 4 | 4 | 4 | | | | | |
| | Q162040000 | TUERCA EXAGONAL M6 | HEXAGONAL NUT M6 | 4 | 4 | 4 | | | | | |
| 21 | Z710905000 | CONDUCTO IMPULSION ANTER. | FRONT IMPULSE PIPE | 1 | 1 | 1 | | | | | |
| | Q881307000 | ABRAZADERA 40-60 | CLAMP 40-60 | 2 | 2 | 2 | | | | | |
| 22 | Z711001000 | SOPOR. MOTOBOMBA ANTERIOR | SUPPORT FRONT MOTOR-PUMP | 1 | 1 | 1 | | | | | |
| | Q012042000 | TORNILLO EXAGONAL M6x15 | HEXAGONAL BOLT M6x15 | 2 | 2 | 2 | | | | | |
| | Q232040000 | ARANDELA A6 | WASHER A6 | 2 | 2 | 2 | | | | | |
| | Q262040000 | ARANDELA GROW. A6 A.304 | WASHER GROW. A6 A.304 | 2 | 2 | 2 | | | | | |
| | Q162040000 | TUERCA EXAGONAL M6 | HEXAGONAL NUT M6 | 2 | 2 | 2 | | | | | |
| 23 | Z201003000 | BASE BOMBA LAVADO 1003016 | WASH PUMP BASE 1003016 | 2 | 2 | 2 | | | | | |
| | Q232040000 | ARANDELA A6 | WASHER A6 | 4 | 4 | 4 | | | | | |
| | Q012042000 | TORNILLO EXAGONAL M6x15 | HEXAGONAL BOLT M6x15 | 4 | 4 | 4 | | | | | |
| 24 | Z201011000 | BOMBA DE LAVADO | WASH PUMP | 2 | 2 | 2 | | | | | |
| 24 | Z203511000 | BOMBA DE LAVADO 60 HZ. | WASH PUMP 60 Hz. | 2 | 2 | 2 | | | | | |
| 25 | V321300000 | CONDENSADOR 10 M,F, | CONDENSER 10 M,F, | 2 | 2 | 2 | | | | | |
| | Q162050000 | TUERCA EXAGONAL M8x1 INOX, | HEXAGONAL NUT M8x1 INOX. | 2 | 2 | 2 | | | | | |
| 26 | Z710904000 | CONDUCTO ASPIRACION | EXTRACTOR PIPE | 2 | 2 | 2 | | | | | |
| | Q881307000 | ABRAZADERA 40-60 | CLAMP 40-60 | 4 | 4 | 4 | | | | | |
| 27 | Z710708000 | TUERCA PASAMUROS | WALL BUSHING NUT | 2 | 2 | 2 | | | | | |
| 28 | Q307058000 | ARANDELA 60x44x2 | WASHER 60x44x2 | 2 | 2 | 2 | | | | | |
| 29 | Z710903000 | PASAMUROS ASPIRACION | EXTRACTOR BUSHING | 2 | 2 | 2 | | | | | |
| 30 | Z711002000 | SOPORTE MOTOBOMBA POSTER. | REAR MOTOR PUMP SUPPORT | 1 | 1 | 1 | | | | | |
| | Q012042000 | TORNILLO EXAGONAL M6x15 | HEXAGONAL BOLT M6x15 | 2 | 2 | 2 | | | | | |
| | Q232040000 | ARANDELA A6 | WASHER A6 | 2 | 2 | 2 | | | | | |
| | Q262040000 | ARANDELA GROW. A6 A.304 | WASHER GROW. A6 A.304 | 2 | 2 | 2 | | | | | |
| | Q162040000 | TUERCA EXAGONAL M6 | HEXAGONAL NUT M6 | 2 | 2 | 2 | | | | | |
| | | | | | | | | | | | |

| MOD. | LAVAVAJILLAS DE CAPOTA | ZONA | PARTE FUNCIONAL DE LAVADO | PLANO | C-1882 |
|---|---|---|---|---|---|

| ITEM | CODIGO | DENOMINACION | TEXTO | FI-100 | FI-100B BT UK | FI-100 A.R+DD | | | | | NOTAS |
|---|---|---|---|---|---|---|---|---|---|---|---|
| 31 | Z208903000 | DOSIFIC. DGTE REGULABLE G300 | DETERGENT DISP. ADJUST. G30 | _ | 1 | 1 | | | | | ELIMINADO 01.02.08 |
| 31 | Z208915000 | DOSIFIC. DGTE ABRILLANTADOR | DETERGENT DISP. POLISHER | _ | 1 | 1 | | | | | INTRODUCIDO 01.02.08 |
| 32 | Z448614000 | CONDUCTO ASPIRACIÓN | CROCKERY POLISHER PIPE | _ | 1 | 1 | | | | | |
| 32 | Z448618000 | CONDUCTO ABRILLANTADOR | CROCKERY POLISHER PIPE | _ | 1 | 1 | | | | | INTRODUCIDO 31.07.07 |
| 33 | Z701152000 | PESO FILTRO | FILTER WEIGHT | _ | 1 | 1 | | | | | |
| 34 | Z230902000 | PASAMUROS DETERGENTE | INOX DETERGENT WALL BUSHIN | _ | 1 | 1 | | | | | ELIMINADO 17.07.09 |
| 34 | Z230905000 | PASAMUROS DETERGENTE INOX. | DETERGENT WALL BUSHING | _ | 1 | 1 | | | | | INTRODUCIDO 17.07.09 |
| | Q306024000 | JUNTA Ø18X12.5X1.5 | O-RING Ø18X12.5X1.5 | _ | 1 | 1 | | | | | |
| | Q162070000 | TUERCA EXAGONAL M12 | HEXAGONAL NUT M12 | _ | 1 | 1 | | | | | |
| 35 | --------- | TRAVESAÑO | CROSSBAR | _ | 1 | 1 | | | | | |
| S/Nº | Z448616000 | PEGATINA TOMA DETERGENTE | PEGAT. DETERGENT MAKING | _ | 1 | 1 | | | | | |
| S/Nº | Z208904000 | CABLEADO DOSIFICADOR DTGTE | DOSEFOR DETERGEN. WIRING | _ | 1 | 1 | | | | | |

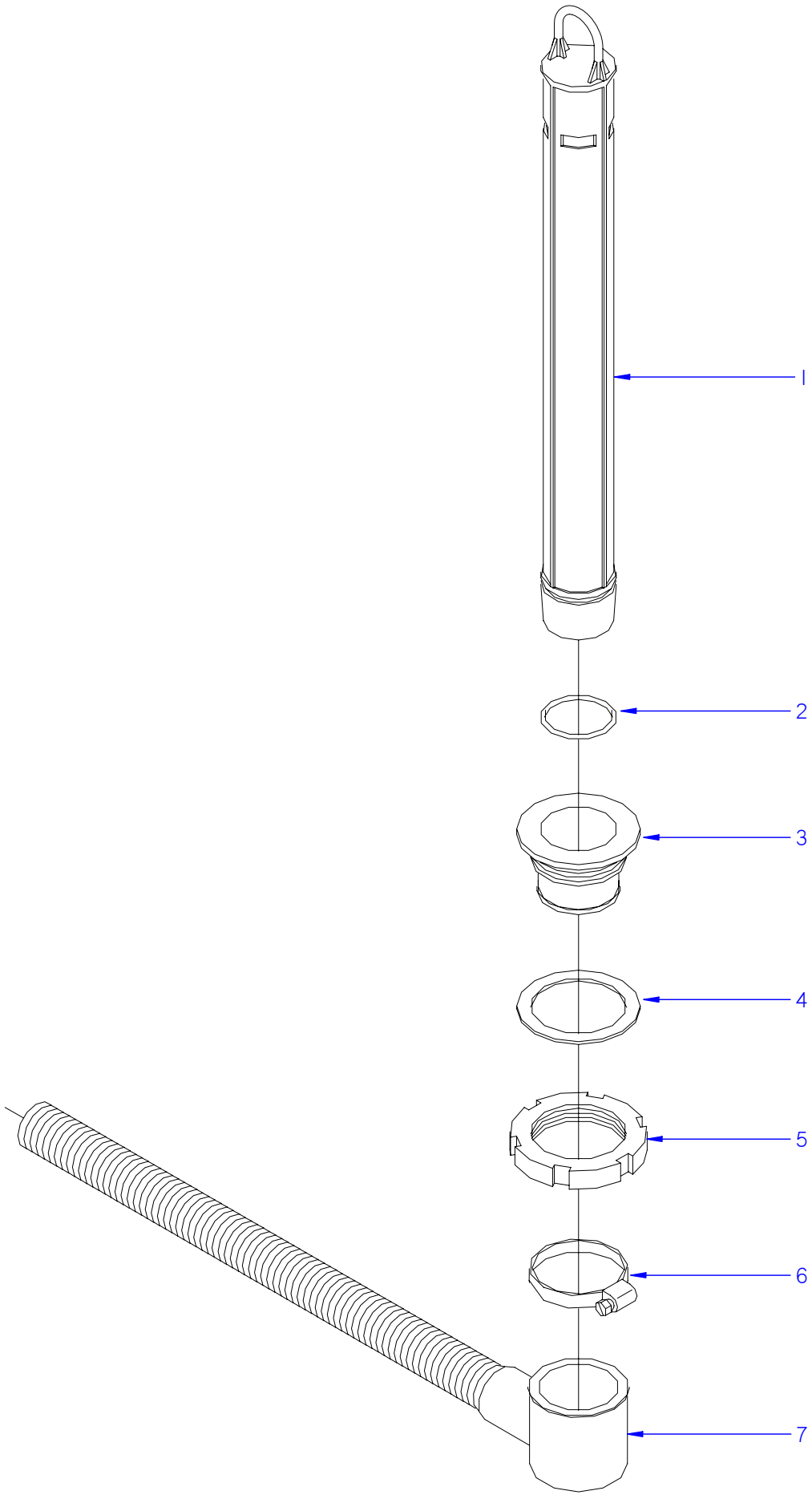


ITEM MARCADO EN COLOR = REPUESTO RECOMENDADO
COLOURED ITEM = RECOMMENDED SPARE PART

| N plano | Firma | Fecha | Aparato | Lamina | |
|---|---|---|---|---|---|
| C-1883 | | 2007-07 | PARTE FUNCIONAL DESAGUE<br>LAVAVAJILLAS FI-100 | 4 | Fagor Industrial S.Coop. FAGOR<br>Oñate |

| MOD. | LAVAVAJILLAS DE CAPOTA | ZONA | PARTE FUNCIONAL DESAGÜE | PLANO | C-1883 |
|---|---|---|---|---|---|

| ITEM | CODIGO | DENOMINACION | TEXTO | FI-100 | | | | | | | NOTAS |
|---|---|---|---|---|---|---|---|---|---|---|---|
| 1 | Z710901000 | ALIVIADERO | OVERFLOW | 1 | | | | | | | |
| 2 | Q307051000 | JUNTA TOR.36.17X41.41X2.6 | O-RING 36.17X41.41X2.6 | 1 | | | | | | | |
| 3 | Z710902000 | PASAMUROS DESAGUE | DRAINAGE BUSHING | 1 | | | | | | | |
| 4 | Q307059000 | JUNTA 72x56x2 | SEAL 72x56x2 | 1 | | | | | | | |
| 5 | Q220001000 | TUERCA RANURADA | GROOVED NUT | 1 | | | | | | | |
| 6 | Q881307000 | ABRAZADERA 40-60 | CLAMP 40-60 | 1 | | | | | | | |
| 7 | Z200910000 | MANGUERA DESAGUE | DRAINAGE HOSE | 1 | | | | | | | |

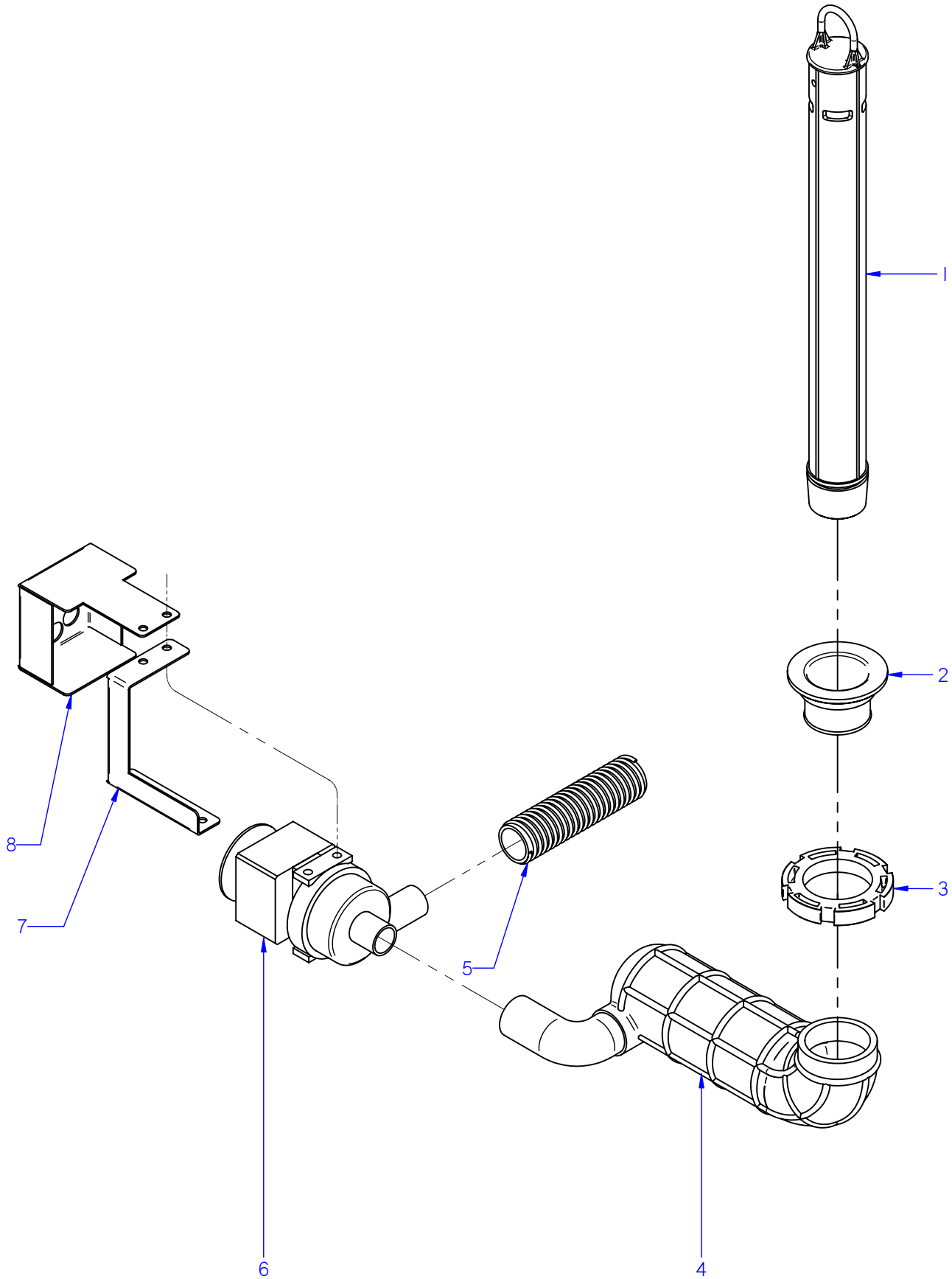


ITEM MARCADO EN COLOR = REPUESTO RECOMENDADO
COLOURED ITEM = RECOMMENDED SPARE PART

| N plano | Firma | Fecha | Aparato | PARTE FUNCIONAL DESAGUE | Lamina | |
|---|---|---|---|---|---|---|
| C-1884 | | 2007-07 | LAVAVAJIL. FI-100B BT UK; FI-100B | | 5 | Fagor Industrial S.Coop. FAGOR Onate |

| MOD. | LAVAVAJILLAS DE CAPOTA | ZONA | PARTE FUNCIONAL DESAGÜE | PLANO | C-1884 |
|---|---|---|---|---|---|

| ITEM | CODIGO | DENOMINACION | TEXTO | FI-100B BT UK | FI-100 B | | | | | | NOTAS |
|---|---|---|---|---|---|---|---|---|---|---|---|
| 1 | Z710901000 | ALIVIADERO | OVERFLOW | 1 | 1 | | | | | | |
| | Q307051000 | JUNTA TORICA 36.17x41.41x2.6 | O-RING 36.17x41.41x2.6 | 1 | 1 | | | | | | |
| 2 | Z710902000 | PASAMUROS DESAGUE | DRAINAGE BUSHING | 1 | 1 | | | | | | |
| | Q307059000 | ARANDELA 72x56x2 | WASHER 72x56x2 | 1 | 1 | | | | | | |
| 3 | Q220001000 | TUERCA RANURADA | GROOVED NUT | 1 | 1 | | | | | | |
| 4 | Z711004000 | ACUMULADOR CAPOTA | HOOD ACCUMULATOR | 1 | 1 | | | | | | |
| | Q881304000 | ABRAZADERA 20-32 | CLAMP 20-32 | 2 | 2 | | | | | | |
| 5 | Z220903000 | MANGUERA DESAGUE | DRAINAGE HOSE | 1 | 1 | | | | | | |
| | Q881307000 | ABRAZADERA 40-60 | CLAMP 40-60 | 1 | 1 | | | | | | |
| 6 | Z711007000 | BOMBA DESAGUE | DRAINAGE PUMP | 1 | 1 | | | | | | |
| | Q262040000 | ARANDELA GROW. A6 A.304 | WASHER GROW. A6 A.304 | 4 | 4 | | | | | | |
| | Q012042000 | TORNILLO EXAGONAL M6x15 | HEXAGONAL BOLT M6x15 | 4 | 4 | | | | | | |
| | Q032032000 | TORNILLO ALOMADO M5x15 | CURVED SCREW M5X15 | 2 | 2 | | | | | | |
| | Q242030000 | ARANDELA ABANICO A5 A.304 | FAN WASHER A5 A.304 | 2 | 2 | | | | | | |
| 7 | Z711005000 | SOPORTE MOTOBOMBA | MOTOR PUMP SUPPORT | 1 | 1 | | | | | | |
| 8 | Z711006000 | PROTECCION BOMBA | PUMP PROTECTION | 1 | 1 | | | | | | |

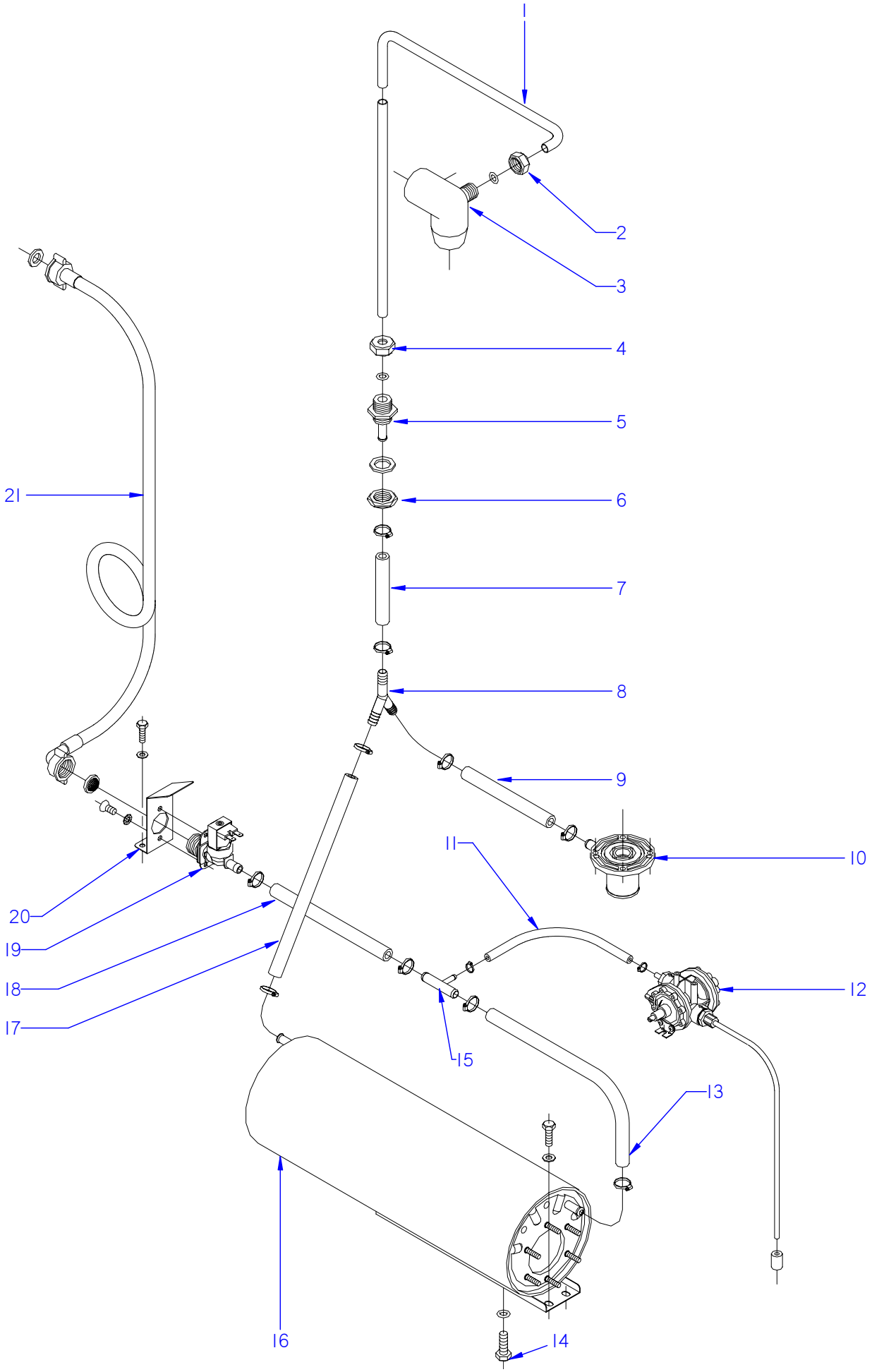


ITEM MARCADO EN COLOR = REPUESTO RECOMENDADO
COLOURED ITEM = RECOMMENDED SPARE PART

| N plano | Firma | Fecha | Aparato | Lamina | |
|---|---|---|---|---|---|
| C-1885 | | 2007-07 | PARTE FUNCIONAL ACLARADO<br>LAVAVAJILLAS FI-100 | 6 | Fagor Industrial S.Coop. FAGOR<br>Oñate |

| MOD. | LAVAVAJILLAS DE CAPOTA | ZONA | PARTE FUNCIONAL ACLARADO | PLANO | C-1885 |
|---|---|---|---|---|---|

| ITEM | CODIGO | DENOMINACION | TEXTO | FI-100 | | | | | | | NOTAS |
|---|---|---|---|---|---|---|---|---|---|---|---|
| 1 | Z711903000 | CONDUCCION ACLARADO COMP. | COMP. RINSE PIPE | 1 | | | | | | | |
| 2 | Q223107000 | TUERCA M.20x2.5 | NUT M.20X2.5 | 1 | | | | | | | |
| | Q307048000 | JUNTA TORICA Ø9.12X16.18X3.53 | O-RING Ø9.12X16.18X3.53 | 1 | | | | | | | |
| 3 | Z710705000 | SOPORTE DISTRIBUIDOR SUPER. | UPPER DISTRIBUTION SUPPORT | 1 | | | | | | | |
| | Q152004000 | TORNILLO APLAST. M5x13 A.304 | MUSHROOM HEAD BOLT M5x13 A | 1 | | | | | | | |
| | Q242030000 | ARANDELA ABANICO A5 A.304 | FAN WASHER A5 A.304 | 1 | | | | | | | |
| 4 | Q223107000 | TUERCA M.20x2.5 | NUT M.20X2.5 | 1 | | | | | | | |
| | Q307048000 | JUNTA TORICA Ø9.12X16.18X3.53 | O-RING Ø9.12X16.18X3.53 | 1 | | | | | | | |
| 5 | Z711904000 | PASAMUROS ACLARADO | RINSE BUSHING | 1 | | | | | | | |
| | Q307032000 | JUNTA Ø 32X21X3 | SEAL Ø 32X21X3 | 1 | | | | | | | |
| 6 | Q223023000 | TUERCA EXAGONAL 5-8 LATON | HEX NUT 5-8 BRASS | 1 | | | | | | | |
| 7 | 3676900000 | TUBO GOMA NEGRA Ø 17*10 | BLACK RUBBER PIPE 17*10 | 1 | | | | | | | |
| | Q881302000 | ABRAZADERA 12-20 | CLAMP 12-20 | 2 | | | | | | | |
| 8 | Z201106000 | RACORD EN Y | Y-CONNECTION | 1 | | | | | | | |
| 9 | 3676900000 | TUBO GOMA NEGRA Ø 17*10 | BLACK RUBBER PIPE 17*10 | 1 | | | | | | | |
| | Q881302000 | ABRAZADERA 12-20 | CLAMP 12-20 | 2 | | | | | | | |
| 10 | Z710706000 | PASAMUROS | BUSHING | 1 | | | | | | | |
| | Q012044000 | TORNILLO EXAGONAL M6x25 | HEXAGONAL BOLT M6x25 | 4 | | | | | | | |
| | Q306050000 | ARANDELA 6x12x1.5 | WASHER 6x12x1.5 | 4 | | | | | | | |
| | Q232040000 | ARANDELA A6 | WASHER A6 | 4 | | | | | | | |
| | Q262040000 | ARANDELA GROW. A6 A.304 | WASHER GROW. A6 A.304 | 4 | | | | | | | |
| | Q162040000 | TUERCA EXAGONAL M6 | HEXAGONAL NUT M6 | 4 | | | | | | | |
| 11 | 3704000000 | TUBO GOMA NEGRO D 10,5*5 | BLACK RUBBER PIPE Ø 10.5*5 | 1 | | | | | | | |
| | Q881308000 | ABRAZADERA 8-14L | CLAMP 8-14L | 2 | | | | | | | |
| 12 | Z651123000 | DOSIFICADOR TENSOACTIVO N-6 | SURFACE ACT. DISP. N-6 | 1 | | | | | | | ELIMINADO 03.04.09 |
| 12 | Z211109000 | DOSIFICADOR TENSOACTIVO N-6 | SURFACE ACT. DISP. N-6 | 1 | | | | | | | INTRODUCIDO 03.04.09 |
| 12 | Z651123000 | DOSIFICADOR TENSOACTIVO | | 1 | | | | | | | |
| S/Nº | Z448618000 | CONDUCTO ABRILLANTADOR | RINSE AID PIPE | 1 | | | | | | | INTRODUCIDO 03.04.09 |
| | Q232030000 | ARANDELA A5 | WASHER A5 | 2 | | | | | | | |
| | Q012031000 | TORNIL. EXAGONAL M5x10 A.304 | HEXAGONAL BOLT M5X10 A.304 | 4 | | | | | | | |
| | | | | | | | | | | | |

| MOD. | LAVAVAJILLAS DE CAPOTA | ZONA | PARTE FUNCIONAL ACLARADO | PLANO | C-1885 |
|---|---|---|---|---|---|

| ITEM | CODIGO | DENOMINACION | TEXTO | FI-100 | | | | | | | NOTAS |
|---|---|---|---|---|---|---|---|---|---|---|---|
| 13 | 3676900000 | TUBO GOMA NEGRA Ø 17*10 | BLACK RUBBER PIPE Ø 17*10 | 1 | | | | | | | |
| | Q881302000 | ABRAZADERA 12-20 | CLAMP 12-20 | 2 | | | | | | | |
| 14 | Q012063000 | TORNIL. EXAGONAL M10x20 A.304 | HEXAGONAL BOLT M10x20 A.30 | 1 | | | | | | | |
| | Q307048000 | JUNTA TORICA Ø9.12X16.18X3.53 | O-RING Ø9.12X16.18X3.53 | 1 | | | | | | | |
| 15 | Z601157000 | TOMA PRESION | PRESSURE INTAKE | 1 | | | | | | | |
| 16 | Z201710000 | CALDERIN COMPLETO | COMPLETE DRUM | 1 | | | | | | | |
| | Q012031000 | TORNIL. EXAGONAL M5x10 A.304 | HEXAGONAL BOLT M5X10 A.304 | 2 | | | | | | | |
| | Q232030000 | ARANDELA A5 | WASHER A5 | 2 | | | | | | | |
| 17 | 3676900000 | TUBO GOMA NEGRA Ø 17*10 | BLACK RUBBER PIPE 17*10 | 1 | | | | | | | |
| | Q881302000 | ABRAZADERA 12-20 | CLAMP 12-20 | 2 | | | | | | | |
| 18 | 3676900000 | TUBO GOMA NEGRA Ø 17*10 | BLACK RUBBER PIPE 17*10 | 1 | | | | | | | |
| | Q881302000 | ABRAZADERA 12-20 | CLAMP 12-20 | 2 | | | | | | | |
| 19 | Z701135000 | ELECTR. SIMP.220V COD.255.208 | SOLENOID VALVE SIMP.220V CO | 1 | | | | | | | |
| 20 | Z201101000 | ESCUADRA AMARRE ELECTROVA | SOLENOID VALVE BRACKET | 1 | | | | | | | |
| | Q152024000 | TORN. AVELLANADO M4x8 A.304 | HEXAGONAL COUNTERSUNK M4 | 2 | | | | | | | |
| | Q242020000 | ARANDELA ABANICO A4 A.304 | FAN WASHER A4 A.304 | 2 | | | | | | | |
| | Q012031000 | TORNIL. EXAGONAL M5x10 A.304 | HEXAGONAL BOLT M5X10 A.304 | 2 | | | | | | | |
| | Q232030000 | ARANDELA A5 | WASHER A5 | 2 | | | | | | | |
| 21 | Z602121000 | MANGUERA ENTRADA AGUA | WATER INTAKE HOSE | 1 | | | | | | | |
| | | | | | | | | | | | |
| | | | | | | | | | | | |
| | | | | | | | | | | | |
| | | | | | | | | | | | |
| | | | | | | | | | | | |
| | | | | | | | | | | | |
| | | | | | | | | | | | |
| | | | | | | | | | | | |
| | | | | | | | | | | | |
| | | | | | | | | | | | |
| | | | | | | | | | | | |
| | | | | | | | | | | | |

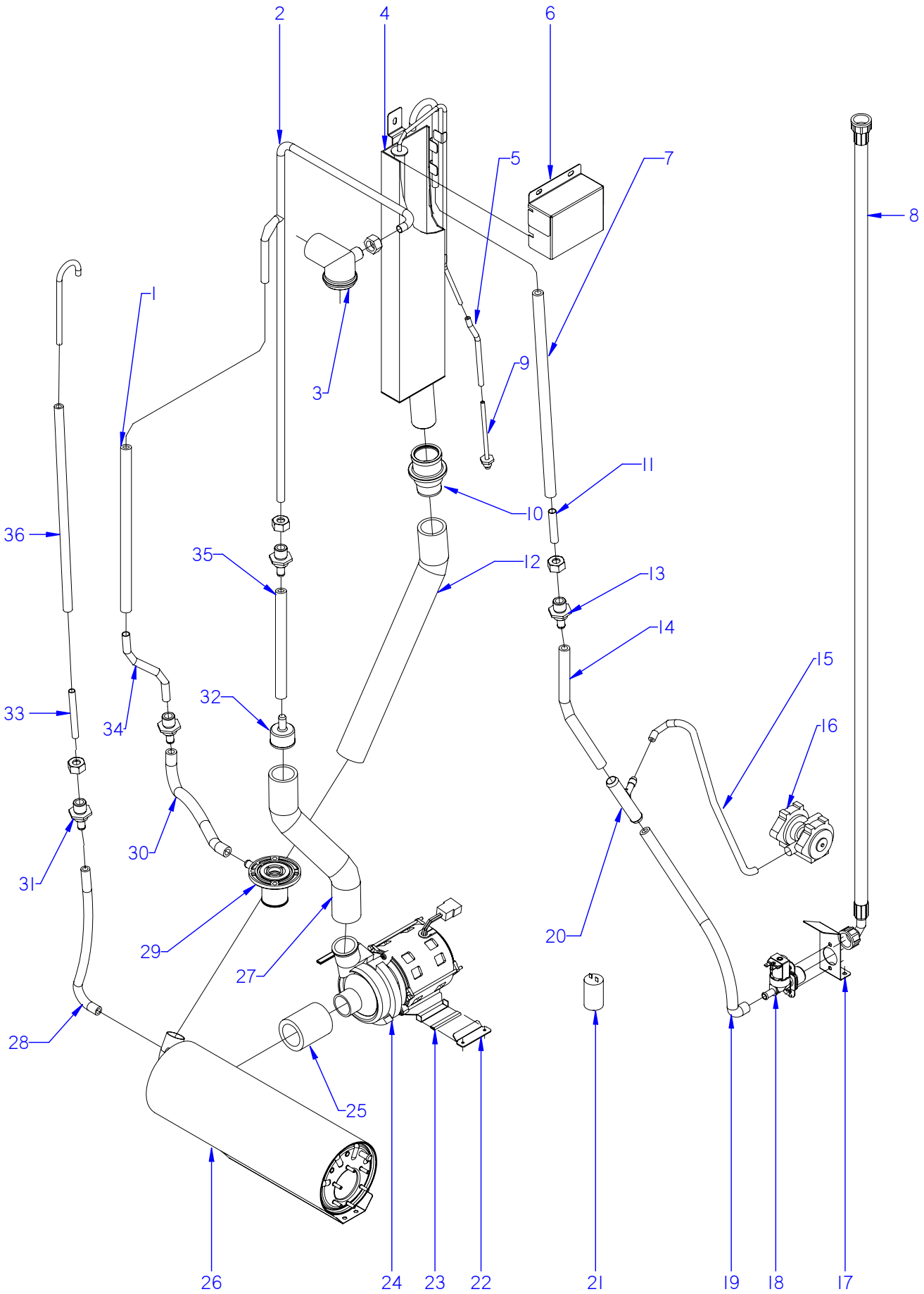


ITEM MARCADO EN COLOR = REPUESTO RECOMENDADO
COLOURED ITEM = RECOMMENDED SPARE PART

| N plano | Firma | Fecha | Aparato | PARTE FUNCIONAL DE ACLARADO | Lamina | |
|---|---|---|---|---|---|---|
| C-1886 | | 2007-07 | LAVAVAJILLAS FI-100B BT UK | | 7 | Fagor Industrial S.Coop. FAGOR Oñate |

| MOD. | LAVAVAJILLAS DE CAPOTA | | ZONA | PARTE FUNCIONAL DE ACLARADO | | | | | | | PLANO | C-1886 |
|---|---|---|---|---|---|---|---|---|---|---|---|---|
| ITEM | CODIGO | DENOMINACION | TEXTO | FI-100B BT UK | | | | | | | | NOTAS |
| 1 | 3676900000 | TUBO GOMA NEGRA Ø 17*10 | BLACK RUBBER PIPE 17*10 | 1 | | | | | | | | |
| | Q881302000 | ABRAZADERA 12-20 | CLAMP 12-20 | 2 | | | | | | | | |
| 2 | Z718911000 | RAMA DE ACLARADO CLINIC | CLINIC RINSE BRANCH | 1 | | | | | | | | |
| 3 | Z710705000 | SOPORTE DISTRIBUIDOR SUPER. | UPPER DISTRIBUTION SUPPORT | 1 | | | | | | | | |
| 4 | Z718909000 | DEPOSITO CLINIC COMPLETO | CLINIC COMPLETE TANK | 1 | | | | | | | | |
| 5 | 3702400000 | TUBO DE GOMA Ø 8*4 x140 | BLACK RUBBER PIPE Ø 8*4 | 1 | | | | | | | | |
| | P102154000 | BRIDA ELASTICA TUBO | ELASTIC PIPE FLANGE | 2 | | | | | | | | |
| 6 | Z718915000 | TAPA DEPOSITO CLINIC | TANK COVER | 1 | | | | | | | | |
| | Q262040000 | ARANDELA GROW. A6 A.304 | WASHER GROW. A6 A.304 | 3 | | | | | | | | |
| | Q162040000 | TUERCA EXAGONAL M6 | HEXAGONAL NUT M6 | 3 | | | | | | | | |
| 7 | 3676900000 | TUBO GOMA NEGRA Ø 17*10 | BLACK RUBBER PIPE 17*10 | 1 | | | | | | | | |
| | Q881302000 | ABRAZADERA 12*20 | CLAMP 12-20 | 2 | | | | | | | | |
| 8 | Z602121000 | MANGUERA ENTRADA DE AGUA | WATER INTAKE HOSE | 1 | | | | | | | | |
| 9 | Z718918000 | PASAMUROS PRES. CLINIC | PRES. CLINIC BUSHING | 1 | | | | | | | | |
| 10 | Z330751000 | PASAMUROS IMPULSION PRELAV. | IMPULSE PRELAV BUSHING | 1 | | | | | | | | ELIMINADO 31.03.09 |
| 10 | Z330790000 | PASAMUROS IMPULSION PRELAV. | IMPULSE PRELAV BUSHING | 1 | | | | | | | | INTRODUCIDO 31.03.09 |
| | Q306024000 | JUNTA 18x12.5x1.5 | SEAL 18x12.5x1.5 | 1 | | | | | | | | |
| 10 | Z330751000 | PASAMUROS IMPULSION PRELAV. | | 1 | | | | | | | | |
| | Q307065000 | JUNTA TORICA 43,01x37,77x2,62 | O-RING 43,01x37,77x2,62 | 1 | | | | | | | | |
| | Z710708000 | TUERCA PASAMUROS | BUSHING NUT | 1 | | | | | | | | |
| | Q307058000 | ARANDELA 60x44x2 | WASHER 60x44x2 | 1 | | | | | | | | |
| | Q881307000 | ABRAZADERA 40*60 | CLAMP 40*60 | 1 | | | | | | | | |
| 11 | Z718910000 | TUBO ENTRADA AGUA | WATER INTAKE PIPE | 1 | | | | | | | | |
| | Q307048000 | JUNTA TORICA 9.12x16.18x3.53 | O-RING Ø9.12X16.18X3.53 | 4 | | | | | | | | |
| 12 | Z718925000 | CONDUCTO DEPOSITO-CALDERIN | DUCT-CALDERIN DEPOSIT | 1 | | | | | | | | |
| | Q881307000 | ABRAZADERA 40*60 | CLAMP 40*60 | 2 | | | | | | | | |
| 13 | Z711904000 | PASAMUROS ACLARADO | RINSE BUSHING | 2 | | | | | | | | |
| | Q307032000 | JUNTA 32x21x3 | SEAL Ø 32X21X3 | 2 | | | | | | | | |
| | Q223023000 | TUERCA EXAGONAL 5-8 LATON | HEX NUT 5-8 BRASS | 2 | | | | | | | | |
| 14 | 3676900000 | TUBO GOMA NEGRA 17*10 | BLACK RUBBER PIPE 17*10 | 1 | | | | | | | | |
| | Q881302000 | ABRAZADERA 12*20 | CLAMP 12-20 | 4 | | | | | | | | |

| MOD. | LAVAVAJILLAS DE CAPOTA | | ZONA | PARTE FUNCIONAL DE ACLARADO | | | | | PLANO | C-1886 | |
|---|---|---|---|---|---|---|---|---|---|---|---|
| ITEM | CODIGO | DENOMINACION | TEXTO | FI-100B BT UK | | | | | | | NOTAS |
| 15 | 3704000000 | TUBO GOMA NEGRA Ø10,5*5 | BLACK RUBBER PIPE Ø10,5*5 | 1 | | | | | | | |
| | Q881308000 | ABRAZADERA 8-14L | CLAMP 8-14L | 2 | | | | | | | |
| 16 | Z651123000 | DOSIFICADOR TENSOACTIVO N-6 | SURFACE ACT. DISP. N-6 | 1 | | | | | | | ELIMINADO 03.04.09 |
| 17 | Z201101000 | ESCUADRA AMARRE ELECTROVA | SOLENOID VALVE BRACKET | 1 | | | | | | | |
| | Q152024000 | TORNILLO AVELLAN. M4x8 A304 | COUNTERSUNK NUT M4x8 A304 | 2 | | | | | | | |
| | Q242020000 | ARANDELA ABANICO A.4 A304 | FAN WASHER A4 A.304 | 2 | | | | | | | |
| | Q012031000 | TORNILLO EXAGONAL. M5x10 A304 | HEXAGONAL BOLT M5X10 A.304 | 2 | | | | | | | |
| | Q232030000 | ARANDELA A5 | WASHER A5 | 2 | | | | | | | |
| 18 | Z701135000 | E.V. SIMPLE 0V COD. 255.208 | SOLENOID VALVE SIMP. 0V COD. | 1 | | | | | | | |
| | Z841107000 | REGULAD. ENTRADA 10L 254.067 | REGULATOR 10L 254.067 | 1 | | | | | | | |
| 19 | 3676900000 | TUBO GOMA NEGRA 17*10 | BLACK RUBBER PIPE Ø 17*10 | 1 | | | | | | | |
| | Q881302000 | ABRAZADERA 12*20 | CLAMP 12-20 | 4 | | | | | | | |
| 20 | Z601157000 | TOMA PRESION | PRESSURE INTAKE | 1 | | | | | | | ELIMINADO 01.04.08 |
| 20 | Z718949000 | TE COMP. TOMA PRESION ABR | PRESSURE INTAKE TE ABR | 1 | | | | | | | INTRODUCIDO 01.04.08 |
| 21 | V817100000 | CONDENSADOR 6 M,F, | CONDENSER 6 M,F, | 1 | | | | | | | |
| | Q162050000 | TUERCA EXAGONAL M8x1 INOX, | HEXAGONAL NUT M6 | 1 | | | | | | | |
| 22 | Z718931000 | SOPORTE MOTOBOMBA CLINIC | CLINIC M-PUMP SUPPORT | 1 | | | | | | | |
| | Q152024000 | TORNILLO AVELLAN. M4x8 A304 | COUNTERSUNK NUT M4x8 A304 | 2 | | | | | | | |
| 23 | 3701700000 | PERFIL GOMA NEGRO EN U 9*4 | BLACK RUBBER PROFILE U 9*4 | 2 | | | | | | | |
| 24 | Z401001000 | BOMBA LAVADO | WASH PUMP | 1 | | | | | | | |
| 25 | Z162301000 | CONDUCTO ASPIRAC. IMPULSION | EXTRACTOR PIPE - IMPULSE | 1 | | | | | | | |
| | Q881307000 | ABRAZADERA 40*60 | CLAMP 40*60 | 2 | | | | | | | |
| 26 | Z258916000 | CALDERIN COMPLETO BBT. | COMPLETE DRUM BBT | 1 | | | | | | | |
| 27 | Z718935000 | CONDUCTO IMPULSION CLINIC | CLINIC IMPULSE PIPE | 1 | | | | | | | |
| | Q881307000 | ABRAZADERA 40*60 | CLAMP 40*60 | 2 | | | | | | | |
| 28 | 3676900000 | TUBO GOMA NEGRA 17*10 | BLACK RUBBER PIPE Ø 17*10 | 1 | | | | | | | |
| | Q881302000 | ABRAZADERA 12*20 | CLAMP 12-20 | 2 | | | | | | | |
| 29 | Z710706000 | PASAMUROS | BUSHING | 1 | | | | | | | |
| | | | | | | | | | | | |
| | | | | | | | | | | | |
| | | | | | | | | | | | |

| MOD. | LAVAVAJILLAS DE CAPOTA | ZONA | PARTE FUNCIONAL DE ACLARADO | PLANO | C-1886 |
|---|---|---|---|---|---|

| ITEM | CODIGO | DENOMINACION | TEXTO | FI-100B BT UK | | | | | | | NOTAS |
|---|---|---|---|---|---|---|---|---|---|---|---|
| 30 | 3676900000 | TUBO GOMA NEGRA 17*10 | BLACK RUBBER PIPE 17*10 | 1 | | | | | | | |
| | Q881302000 | ABRAZADERA 12*20 | CLAMP 12*20 | 2 | | | | | | | |
| 31 | Z718951000 | PASAMUROS ACLAR. CLINIC | CLINIC RINSE BUSHING | 2 | | | | | | | INTRODUCIDO 20.06.08 |
| | Z718957000 | ARANDELA Ø 30x14.25x2.5 | WASHER Ø 30x14.25x2.5 | 2 | | | | | | | INTRODUCIDO 20.06.08 |
| | Q307031000 | JUNTA TUBO 14X24X3 | SEAL 14X24X3 | 2 | | | | | | | INTRODUCIDO 20.06.08 |
| | Q221338000 | TUE.EX.AUT.M14 H.ZINCADO | ZINC AUT.M14 H. NUT | 2 | | | | | | | INTRODUCIDO 20.06.08 |
| 31 | Q223107000 | TUERCA M.20x2.5 | | 5 | | | | | | | |
| 32 | Z701104000 | REDUCCION | REDUCTION | 1 | | | | | | | |
| 33 | Z718928000 | TUBO PASAM. CALDER. CLINIC | DRUM PIPE | 1 | | | | | | | |
| | Q307048000 | JUNTA TORICA 9.12x16.18x3.53 | O-RING Ø9.12X16.18X3.53 | 1 | | | | | | | |
| 34 | Z718927000 | TUBO PAS. ACLARADO CLINIC | RINSE PIPE | 1 | | | | | | | |
| 35 | 3676900000 | TUBO GOMA NEGRA 17*10 | BLACK RUBBER PIPE 17*10 | 2 | | | | | | | |
| | Q881302000 | ABRAZADERA 12*20 | CLAMP 12*20 | 4 | | | | | | | |
| 36 | 3676900000 | TUBO GOMA NEGRA 17*10 | BLACK RUBBER PIPE 17*10 | 1 | | | | | | | |
| | Q881302000 | ABRAZADERA 12*20 | CLAMP 12*20 | 2 | | | | | | | |

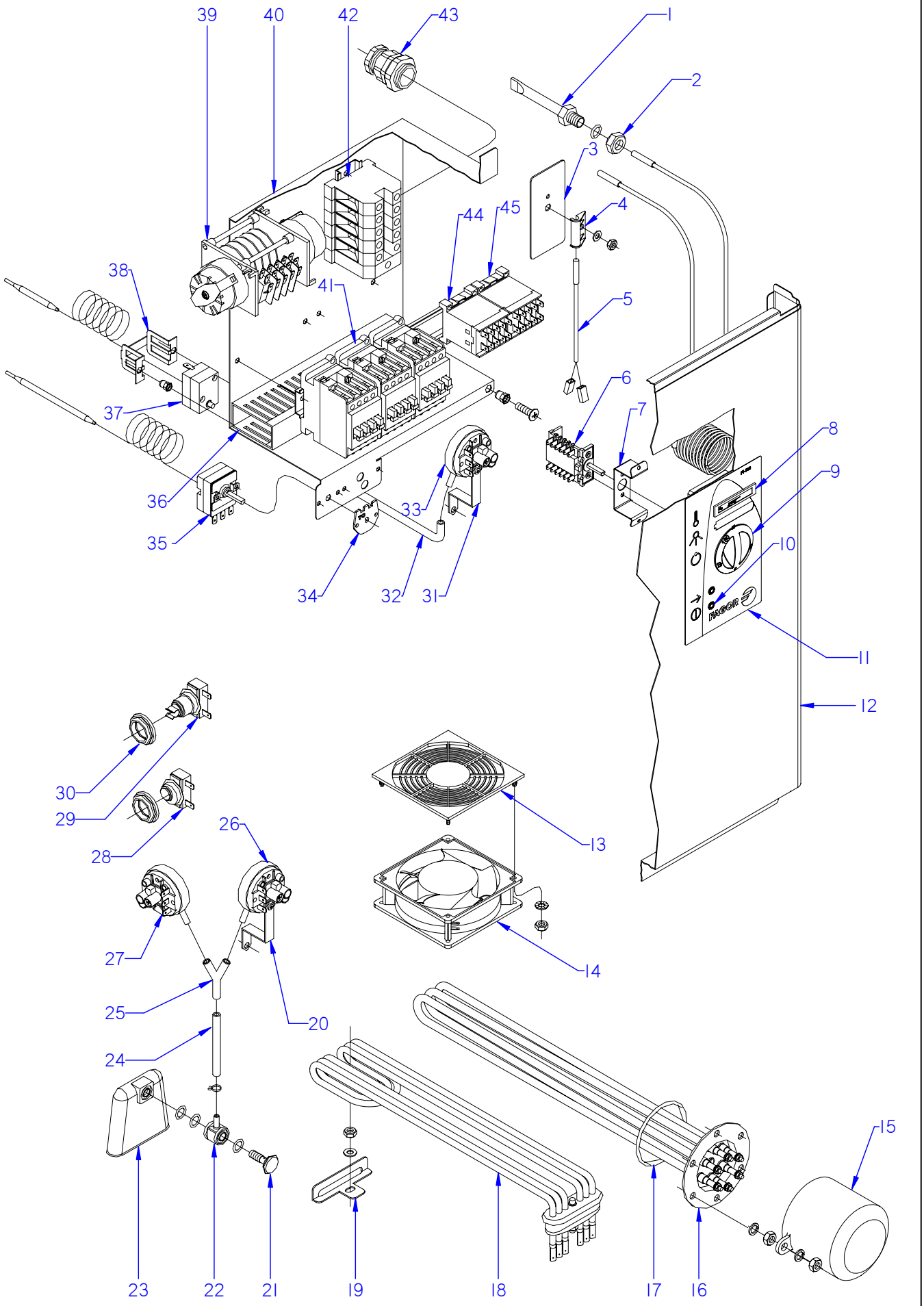


ITEM MARCADO EN COLOR = REPUESTO RECOMENDADO
COLOURED ITEM = RECOMMENDED SPARE PART

| N plano | Firma | Fecha | Aparato | PARTE FUNCIONAL ELECTRICA | Lamina | |
|---|---|---|---|---|---|---|
| C-1887 | | 2007-07 | LAVAVAJILLAS FI-100 | | 8 | Fagor Industrial S.Coop. FAGOR Oñate |

| MOD. | LAVAVAJILLAS DE CAPOTA | ZONA | PARTE FUNCIONAL ELECTRICA | PLANO | C-1887 |
|---|---|---|---|---|---|

| ITEM | CODIGO | DENOMINACION | TEXTO | FI-100 | FI-100B BT UK | FI-100 B | | | | | NOTAS |
|---|---|---|---|---|---|---|---|---|---|---|---|
| 1 | Z263002000 | VAINA INDICADOR COMPLETA | COMPLETE INDICATOR SHELL | 1 | 1 | 1 | | | | | |
| | Q307048000 | JUNTA TORICA Ø16,18xØ9,12xØ3,53 | O-RING 18x12.5x1.5 | 1 | 1 | 1 | | | | | |
| 2 | Q162070000 | TUERCA EXAGONAL M-12 | HEXAGONAL NUT M12 | 1 | 1 | 1 | | | | | |
| 3 | Z101211000 | APOYO INTERRUPTOR | SWITCH SUPPORT | 1 | 1 | 1 | | | | | |
| 4 | Z203010000 | AMARRE INTERRUPTOR MAGNET. | MAGNETIC SWITCH FASTENER | 1 | 1 | 1 | | | | | |
| | Q232040000 | ARANDELA A-6 | WASHER A-6 | 1 | 1 | 1 | | | | | |
| | Q162040000 | TUERCA EXAGONAL M-6 | HEXAGONAL NUT M-6 | 1 | 1 | 1 | | | | | |
| 5 | Z203009000 | INTERRUPTOR MAGNETICO | MAGNETIC SWITCH | 1 | 1 | 1 | | | | | |
| 6 | Z683085000 | CONMUTADOR FUNCIONES | SWITCH | 1 | _ | _ | | | | | |
| 6 | Z713097000 | CONMUTADOR | SWITCH | _ | 1 | 1 | | | | | |
| | Q152024000 | TORN. AVELLANADO M4x8 A.304 | HEXAGONAL COUNTERSUNK M4 | 2 | 2 | 2 | | | | | |
| 7 | Z712932000 | SOPOR. CONMUTADOR CAPOTA | HOOD BRACKET SWITCH | 1 | 1 | 1 | | | | | |
| | Q419005000 | REMACHE 4x8 ALMG3 / ALUMINIO | RIVET 4x8 ALMG3 / ALUMINIO | 2 | 2 | 2 | | | | | |
| 8 | Z203072000 | INDICADOR ANALOGICO | ANALOG INDICATOR | 2 | 2 | 2 | | | | | |
| 9 | Z713091000 | BOTON DE MANDO 100/120 | CONTROL BUTTON 100/120 | 1 | _ | _ | | | | | |
| 9 | Z713099000 | BOTON DE MANDO B | CONTROL BUTTON B | _ | 1 | 1 | | | | | |
| 10 | Z203079000 | PILOTO AMBAR Ø10 | | 2 | 2 | 2 | | | | | |
| 11 | Z712916000 | EMBELLECED. ADHESIVO FI-100 | ADHESIVE TRIM FI-100 | 1 | _ | _ | | | | | |
| 11 | Z712934000 | EMBELL. ADHESIVO FI-100B BT UK | ADHESIVE TRIM FI-100B BT UK | _ | 1 | _ | | | | | |
| 11 | Z712930000 | EMBELLECED. ADHESIVO FI-100B | ADHESIVE TRIM FI-100B | _ | _ | 1 | | | | | |
| 12 | Z712927000 | PANEL FRONTAL FI-120 | FRONT PANELFI-120 | 1 | 1 | 1 | | | | | |
| 13 | Z713015000 | PROTECCION VENTILADOR ABS | FAN PROTECTION | 1 | 1 | 1 | | | | | |
| | Q042022000 | TORNILLO AVELLANADO M4x15 | COUNTERSUNK BOLT M4x15 | 8 | 8 | 8 | | | | | |
| | Q162020000 | TUERCA EXAGONAL M4 | HEXAGONAL NUT M4 | 12 | 12 | 12 | | | | | |
| | Q242020000 | ARANDELA ABANICO A-4 A304 | FAN WASHER A-4 A304 | 8 | 8 | 8 | | | | | |
| 14 | Z103066000 | VENTILADOR 230V,50/60 HZ | FAN 230V,50/60 HZ | 1 | 1 | 1 | | | | | |
| 15 | Z651731000 | CAPERUZA RESISTEN. CALDERIN | DRUM RESIST. CAP | 1 | 1 | 1 | | | | | |
| | Q163140000 | TUERCA EXAGONAL M6 LATON | HEXAGONAL NUT M6 BRASS | 2 | 2 | 2 | | | | | |
| | Q012031000 | TORNIL. EXAGONAL M5x10 A.304 | HEXAGONAL BOLT M5X10 A.304 | 2 | 2 | 2 | | | | | |
| | | | | | | | | | | | |
| | | | | | | | | | | | |

| MOD. | LAVAVAJILLAS DE CAPOTA | ZONA | PARTE FUNCIONAL ELECTRICA | PLANO | C-1887 |
|---|---|---|---|---|---|

| ITEM | CODIGO | DENOMINACION | TEXTO | FI-100 | FI-100B BT UK | FI-100 B | | | | | NOTAS |
|---|---|---|---|---|---|---|---|---|---|---|---|
| 16 | Z721701000 | RESISTENCIA CALDERIN | DRUM RESISTOR | 1 | 1 | 1 | | | | | |
| | Q221305000 | TUERCA EX, AUTO. M4 ZINCADA | HEX NUT , AUTO. M4 ZINC-COAT | 6 | 6 | 6 | | | | | |
| | Q163140000 | TUERCA EXAGONAL M6 LATON | HEXAGONAL NUT M6 BRASS | 6 | 6 | 6 | | | | | |
| | Q262040000 | ARANDELA GROW. A6 A,304 | WASHER GROW. A6 A.304 | 6 | 6 | 6 | | | | | |
| 17 | Q307035000 | JUNTA TORICA AN-36 282333 | O-RING AN-36 282333 | 1 | 1 | 1 | | | | | |
| 18 | Z743601000 | RESISTENCIA TANQUE | TANK RESISTOR | 1 | 1 | 1 | | | | | |
| 19 | Z743602000 | SOPORTE RESISTENCIA TANQUE | TANK RESISTOR SUPPORT | 1 | 1 | 1 | | | | | |
| | Q232040000 | ARANDELA A,6 | WASHER A,6 | 1 | 1 | 1 | | | | | |
| | Q162040000 | TUERCA EXAGONAL M6 | HEXAGONAL NUT M6 | 1 | 1 | 1 | | | | | |
| 20 | Z602923000 | SOPORTE PRESOSTATO | PRESSURE SWITCH SUPPORT | 1 | 1 | 1 | | | | | |
| | Q082032000 | TORNILLO ALOMADO BZ-3,5x9,5 | CURVED SCREW BZ-3.5x9.5 | 1 | 1 | 1 | | | | | |
| | Q162040000 | TUERCA EXAGONAL M6 | HEXAGONAL NUT M6 | 1 | 1 | 1 | | | | | |
| | Q232040000 | ARANDELA A6 | WASHER A6 | 1 | 1 | 1 | | | | | |
| 21 | Z203013000 | TORNILLO PRESOSTATO | PRESSURE SWITCH BOLT | 1 | 1 | 1 | | | | | |
| 22 | Z203012000 | EMPALME PRESOSTATO | PRESSURE SWITCH CONNEX | 1 | 1 | 1 | | | | | |
| | Q307003000 | JUNTA TOR.16,01x10,77x2,62 | O-RING 16.01X10.77X2.62 | 3 | 3 | 3 | | | | | |
| 23 | Z203011000 | CAMARA PRESOSTATO | PRESSURE SWITCH | 1 | 1 | 1 | | | | | |
| 24 | 3702400000 | TUBO DE GOMA 8x4 D8*4 | BLACK RUBBER PIPE Ø 8*4 | 1 | 1 | 1 | | | | | |
| | P102154000 | BRIDA ELASTICA TUBO | ELASTIC PIPE FLANGE | 2 | 2 | 2 | | | | | |
| 25 | Z103077000 | RACORD EN Y | Y-CONNECTION | _ | 1 | 1 | | | | | |
| 26 | Z713002000 | PRESOSTATO SIMPLE | SIMPLE PRESSURE SWITCH | 1 | 1 | 1 | | | | | |
| 27 | Z713098000 | PRESOTATO SEGURIDAD | SECURITY PRESOTATO | _ | 1 | 1 | | | | | |
| 28 | Z718405000 | TERMOSTATO DOBLE | DOUBLE THERMOSTAT | 1 | 1 | 1 | | | | | |
| 29 | R213004000 | TERMOSTATO REARME MANUAL | MANUAL RESET THERMOSTAT | 1 | 1 | 1 | | | | | |
| 30 | N503017000 | SOPORTE TERMOSTATO 1001713 | THERMOSTAT SUPPORT 100171 | 2 | 2 | 2 | | | | | |
| 31 | Z602923000 | SOPORTE PRESOSTATO | PRESSURE SWITCH SUPPORT | _ | 1 | _ | | | | | |
| | Q152004000 | TORNILLO APLAST. M5x13 A 304 | FLAT HEADED BOLT M5x13 | _ | 1 | _ | | | | | |
| | Q082032000 | TORNILLO ALOMADO BZ-3,5x9,5 | CURVED SCREW BZ-3.5x9.5 | _ | 2 | _ | | | | | |
| | Q162030000 | TUERCA EXAGONAL M5 | HEXAGONAL NUT M6 | _ | 1 | _ | | | | | |
| | Q242030000 | ARANDELA ABANICO A-5 A304 | FAN WASHER A-5 A304 | _ | 1 | _ | | | | | |
| | | | | | | | | | | | |

| MOD. | LAVAVAJILLAS DE CAPOTA | ZONA | PARTE FUNCIONAL ELECTRICA | PLANO | C-1887 |
|---|---|---|---|---|---|

| ITEM | CODIGO | DENOMINACION | TEXTO | FI-100 | FI-100B BT UK | FI-100 B | | | | | NOTAS |
|---|---|---|---|---|---|---|---|---|---|---|---|
| 32 | 3702400000 | TUBO DE GOMA 8x4 D8*4 | BLACK RUBBER PIPE Ø 8*4 | _ | 1 | _ | | | | | |
| | P102154000 | BRIDA ELASTICA TUBO | ELASTIC PIPE FLANGE | _ | 2 | _ | | | | | |
| 33 | Z213059000 | TRIPLE PRESOTATO 40-120-150 | TRIPLE PRESOTATO 40-120-15 | _ | 1 | _ | | | | | |
| 34 | Z208438000 | CHAPA W TC 90ºC | PLATE W TC 90ºC | _ | 1 | _ | | | | | |
| 35 | Z203014000 | TERMOSTATO CALDERIN | WASH DRUM THERMOSTAT | 1 | 1 | 1 | | | | | |
| | Q152024000 | TORNILLO AVELLANADO M4x8 | COUNTERSUNK BOLT M4x8 | 2 | 2 | 2 | | | | | |
| 36 | 3715520000 | CANALETA UNEX 60,30,77 | PIPING UNEX 60.30.77 | 3 | 3 | 3 | | | | | |
| | Q419005000 | REMACHE 4x8 ALMG3 / ALUMINIO | RIVET 4X8 ALMG3 / ALUMINIUM | 4 | 4 | 4 | | | | | |
| | Q221342000 | REMACHE EXAGONAL M5 | HEXAGONAL RIVET M5 | 1 | 1 | 1 | | | | | |
| | Q232040000 | ARANDELA A6 | WASHER A6 | 2 | 2 | 2 | | | | | |
| | Q162040000 | TUERCA EXAGONAL M6 | HEXAGONAL NUT M6 | 2 | 2 | 2 | | | | | |
| | Q152004000 | TORNILL, APLASTADO M5x13 A304 | FLAT HEADED BOLT M5x13 A304 | 1 | 1 | 1 | | | | | |
| | Z713035000 | REGLETA 6 mm. | TERMINAL 6 mm. | 1 | 1 | 1 | | | | | |
| | R693010000 | REGLETA 2,5MM TEKOX1106PL | TERMINAL 2,5MM TEKOX1106PL | _ | 1 | _ | | | | | |
| 37 | Z213014000 | LIMITADOR TECASA P. | LIMITER TECASA P. | 1 | 1 | 1 | | | | | |
| 38 | Z203060000 | AMARRE LIMITADOR TECASA | LIMITER FASTENING TECASA | 1 | 1 | 1 | | | | | |
| | Q221341000 | REMACHE EXAGONAL M4 | HEXAGONAL RIVET M4 | 2 | 2 | 2 | | | | | |
| | Q152024000 | TORNILLO AVELLANADO M4x8 | COUNTERSUNK BOLT M4X8 | 2 | 2 | 2 | | | | | |
| 39 | Z713055000 | PROGRAMADOR CICLO 50HZ | PROGRAMMER 50HZ | 1 | _ | 1 | | | | | |
| 39 | Z713039000 | PROGRAMAD. CICLO 5LEVAS 60HZ | PROGRAMMER 5LEVAS 60HZ | 1 | _ | 1 | | | | | |
| 39 | Z718937000 | PROGRAMADOR 50HZ 6 LEVAS | PROGRAMMER 50HZ 6 LEVAS | _ | 1 | _ | | | | | |
| | Q042022000 | TORNILLO AVELLANADO M4x15 | COUNTERSUNK BOLT M4X15 | 2 | 2 | 2 | | | | | |
| | Q221341000 | REMACHE EXAGONAL M4 | HEXAGONAL RIVET M4 | 2 | 2 | 2 | | | | | |
| 40 | Z713037000 | CAJA CUADRO ELECTRICO | SWITCHBOARD BOX | 1 | 1 | 1 | | | | | |
| 41 | Z203050000 | CONTAC. SIRIUS 3R 230V.50-60 | CONT. SIRIUS 3RT10 16-2AP02 | 3 | 3 | 3 | | | | | |
| 42 | Z683069000 | BORNA 16 | TERMINAL 16 | 3 | 3 | 3 | | | | | |
| | Z683097000 | BORNA PASO WDU16 10204,8 | STEP TERMINAL WDU16 10204.8 | 1 | 1 | 1 | | | | | |
| | Z683070000 | BORNA A TIERRA WEIDMULLER | TERMINAL TO EARTH WEIDMULL | 1 | 1 | 1 | | | | | |
| | Z683068000 | SEÑALIZ.DEK-6WEIDMULLER | SIGNS DEK-6WEIDMULLER | 1 | 1 | 1 | | | | | |
| | Z683096000 | TOPE FINAL WEW35 10590.0 | FINAL STOP WEW35 10590.0 | 1 | 1 | 1 | | | | | |
| | | | | | | | | | | | |

| MOD. | LAVAVAJILLAS DE CAPOTA | ZONA | PARTE FUNCIONAL ELECTRICA | PLANO | C-1887 |
|---|---|---|---|---|---|

| ITEM | CODIGO | DENOMINACION | TEXTO | FI-100 | FI-100B BT UK | FI-100 B | | | | | NOTAS |
|---|---|---|---|---|---|---|---|---|---|---|---|
| 43 | R023013000 | PRENSA ESTOPAS | STUFFING BOX | 1 | 1 | 1 | | | | | |
| 44 | Z683087000 | CONTACTOR 3TF20 01-3AL2 230 | CONTACTOR 3TF20 01-3AL2 230 | 1 | 1 | 1 | | | | | |
| 45 | Z213007000 | CONTACTOR 230 V. 50-60 HZ | CONTACTOR 230 V. 50-60 HZ | 1 | 1 | 1 | | | | | |

| MOD. | LAVAVAJILLAS DE CAPOTA | ZONA | VARIOS | PLANO | |
|---|---|---|---|---|---|

| ITEM | CODIGO | DENOMINACION | TEXTO | FI-100 | FI-100B BT UK | FI-100 B | | | | | |
|---|---|---|---|---|---|---|---|---|---|---|---|
| | Z716132000 | FOLLETO DE INSTRUCCIONES | INSTRUCTION LEAFLET | 1 | _ | 1 | | | | | |
| | Z718936000 | FOLLETO DE INSTRUCCIONES | INSTRUCTION LEAFLET | _ | 1 | _ | | | | | ELIMINADO 30.09.08 |
| | Z716132000 | FOLLETO DE INSTRUCCIONES | INSTRUCTION LEAFLET | _ | 1 | _ | | | | | INTRODUCIDO 30.09.08 |
| | Z713032000 | ESQUEMA TEORICO FI-100 | INSTRU. LEAFLET FI-100 | 1 | _ | _ | | | | | PLANO HC-17386 |
| | Z718939000 | ESQUEMA TEORICO 120 CLINIC | INSTRU. LEAFLET 120 CLINIC | _ | 1 | _ | | | | | PLANO HC-17804 |
| | Z713096000 | ESQUEMA TEORICO FI-100 B | INSTRU. LEAFLET FI-100 B | _ | _ | 1 | | | | | PLANO HC-17463 |
| | Z723006000 | PLANO DE MONTAJE FI-100 | ASSEMBLY PLAN FI-100 | 1 | _ | _ | | | | | PLANO HC-18054 |
| | Z718940000 | PLANO DE MONTAJE 120 CLINIC | ASSEMBLY PLAN 120 CLINIC | _ | 1 | _ | | | | | PLANO HC-17805 |
| | Z713095000 | PLANO DE MONTAJE FI-100 B | ASSEMBLY PLAN FI-100 B | _ | _ | 1 | | | | | PLANO HC-17465 |
| | | | | | | | | | | | |
| | Z723004000 | CABLEADO CALDERIN FI-120 | DRUM FI-120 WIRING | 1 | 1 | 1 | | | | | |
| | Z718938000 | CABLEADO CLINIC LINE | CLINIC LINE WIRING | _ | 1 | _ | | | | | |
| | Z723005000 | CABLEADO BOMBA DESAGUE | DRAINAGE PUMP WIRING | _ | _ | 1 | | | | | |
| | Z208917000 | CABLEADO DD-DA G650 | WIRING DD-DA G650 | _ | 1 | _ | | | | | INTRODUCIDO 03.04.09 |
| | Z283022000 | CABLE TIERRA M.BOMBA | M. LAND PUMP WIRING | _ | 1 | _ | | | | | INTRODUCIDO 14.01.08 |
| | Z718950000 | CABLEADO CLINIC LINE AXILIAR | AXILLARY LINE CLINIC WIRING | _ | 1 | _ | | | | | INTRODUCIDO 23.05.08 |
| | Z723003000 | INSTALAC. ELECTRICA BASE 120 | ELEC. INSTALATION BASE 120 | 1 | 1 | 1 | | | | | |
| | Z713036000 | LEYENDA CAPOTA | HOOD LEGEND | 1 | 1 | 1 | | | | | PLANO HC-17400 |
| | | | | | | | | | | | |
| | | | | | | | | | | | |
| | | | | | | | | | | | |
| | | | | | | | | | | | |
| | | | | | | | | | | | |
| | | | | | | | | | | | |
| | | | | | | | | | | | |
| | | | | | | | | | | | |
| | | | | | | | | | | | |
| | | | | | | | | | | | |
| | | | | | | | | | | | |
| | | | | | | | | | | | |

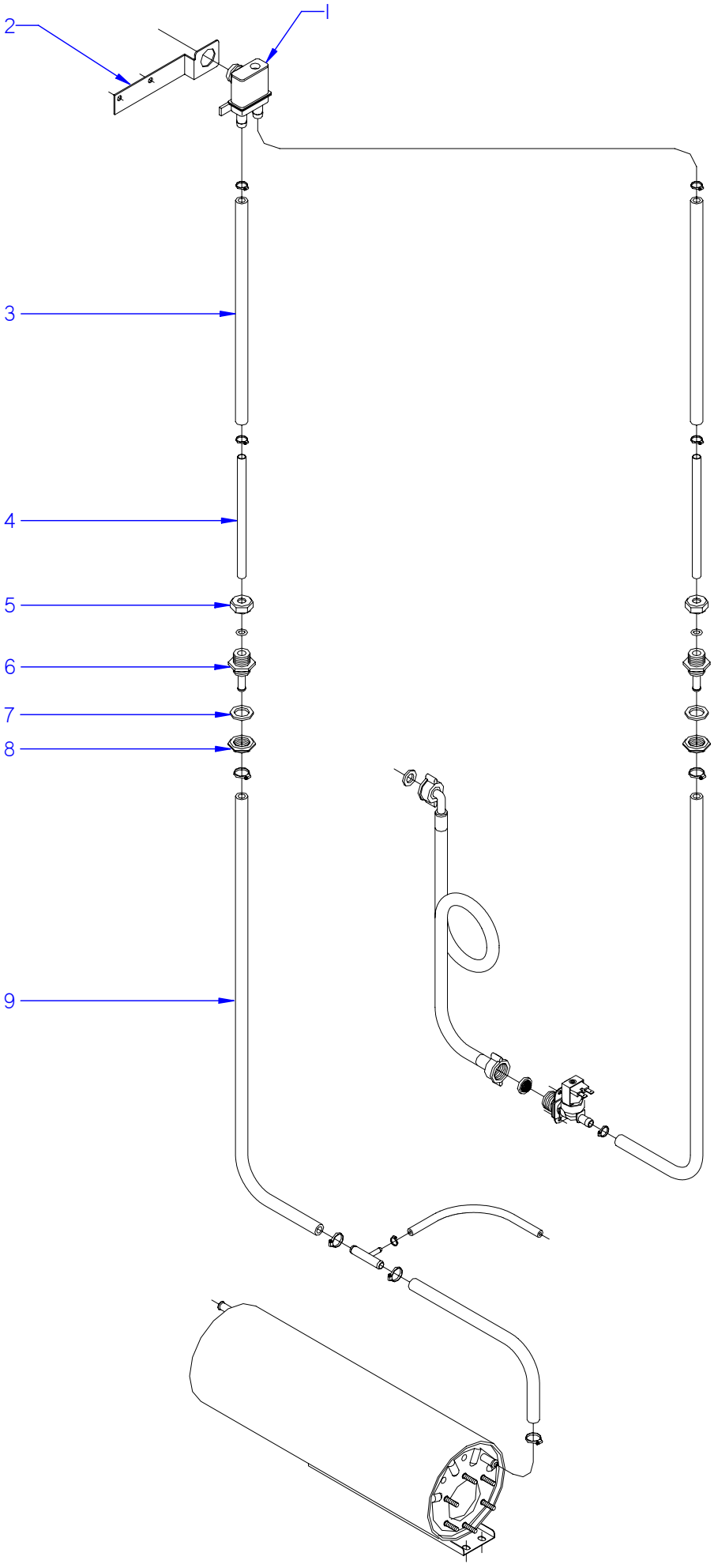


ITEM MARCADO EN COLOR = REPUESTO RECOMENDADO
COLOURED ITEM = RECOMMENDED SPARE PART

| N plano | Firma | Fecha | Aparato | | Lamina | |
|---|---|---|---|---|---|---|
| C-1888 | | 2007-07 | VALVULA ANTIRRETORNO<br>LAVAVAJILLAS FI-100 A.R. | | 9 | Fagor Industrial S.Coop.<br>Oñate |

| MOD. | LAVAVAJILLAS DE CAPOTA | ZONA | VALVULA ANTIRRETORNO | C-1888 |
|---|---|---|---|---|

| ITEM | CODIGO | DENOMINACION | TEXTO | FI-100 A.R. | | | | | | | |
|---|---|---|---|---|---|---|---|---|---|---|---|
| 1 | Z231106000 | VALVULA ANTIRRETORNO | CHECK VALVE | 1 | | | | | | | |
| 2 | Z711113000 | SOPORTE VALVULA A.R. | VALVE SUPPORT | 1 | | | | | | | |
| 3 | 3676900000 | TUBO GOMA NEGRA D 17*10 | BLACK RUBBER PIPE 17*10 | 2 | | | | | | | |
| | Q881302000 | ABRAZADERA 12-20 | CLAMP 12*20 | 4 | | | | | | | |
| 4 | Z711114000 | TUBO EMPALME | SPLICE PIPE | 2 | | | | | | | |
| 5 | Q223107000 | TUERCA M.20x2.5 | NUT M.20x2.5 | 2 | | | | | | | |
| | Q307048000 | JUNTA TORICA 9.12X16.18X3.53 | O-RING 9.12X16.18X3.53 | 2 | | | | | | | |
| 6 | Z711904000 | PASAMUROS ACLARADO | RINSE BUSHING | 2 | | | | | | | |
| 7 | Q307032000 | JUNTA 32X21X3 | SEAL Ø 32X21X3 | 2 | | | | | | | |
| 8 | Q223023000 | TUERCA EXAGONAL 5-8 LATON | HEX NUT 5-8 BRASS | 2 | | | | | | | |
| 9 | 3676900000 | TUBO GOMA NEGRA 17*10 | BLACK RUBBER PIPE 17*10 | 2 | | | | | | | |
| | Q881302000 | ABRAZADERA 12-20 | CLAMP 12*20 | 2 | | | | | | | |

| MOD. | LAVAVAJILLAS DE CAPOTA | ZONA | PIEZAS ESPECIFICAS PARA SAN-SON | PLANO | |
|---|---|---|---|---|---|

| ITEM | CODIGO | DENOMINACION | TEXTO | SS-100 | | | | | | | NOTAS |
|---|---|---|---|---|---|---|---|---|---|---|---|
| | Z200512000 | ASA PUERTA | | 1 | | | | | | | |
| | Z747002000 | ADHESIVO CAPO | | 1 | | | | | | | |
| | Z203511000 | BOMBA DE LAVADO 60 HZ. | | 2 | | | | | | | |
| | Z742904000 | PANEL FRONTAL FI-80 | | 1 | | | | | | | |
| | Z717001000 | EMBELLEC. ADHESIVO SAN-SON | | 1 | | | | | | | |
| | R693056000 | PILOTO AMBAR 41227000A4 | | 2 | | | | | | | |
| | Z663062000 | BOTON DE MANDO | | 1 | | | | | | | |
| | Z602906000 | CASQUILLO | | 2 | | | | | | | |
| | Q041324000 | T.AVELLANADO M4X25 H.ZINCADO | | 2 | | | | | | | |

| MOD. | LAVAVAJILLAS DE CAPOTA | ZONA | PIEZAS ESPECIFICAS PARA CULION | PLANO | |
|---|---|---|---|---|---|

| ITEM | CODIGO | DENOMINACION | TEXTO | VDS-120 | | | | | | | NOTAS |
|---|---|---|---|---|---|---|---|---|---|---|---|
| | Z718002000 | CUBA COM. EDESA LC-1000-1200 | | 1 | | | | | | | |
| | Z748009000 | CAPO COMPLETO EDESA | | 1 | | | | | | | |
| | Z200550000 | ASA PUERTA COMPLETA | | 1 | | | | | | | |
| | Z714502000 | ADHESIVO CAPO CULION | | 1 | | | | | | | |
| | Z711004000 | ACUMULADOR CAPOTA 1503541 | | 1 | | | | | | | |
| | Z220903000 | MANGUERA DESAGÜE | | 1 | | | | | | | |
| | Z711005000 | SOPORTE MOTOBOMBA | | 1 | | | | | | | |
| | Z711006000 | PROTECCION BOMBA | | 1 | | | | | | | |
| | Z711007000 | BOMBA DESAGUE | | 1 | | | | | | | |
| | Z748012000 | PANEL FRONTAL EDESA COMPL. | | 1 | | | | | | | |
| | Z714501000 | EMBELLECEDOR ADHES. VDS 120 | | 1 | | | | | | | |
| | R663056000 | BUPIPONS AUTOADHESIVO | | 4 | | | | | | | |
| | Z218011000 | PRG. GICAR C.TECLADO | | 1 | | | | | | | |
| | Z218013000 | CABLEADO GICAR | | 1 | | | | | | | |
| | P623017000 | INTERRUPTOR GENERAL C.I. | | 1 | | | | | | | |
| | R663036000 | FIJACION CIRCUITO | | 7 | | | | | | | |
| | Z218017000 | SOPORTE PILOTOS COMPLETO | | 1 | | | | | | | |
| | R693056000 | PILOTO AMBAR 41227000A4 | | 1 | | | | | | | |
| | Z218012000 | PRG. GICAR C.RELES | | 1 | | | | | | | |
| | T133007000 | DISTANCIADOR M3 | | 4 | | | | | | | |
| | Z718005000 | SOPORTE COMPONENTES COMP. | | 1 | | | | | | | |
| | T302829000 | DISTANCIADOR COMPONENTES | | 3 | | | | | | | |
| | Z268003000 | TERMOMETRO GICAR | | 1 | | | | | | | |
| | Z268004000 | SONDAS TEMPERATURA GICAR | | 2 | | | | | | | |
| | Z748008000 | SOPORTE BULBO TERMOSTATO | | 1 | | | | | | | |
| | Z718004000 | AMARRE SONDA | | 1 | | | | | | | |
| | Z713098000 | PRESOSTATO SEGURIDAD | | 1 | | | | | | | |
| | Z103077000 | RACORD EN Y | | 1 | | | | | | | |
| | P443060000 | TAPON | | 1 | | | | | | | |
| | Z203014000 | TERMOSTATO CALDERIN | | 1 | | | | | | | |
| | Z748027000 | REGU. TERMOS. TANQUE 60 ºC | | 1 | | | | | | | |

| MOD. | LAVAVAJILLAS DE CAPOTA | ZONA | PIEZAS ESPECIFICAS PARA CULION | PLANO | |
|---|---|---|---|---|---|

| ITEM | CODIGO | DENOMINACION | TEXTO | VDS-120 | | | | | | | NOTAS |
|---|---|---|---|---|---|---|---|---|---|---|---|
| | Z728004000 | CABLEA. CONECTOR SONDAS LC | | 1 | | | | | | | |
| | Z748021000 | INSTALACION ELEC. L.CAP. EDESA | | 1 | | | | | | | |
| | Z714504000 | CABLE. BOMBA DESAGUE EDESA | | 1 | | | | | | | |
| | Z714503000 | ESQUEMA TEORICO VDS 120B | | 1 | | | | | | | PLANO HC-18059 |
| | Z728003000 | PLANO MONTAJE LC1200, LC1000 | | 1 | | | | | | | PLANO HC-17982 |
| | Z468023000 | DISTANCIADOR INTERRUP. C.I. | | 1 | | | | | | | |
| | Z714505000 | FOLLETO DE INSTRUCCIONES | | 1 | | | | | | | |

# FI - 100 , FI - 120 , FI - 120 T , KM - 120 , MLC - 120

(4)

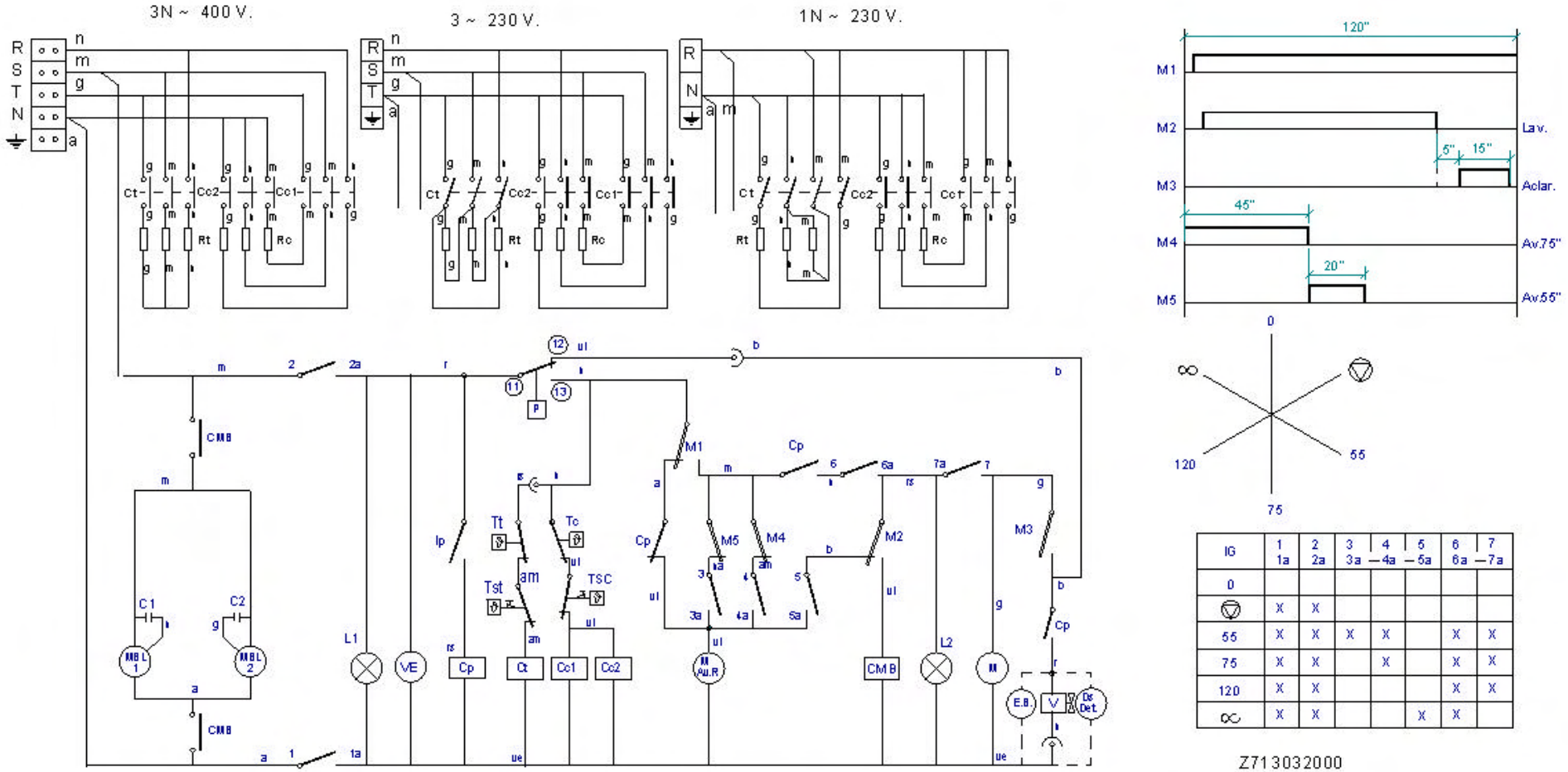








| IG | 1 1a | 2 2a | 3 3a | 4 — 4a | 5 — 5a | 6 6a | 7 — 7a |
|---|---|---|---|---|---|---|---|
| 0 | | | | | | | |
| ▽ | X | X | | | | | |
| 55 | X | X | X | X | | X | X |
| 75 | X | X | | X | | X | X |
| 120 | X | X | | | | X | X |
| ∞ | X | X | | | X | X | |

Z713032000

| | Esquema teorico adhesivo | | | Z-713032 | |
|---|---|---|---|---|---|
| Zk./Nº | Pieza | Cant. | Materiala/Material | Klas. zk./Nº Clas. | Galvazal akabera/Tratamiento |
| Zk./Nº | Aldaketa/Modificaciones | | Nork proposatua/Propuesta de | Data/Fecha | Perdoloorokorrak Tolerancias generales |
| 1 | Introducir cable negro | | M. Mallo | 14-5-2002 | |
| 2 | Cambiar de negro a rojo en Tt | | M. Mallo | 03-01-2003 | < 5 ± / 50 ÷ 100 ± |
| 3 | Cambiar de posicion Cp | | M. Mallo | 26-02-2007 | 5 ÷ 25 ± / > 100± |
| 4 | MOVIL FRIT modelos tarjetas | | m gangoiti | 2007-04-18 | 25 ÷ 50 ± / ∠ ± |
| - | - | | - | - | |

| | Sinadura/Firma | Data/Fecha |
|---|---|---|
| Marrazkia/Dibujado | S. N.- | 12-11-2001 |
| Proiektatua/Proyectado | - | - |
| Egiaztatua/Comprobado | | - |
| Eskala/Escala | | |

FAGOR

Fagor Industrial,Koop.Elk., Mugatta

Galvazal perdola
Mecanizado superficial
—

# LAVAVAJILLAS

Plano Zk./Plano Nº
**HC-17386** - 04

- Zk. ord. dt
- Zk. galtk ord.

Planoko ezin daiteke erabili, ezbeharrizkoa, gure baimenik gabe.

# FI 120 CLINIC LINE, FI 100B BT

3N ~ 380/415V. 3 ~ 230V. 1N ~ 240V.

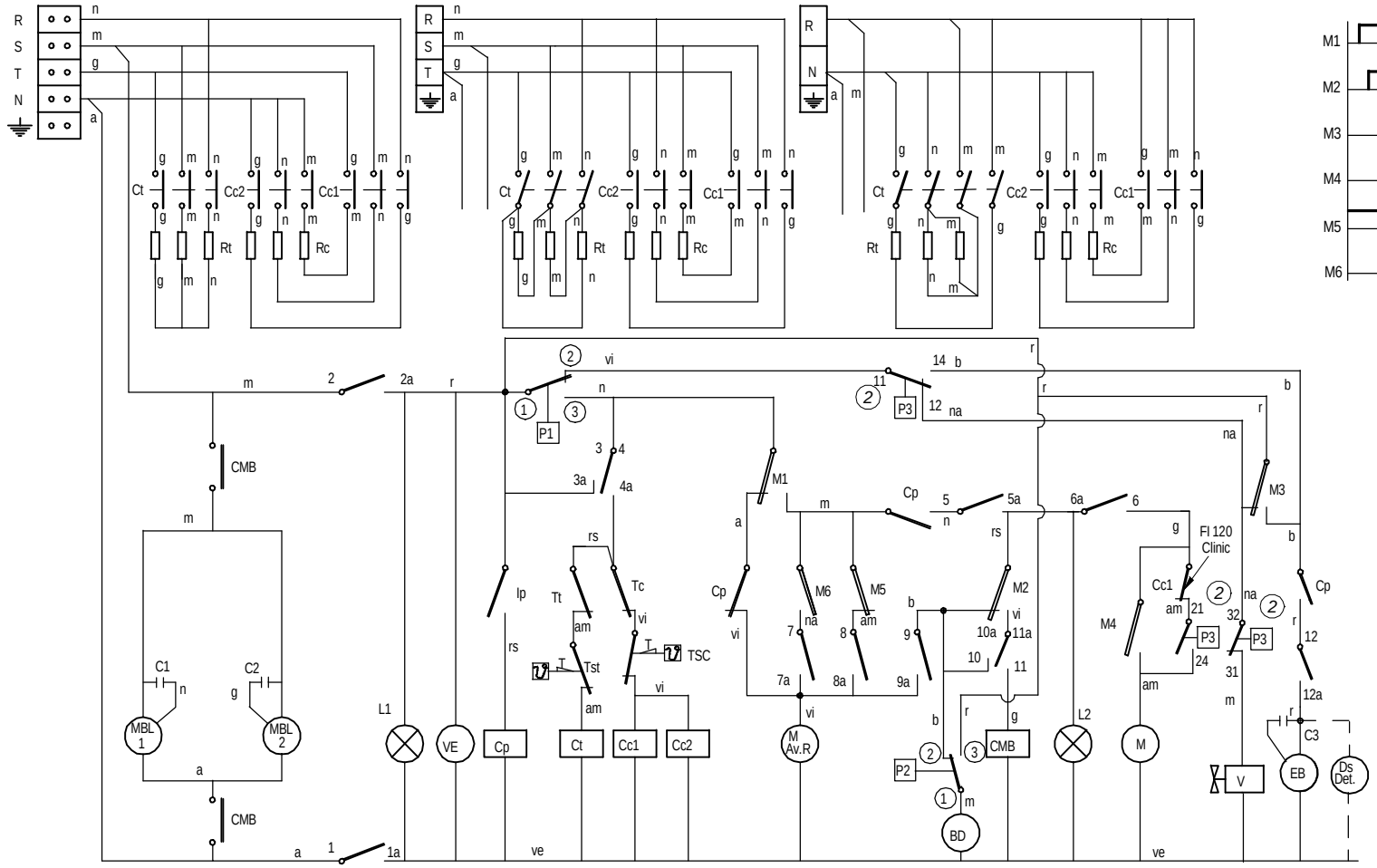


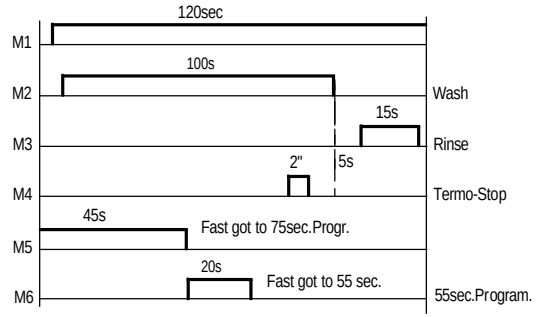


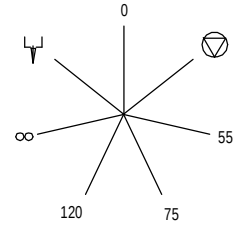


| IG | 1 1a | 2 2a | 3 3a | 4 4a | 5 5a | 6 6a | 7 7a | 8 8a | 9 9a | 10 10a | 11 11a | 12 12a |
|---|---|---|---|---|---|---|---|---|---|---|---|---|
| 0 | | | | | | | | | | | | |
| ▽ | X | X | | X | | | | | | | X | X |
| 55 | X | X | | X | X | X | X | X | | | X | X |
| 75 | X | X | | X | X | X | | X | | | X | X |
| 120 | X | X | | X | X | X | | | | | X | X |
| ∞ | X | X | | X | X | | | | X | | X | X |
| ⊔ | X | X | X | | X | X | | | | X | | |

Z718939000

| | ESQUEMA TEORICO 120 Clinic Line, 100B BT | | | Z718939000 | |
|---|---|---|---|---|---|
| Zk./Nº | Pieza | Cant. | Materiala/Material | Klas. zk/Nº Clas. | Gainazal akabera/Tratamiento |
| Zk./Nº | Aldaketa/Modificaciones | | Nork proposatua/Propuesta de | Data/Fecha | Perdoi orokorrak Tolerancias generales |
| | | | | | < 5 ± / 50 ÷ 100 ± |
| 1 | Introducir FI 100B BT | | Eneritz | 22-01-2007 | 5 ÷ 25 ± / >100± |
| 2 | Se sustituyen P3, P4 y P5-por el triple presostato P3 | | MALBES | 22-06-2007 | 25 ÷ 50 ± / α ± |
| - | - | | - | - | |
| - | - | | - | - | |

| | Sinadura/Firma | Data/Fecha |
|---|---|---|
| Marraztua/Dibujado | M.Maillo | 22-05-2005 |
| Proiektatua/Proyectado | M.Maillo | 22-05-2005 |
| Egiaztatua/Comprobado | ENERITZ | 22-05-2005 |

FAGOR

Fagor Industrial,Koop.Elk, Mugatua

Gainazal perdoia Mecanizado superficial: —

Eskala/Escala

**LAVAVAJILLAS**

Plano Zk./Plano Nº: HC-17804 -02

Zk. ord. du: -

Zk.gaitik ord.: -

Plano hau ezin daiteke erabili, ez berriztatu, gure baimenik gabe.

# FI - 120 B, FI - 100 B

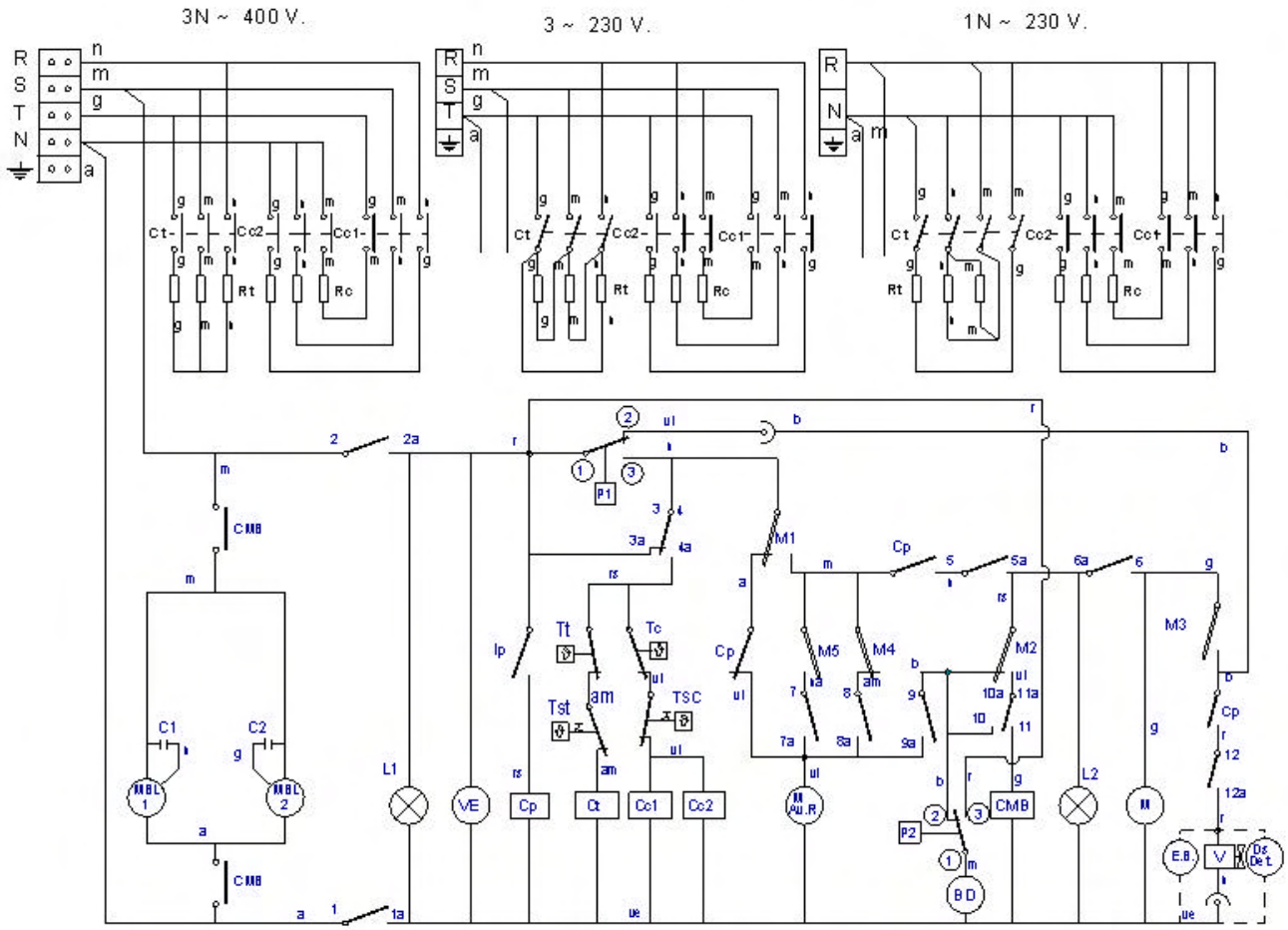


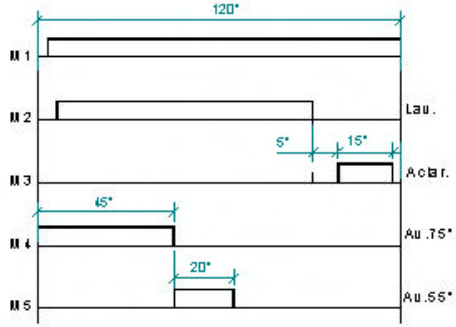


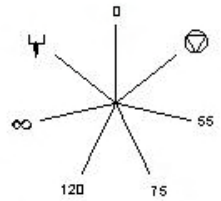


| I | 1 1a | 2 2a | 3 3a | 4 4a | 5 5a | 6 6a | 7 7a | 8 8a | 9 9a | 10 10a | 11 11a | 12 12a |
|---|---|---|---|---|---|---|---|---|---|---|---|---|
| 0 | | | | | | | | | | | | |
| ⊽ | X | X | | X | | | | | | | X | X |
| 55 | X | X | | X | X | X | X | X | | | X | X |
| 75 | X | X | | X | X | X | | X | | | X | X |
| 120 | X | X | | X | X | X | | | | | X | X |
| ∞ | X | X | | X | X | | | | X | | X | X |
| ⊔ | X | X | X | | X | X | | | | X | | |

Z713096000

| | ESQUEMA TEORICO ADHESIVO | | | Z713096000 | |
|---|---|---|---|---|---|
| Zk./Nº | Pieza | Cant. | Materiala/Material | Klas. zk/Nº Clas. | Gainazal akabera/Tratamiento |
| Zk./Nº | Aldaketa/Modificaciones | | Nork proposatua/Propuesta de | Data/Fecha | Perdolorokorrak Tolerancias generales |
| 01 | Cambiar de negro a rosa en Tt | | M. Mallio | 03-01-2003 | |
| 2 | Cambiar de posicion Cp | | M. Mallio | 26-02-2007 | < 5 ± / 50 ÷ 100 ± |
| - | - | | - | - | 5 ÷ 25 ± / > 100± |
| - | - | | - | - | 25 ÷ 50 ± / α ± |
| - | - | | - | - | |

| | Sinadura/Firma | Data/Fecha |
|---|---|---|
| Marraztua/Dibujado | unarbaiza | 28-05-2002 |
| Proiektatua/Proyectado | unarbaiza | 28-05-2002 |
| Egiaztatua/Comprobado | [signature] | 12-06-2002 |

FAGOR

Fagor Industrial,Koop.Elk, Mugatua

Gainazal perdola Mecanizado superficial

—

Eskala/Escala

**LAVAVAJILLAS**

Plano Zk./Plano Nº **HC-17463**-02

- Zk. ord. du
- Zk.gaitik ord.

Plano hau ezin daiteke erabili, ez berriztatu, gure baimenik gabe.

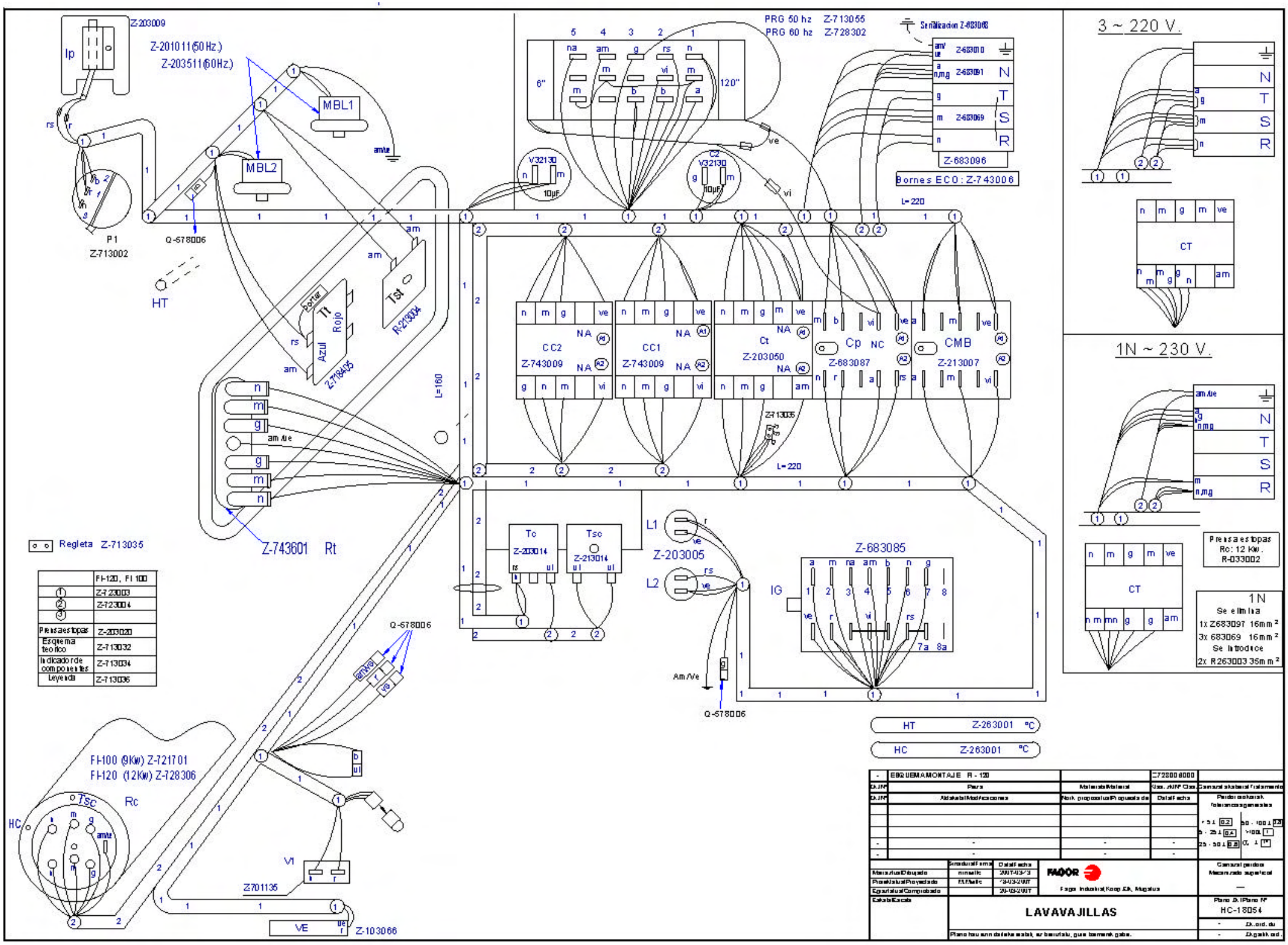


| | FI-120, FI 100 |
|---|---|
| ① | Z-723003 |
| ② | Z-723004 |
| ③ | |
| Prensaestopas | Z-203020 |
| Esquema teorico | Z-713032 |
| Indicador de componentes | Z-713034 |
| Leyenda | Z-713036 |

| | | | | |
|---|---|---|---|---|
| - | ESQUEMA MONTAJE R - 120 | | | Z72800 8000 |
| Ok./Nº | Para | Material/Material | Kod. /Nº Cód. | Comunal aldakoal/Aislamiento |
| Ok./Nº | Aldaketak/Modificaciones | Nork. proposatua/Propuesta de | Data/Fecha | Pardoi zaharrak/Relevancia generales |
| | | | | ≤ 5 ± 0.2 / 5 - 25 ± 0.4 / 25 - 50 ± 0.8 / 50 - 100 ± 0.8 / >100 ± 1 / 0 ± TM |
| - | - | - | - | |
| - | - | - | - | |

| | | | |
|---|---|---|---|
| Marraztua/Dibujado | Sinatua/Firma | Data/Fecha | FAGOR |
| Proiektatua/Proyectado | mmelle | 28/03/2007 | |
| Egiaztatua/Comprobado | | 28/03/2007 | Fagor Industrial (Koop.Elk, Mugatua |

Estalki/Escala

**LAVAVAJILLAS**

Plano honi buruzko datuak eskatuz gero, eskuratu ahal izango dira.

Comunal pardoa/Material auxiliar

Plano Ok./Plano Nº HC-18054

- Ok. ord. du
- Ok. gaitik ord.

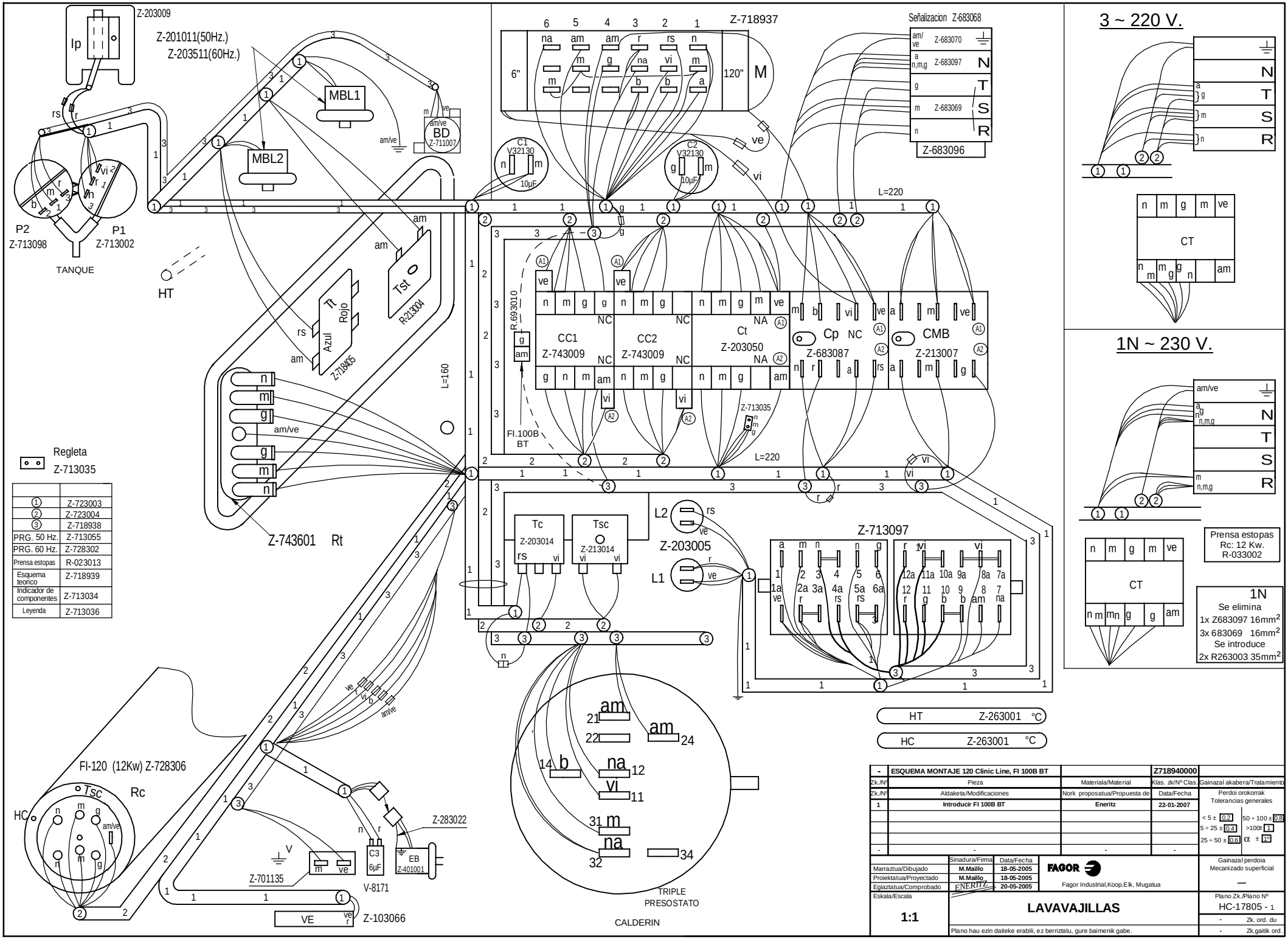


| | |
|---|---|
| ① | Z-723003 |
| ② | Z-723004 |
| ③ | Z-718938 |
| PRG. 50 Hz. | Z-713055 |
| PRG. 60 Hz. | Z-728302 |
| Prensa estopas | R-023013 |
| Esquema teorico | Z-718939 |
| Indicador de componentes | Z-713034 |
| Leyenda | Z-713036 |

| | | | | | |
|---|---|---|---|---|---|
| - | ESQUEMA MONTAJE 120 Clinic Line, FI 100B BT | | Z718940000 | | |
| Zk./Nº | Pieza | Materiala/Material | Klas. zk/Nº Clas. | Gainazal akabera/Tratamiento | |
| Zk./Nº | Aldaketa/Modificaciones | Nork proposatua/Propuesta de | Data/Fecha | Perdoi orokorrak Tolerancias generales | |
| 1 | Introducir FI 100B BT | Eneritz | 22-01-2007 | | |
| | | | | < 5 ± 0.2 | 50 ÷ 100 ± 0.8 |
| | | | | 5 ÷ 25 ± 0.4 | >100± 1 |
| | | | | 25 ÷ 50 ± 0.6 | α ± 1º |
| - | - | - | - | | |

| | | | | |
|---|---|---|---|---|
| | Sinadura/Firma | Data/Fecha | FAGOR | Gainazal perdoia Mecanizado superficial |
| Marraztua/Dibujado | M.Maillo | 18-05-2005 | Fagor Industrial,Koop.Elk, Mugatua | — |
| Proiektatua/Proyectado | M.Maillo | 18-05-2005 | | |
| Egiaztatua/Comprobado | | 20-05-2005 | ENERITZ | |
| Eskala/Escala | 1:1 | LAVAVAJILLAS | | Plano Zk./Plano Nº HC-17805 - 1 |
| | | Plano hau ezin daiteke erabili, ez berriztatu, gure baimenik gabe. | | - Zk. ord. du |
| | | | | - Zk.gaitik ord. |

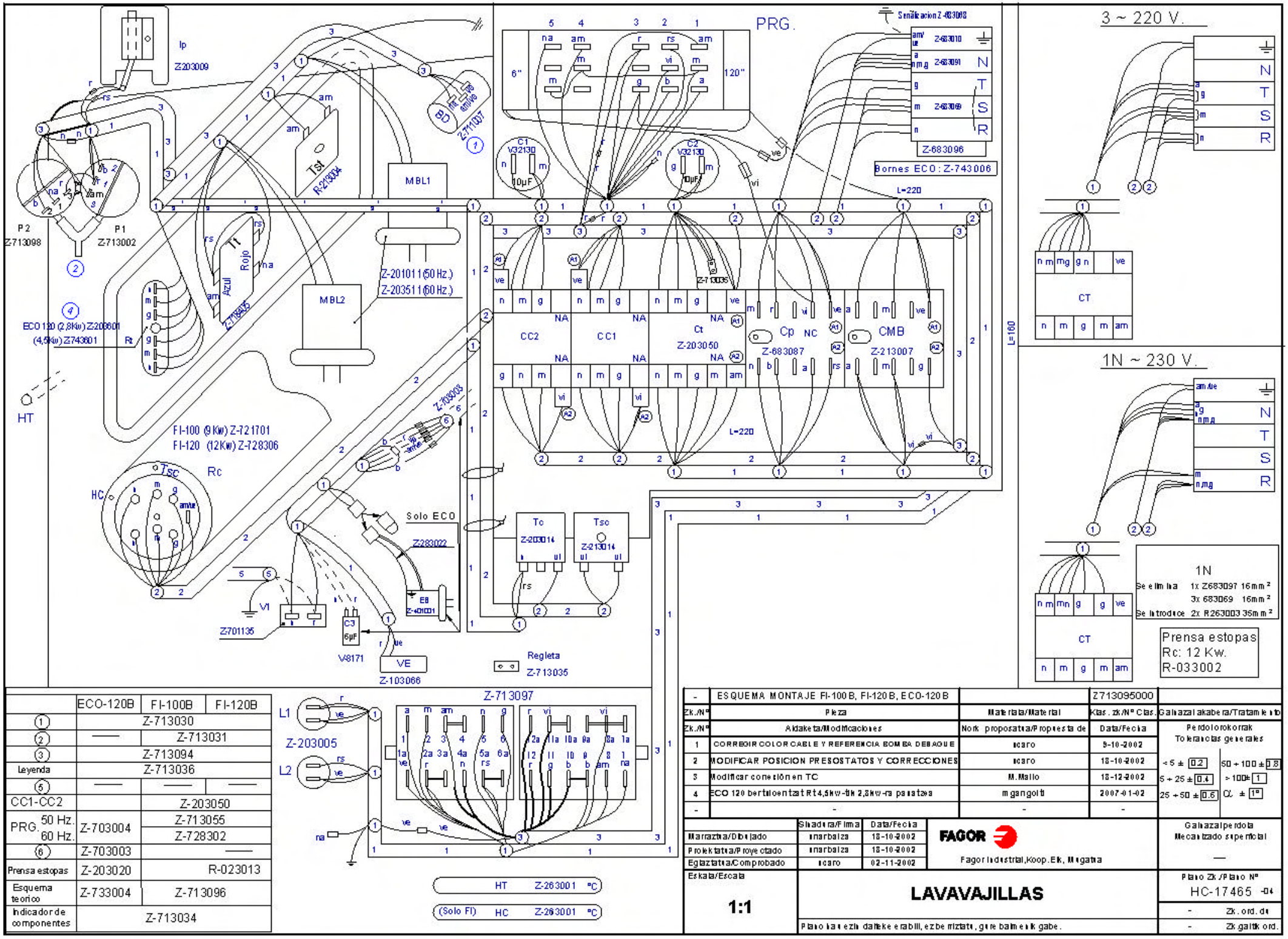


| | ECO-120B | FI-100B | FI-120B |
|---|---|---|---|
| 1 | Z-713030 | | |
| 2 | —— | Z-713031 | |
| 3 | Z-713094 | | |
| Leyenda | Z-713036 | | |
| 5 | —— | —— | —— |
| CC1-CC2 | Z-203050 | | |
| PRG. 50 Hz. | Z-703004 | Z-713055 | |
| PRG. 60 Hz. | | Z-728302 | |
| 6 | Z-703003 | —— | |
| Prensa estopas | Z-203020 | R-023013 | |
| Esquema teorico | Z-733004 | Z-713096 | |
| Indicador de componentes | Z-713034 | | |

| - | ESQUEMA MONTAJE FI-100B, FI-120B, ECO-120B | | Z713095000 | |
|---|---|---|---|---|
| Zk./Nº | Pieza | Materiala/Material | Klas. zk./Nº Clas. | Galvazal akabera/Tratamiento |
| Zk./Nº | Aldaketa/Modificaciones | Nork proposatua/Propuesta de | Data/Fecha | Perdoloroko rrak Tolerancias generales |
| 1 | CORREGIR COLOR CABLE Y REFERENCIA BOMBA DESAGUE | Icaro | 9-10-2002 | |
| 2 | MODIFICAR POSICION PRESOSTATOS Y CORRECCIONES | Icaro | 18-10-2002 | < 5 ± 0.2 / 50 ÷ 100 ± 0.8 |
| 3 | Modificar conexión en TC | M.Mallo | 18-12-2002 | 5 ÷ 25 ± 0.4 / > 100 ± 1 |
| 4 | ECO 120 bertsioentzat Rt 4,5kw-tik 2,8kw-ra pasatzea | mgangoiti | 2007-01-02 | 25 ÷ 50 ± 0.6 / ∠ ± 1º |
| - | - | - | - | |

| | Sinadura/Firma | Data/Fecha |
|---|---|---|
| Marrazkia/Dibujado | inarbaiza | 18-10-2002 |
| Proiektatua/Proyectado | inarbaiza | 18-10-2002 |
| Eglaztatua/Comprobado | icaro | 02-11-2002 |

FAGOR
Fagor Industrial,Koop.Elk, Mugatza

Eskala/Escala **1:1**

# LAVAVAJILLAS

Galvazal perdola
Mecanizado superficial
—

Plano Zk./Plano Nº HC-17465 -04

- Zk. ord. da
- Zk. galtik ord.

Planoa ezin daiteke erabili, ezbeharrizkoa, gure baimenik gabe.

# VDS 120

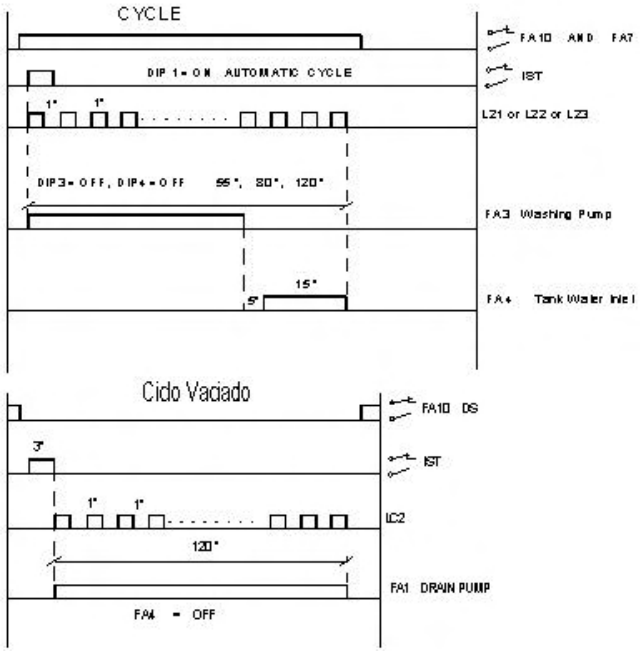


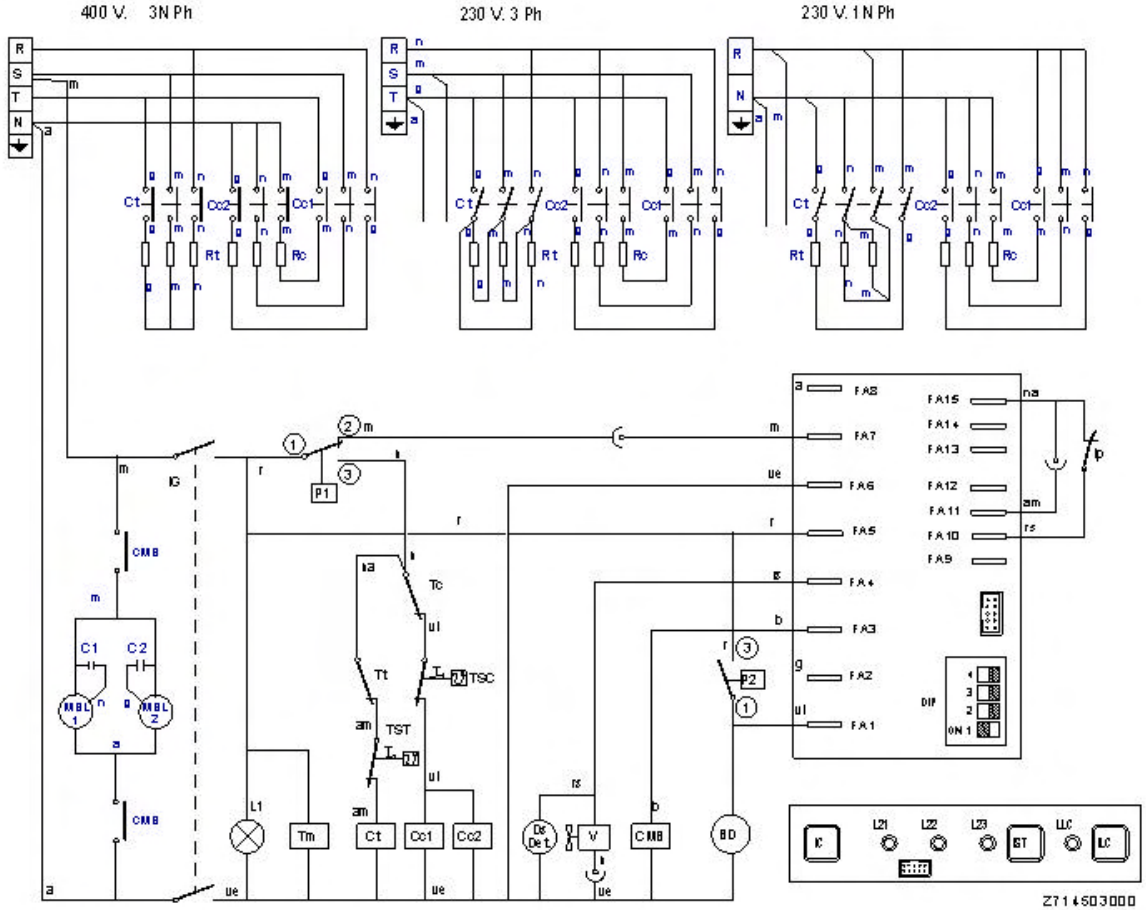


| | | | | | |
|---|---|---|---|---|---|
| - | Esquema teorico VDS 120 | - | - | Z714503000 | - |
| Zk./Nº | Pieza | Cant. | Materiala/Material | Klas. zk./Nº Clas. | Gainazal akabera/Tratamiento |
| Zk./Nº | Aldaketa/Modificaciones | | Nork proposatua/Propuesta de | Data/Fecha | Perdolorokorrak<br>Tolerancias generales |
| - | - | | - | - | |
| - | - | | - | - | < 5 ± 0.2 / 50 ÷ 100 ± 0.8 |
| - | - | | - | - | 5 ÷ 25 ± 0.4 / > 100 ± 1 |
| - | - | | - | - | 25 ÷ 50 ± 0.6 / α ± 1 |
| - | - | | - | - | |

| | Sinadura/Firma | Data/Fecha |
|---|---|---|
| Marraztua/Dibujado | M. Mallo | 30-03-2007 |
| Proiektatua/Proyectado | M. Mallo | 30-03-2007 |
| Egiaztatua/Comprobado | [signature] | 30-03-2007 |

FAGOR

Fagor Industrial, Koop. Elk, Mugatua

Gainazal perdola
Mecanizado superficial
—

Eskala/Escala
-

**LAVAVAJILLAS CAPOTA**

Plano Zk./Plano Nº
HC - 18059

- Zk. ord. du
- Zk. gaitik ord.

Plano hau ezin daiteke erabili, ez berriztatu, gure baimenik gabe.

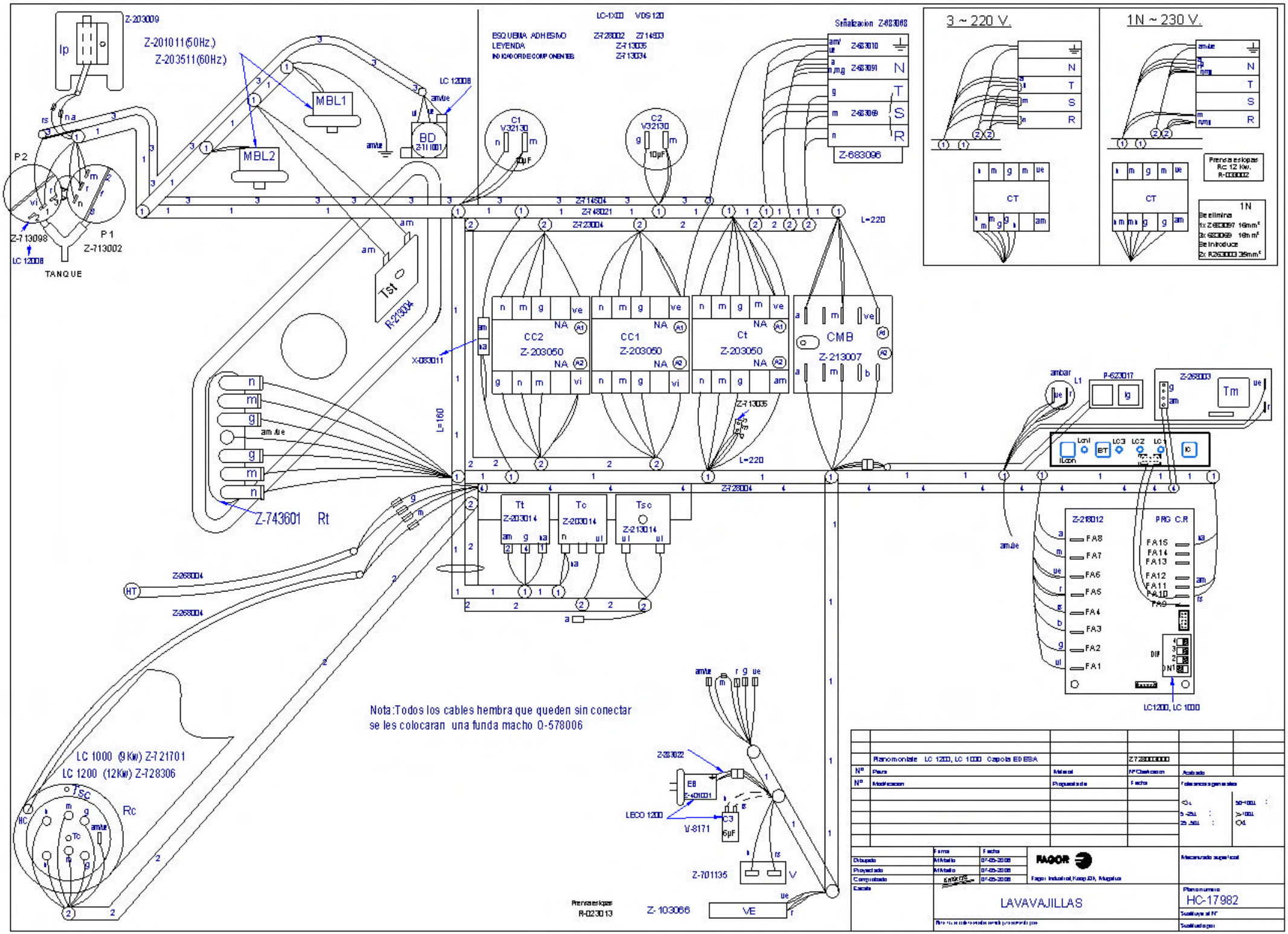

Z-203009
Ip
Z-201011(50Hz.)
Z-203511(60Hz)
MBL1
MBL2
LC 12008
BD
Z-711001
P2
P1
Z-713098
Z-713002
LC 12008
TANQUE
Tst
R-213004
LC-1X00 VDS 120
ESQUEMA ADHESIVO Z-728002 Z-714503
LEYENDA Z-713035
INDICADOR DE COMPONENTES Z-713034
C1
V32130
C2
V32130
Señalizacion Z-683068
Z-683010
Z-683091
Z-683069
Z-683096
3 ~ 220 V.
1N ~ 230 V.
CT
Prensa estopas
Rc 12 Kw.
R-033002
1N
Se elimina
1x Z-683097 16mm²
3x 683069 16mm²
Se introduce
2x R263003 35mm²
Z-714504
Z-748021
Z-723004
L=220
CC2
Z-203050
CC1
Z-203050
Ct
Z-203050
CMB
Z-213007
X-083011
L=160
Z-713035
Z-743601 Rt
Tt
Z-203014
Tc
Z-203014
Tsc
Z-213014
Z-728004
Z-268004
HT
P-623017
Z-268003
Tm
Z-218012
PRG C.R
FA8
FA7
FA6
FA5
FA4
FA3
FA2
FA1
FA15
FA14
FA13
FA12
FA11
FA10
FA9
DIP
LC1200, LC 1000
Nota:Todos los cables hembra que queden sin conectar
se les colocaran una funda macho Q-578006
LC 1000 (9Kw) Z-721701
LC 1200 (12Kw) Z-728306
Tsc
Rc
Z-283022
E8
Z-401001
LECO 1200
V-8171
C3
6µF
Z-701135
V
Prensa estopas
R-023013
Z-103066
VE
Planomontaje LC 1200, LC 1000 Capota EDESA
Z728003000
Nº Pieza
Material
Nº Clasificacion
Acabado
Nº Modificacion
Propuesta de
Fecha
Tolerancias generales
Dibujado
Proyectado
Comprobado
Escala
Firma
Fecha
07-05-2008
FAGOR
Fagor Industrial, Koop.Ltd, Mugalua
Mecanizado superficial
LAVAVAJILLAS
Planonumero
HC-17982
Sustituye al Nº
Sustituido por

# LEYENDA CAPOTA

| | ESPAÑOL | FRANÇAIS | ENGLISH | DEUTSCH | ITALIANO |
|---|---|---|---|---|---|
| ⒶⒷⓁ | Puntos de conexion con R | Points de conexion R | Conecction point with R | Anschlußpunkte mit R | Punti di collegamento con R |
| BD | Bomba desagüe | Pompe de vidange | Drain pump | Abflußpumpe | Pompa scarico |
| C 1/2/3 | Condensador | Condensateur | Condenser | Kondensator | Condensatore |
| CMB | Contactor bomba lavado | Contacteur pompe lavage | Wash pump contactor | Kontaktschütz Waschpumpe | Contattore pompa lavaggio |
| Cc 1/2 | Contactor calentamiento calderin | Contacteur chauf. surchauffeur | Boiler heating contactor | Kontaktschütz Boilerheizung | Contattore riscaldamento boiler |
| Ct | Contactor calentamiento tanque | Contacteur chaufage cuve | Tank heating contactor | Kontaktschütz Heizung Tank | Contattore riscaldamento serbatoio |
| CP | Rele puerta | Relais porte | Door relay | Türrelais | Rele porta |
| Ds.Det. | Dosificador detergente | Dosseur de detergent | Detergent doser | Dosierer Spülmittel | Dosatore detersivo |
| E.B | Electrobomba de presion | Electropompe de pression | Electric pressure pump | Elektro-Drucksteigungspumpe | Electropompa pressione |
| IG | Interruptor general | Interrupteur general | Main switch | Hauptschalter | Interruttore generale |
| IP | Micro puerta | Micro porte | Door microswitch | Mikroschalter Tür | Micro porta |
| L1 | Piloto de encendido | Voyant funcionement | Operation light | Betriebsanzeigelampe | Spia accensione |
| L2 | Piloto marcha | Voyant demarrage | Start light | Startanzeigelampe | Spia avvio |
| L3 | Piloto maquina preparada | Voyant machine prêt | Light machine ready | Betriebsbereitschaftsanzeigelampe | Pilota macchina preparata |
| MBL 1/2 | Bomba lavado | Pompe lavage | Wash pump | Waschpumpe | Pompa lavaggio |
| M | Motor programador | Moteur du programmateur | Motor programmer | Motor Programmiervorrichtung | Motore programmatore |
| M Av. R | Motor program. avance rapido | Moteur du progr.avance rapide | Motor program. rapid advance | Motor Programmiervorrich. schneller Vorlauf | Motore programmatore avanzamento rapido |
| M1 | Micro programador marcha | Micro du programm. de marche | Micro programmer on | Motor Programmiervorrich. Betrieb | Micro programma. di funzionamento |
| M2 | Micro programador lavado | Micro du programm. de lavage | Micro programmer wash | Motor Programmiervorrich. Waschen | Micro programmatore di lavaggio |
| M3 | Micro programador aclarado | Micro du programm. de rinçage | Micro programmer on | Motor Programmiervorrich. Spülen | Micro programmatore di risciacquo |
| M4 | Micro programador Termo-stop | Micro du programm. Termo-stop | Micro programmer Termo-stop | Motor Programmiervorrich. Thermo-Stop | Micro programmatore Termo-stop |
| M5 | Micro programador avance | Micro du programm. avance | Micro programmer advance | Motor Programmiervorrich. Vorlauf | Micro programmatore avanzamento |
| M6 | Micro programador avance | Micro du programm. avance | Micro programmer advance | Motor Programmiervorrich. Vorlauf | Micro programmatore avanzamento |
| P, P1, P5 | Presostato | Pressostat | Pressure switch | Druckwächter | Pressostato |
| P2, P3, P4 | Presostato limitador | Pressostat de securité | Hi-limit pressure switch | Begrenzer Druckwächter | Pressostato limitatore |
| R | Rele de Generador de A.C. | Relais du Generateur | Generator rele | Relais Generator | Rele Generatore |
| ⓇⓃ | Toma de alimentac. Generador A.C. | Alimentation generateur | Water heater feeding | Stromversorgungsanschluß Gener. | Alimentazione generatore |
| RC | Resistencia calderin | Resistance surchauffeur | Boiler heating element | Heizwiderstand Boiler | Resistenza boiler |
| RT | Resistencia tanque | Resistance cuve | Tank heater | Heizwiderstand Tank | Resistenza serbatoio |
| Tt | Termostato tanque | Thermostat de cuve | Tank thermostat | Thermostat Tank | Termostato serbatoio |
| TC | Termostato calderin | Thermostat surchauffeur | Boiler thermostat | Thermostat kessel | Termostato boiler |
| Tst | Limitador tanque | Limitateur de cuve | Tank limiter | Begrenzer Tank | Limitatore serbatoio |
| TSC | Limitador calderin | Limiteur surchauffeur | Boiler Hi-limit | Begrenzer Boiler | Limitatore boiler |
| TSTP | Termostato termo-stop | Thermostat Termo-stop | Termo-stop Thermostat | Thermostat Termo-stop | Termostato Termo-stop |
| V | Electrovalvula llenado y aclarado | Electrovan. remplissage rinçage | Fill and rinse valve | Elektroventil Füllen und Spülen | Elettroval. riempimento e risciacquo |
| VE | Ventilador cuadro electrico | Ventilateur tableau electrique | Switchboard fan | Schalttafelventilator | Ventilatore quadro elettrico |
| COLOR | COLORES | COULEURS | COLOUR | FARBEN | COLORE |
| a = | Azul | Bleu | Blue | Blau | Blu |
| am = | Amarillo | Jaune | Yellow | Gelb | Giallo |
| am/ve = | Amarillo/verde | Jaune / vert | Yellow / green | Gelb/grün | Giallo/verde |
| b = | Blanco | Blanc | White | Weiß | Bianco |
| g = | Gris | Gris | Grey | Grau | Grigio |
| m = | Marrón | Marron | Brown | Braun | Marrone |
| n = | Negro | Noir | Black | Schwarz | Nero |
| na = | Naranja | Orange | Orange | Orange | Arancio |
| r = | Rojo | Rouge | Red | Rot | Rosso |
| rs = | Rosa | Rose | Pink | Rosa | Roseo |
| ve = | Verde | Vert | Green | Grün | Verde |
| vi = | Violeta | Violet | Purple | Violett | Viola |

Z-713036