SAGI - BASI REFRIGERATE
EM1A-2X - 15-12-1999 » 27-12-2001

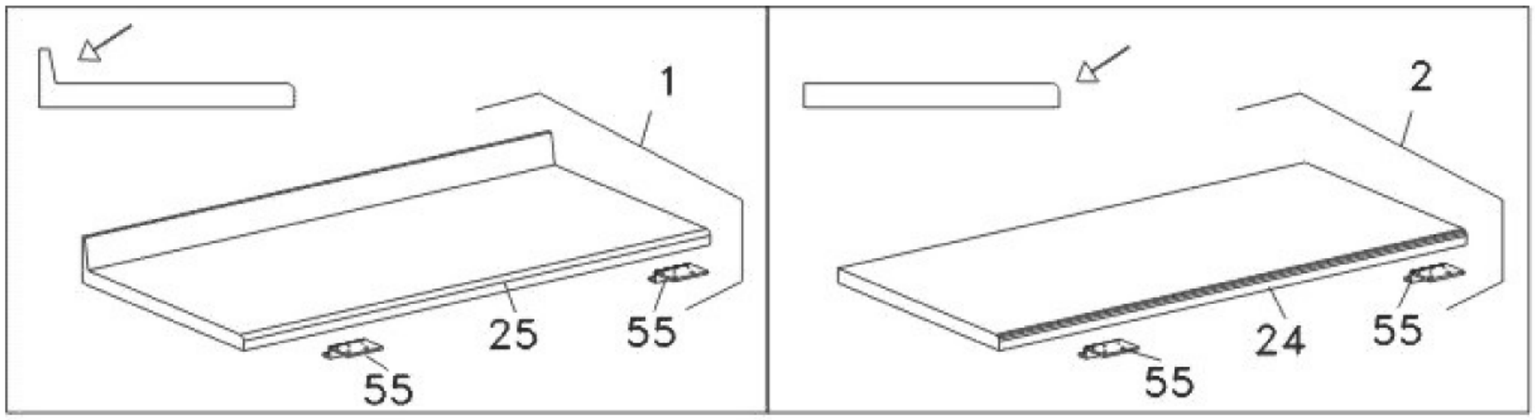

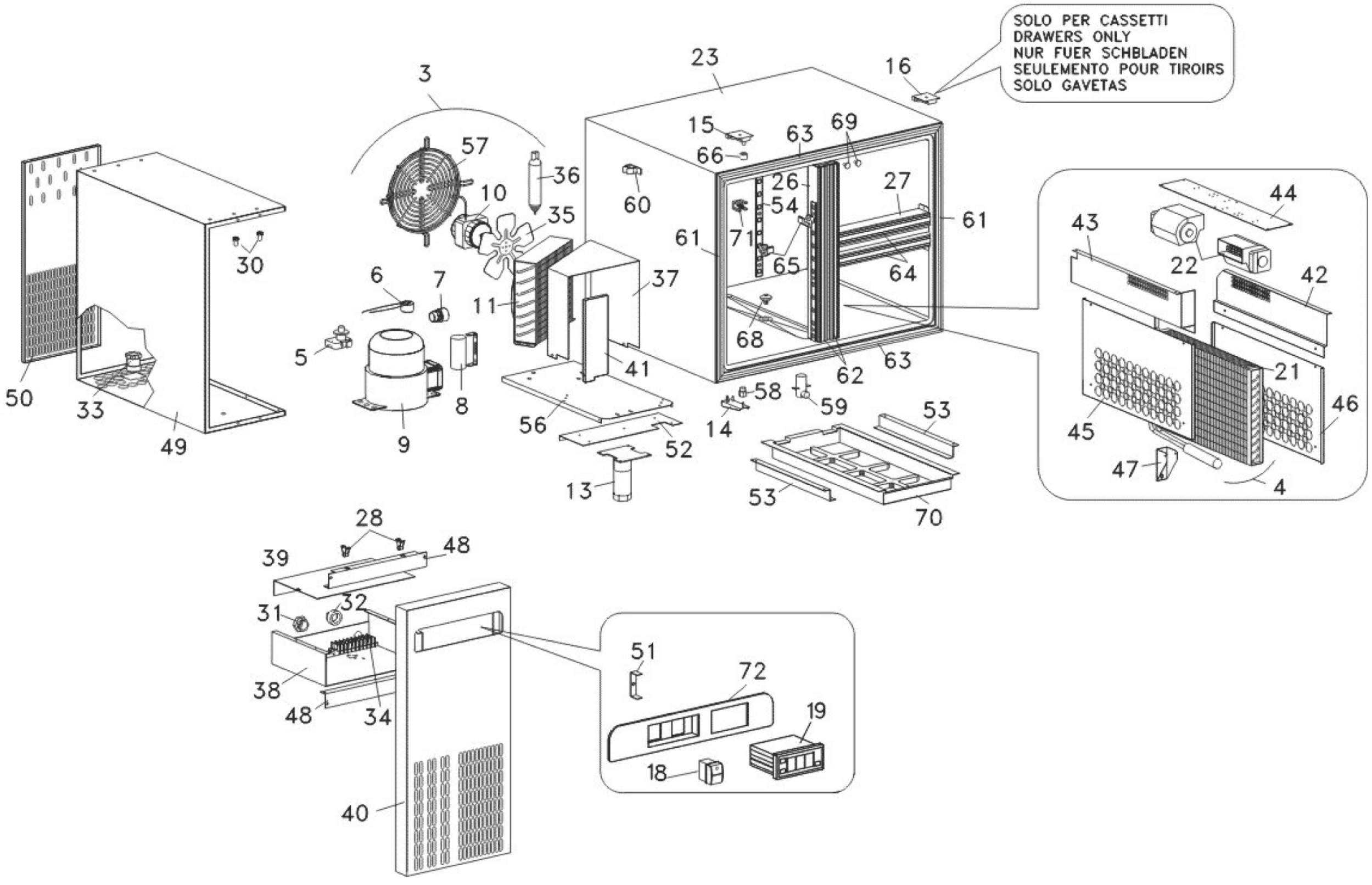

Modello Typ Model Modele Modelo

		EM1A EM1A/X EM1A/A	EM1A/2 EM1A/2X EM1A/2A	EM1B EM1B/X EM1B/A	EM1B/2 EM1B/2X EM1B/2A	EM1B/4 EM1B/4X EM1B/4A	EM1C EM1C/X EM1C/A	EM1C/2 EM1C/2X EM1C/2A	EM1C/4 EM1C/4X EM1C/4A	EM1C/6 EM1C/6X EM1C/6A
Porte Ture Doors Portes Portas Gabetas	SX	1	1	2	2	1	3	3	2	1
	DX	1	...	1	...	...	1	...	...	...

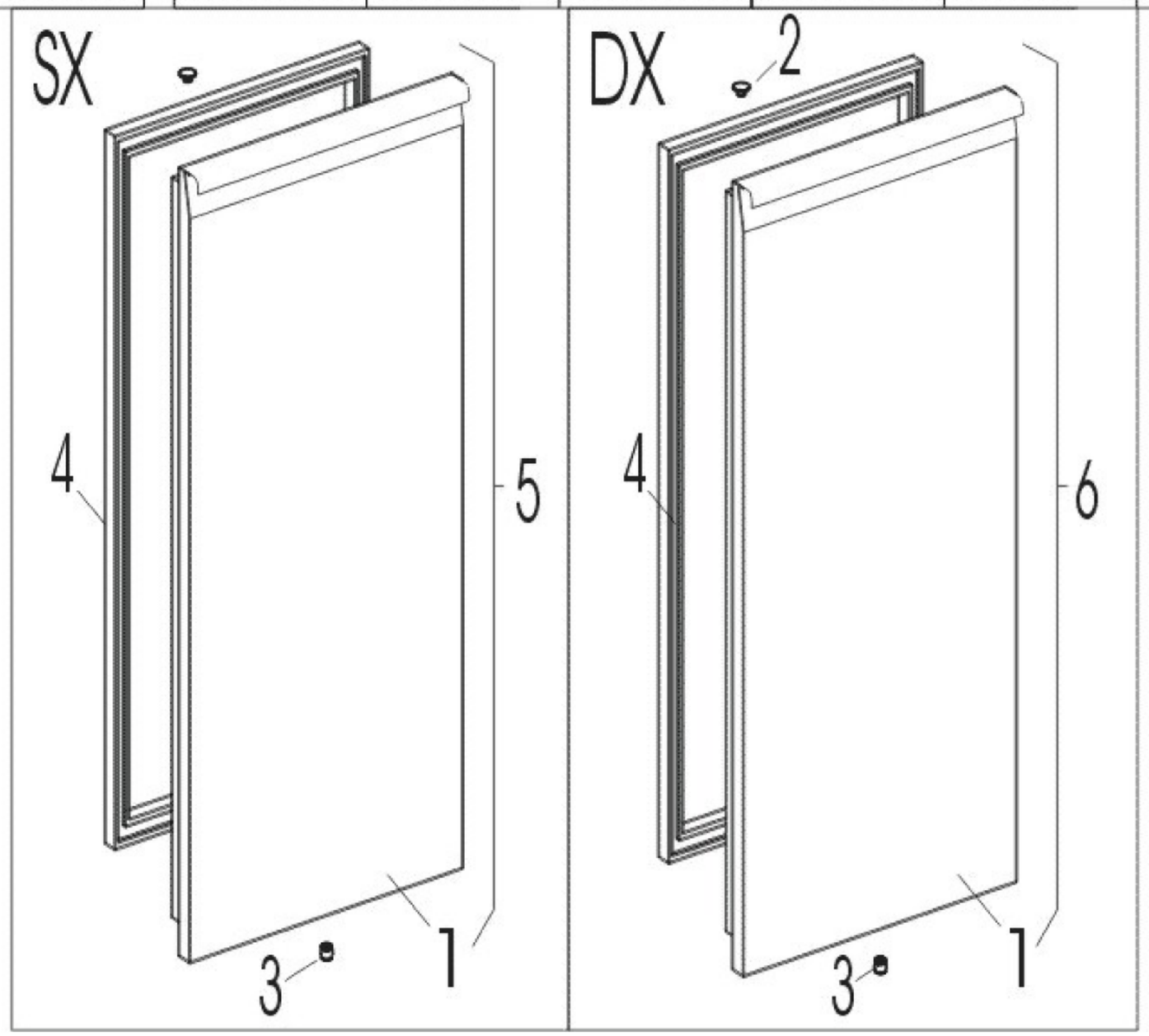

Modello Typ Model Modele Modelo

		EM1A EM1A/X EM1A/A	EM1A/2 EM1A/2X EM1A/2A	EM1B EM1B/X EM1B/A	EM1B/2 EM1B/2X EM1B/2A	EM1B/4 EM1B/4X EM1B/4A	EM1C EM1C/X EM1C/A	EM1C/2 EM1C/2X EM1C/2A	EM1C/4 EM1C/4X EM1C/4A	EM1C/6 EM1C/6X EM1C/6A
Num. Cassetti Schublad Drawers Tiroirs Gabetas	1/2	-	2	-	2	4	-	2	4	6

