FAGOR

SPARE PARTS CATALOGUE
ERSATZTEILKATALOG
CATALOGUE PIECES DETACHEES
CATALOGO PARTI RICAMBIO
CATALOGO DE PIEZAS DE RECAMBIO
CATALOGO PEÇAS DE REPOSIÇÃO

LP-130BDD

08-01-2020

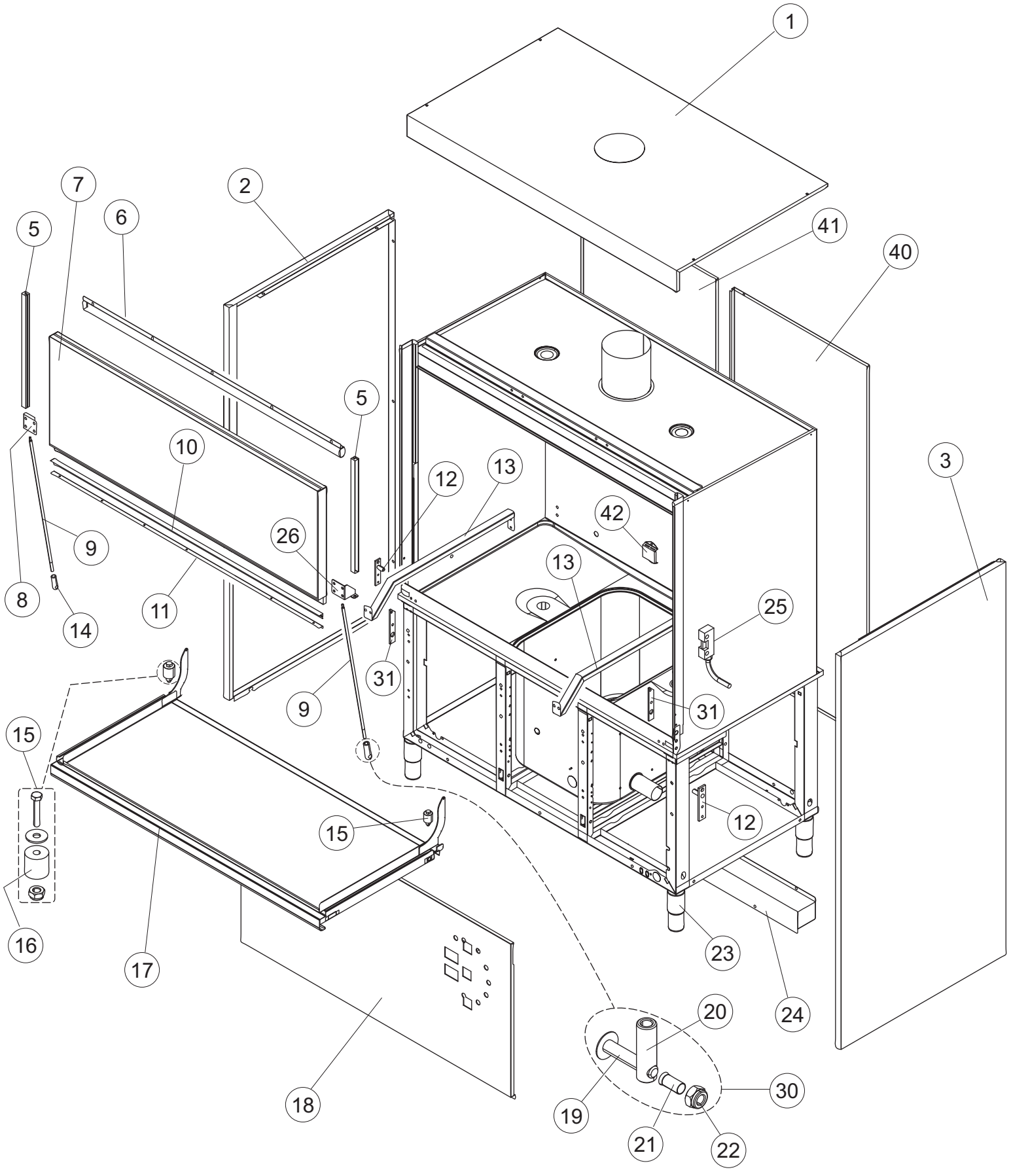
1
2
3
5
6
7
8
9
10
11
12
13
14
15
16
17
18
19
20
21
22
23
24
25
26
31
40
41
42

Listino componenti per pagina 1

1	67548	PANNELLO SUPERIORE HAUT PANNEAU PLATTE TOP PANEL PANEL SUP	
2	67210	PANNELLO LAT SX LP2 2018 PANNEAU LATERAL SEITENPANEEL SIDE PANEL PANEL LAT	
3	67214	PANNELLO LAT DX LP2 2018 PANNEAU LATERAL SEITENPANEEL SIDE PANEL PANEL LAT	
5	44265	GUIDA PORTA GUIDE GLISSANTE PORTE SUPERIEURE TÜR-GLEITENDER BAHN - OBEN - DOOR SLIDING GUIDE - UPPER GUIA PUERTA	
6	43055	BATTUTA SPORTELLO SUPERIORE ARRETR PORTE SUPERIEURE TÜRANSCHLAG, OBEN U132 TOP DOOR-STOP BAR TOPE PUERTA SUPERIOR	
7	K67380	KIT SOSTITUZIONE PORTA SUPERIORE LP.7 PORTE SUPERIEURE LP7 TÜR OBERER LP7 TOP DOOR LP7 PUERTA SUPERIOR LP7	
8	4108801	STAFFA SINISTRA PORTA console de support LINK-HALTER FUER ANKUPPELN OBEREN TUERSTANGE FUER support bracket ménsula de soporte	
9	44593	TIRANTE PORTA TIRANT PORTE HEBEL TUER MONT DOOR LEVER TIRANTE PUERTA	
10	43383	GUARNIZIONE PORTA JOINT POUR PORTE TUERDICHTUNG DOOR GASKET JUNTA PUERTA	
11	43382	SUPPORTO GUARNIZIONE SPORTELLO SUPERIORE BACK TUERDICHTUNGSHALTERUNG - OBEN FUER KOCHT OEPFESP DOOR PACKING SUPPORT - UPPER SOP. JUNTA PUERTA SOP. U132	
12	4114501	PIASTRA PORTA PLAQUE PETITE POUR PIVOT PORTE PLATTE, TÜRANGEL U61.. SMALL PLATE FOR DOOR PIN PLANCHITA PERNO PUERTA U61. .	
13	42539	GUIDA CESTO GUIDE PANIER KORBFUEHRUNG RACK SLIDE GUIA CESTA	
14	K41095	GRUPPO BOCCOLA TIRANTE PORTA BOUCLE SUPERIEURE TIRANT PORTE BUCHSE, TÜRZUGSTAB UPPER BUSH FOR DOOR TIE CASQUILLO TIRANTE PUERTA	
15	K80105LP	GRUPPO TAMPONE BATTUTA PORTA SHOCK-ABSORBER FOR CAPOT PUFFER FÜR DURCHSCHUBSPÜLAUTOM. PARE-CHOCS HOOD TYPE GUARDAGOLPES CAPOT	
16	80105 *Recommended spare parts*	TAMPONE FERMO PORTA / CAPPA arrêt de porte / CAPOT Türanschlag HOOD / DOOR STOP parada de la puerta	

17	67418	PORTA INFERIORE LP.7 PORTE INFERIEURE UNTERE TUR LOWER DOOR PUERTA INFERIOR	
18	67528	PANNELLO ANTERIORE D LP.7 CPL PANNEAU AVANT FRONTPANEEL FRONT PANEL PANEL FRONTAL	
19	486078 *Recommended spare parts*	VITE IN ACCIAIO INOSSIDABILE SPEC. 6MA VIS EN ACIER INOXYDABLE 6MAX30 T.1/2 TC SCHRAUBE TC-CE M6X40 INOX STAINLESS STEEL SCREW 6MAX30 T.1/2 TC TORNILLO TC-CE M6X40 INOX	
20	41095	BOCCOLA SUPERIORE TIRANTE SPORTELLO PER LAVAPENTC BOUCLE SUPERIEURE TIRANT PORTE POUR LAVE -CASSEROI BUCHSE, TÜRZUGSTAB 610/610H UPPER BUSH FOR DOOR TIE FOR POT AND PAN WASHERS CASQUILLO TIRANTE PUERTA 610/610H	
21	DZT7981	TRONCH TUBO INOX D 10X1,5 L=16MM TRONC TUYAU INOX D 10X1,5 L=16MM STUTZEN, INOX D 10X1,5 L=16MM STUB PIPE, INOX D 10X1,5 L=16MM VER CODIGO 926265	
22	CDI206AU	DADO AUTOBLOCCANTE ECROU AUTOBLOCK SCHRAUBENM./SELBSTSICH. A2 UNI7474 M6 INOX (UNTEN) NUT - SELF-LOCK TUERCA/AUTOBLOCK	
23	927006	PIEDE VERRIN VERSTELLFUSS FÜR KORBTR. FOOT PATA REGULABLE	
24	67526	PANNELLO RETRO INFERIORE LP3 PANNEAU ARRIERE RUECKWAND BACK PANEL PANEL TRASERO	
25	80871 *Recommended spare parts*	MICRO MAGNETICO CONTACTE MAGNETIQUE TUERKONTAKTSCHALTER MAGNETIC DOOR SWITCH CONTACTO MAGNETICO	
26	4108701	STAFFA DESTRA PORTA console de support CHAUDIÈRE RECHT-HATER FUER ANKUPPELN DER OBEREN TUER-STANG DOOR BRACKET DERECHA TOPE PUERTA	
30	K41095	GRUPPO BOCCOLA TIRANTE PORTA BOUCLE SUPERIEURE TIRANT PORTE BUCHSE, TÜRZUGSTAB UPPER BUSH FOR DOOR TIE CASQUILLO TIRANTE PUERTA	
31	4113501	SPESSORE PORTA EPAISSEUR LATERAL PORTE DX/SX SEITL. EINLEGERING FÜR TÜR DOOR SIDE THICKNESS - DX/SX GROSOR LAT. PUERTA	
40	67521	PANNELLO POSTERIORE SKIN/PLATE LP3 2018 PANNEAU ARRIERE PLATTE, HINTEN BACK PANEL PANEL TRASERO	
41	67522	PANNELLO POSTERIORE SKIN/PLATE LP3 2018 PANNEAU ARRIERE PLATTE, HINTEN BACK PANEL PANEL TRASERO	
42	43527	PROTEZIONE PROTECTION SCHUTZVERKLEIDUNG GUARD SOPORTE DE PROTECCION	

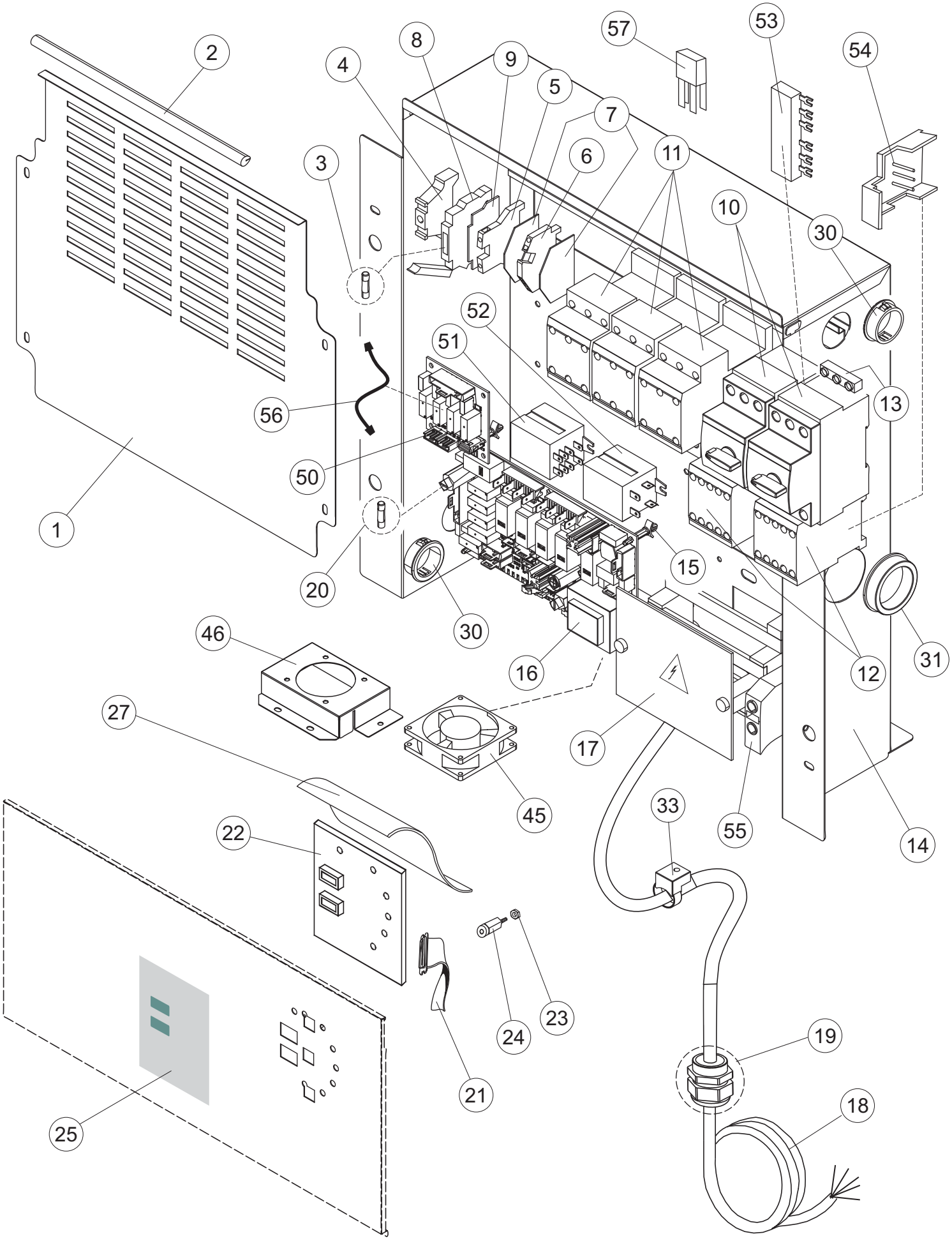
1
2
3
4
5
6
7
8
9
10
11
12
13
14
15
16
17
18
19
20
21
22
23
24
25
27
30
30
31
33
45
46
50
51
52
53
54
55
56
57

Listino componenti per pagina 2

1	67507	COPERCHIO QUADRO ELETTRICO LP.7 COUVERCLE VERSCHLUSSDECKEL COVER TAPA	
2	K67061	GUARNIZIONE IMPIANTO PROFILE PROFIL, SEAL PERFIL	
3	228014 *Recommended spare parts*	FUSIBILE 5X20 T4A FUSIBLE SICHERUNG FUSE FISIBLE	
4	75817	MORSETTO PER BARRA OMEGA CONNECTEUR ÉLECTRIQUE POUR U-FORME BARRE ELEKTRISCHER VERBINDER ZUM STABFÖRMIGEN ELECTRICAL CONNECTOR FOR U-SHAPED BAR CONECTOR ELÉCTRICO PARA VARILLA EN FORMA DE U	
5	927114	MORSETTIERA SIEMENS 35MM 8WA10111PM00 bornier pour le raccordement KLEMMENB. SIEMENS 35MM 8WA1-735(ERDUNG) TERMINAL BLOCK bloque de terminales	
6	80822	MORSETTO 2,5MM 24A (ART.280-641) GRIGIO BORNE KLEMME TERMINAL BORNE 2,5MM 24A (ART.280-641) GRIS	16x
7	80824	MORSETTO BORNE KLEMME TERMINAL BORNERO	
8	74935	PORTA FUSIBILE 5X20 PORTE-FUSIBLE *SICHERUNGSTRAGER FUSE-HOLDER PORTA-FUSIBLE	
9	H.228048	TAPPO PORTAFUSIBILE BOUCHON * SICHERUNGSTRAGER-VERSCHLUSS PLUG TAPON	
10	DEI38N	INT AUT 3X25A 4,5/6,3A 3RV2011-1GA10 INTERRUCTEUR AUTOMATIQUE AUT. SCHALTER AUTOMATIC SWITCH INT AUT 3X25A 4,5/6,3A 3RV2011-1GA10	
11	73351 *Recommended spare parts*	CONTATTORE CONTACTEUR KONTAKT-GEBER 230-50/60HZ CONTACTOR CONTACTOR	
12	73350 *Recommended spare parts*	CONTATTORE CONTACTEUR KONTAKT-GEBER 230-50/60HZ CONTACTOR CONTACTOR	
13	80826	MORSETTO CONNECTEUR D'ALIMENTATION NETZANSCHLUSS POWER CONNECTOR CONECTOR DE ALIMENTACIÓN	
14	67511	PANNELLO PORTACOMPONENTI LP3 2018 PANNEAU COMPOSANTS LP3 2018 PANEEL LP3 2018 PANEL LP3 2018 PANEL COMPONENTES LP3 2018	
15	CWP2	PIEDINI SUPPORTO SCHEDA ELETTRONICA VERRIN STÜTZFÜSSE FÜR PLATINE (ART.DRA6A) FOOT PATA	

16	215041-9 *Recommended spare parts*	SCHEDA 215041+FIRMWARE34(FW_0_XXJ.Q014) CARTE ELECTRONIQUE 215041+FIRMWARE34 (FW_0_XXJ.Q01 KARTE ELEKTRONIK 215041+FIRMWARE34 (FW_0_XXJ.Q014) MAIN BOARD 215041+FIRMWARE34 (FW_0_XXJ.Q014) TARJETA electrónica 215041+FIRMWARE34 (FW_0_XXJ.Q014)	
17	75983	MORSETTIERA DI POTENZA DA 4POLI 125A bornier pour le raccordement KLEMMLEISTE 4P 600V TERMINAL BLOCK bloque de terminales	
18	75989	CAVO ALIMENTAZIONE 5X6MM (H07RN-F) CÂBLE ÉLECTRIQUE STROMKABEL POWER CABLE CABLE ELÉCTRICO	
19	75991	PRESSACAVO presse étoupe Kabelverschraubung CABLE GLAND pasacables	
20	228010 *Recommended spare parts*	FUSIBILE 5X20 T4A RITARDATO 250V FUSIBLE SICHERUNG 5X20 T4A FUSE FISIBLE	
21	74933 *Recommended spare parts*	CAVO FLAT (3200mm) CON GUAINA CABLE FLAT AVEC FOURREAU DE PROTECTION Flachbandkabel FLAT MIT HÜLLE FLAT CABLE WITH PROTECTIVE SHEATH CABLE FLAT CON VAINA	
22	80889 *Recommended spare parts*	TASTIERA COMANDI touche clavier commande TASTATURPLATINE CONTROL KEYBOARD TECLADO DE COMANDOS	
23	417119 *Recommended spare parts*	DADO ECROU SCHRAUBENMUTTER, M3 KUNST. WEISS NUT TUERCA	
24	419036 *Recommended spare parts*	DISTANZIALI SCHEDA ENTRETOISE X CARTE ELECTRONIQUE ABSTANDSSTÜCK, M3 INTERFACE BOARD DISTANCE KEEPERS DISTANCIADOR M3	
25	67829	INTERFACCIA ADESIVA DI CONTROLLO LP-60/60H/70/130 FAGC INTERFACE ADHÉSIVE CONTRÔLE LP-60/60H/70/130 FAGOR TASTATURFOLIEN LP-60/60H/70/130 FAGOR CONTROL ADHESIVE INTERFACE LP-60/60H/70/130 FAGOR INTERFAZ ADHESIVA DE CONTROL LP-60/60H/70/130 FAGOR	
27	80732	TELO PROTEZIONE PVC COMANDI BÂCHE DE PROTECTION SCHUTZABDECKUNG PROTECTIVE SHEET TOLDO PROTECCION PVC MANDOS	
30	70270	BOCCOLA DOUILLE BUSCH BUSH CASQUILLO	
31	69076	BOCCOLA IN PLASTICA (SB 1750-22 NERE) DOUILLE BUECHSE BUSH CASQUILLO DE PLASTICO (SB 1750-22 NEGROS	
33	80831	FASCETTA STRINGITUBO COLLIER DE SERRAGE SCHLAUCHSCHELLE HOSE CLAMP ABRAZADERA	
45	67623	VENTILATORE QUADRO 80X80 (230V-50/60HZ) VENTILATEUR CARRÉ 80X80 (230V-50 / 60HZ) 80X80 QUADRATISCHER LÜFTER (230V-50/60Hz 80X80 SQUARE FAN (230V-50 / 60HZ) VENTILADOR CUADRADO 80X80 (230V-50/60Hz)	

46	67046	STAFFA SUPPORTO EQUERRE DE FIXATION STÜTZWINKEL BRACKET BRIDA DE APOYO	
50	74903	SCHEDA ELETTRONICA CARTE ELECTRONIQUE KARTE ELEKTRONIK MAIN BOARD TARJETA electrónica	
51	929115 *Recommended spare parts*	RELE 16A-230V RELAIS 16A 230V RELAIS 16A 230V 62.82 RELAY 16A 230V RELE 16A 230V	
52	DER111 *Recommended spare parts*	RELE 30A 230AC 653182300300 RELAIS 30A 230AC 653182300300 RELAIS 30A 230AC 653182300300 RELAY 30A 230AC 653182300300 VER CODIGO 229029	
53	80829	BARRA COLLEGAMENTO ELETTRICO 3 FASE 2 INTER. (ART.3R BAR CONNEXION ÉLECTRIQUE BAR ELEKTRISCHER ANSCHLUSS BAR ELECTRICAL CONNECTION EMBARRADO CONEXIÓN ELÉCTRICA 3 F 2 INTER.(ART.3RV191	
54	73830	CONNETTORE CONNECTEUR STECKVERBINDER CONNECTOR CONECTOR	
55	74936	MORSETTO 35MMQ 750V COLORE BLU B.OMEGA BORNE KLEMME TERMINAL BORNE	
56	65911 *Recommended spare parts*	CAVETTO COLLEGAMENTO ESPANSIONE JST CÂBLAGE ÉLECTRIQUE ELEKTROVERKABELUNG ELECTRIC WIRING CABLEADO ELÉCTRICO	
57	80825	PONTICELLO COLLEGAMENTO ELETTRICO CAVALIER ÉLECTRIQUE ELEKTRO-BRÜCKE JUMPER PUENTE CONEXION ELÉCTRICA	

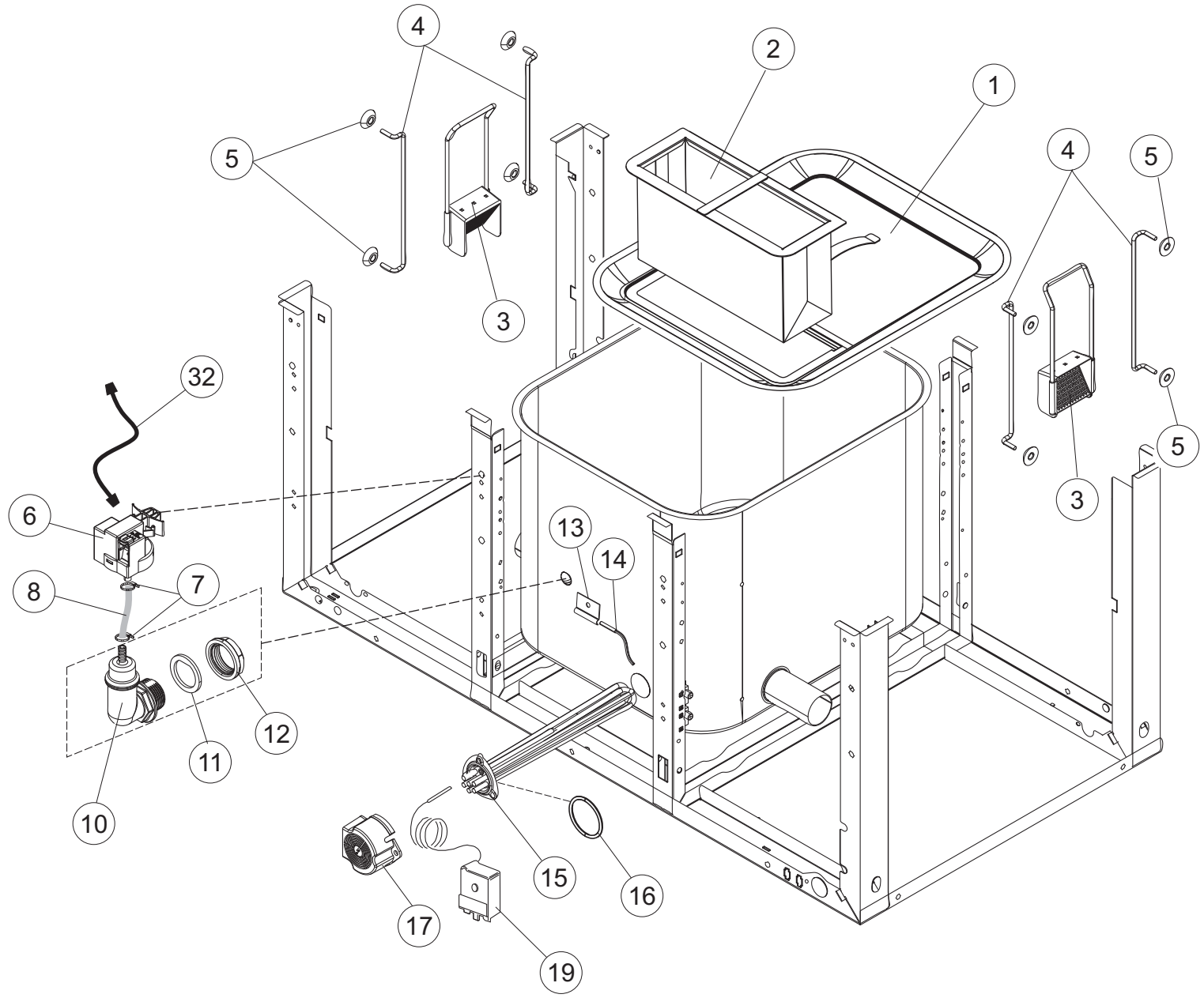
4
2
1
5
4
5
3
32
5
3
6
13
14
8
7
12
11
10
15
16
17
19

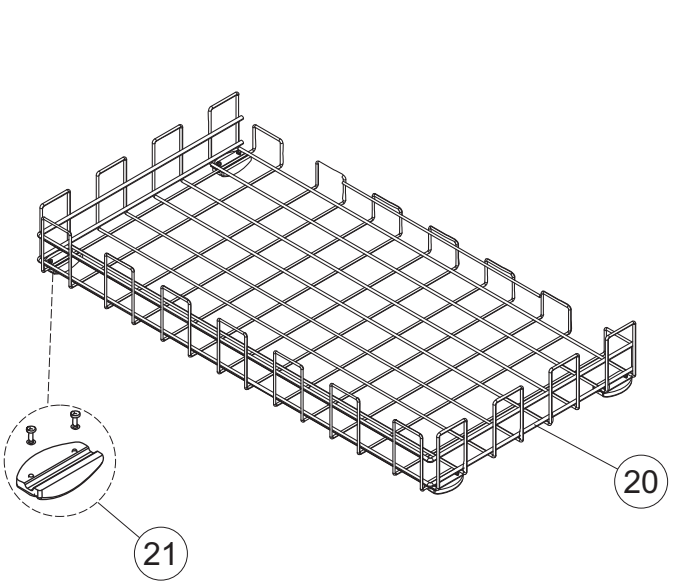
20
21

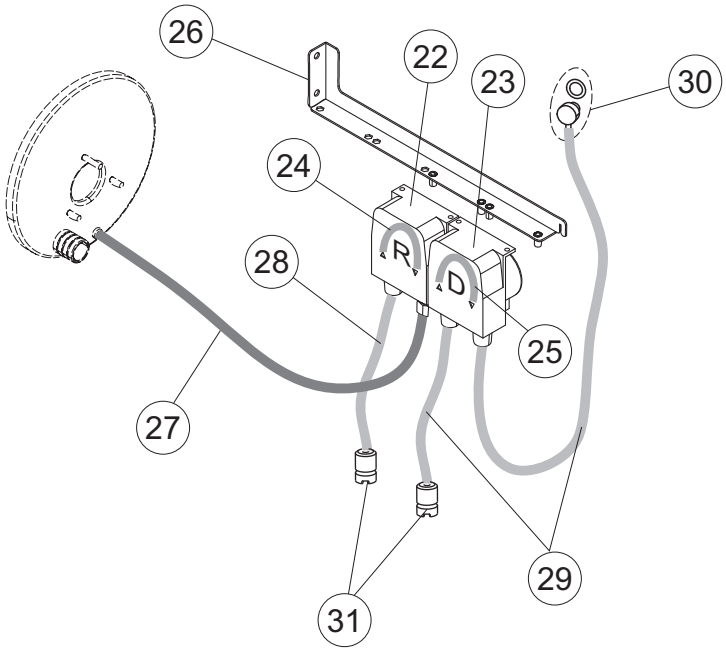
26
22
23
30
24
R
D
28
25
27
29
31

Listino componenti per pagina 3

1	43039	FILTRO VASCA COMPLETO PER LAVAPENTOLE FILTRE FILTER, TANK - KOMPL.U132 STAINER FILTRO	
2	43044	FILTRO VASCA A CASSETTO COMPLETO PER LP FILTRE FILTER, TANK - KASTENTYP KOMPL.U132 STAINER FILTRO	
3	75661	FILTRO ASPIRAZIONE POMPA FILTRE ASPIRATION POMPE PUMPENANSAUGSIEB PUMP ASPIRATION FILTER FILTRO ASPIRACION BOMBA	
4	42092	GUIDA FILTRO ASPIRAZIONE U70 GUIDE FILTRE ASPIRATION FÜHRUNG, ABSAUG.FILTER U70 ASPIRATION FILTER SLIDE GUIA FILTRO ASPIRACION U70	
5	472061	RONDELLA X GUIDA CESTO CL.3 RONDELLE UNTERLEGSCHEIBE, FÜR KORBFÜHRUNG KL.3 WASHER arandela	
6	224031 *Recommended spare parts*	PRESSOSTATO DIGITALE 560-AC-002 PRESSOSTAT DRUCKWAECHTER PRESSURE SWITCH PRESOSTATO	
7	423011	FASCETTA SERRAGGIO TUBI A MOLLA 8.1 Collier de serrage SCHELLE, FEDER HOSE CLAMP ABRAZADERA	
8	143235 *Recommended spare parts*	TUBO 4x7 SILICONE TRASPARENTE CRP TUYAU SCHLAUCH 4X7 SILIKON DURCHS. CRP PIPE MANGUITO	
10	70600 *Recommended spare parts*	TRAPPOLA ARIA ESTERNA cloche de pression Glocke fur druckschalter AIR TRAP for pressure switch CAMPANA PRESOSTATO	
11	437098 *Recommended spare parts*	GUARNIZIONE JOINT DICHTUNG FUER LUFTFALLE GASKET JUNTA	
12	417120 *Recommended spare parts*	DADO ECROU KUNSTSTOFFMUTTER 1-1/4 NUT TUERCA	
13	H.775489-001	CLIP SONDA TEMPERATURA D5 soutien sonde de température KLIPP FÜR TEMP.FÜHLER D5 Support temperature probe Soporte sonda de temperatura	
14	231016 *Recommended spare parts*	SONDA TEMPERATURA SONDE TEMPERATURSONDE TEMPERATURE PROBE SONDA TEMPERATURA (AMPOLLA ACERO)	
15	80397C	GRUPPO RESISTENZA 10500W (10,5KW) RESISTANCES 10500W 230/400V HEIZUNG 10500W 230/400V HEATING ELEMENT 10500W 230/400V RESISTENCIA ELECTRICA 10500W	
16	456002	guarnizione o-ring joint torique o-ring O-Ring 48x6,2 O-ring junta tórica o-ring	

17	69870	PROTEZIONE RESISTENZA BOILER PROTECTION RESISTANCE BOILER HEIZUNGSCHUETZ DES WARMWASSERBEREITERS BOILER HEATING ELEMENT PROTECTION PROTECCION RESISTENCIA CALENTADOR	
19	927057 *Recommended spare parts*	TERMOSTATO SICUREZZA THERMOSTAT THERMOSTAT, 3-KONTAKTE 90/110øC TYP LS1 THERMOSTAT TERMOSTATO 3 CONTACTOS 90/110ºC TIPO LS1	
20	43305	cestello in acciaio dotazione base panier en acier equipement de base Stahlkorb Basisausstattung STAINLESS STEEL BASIS RACK 1310X700 FOR equipamiento basico cesta de acero	
21	K41400	KIT RICAMBIO PATTINI CESTO LAVAPENTOLE KIT PATINS POUR PANIERS KIT GLEITSCHUHE FUER KORBE KIT RACK SLIDING BLOCKS KIT PATINES PARA CESTAS	
22	209042 *Recommended spare parts*	DOSAT.PERIST.BRILLANTANTE+NR P/F MD DOSEUR PÉRISTALTIQUE PERISTALTISCHES DOSIERGERAET DOSING PUMP DOSIFICADOR	
23	209043 *Recommended spare parts*	DOSAT.PERIST.DETERGENTE P/F MD DOSEUR PÉRISTALTIQUE PERISTALTISCHES DOSIERGERAET DETERGENT DOSING PUMP DOSIFICADOR DETERG.	
24	143261 *Recommended spare parts*	TUBO SILICONE TUBE MEMBRANSCHLAUCH HOSE TUBITO	
25	143258 *Recommended spare parts*	TUBO "SANTOPRENE" CON RACCORDO TUYAU "SANTOPRENE" MEMBRANSCHLAUCH SANTOPREN "SANTOPRENE" PIPE TUBITO SANTOPRENE	
26	67042	STAFFA DOSATORI console de support Stützwinkel support bracket SOPORTE DOSIFICADORES PG ACABADO	
27	143005 *Recommended spare parts*	TUBO IN GOMMA TELATA 5X12 NERO TUYAU EN CAOUTCHOUC LIN 5X12 NOIR SCHLAUCH TP 5X11 (CASER/15/NL C4N) LINEN RUBBER PIPE 5X12 - BLACK TUBO PRES. TP 5x11 (CASER/15/NL C4N)	
28	H.775601 *Recommended spare parts*	TUBO 4x6 CRISTAL BLUE PVC TUYAU SCHLAUCH 4x6 CRISTAL BLAU PVC PIPE MANGUITO	
29	143194 *Recommended spare parts*	TUBO 4x6 CRISTAL TRASPARENTE TUYAU SCHLAUCH 4X6 CRISTAL, DURCHS. PIPE MANGUITO	
30	999348	GRUPPO RACCORDO INIEZIONE DETERGENTE JUNCTION CUVE POUR INJECTION DE DÉTERGEN WASCHMITTEL INJECTION SPÜLANSCHLUSS DETERGENT TANK FITTING UNIÓN CUBA PARA INYECCIÓN DE DETERGENTE	
31	121993	GRUPPO FILTRO+ZAVORRA DOSATORE filtre distributeur FILTERANORDNUNG filter aid dispenser filtro dispensador	
32	87131	CABLAGGIO PRESS.VASCA ITW L=1240 LP.7 CÂBLAGE ÉLECTRIQUE ELEKTROVERKABELUNG ELECTRIC WIRING CABLEADO ELÉCTRICO	

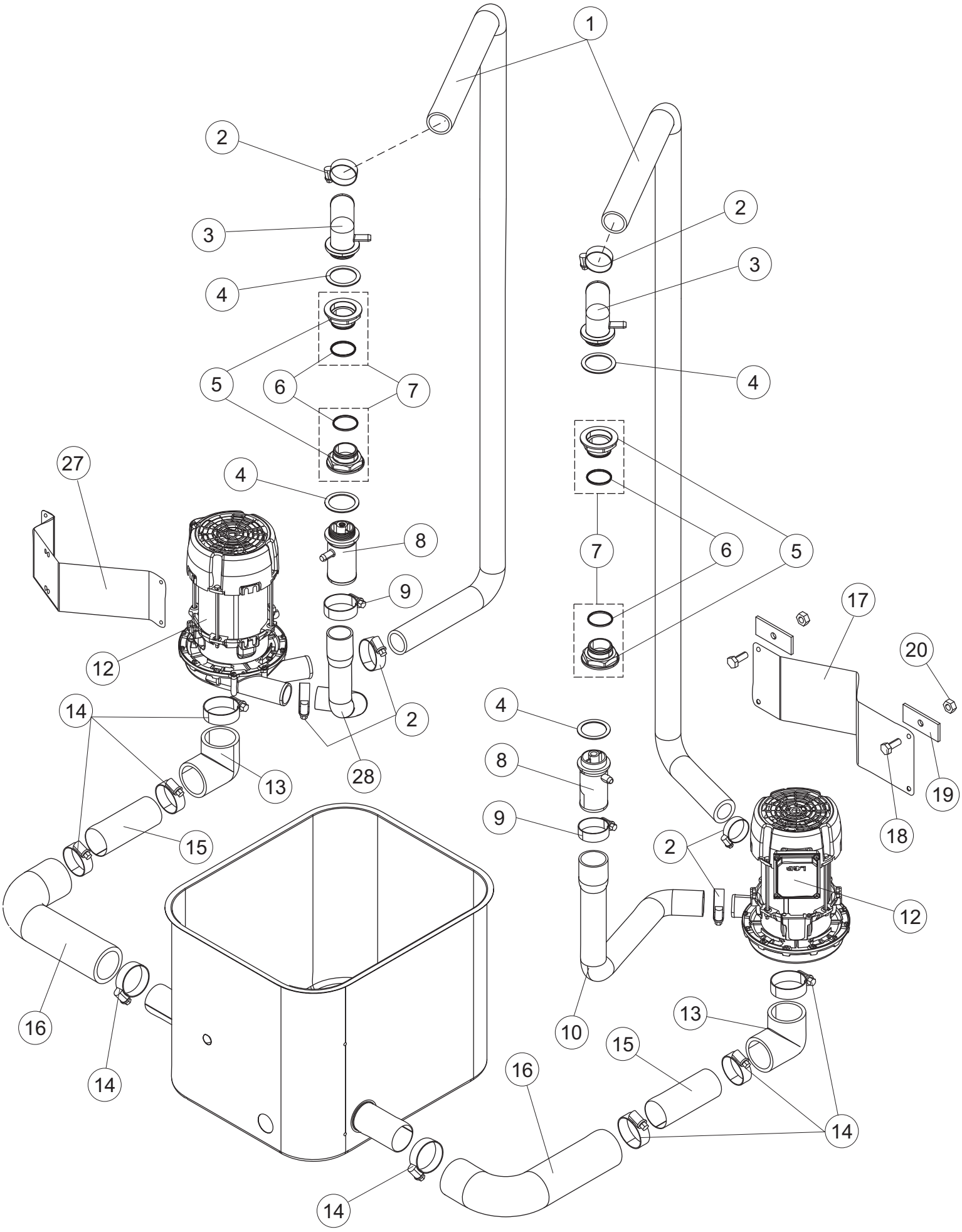
1
2
3
4
5
6
7
8
9
10
12
13
14
15
16
17
18
19
20
27
28

Listino componenti per pagina 4

1	67039	TUBO LAVAGGIO TUYAU ROHR PIPE MANGUITO	
2	CFS1A	FASCETTA SERRAGGIO TUBI Collier de serrage SCHELLE, SCHRAUBE TORRO W1/W2B 40-60/12 HOSE CLAMP ABRAZADERA	
3	67180	RACCORDO LAVAGGIO RACCORD ANSCHLUSS PIPE FITTING RECOGIDA	
4	80182	GUARNIZIONE MANDATA JOINT DICHTUNG, UNTEN VERSORGUNG DURCHSCHUBSP. RV. GASKET JUNTA	
5	80281	GHIERA LAVAGGIO INFERIORE INTERNA DOUILLE GEWINDERING, INN. UNT. SPÜLEN, HOCH RING NUT CONTERA VIROLA	
6	303032	ANELLO INOX DI TENUTA LAVAGGIO X5 BAGUE DICHTUNGSRING, INOX SPÜL. X5 INOX RING ANILLO INOX DE ESTANQ. LAVADO X5	
7	80285	GHIERA LAVAGGIO INFERIORE INTERNA DOUILLE GEWINDERING RING NUT CONTERA VIROLA	
8	67179	RACCORDO LAVAGGIO RACCORD ANSCHLUSS PIPE FITTING RECOGIDA	
9	CFS2	FASCETTA TORRO W1/W2B 50-70/12 BANDE DE SERRAGE TORRO W1/W2B 50-70/12 SCHELLE, TORRO W1/W2B 50-70/12 CLAMP, TORRO W1/W2B 50-70/12 ABRAZADERA TORRO W1/W2B 50-70/12	
10	67016	TUBO DI MANDATA LAVAGGIO INFERIORE LP2 2018 TUYAU DE REFOULEMENT MUFFE, VERSORGUNG INLET HOSE MANGUITO IMPULSION	
12	67600	ELETTROPOMPA 2.7KW LP2/LP3(400/230V-50) MOTOPOMPE 2.7KW LP2/LP3(400/230V-50) ELEKTROPUMPE 2.7KW LP2/LP3(400/230V-50) ELECTROPUMP 2.7KW LP2/LP3(400/230V-50) ELECTROBOMBA 2.7KW LP2/LP3(400/230V-50)	
13	926056	GOMITO D'ASPIRAZIONE IN GOMMA PER TUYAU a coudé KNIESTÜCK, GUMMI, ABSAUG.PUMPE 120/140 PIPE ELBOW tubo acodado	
14	CFS3	FASCETTA A VITE TORRO W2B 60-80/12 BANDE DE SERRAGE A VIS TORRO W2B 60-80/12 SCHELLE, SCHRAUBE TORRO W2B 60-80/12 CLAMP, HOSE-TYPE TORRO W2B 60-80/12 ABRAZADERA CON TORNILLO TORRO W2B	
15	67591	TUBO ASPIRAZIONE INOX D60X150X1 TUYAU SAUGMUFFE PIPE MANGUITO	
16	67592	MANICOTTO ASPIRAZIONE EPDM 70SH tuyau d'aspiration SAUGROHR suction pipe tubo de aspiración	

17	67557	STAFFA POMPA DX LP3 console de support PUMPENTRÄGER support bracket ménsula de soporte	
18	CVZ124F	VITE TE/FLANG/ZIG M8X20 FE/ZN DIN6921 VIS SCHRAUBE SCREW TORNILLO	
19	926064	guarnizione smorza vibrazioni joint amortit les vibrations UNTERFUSS FÜR SCHWINGUNGSDAMPF. PUMPE ZEICHN.002 seal dampens vibrations sello amortigua las vibraciones	
20	CDZ208R	DADO ZINC 8MA CON RONDELLA DENTELLATA ECROU GALV. 8MA AVEC RONDELLE DENTELEE SCHRAUBENM., VERZ. 8MA MIT GEZAHN. UNTERLEGSCHEIBE NUT, GALV. 8MA W/TOOTHED WASHER TUERCA GALV. 8MA CON ARANDELA DENTELLADA	
27	67555	STAFFA POMPA SX LP3 console de support PUMPENTRÄGER support bracket ménsula de soporte	
28	67038	TUBO MANDATA LAVAGGIO INFERIORE SX LP.7 DURITE FOERDERLEITUNG SPUELEN SLEEVE TUBO IMPULSION LAVADO	

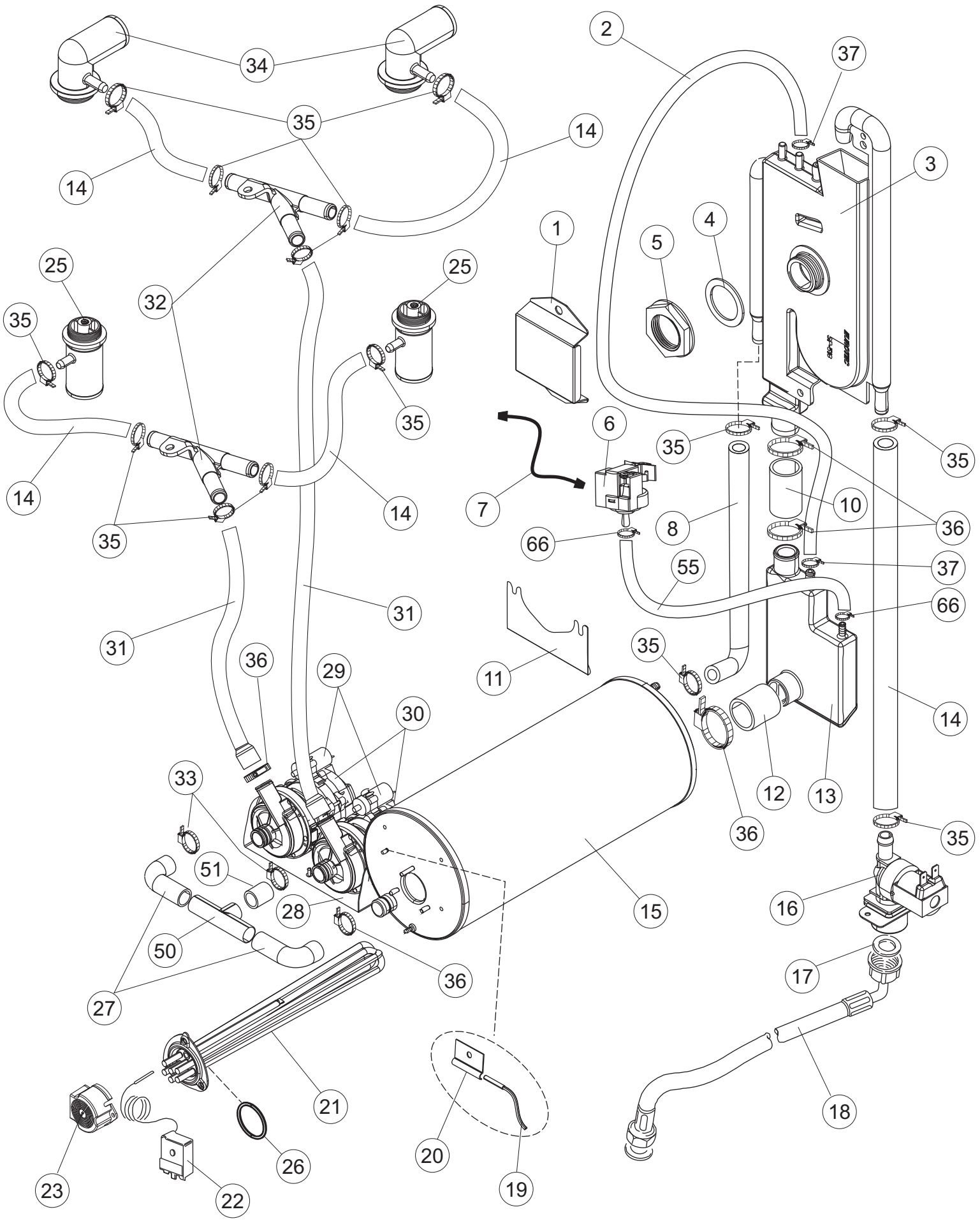
34
35
14
14
2
37
3
1
4
5
25
25
32
35
35
6
35
35
14
14
7
10
8
36
35
66
55
37
66
31
31
11
35
36
29
30
14
33
12
13
36
35
51
28
15
16
50
36
17
27
21
18
20
26
19
23
22

Listino componenti per pagina 5

1	43527	PROTEZIONE PROTECTION SCHUTZVERKLEIDUNG GUARD SOPORTE DE PROTECCION	
2	H.165168	TUBO TRASPARENTE TUYAU PVC SCHLAUCH PIPE MANGUITO	
3	144021	BREAKTANK BREAK TANK AIR GAP GEOFFNETER BEHAELTER BREAK TANK BREAK TANK	
4	437104	GUARNIZIONE D45D33S2 EPDM 70SH JOINT DICHTUNG GASKET JUNTA	
5	417125	DADO ECROU MUTTER NUT TUERCA	
6	224031 *Recommended spare parts*	PRESSOSTATO DIGITALE 560-AC-002 PRESSOSTAT DRUCKWAECHTER PRESSURE SWITCH PRESOSTATO	
7	87132	CABLAGGIO COLLEG.PRESS.BOILER ITW LP.7 CABLAGE WIRING WIRING CABLEADO	
8	143004	TUBO TUYAU ROHR, DRUCKSCHALTER TP 10X17 (CASER/15NL C4N) PIPE TUBO PRES. TP 10X17 (CASER/15NL C4N)	
10	929171	TUBO IN GOMMA 20X29 TUYAU EN CAOUTCHOUC 20X29 SCHLAUCH, GUMMI 20X30 RUBBER PIPE 20X29 TUBO GOMA 20X30	
11	43214	STAFFA SUPPORTO BOILER console de support CHAUDIÈRE TRAGBUEGEL BOILER BRACKET SOPORTE CALENTADOR	
12	127095 *Recommended spare parts*	MANICOTTO BOILER MANCHON CHAUDIÈRE MUFFE BOILER PIPE MANGUITO PURGA CALDERIN	
13	144032 *Recommended spare parts*	SISTEMA CARICAMENTO BOILER CRP CON CAMPANA PRESSC SYSTÈME CHARGEMENT DE CHAUDIÈRE CRP AIR GAP GEOFFNETER BEHAELTER LOADING SYSTEM BOILER CRP WITH BELL PRESSURE SWITCI SISTEMA CARGA DE CALDERIN CRP	
14	143004	TUBO TUYAU ROHR, DRUCKSCHALTER TP 10X17 (CASER/15NL C4N) PIPE TUBO PRES. TP 10X17 (CASER/15NL C4N)	
15	67550	BOILER 17LT LP3 CHAUDIÈRE 17LT LP3 BOILER 17LT LP3 BOILER 17LT LP3 CALDERIN 17LT LP3	
16	240018 *Recommended spare parts*	ELETTROVALVOLA ELECTROVANNE ZUFLUSSVENTIL 1-WEG CRP SOLENOID VALVE ELECTROVALVULA	

17	437041	GUARNIZIONE 3/4 JOINT DICHTUNG 3/4 GASVERSORG. GASKET JUNTA	
18	143270	TUBO CARICO 3/4G D.I.10 2MT TUYAU SCHLAUCH INLET WRAS PIPE TUBO WRAS	
19	231016 *Recommended spare parts*	SONDA TEMPERATURA SONDE TEMPERATURSONDE TEMPERATURE PROBE SONDA TEMPERATURA (AMPOLLA ACERO)	
20	H.775489-001	CLIP SONDA TEMPERATURA D5 soutien sonde de température KLIPP FÜR TEMP.FÜHLER D5 Support temperature probe Soporte sonda de temperatura	
21	80397C	GRUPPO RESISTENZA 10500W (10,5KW) RESISTANCES 10500W 230/400V HEIZUNG 10500W 230/400V HEATING ELEMENT 10500W 230/400V RESISTENCIA ELECTRICA 10500W	
22	927057 *Recommended spare parts*	TERMOSTATO SICUREZZA THERMOSTAT THERMOSTAT, 3-KONTAKTE 90/110øC TYP LS1 THERMOSTAT TERMOSTATO 3 CONTACTOS 90/110ºC TIPO LS1	
23	69870	PROTEZIONE RESISTENZA BOILER PROTECTION RESISTANCE BOILER HEIZUNGSCHUETZ DES WARMWASSERBEREITERS BOILER HEATING ELEMENT PROTECTION PROTECCION RESISTENCIA CALENTADOR	
25	67179	RACCORDO LAVAGGIO RACCORD ANSCHLUSS PIPE FITTING RECOGIDA	
26	456002	guarnizione o-ring joint torique o-ring O-Ring 48x6,2 O-ring junta tórica o-ring	
27	43565	TUBO RISCIACQUO TUYAU RINCAGE ROHR RINSE PIPE MANGUITO ACLARADO	
28	43570	STAFFA POMPA console de support BUEGEL support bracket ménsula de soporte	
29	206013 *Recommended spare parts*	CONDENSATORE CONDENSEUR KONDENSATOR 4 MF FÜR WASCHPUMPE CAPACITOR CONDENSADOR	
30	80627 *Recommended spare parts*	POMPA RISCIACQUO 50 Hz pompe rinçage 50 Hz PUMPE rinse pump 50 Hz bomba de aclarado 50 Hz	
31	41525	TUBO MANDATA RISCIACQUO TUYAU DE REFOULEMENT RINÇAGE (CRP) ZUFLUSSROHR FÜR NACHSPÜLEN (CRP) RINSE DELIVERY TUBE(CRP) TUBO IMPULSION ENJUAGUE (CRP)	
32	143268 *Recommended spare parts*	GIUNZIONE A "Y" DI RISCIACQUO JONCTION "Y" Y-STUECK JuNCTION "Y" UNION "Y"	

33	CFS25	FASCETTA T A C 25-40 W1 COLLIER T A C 25-40 SCHELLE T A C 25-40 CLAMP 25-40 W1 ABRAZADERA	
34	67180	RACCORDO LAVAGGIO RACCORD ANSCHLUSS PIPE FITTING RECOGIDA	
35	927322	FASCETTA SERRAGGIO TUBI Collier de serrage SCHLAUCHSCHELLE 12-22 HOSE CLAMP ABRAZADERA	
36	CFS18	FASCETTA SERRAGGIO TUBI Collier de serrage SCHLAUCHSCHELLE 20-32/9 HOSE CLAMP ABRAZADERA	
37	423026	FASCETTA FERMA CAVI Collier de serrage SCHELLE CABLE TIE ABRAZADERA	
50	43560	MANICOTTO INOX DURITE INOX "T" MUFFE SLEEVE INOX "T" MANGUITO INOX "T"	
51	43564	MANICOTTO MANDATA LAVAGGIO tuyau de refoulement à laver MUFFE DELIVERY WASH HOSE MANGUITO LAVADO	
55	143235 *Recommended spare parts*	TUBO 4x7 SILICONE TRASPARENTE CRP TUYAU SCHLAUCH 4X7 SILIKON DURCHS. CRP PIPE MANGUITO	
66	423011	FASCETTA SERRAGGIO TUBI A MOLLA 8.1 Collier de serrage SCHELLE, FEDER HOSE CLAMP ABRAZADERA	

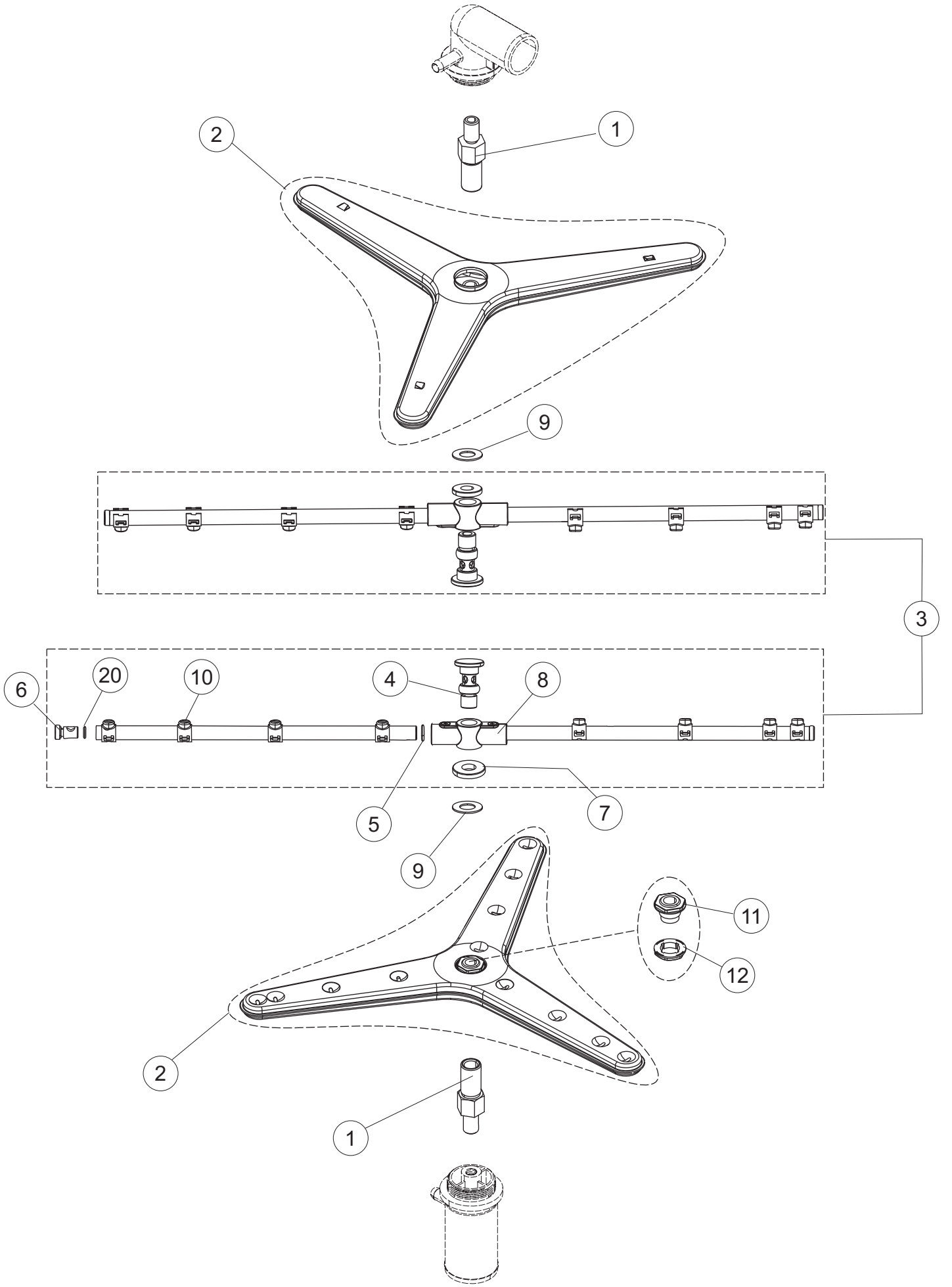
2
1
9
3
6
20
10
4
8
5
7
9
11
12
2
1

Listino componenti per pagina 6

1	67563	PERNO INFERIORE LP 2018 PIVOT DREHARMSPINDEL PIVOT PERNO	
2	67315	BRACCIO LAVAGGIO INOX LP2 CPL BRAS DE LAVAGE SPÜLLANZE - ARME WASH ARM BRAZO LAVADO	
3	42677	BRACCIO COMPLETO RISCIACQUO BRAS DE RINCAGE COMPLET KOMPLETTEN NACHSPUELUNGSARM COMPLETE RINSE ARM BRAZO ACLARADO COMPLETO	
4	80644	PERNO PIVOT ZAPFEN PIVOT PERNO	
5	456019	guarnizione o-ring joint torique o-ring O-Ring 2037 O-ring junta tórica o-ring	
6	926132	TAPPO PL.X BRACCIO DI RISC.(DWT312) EMBOUT EN PLASTIQUE POUR RAMPE DE RINC. PFROPFEN, KUNST. FÜR NACHSPÜLARM (DWT312) PLASTIC RINSE ARM CAP TAPON PL. X BRAZO DE ENJUAGUE (DWT312)	
7	80679	GHIERA M12 INOX DOUILLE RING RING NUT CONTERA VIROLA	
8	69632	CORPO BRACCIO CORPS BRAS KOERPER DES NACHSPUELARMES BODY ARM CUERPO BRAZO	
9	80622 *Recommended spare parts*	RONDELLA RONDELLE RING 22X11,5X1 WASHER ANILLO DE TEFLON 22X11,5X1	
10	140036 *Recommended spare parts*	SPRUZZO RISCIACQUO GLICEUR DÜSE RINSE JET ROCIADOR ENJUAGUE	
11	80310	SUPPORTO BRACCIO SUPPORT RAMPE DE LAVAGE GRIS (RAL7001) HALTER, SPÜLLANZE/SPÜL. (RAL7001) GREY WASH ARM HOLDER (RAL 7001) SOPORTE LANC/LAVADO (RAL7001)	
12	80314	GHIERA LANCIA LAVAGGIO DOUILLE SCHRAUBENMUTTER, SPÜLLANZE GRAU RING NUT CONTERA VIROLA	
20	456030	guarnizione o-ring joint torique o-ring O-Ring 106 (CGR106) O-ring junta tórica o-ring	

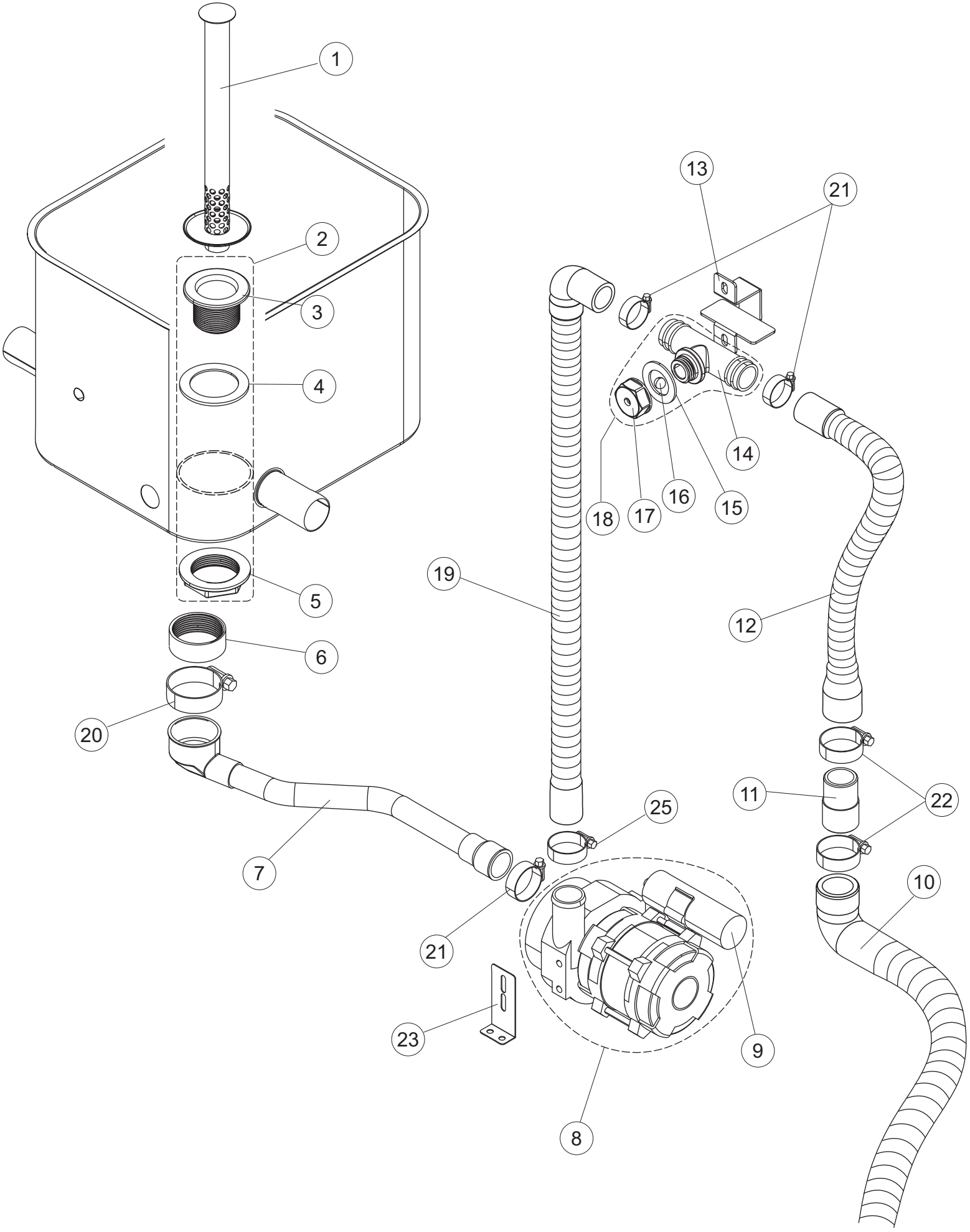
1
2
3
4
5
6
20
7
13
21
14
18
17
16
15
19
12
11
22
25
10
21
23
9
8

Listino componenti per pagina 7

1	67587	FILTRO SCARICO PARZIALE INOX LP2/3 FILTRE FILTER FILTER FILTRO	
2	K75871	KIT SOSTITUZIONE PILETTA SCARICO KIT POUR SORTIE DE VIDANGE KIT FÜR ABFLUSSAUSLASS KIT FOR DRAIN OUTLET KIT PARA SALIDA DEL DESAGÜE	
3	75871 *Recommended spare parts*	PILETTA DI SCARICO TUYAU DE DRAINAGE ablassen DRAIN CONNECTION PILETA DESCARGA	
4	75873 *Recommended spare parts*	GUARNIZIONE JOINT DICHTUNG GASKET JUNTA	
5	75872 *Recommended spare parts*	DADO PILETTA SCARICO ECROU sortie de vidange MUTTER Abflussauslass NUT WASTE DRAIN TUERCA DESCARGA DE RESIDUOS	
6	67523	RACCORDO PILETTA SCARICO RACCORD VERBINDUNGSST PIPE FITTING RECOGIDA	
7	127056	MANICOTTO DI ASPIRAZIONE POMPA MANCHON D'ASPIRATION POMPE MUFFE, ABSAUG.ABLASSPUMPE VICT.32 PUMP ASPIRATION SLEEVE MANGUITO ASP. P. S. VICT. 32	
8	K67117	POMPA SCARICO 67117+COND.4MF 50/60HZ POMPE DE VIDANGE LP 220/240 50/60HZ 144W ABLASSPUMPE LP 220/240 50/60HZ 144W DRAIN PUMP LP 220/240 50/60HZ 144W BOMBA DESAGUE LP 220/240 50/60HZ 144W	
9	67123	CONDENSATORE 4MF (POMPA 67117) CONDENSEUR 4MF (POMPA 67117) KONDENSATOR 4MF (POMPA 67117) CAPACITOR 4MF (POMPA 67117) CONDENSADOR 4MF (POMPA 67117)	
10	143252	TUBO SCARICO LA50 TUYAU DE VIDANGE ABLAUFLEITUNG DRAIN HOSE TUBO DESCARGA	
11	70167	RACCORDO SCARICO RACCORD VIDANGE ABLAUFGARNITUR DRAIN CONNECTION EMPALME SALIDA DESCARGA	
12	70110	TUBO DI SCARICO TUYAU DE VIDANGE ABFLUSSSCHLAUCH DRAIN HOSE TUBO DESCARGA	
13	80637	STAFFA SCARICO PARZIALE console de support TRAGBUEGEL support bracket ménsula de soporte	
14	144024	VALVOLA SFIATO SOUPAPE DE SOUPIRAL LUFTLOCH-VENTIL VENT VALVE VALVULA ALIVIAD. DESCARGA INT.CUBETA	
15	437083	GUARNIZIONE GOMMA D32D19.5S1.5 JOINT DICHTUNG, GUMMI D32D19.5S1.5 GASKET JUNTA	

16	476008	SFERA.VALVOLA.LA50.HOST.D=5/16" SPHERE KUGELHAHN SPHERE ESFERA	
17	468199	RACCORDO MASCHIO VALVOLA SF.E DVGW LA50 RACCORD ANSCHLUSSSTUECK LA50 PIPE FITTING RECOGIDA	
18	73576	VALVOLA SFIATO SP2 SOUPAPE DE SOUPIRAL SP2 VENTIL SP2 SP2 VENT VALVE VALVULA ALIVIAD. SP2	
19	80702	TUBO SCARICO D19 TUYAU DE VIDANGE ROHRE DRAIN HOSE TUBO DESCARGA	
20	CFS1A	FASCETTA SERRAGGIO TUBI Collier de serrage SCHELLE, SCHRAUBE TORRO W1/W2B 40-60/12 HOSE CLAMP ABRAZADERA	
21	CFS18	FASCETTA SERRAGGIO TUBI Collier de serrage SCHLAUCHSCHELLE 20-32/9 HOSE CLAMP ABRAZADERA	
22	CFS1	FASCETTA SERRAGGIO TUBI Collier de serrage SCHLAUCHSCHELLE TORRO 35-50/9 HOSE CLAMP ABRAZADERA	
23	67712	STAFFA SUPPORTO POMPA SCARICO LP.6/7 console de support BÜGEL, ABLASSPUMPE FÜR SAMMELLEITUNG support bracket ménsula de soporte	
25	CFS18	FASCETTA SERRAGGIO TUBI Collier de serrage SCHLAUCHSCHELLE 20-32/9 HOSE CLAMP ABRAZADERA	

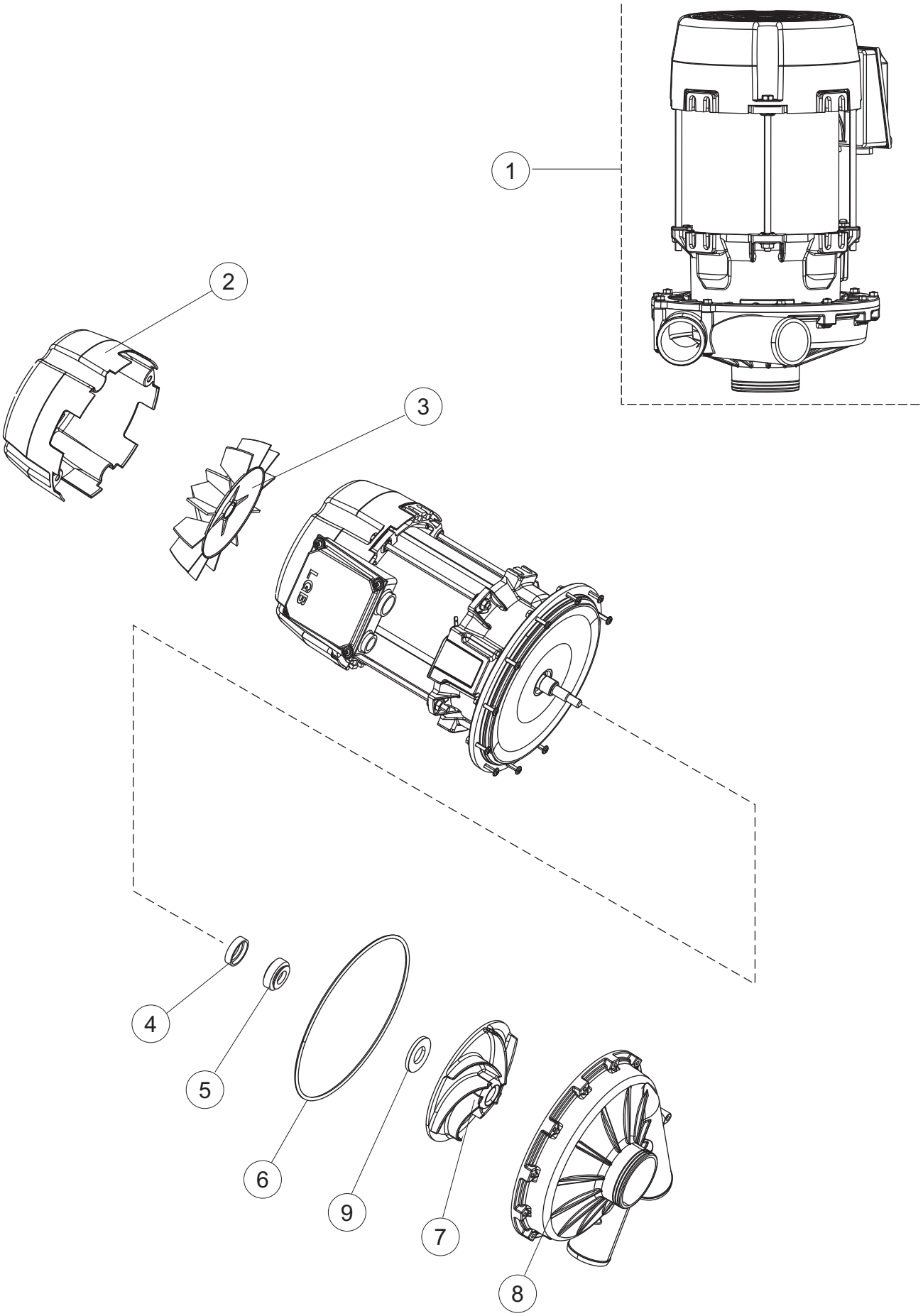
1
2
3
4
5
6
9
7
8

Listino componenti per pagina 8

1	67600	ELETTROPOMPA 2.7KW LP2/LP3(400/230V-50) MOTOPOMPE 2.7KW LP2/LP3(400/230V-50) ELEKTROPUMPE 2.7KW LP2/LP3(400/230V-50) ELECTROPUMP 2.7KW LP2/LP3(400/230V-50) ELECTROBOMBA 2.7KW LP2/LP3(400/230V-50)	
2	66456	COPRIVENTOLA MOTORE COUVRE-HELICE POUR MOTEUR LAUFRAD-DECKEL FUER MOTOR MOTOR FAN COVER CUBREVENTILADOR MOTOR	
3	66457	VENTOLA TURBINE DE REFROIDISSEMENT KUEHLUNGSFLUEGEL FAN ROTOR	
4	66452	TENUTA MECCANICA FISSA (1033R) JOINT MECANIQUE FIXE (1033R) GLEITRINGDICHTUNG FIXIERT (1033R) FIXED SHAFT SEAL (1033R) SELLO MECÁNICO FIJO (1033R)	
5	66453	TENUTA MECCANICA ROTANTE (1032R) TOURNER LA GARNITURE MÉCANIQUE (1032R) GLEITRINGDICHTUNG (1032R) ROTATING MECHANICAL SEAL(1032R) GIRATORIA DEL CIERRE MECÁNICO (1032R)	
6	66455	GUARNIZIONE CHIOCCIOLA 3877R joint torique o-ring 3877R O-Ring-Dichtung 3877R O-ring 3877R junta tórica o-ring 3877R	
7	66458	GIRANTE 3878 (POMPA 67600) IMPULSEUR 3878 (POMPA 67600) LAUFRAD 3878 (POMPA 67600) IMPELLER 3878 (POMPA 67600) ROTOR 3878 (POMPA 67600)	
8	66451	CORPO POMPA (3868R) CORPS POMPE (3868R) PUMPENGEHAEUSE (3868R) PUMP HOUSING (3868R) CUERPO BOMBA (3868R)	
9	CRI10	RONDELLA INOX RONDELLE UNTERLEGSCHEIBE, INOX D10 WASHER arandela	

RECOMMENDED SPARE PARTS

PAG	POS	COD		
1	16	80105	TAMPONE FERMO PORTA / CAPPA arrêt de porte / CAPOT Türanschlag HOOD / DOOR STOP parada de la puerta	
1	19	486078	VITE IN ACCIAIO INOSSIDABILE SPEC. 6MA VIS EN ACIER INOXYDABLE 6MAX30 T.1/2 TC SCHRAUBE TC-CE M6X40 INOX STAINLESS STEEL SCREW 6MAX30 T.1/2 TC TORNILLO TC-CE M6X40 INOX	
1	25	80871	MICRO MAGNETICO CONTACTE MAGNETIQUE TUERKONTAKTSCHALTER MAGNETIC DOOR SWITCH CONTACTO MAGNETICO	
2	3	228014	FUSIBILE 5X20 T4A FUSIBLE SICHERUNG FUSE FISIBLE	
2	11	73351	CONTATTORE CONTACTEUR KONTAKT-GEBER 230-50/60HZ CONTACTOR CONTACTOR	
2	12	73350	CONTATTORE CONTACTEUR KONTAKT-GEBER 230-50/60HZ CONTACTOR CONTACTOR	
2	16	215041-9	SCHEDA 215041+FIRMWARE34(FW_0_XXJ.Q014) CARTE ELECTRONIQUE 215041+FIRMWARE34 (FW_0_XXJ.Q01 KARTE ELEKTRONIK 215041+FIRMWARE34 (FW_0_XXJ.Q014) MAIN BOARD 215041+FIRMWARE34 (FW_0_XXJ.Q014) TARJETA electrónica 215041+FIRMWARE34 (FW_0_XXJ.Q014)	
2	20	228010	FUSIBILE 5X20 T4A RITARDATO 250V FUSIBLE SICHERUNG 5X20 T4A FUSE FISIBLE	
2	21	74933	CAVO FLAT (3200mm) CON GUAINA CABLE FLAT AVEC FOURREAU DE PROTECTION Flachbandkabel FLAT MIT HÜLLE FLAT CABLE WITH PROTECTIVE SHEATH CABLE FLAT CON VAINA	
2	22	80889	TASTIERA COMANDI touche clavier commande TASTATURPLATINE CONTROL KEYBOARD TECLADO DE COMANDOS	
2	23	417119	DADO ECROU SCHRAUBENMUTTER, M3 KUNST. WEISS NUT TUERCA	
2	24	419036	DISTANZIALI SCHEDA ENTRETOISE X CARTE ELECTRONIQUE ABSTANDSSTÜCK, M3 INTERFACE BOARD DISTANCE KEEPERS DISTANCIADOR M3	
2	51	929115	RELE 16A-230V RELAIS 16A 230V RELAIS 16A 230V 62.82 RELAY 16A 230V RELE 16A 230V	
2	52	DER111	RELE 30A 230AC 653182300300 RELAIS 30A 230AC 653182300300 RELAIS 30A 230AC 653182300300 RELAY 30A 230AC 653182300300 VER CODIGO 229029	
2	56	65911	CAVETTO COLLEGAMENTO ESPANSIONE JST CÂBLAGE ÉLECTRIQUE ELEKTROVERKABELUNG ELECTRIC WIRING CABLEADO ELÉCTRICO	
3	6	224031	PRESSOSTATO DIGITALE 560-AC-002 PRESSOSTAT DRUCKWAECHTER PRESSURE SWITCH PRESOSTATO	

RECOMMENDED SPARE PARTS

PAG	POS	COD		
3	8	143235	TUBO 4x7 SILICONE TRASPARENTE CRP TUYAU SCHLAUCH 4X7 SILIKON DURCHS. CRP PIPE MANGUITO	
PAG	**POS**	**COD**		
3	10	70600	TRAPPOLA ARIA ESTERNA cloche de pression Glocke fur druckschalter AIR TRAP for pressure switch CAMPANA PRESOSTATO	
PAG	**POS**	**COD**		
3	11	437098	GUARNIZIONE JOINT DICHTUNG FUER LUFTFALLE GASKET JUNTA	
PAG	**POS**	**COD**		
3	12	417120	DADO ECROU KUNSTSTOFFMUTTER 1-1/4 NUT TUERCA	
PAG	**POS**	**COD**		
3	14	231016	SONDA TEMPERATURA SONDE TEMPERATURSONDE TEMPERATURE PROBE SONDA TEMPERATURA (AMPOLLA ACERO)	
PAG	**POS**	**COD**		
3	19	927057	TERMOSTATO SICUREZZA THERMOSTAT THERMOSTAT, 3-KONTAKTE 90/110øC TYP LS1 THERMOSTAT TERMOSTATO 3 CONTACTOS 90/110ºC TIPO LS1	
PAG	**POS**	**COD**		
3	22	209042	DOSAT.PERIST.BRILLANTANTE+NR P/F MD DOSEUR PÉRISTALTIQUE PERISTALTISCHES DOSIERGERAET DOSING PUMP DOSIFICADOR	
PAG	**POS**	**COD**		
3	23	209043	DOSAT.PERIST.DETERGENTE P/F MD DOSEUR PÉRISTALTIQUE PERISTALTISCHES DOSIERGERAET DETERGENT DOSING PUMP DOSIFICADOR DETERG.	
PAG	**POS**	**COD**		
3	24	143261	TUBO SILICONE TUBE MEMBRANSCHLAUCH HOSE TUBITO	
PAG	**POS**	**COD**		
3	25	143258	TUBO "SANTOPRENE" CON RACCORDO TUYAU "SANTOPRENE" MEMBRANSCHLAUCH SANTOPREN "SANTOPRENE" PIPE TUBITO SANTOPRENE	
PAG	**POS**	**COD**		
3	27	143005	TUBO IN GOMMA TELATA 5X12 NERO TUYAU EN CAOUTCHOUC LIN 5X12 NOIR SCHLAUCH TP 5X11 (CASER/15/NL C4N) LINEN RUBBER PIPE 5X12 - BLACK TUBO PRES. TP 5x11 (CASER/15/NL C4N)	
PAG	**POS**	**COD**		
3	28	H.775601	TUBO 4x6 CRISTAL BLUE PVC TUYAU SCHLAUCH 4x6 CRISTAL BLAU PVC PIPE MANGUITO	
PAG	**POS**	**COD**		
3	29	143194	TUBO 4x6 CRISTAL TRASPARENTE TUYAU SCHLAUCH 4X6 CRISTAL, DURCHS. PIPE MANGUITO	
PAG	**POS**	**COD**		
5	6	224031	PRESSOSTATO DIGITALE 560-AC-002 PRESSOSTAT DRUCKWAECHTER PRESSURE SWITCH PRESOSTATO	
PAG	**POS**	**COD**		
5	12	127095	MANICOTTO BOILER MANCHON CHAUDIÈRE MUFFE BOILER PIPE MANGUITO PURGA CALDERIN	
PAG	**POS**	**COD**		
5	13	144032	SISTEMA CARICAMENTO BOILER CRP CON CAMPANA PRESSC SYSTÈME CHARGEMENT DE CHAUDIÈRE CRP AIR GAP GEOFFNETER BEHAELTER LOADING SYSTEM BOILER CRP WITH BELL PRESSURE SWITCI SISTEMA CARGA DE CALDERIN CRP	

RECOMMENDED SPARE PARTS

PAG	POS	COD		
5	16	240018	ELETTROVALVOLA ELECTROVANNE ZUFLUSSVENTIL 1-WEG CRP SOLENOID VALVE ELECTROVALVULA	
PAG	**POS**	**COD**		
5	19	231016	SONDA TEMPERATURA SONDE TEMPERATURSONDE TEMPERATURE PROBE SONDA TEMPERATURA (AMPOLLA ACERO)	
PAG	**POS**	**COD**		
5	22	927057	TERMOSTATO SICUREZZA THERMOSTAT THERMOSTAT, 3-KONTAKTE 90/110øC TYP LS1 THERMOSTAT TERMOSTATO 3 CONTACTOS 90/110ºC TIPO LS1	
PAG	**POS**	**COD**		
5	29	206013	CONDENSATORE CONDENSEUR KONDENSATOR 4 MF FÜR WASCHPUMPE CAPACITOR CONDENSADOR	
PAG	**POS**	**COD**		
5	30	80627	POMPA RISCIACQUO 50 Hz pompe rinçage 50 Hz PUMPE rinse pump 50 Hz bomba de aclarado 50 Hz	
PAG	**POS**	**COD**		
5	32	143268	GIUNZIONE A "Y" DI RISCIACQUO JONCTION "Y" Y-STUECK JuNCTION "Y" UNION "Y"	
PAG	**POS**	**COD**		
5	55	143235	TUBO 4x7 SILICONE TRASPARENTE CRP TUYAU SCHLAUCH 4X7 SILIKON DURCHS. CRP PIPE MANGUITO	
PAG	**POS**	**COD**		
6	9	80622	RONDELLA RONDELLE RING 22X11,5X1 WASHER ANILLO DE TEFLON 22X11,5X1	
PAG	**POS**	**COD**		
6	10	140036	SPRUZZO RISCIACQUO GLICEUR DÜSE RINSE JET ROCIADOR ENJUAGUE	
PAG	**POS**	**COD**		
7	3	75871	PILETTA DI SCARICO TUYAU DE DRAINAGE ablassen DRAIN CONNECTION PILETA DESCARGA	
PAG	**POS**	**COD**		
7	4	75873	GUARNIZIONE JOINT DICHTUNG GASKET JUNTA	
PAG	**POS**	**COD**		
7	5	75872	DADO PILETTA SCARICO ECROU sortie de vidange MUTTER Abflussauslass NUT WASTE DRAIN TUERCA DESCARGA DE RESIDUOS	

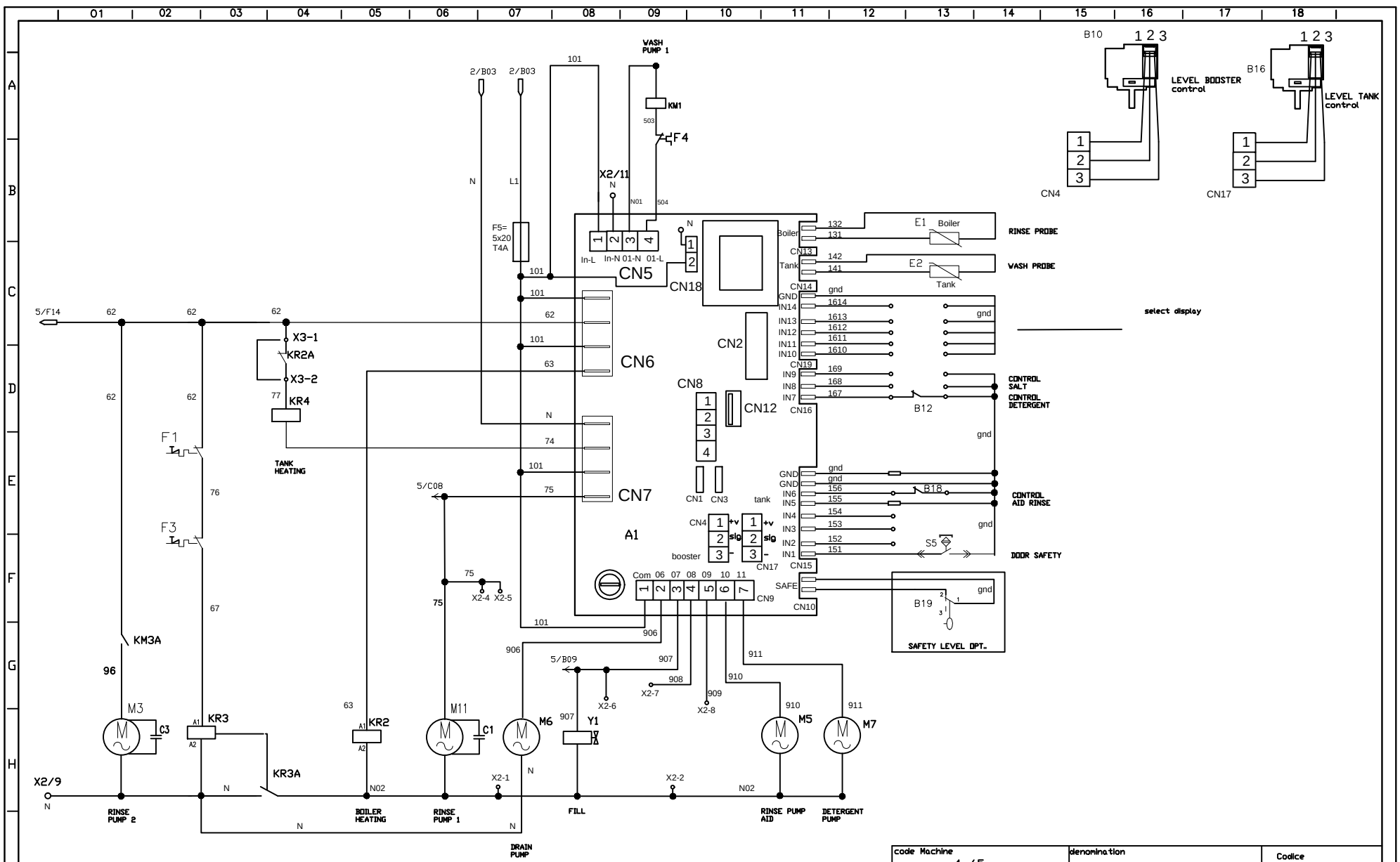

DESCRIZIONE	SOSTITUISCE	DATA
-3		
-2		

code Machine .4 /.5		denomination WIRING DIAGRAMM	Codice 82181
re-examined	data/date 05/04/18		
inspected by	date	Dishwashers	n°/file 82181 mod -4
validated by	date/date	total blat 6 / N° blat 1 / Next blat -2	

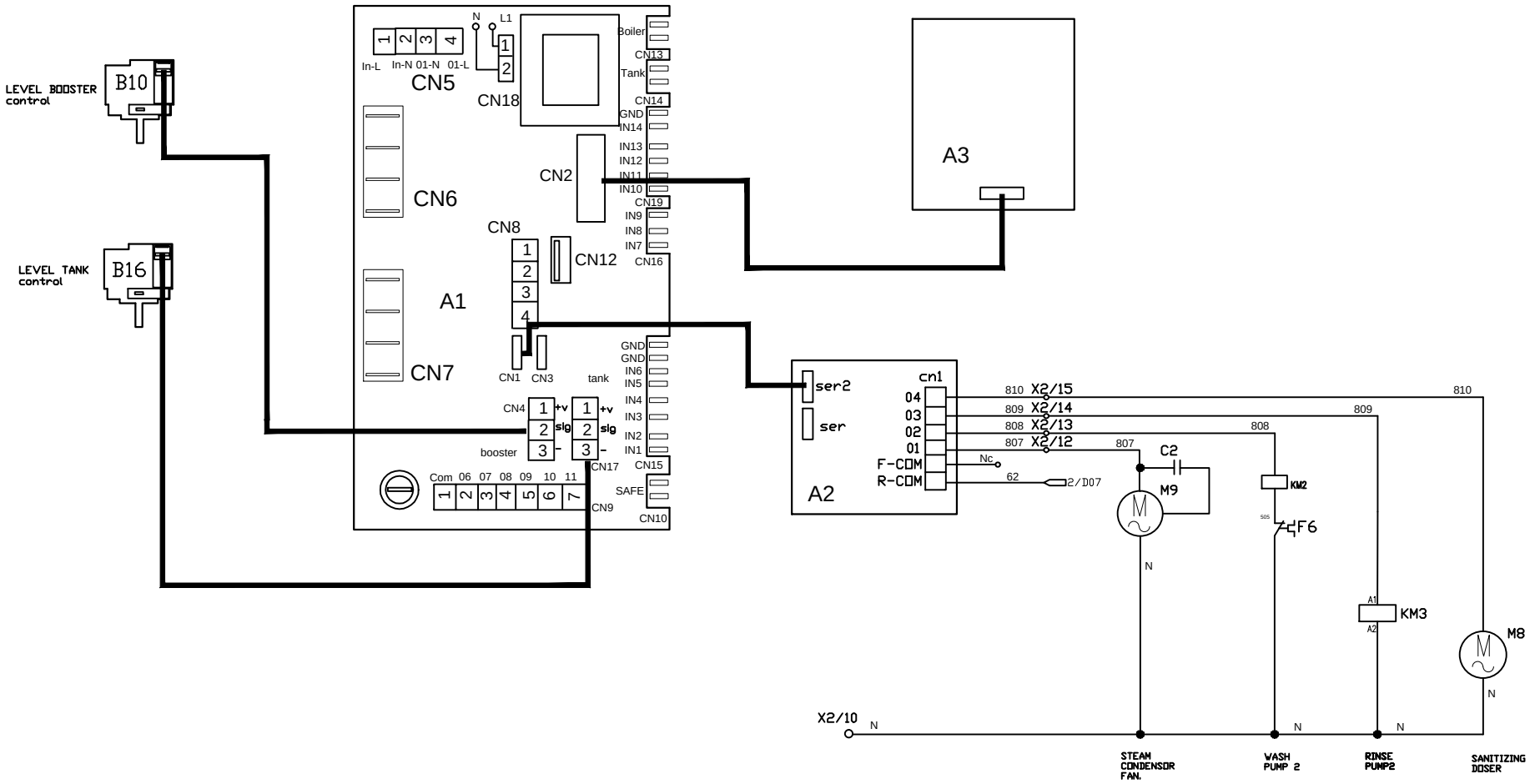

OPTIONAL

	DESCRIZIONE	SOSTITUISCE	DATA
-3			
-2			

code Machine		denomination	Codice
re-examined	data/date 05/04/18	WIRING DIAGRAMM	82181
inspected by	date	Dishwashers	n°/file 82181 mod -4
validated by	date/date	total blat 6 / N° blat 2 / Next blat -3	

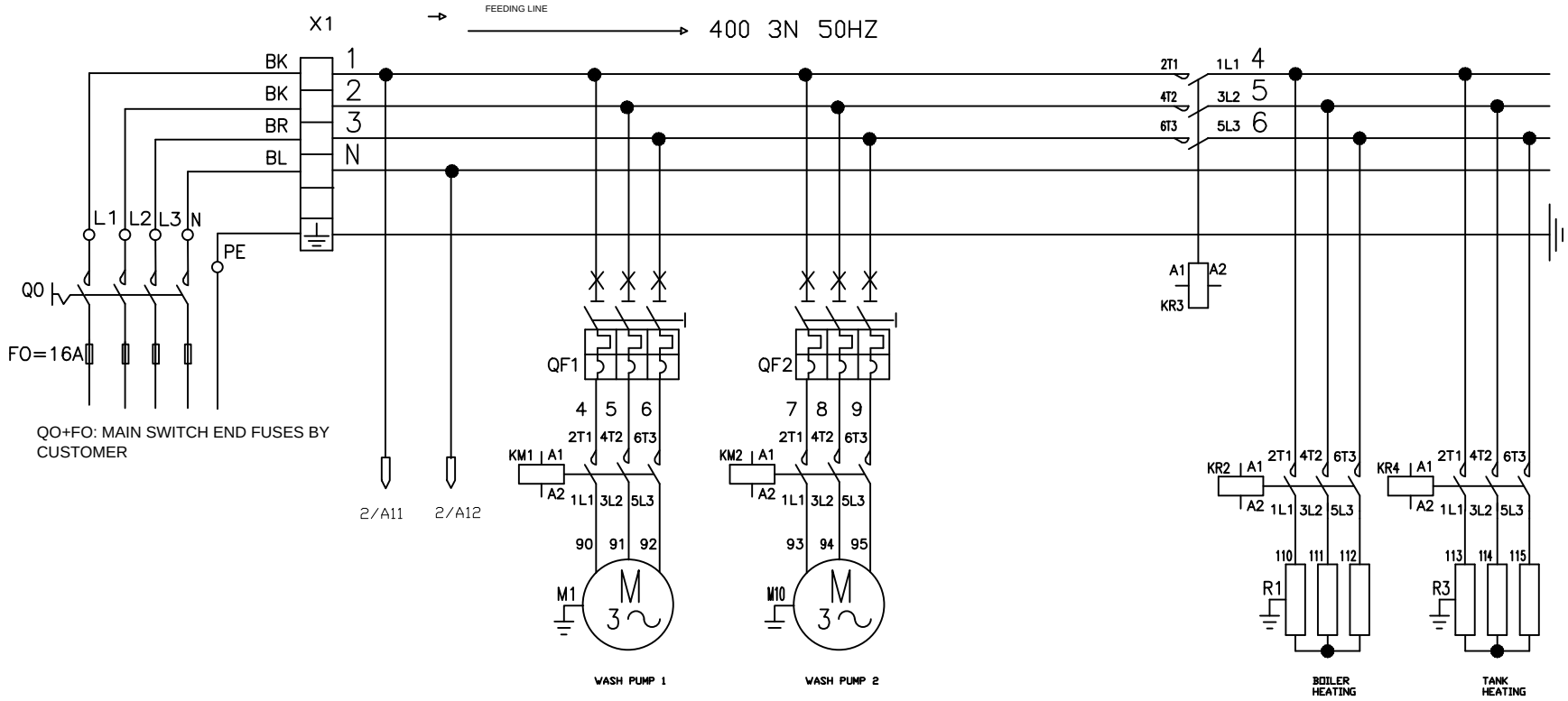

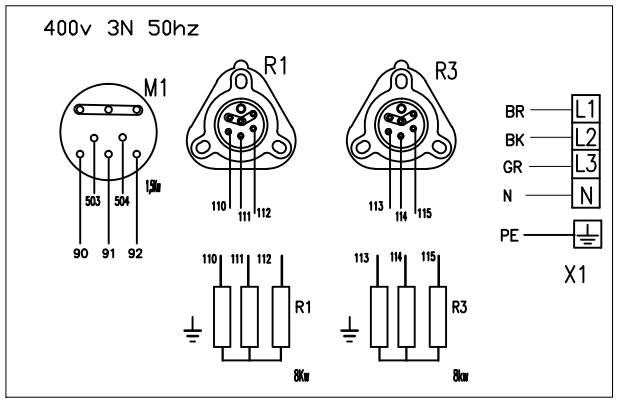

OPTIONAL

	DESCRIZIONE	SOSTITUISCE	DATA
-3			
-2			

code Machine		denomination	Codice
re-examined	data/date 05/04/18	WIRING DIAGRAMM	82181
inspected by	date	Dishwashers	n°/file 82181 mod -4
validated by	date/date	total blat 6 / N° blat 3 / Next blat -4	

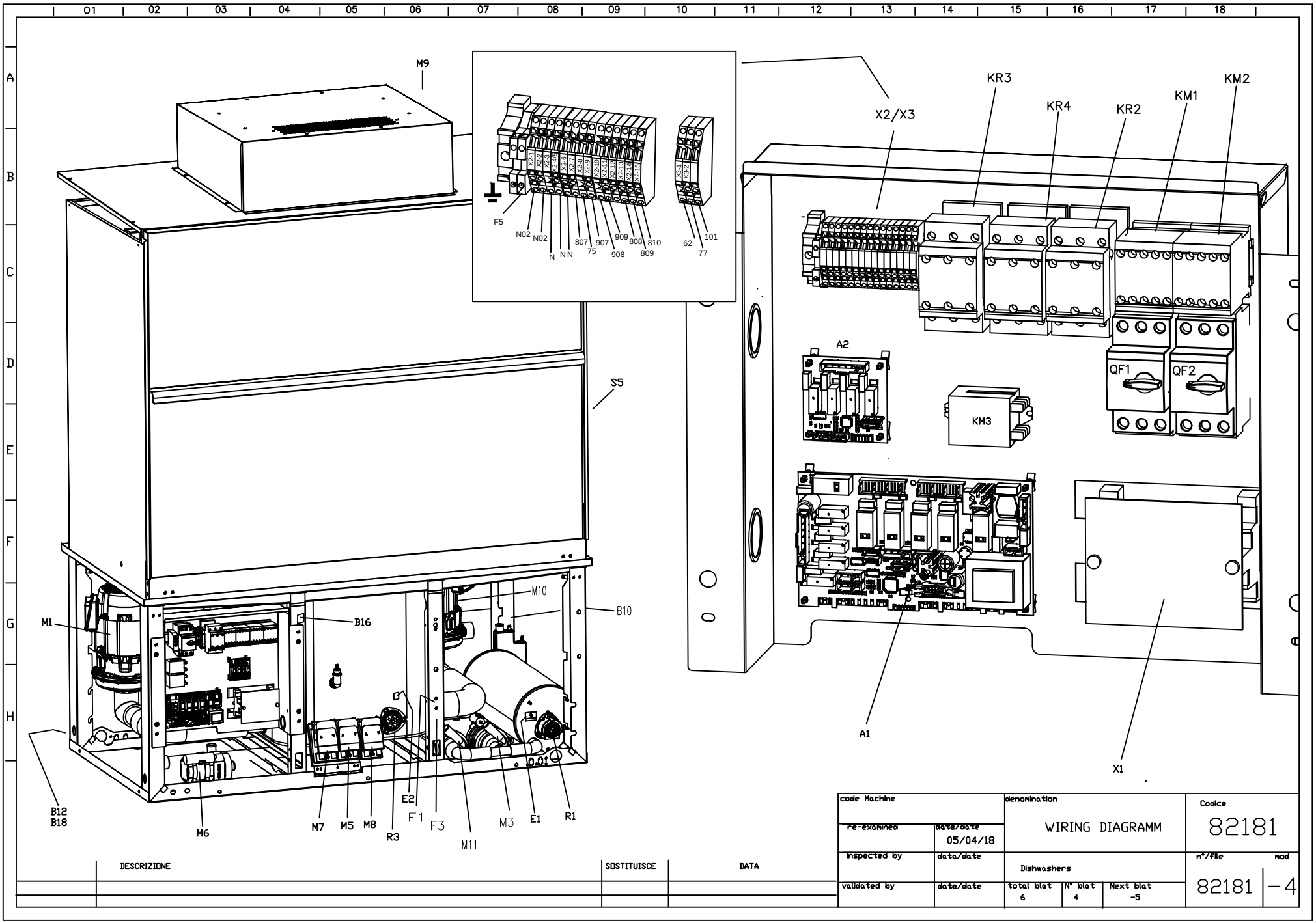

DESCRIZIONE	SOSTITUISCE	DATA

code Machine		denomination		Codice	
re-examined	date/date 05/04/18	WIRING DIAGRAMM		82181	
inspected by	data/date	Dishwashers		n°/file	mod
validated by	date/date	total blat 6	N° blat 4	Next blat -5	82181 -4

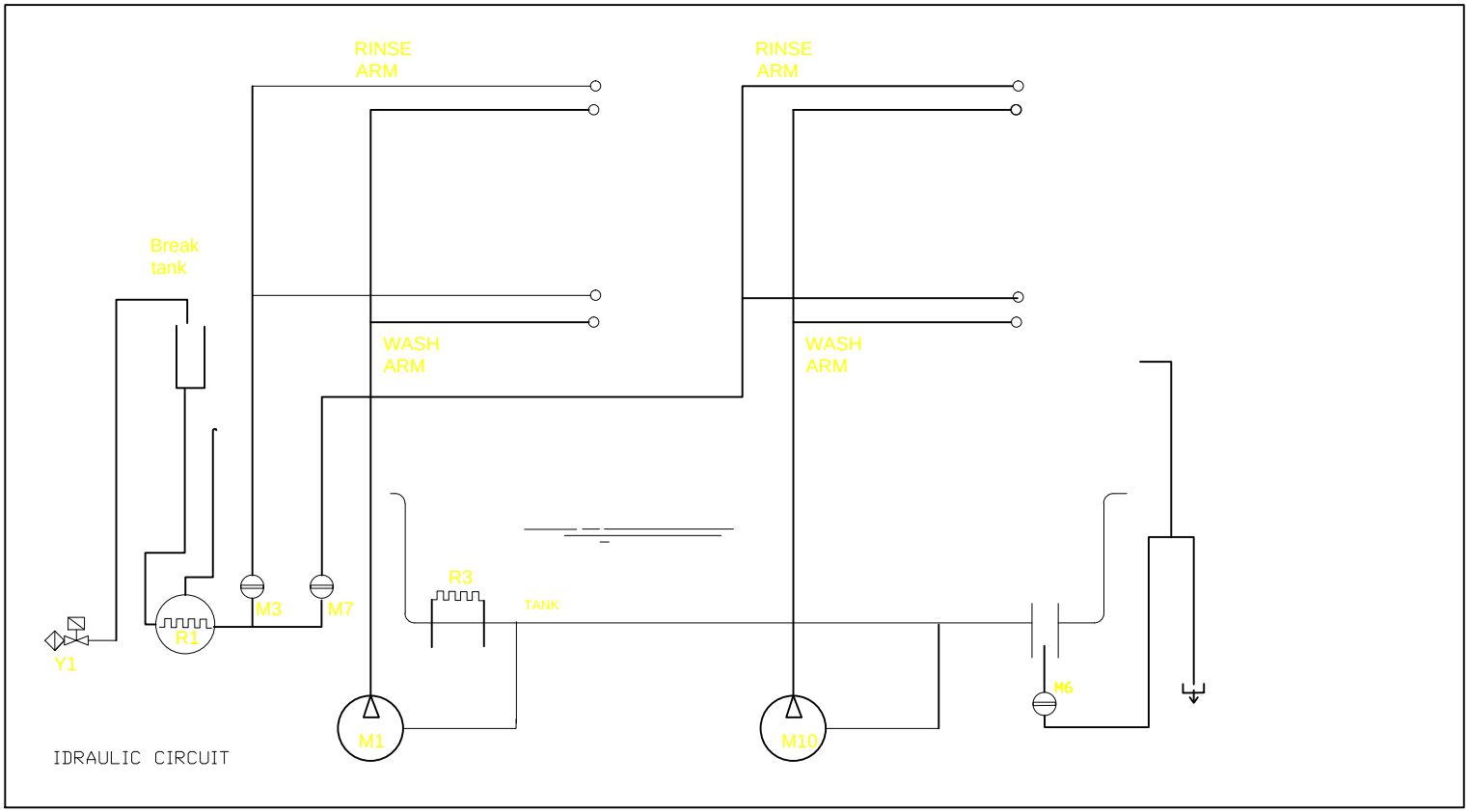

DESCRIZIONE	SOSTITUISCE	DATA

code Machine		denomination		Codice	
re-examined	date/date 05/04/18	WIRING DIAGRAMM		82181	
inspected by	data/date	Dishwashers		n°/file	mod
validated by	date/date	total blat 6	N° blat 5	Next blat -6	82181 -4

QF1/QF2	PROTEZIONE TERMICA POMPA LAVAGGIO THERMAL PROTECTION	PROTECTION THERMIQUE WARMESCHUTZ
KR3A/KR3B	CONTATTO AUSILIARIO KR3 AUXILIARY CONTACT KR3	RELAIS DE POMPE DE RINCAGE KR3 HILFSKONTAKT KR3
KR3	RELE ATTIVAZIONE POMPE RISCIAQUO RINSE PUMPS RELAY	RELAIS DE POMPE DE RINCAGE SPULPUMPENRELAIS SPULEN
M9	VENTOLA CONDENSA VAPORI STEAM CONDENSOR FAN	VENTILATEUR DE CONDENSEUR DE VAPEUR DAMPFKONDENSATORLUFTER
S5	MICROINTERRUTTORE MAGNETICO MAGNETIC SAFETY MICROSWITCH	MICROINTERRUPTEUR MAGNETIQUE MAGNETISCHER SICHERHITSSCHALTER
F1	TERMOSTATO SICUREZZA BOILER SAFETY BOOSTER HEATER THERMOSTAT	THERMOSTAT DE SICURITE DU BOYLER SICHERHEITZUNG
F3	TERMOSTATO SICUREZZA VASCA SAFETY TANK HEATER THERMOSTAT	THERMOSTAT DE SICURITE CUVE SICHERHEITS– TANKTHERMOSTAT
R3	RESISTENZA VASCA LAVAGGIO WASH TANK HEATING ELEMENT	RESISTANCE CUVE DE LAVAGE WASCHTANKHEIZUNG
R1	RESISTENZA BOILER BOOSTER HEATER HEATING ELEMENT	RESISTANCE BOYLER BOILERHEIZUNG
M5	ELETTRODOSATORE TENSIOATTIVO EL. RINSEAID INJECTOR	DOSEUR EL. PRODUIT RINCAGE NACHSPUELMITTELDOSIERGERAET
M6	ELETTROPOMPA DI SCARICO DRAIN PUMP	MOTEUR POMPE VIDANGE MOTOR LAUGENPUMPE
M3/M11	ELETTROPOMPA AUMENTO PRESSIONE RINSE BOOSTER PUMP	ELECTROPOMPE AUGMENT PRESSION DRUCKSTEIGERUNGSPUMPE
M7/M8	ELETTRODOSATORE DETERSIVO EL. DETERGENT INJECTOR	DOSEUR EL. DETERGENT SPUEL MITTELDOSIERGERAET
M1/M10	ELETTROPOMPA LAVAGGIO WASH ELECTRIC PUMP	ELECTROPOMPE LAVAGE ELEKTRISCHE UMAELZPUMPE
KR3	TELERUTTORE SICUREZZA LINEA SAFETY/LINE CONTACTOR	CONTACTEUR DE SECURITE DE LIGNE NETZSICHERHEITSSCHUTZ
KR4	TELERUTTORE RESISTENZA VASCA TANK HEATER CONTACTOR	CHASSIS DE RÉSISTANCE DE RÉSERVOIR TANK WIDERSTAND CHASSIS
KR2	TELERUTTORE RESISTENZA BOILER BOOSTER HEATER CONTACTOR	CONTACTEUR RESISTANCE BOYLER LUFTSCHUETZ F. BOILERHEITZUNG
KM1/KM2	TELERUTTORE ELETTROPOMPA LAVAGGIO WASCH PUMP CONTACTEUR	CONTACTEUR ELECTROPOMPE LAVAGE SCHUETZ F. UMWAELPUMPE
F4/F6	PROTEZIONE TERMICA ELETTROPOMPA EL. WASH PUMP THERMAL PROTECTION	PROT. THERMIQUE MOTEUR EL. POMPE THERMISHER MOTORSCHULTZ
Y1	ELETTROVALVOLA CARICAMENTO FILL SOLENOID VALVE	ELECTROVANNE DE RINCAGE MAGNETVENT FUER NACHSPUELUNG
B19	PRESSOSTATO LIVELLO DI SICUREZZA SAFETY LEVEL PRESSOSTAT	PRESSOSTAT DE NIVEAU DE SECURITE SICHERHEITSNIVEAU DRUCKSCHALTER
E2	SONDA CONTROLLO VASCA PROBE TANK HEATER	THERMOSTAT RESISTANCE CUVE THANKHEIZUNGTHERMOSTAT
E1	SONDA CONTROLLO BOILER BOOSTER HEATER THERMOSTAT	THERMOSTAT RESISTANCE BOYLER BOILERHEIZUNG
C1/C2/C3	CONDESATORE CAPACITOUR	CONDENSEUR KONDENSATOR
B10	PRESSOSTATO LIVELLO BOILER BOILER PRESSURE SWITCH	PRESSOSTAT NIVEAU SURCHAUFFER NACHSPULBOILER NIVEAUSCHALTER
B18	CONTROLLO LIVELLO BRILLANTANTE RINSE AID CONTROL LEVEL	CONTROLE NIVEAU PRODUIT DE RINCAGE STUFE GLANZMITTEL
B12	CONTROLLO LIVELLO DETERGENTE DETERGENT LEVEL	CONTROLE NIVEAU DETERGENT SPULMITTELNIVEAUSCHALTER
B16	PRESSOSTATO LIVELLO VASCA TANK PRESSURE SWITCH	PRESSOSTAT NIVEAU AIRGAP TANKDRUCKSCHALTER–NIVEAUREGLER
A1/A2/A3	SCHEDA CONTROLLO ELECTRONIC CONTROL UNIT	FICHE DE CONTROLEELECTRONIQUE ELEKTRONISCHE BEDIENUNGSKARTE
F5	FUSIBILE FUSE	FUSIBLE SICHERUNG
SIMB.	DESCRIZIONE DESCRIPTION	DESCRIPTION BESCHREIBUNG

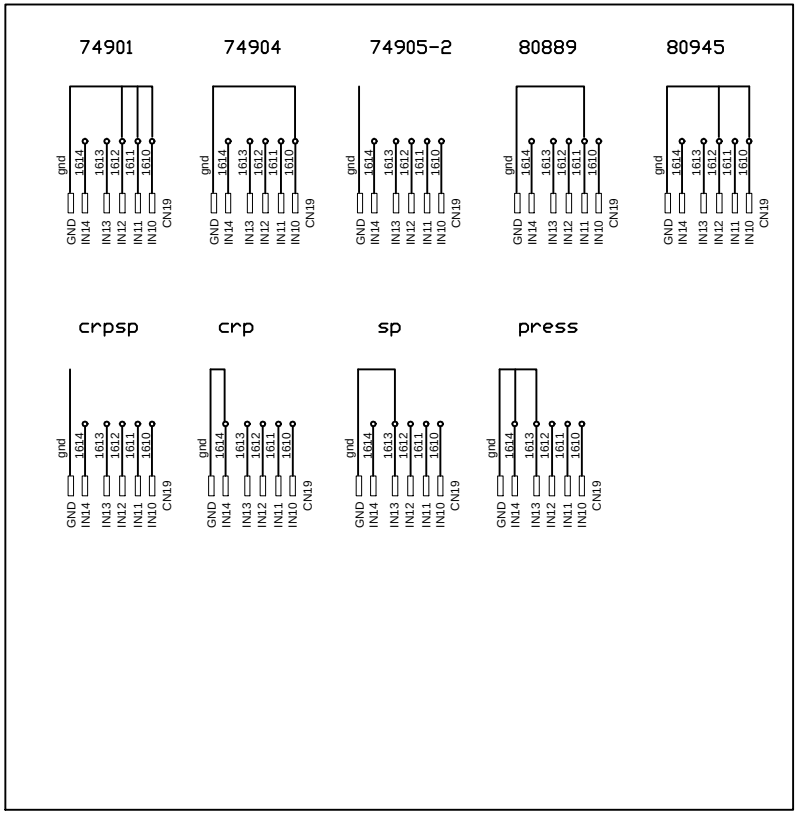

	DESCRIZIONE	SOSTITUISCE	DATA
-3			
-2			

code Machine		denomination	Code
re-examined	date 05/04/18	WIRING DIAGRAMM	82181
inspected by	date	Dishwashers	n°/file 82181 mod -4
validated by	date	total blat 6 / N° blat 6 / Next blat	