Mod./Type: **_70/... TPPCG... - _90/... TPPCG...**

EXTREME

cod./num. 2531669.00

data/date: 13/06/2014

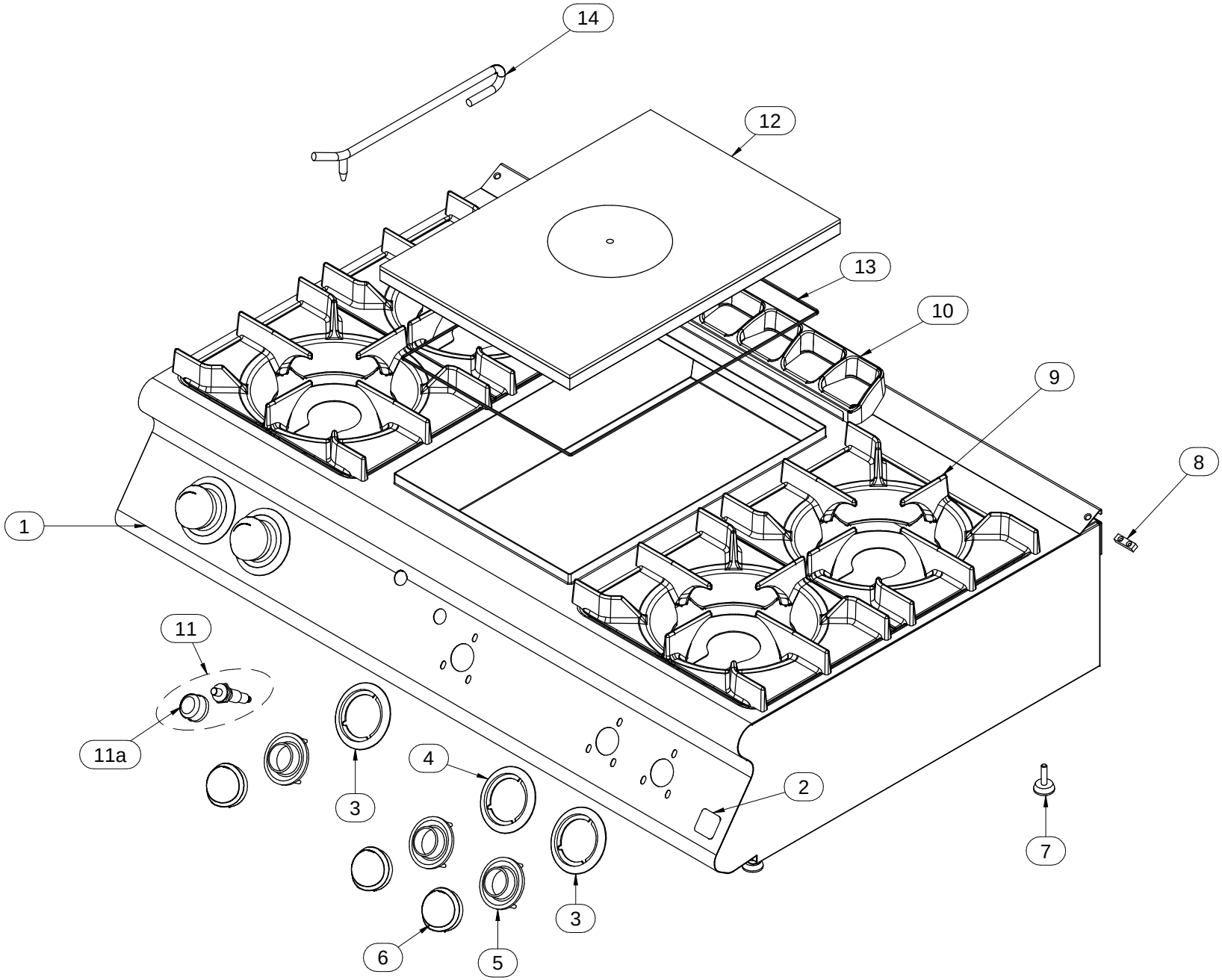

Mod./Type: **_70/... PCG - CFG - CFGE - CFGG - TP...G EXTREME**

_90/... PCG - CFG - CFGE - CFGG - TP...G EXTREME

cod./num. 2531582.00

data/date: 15/04/2014

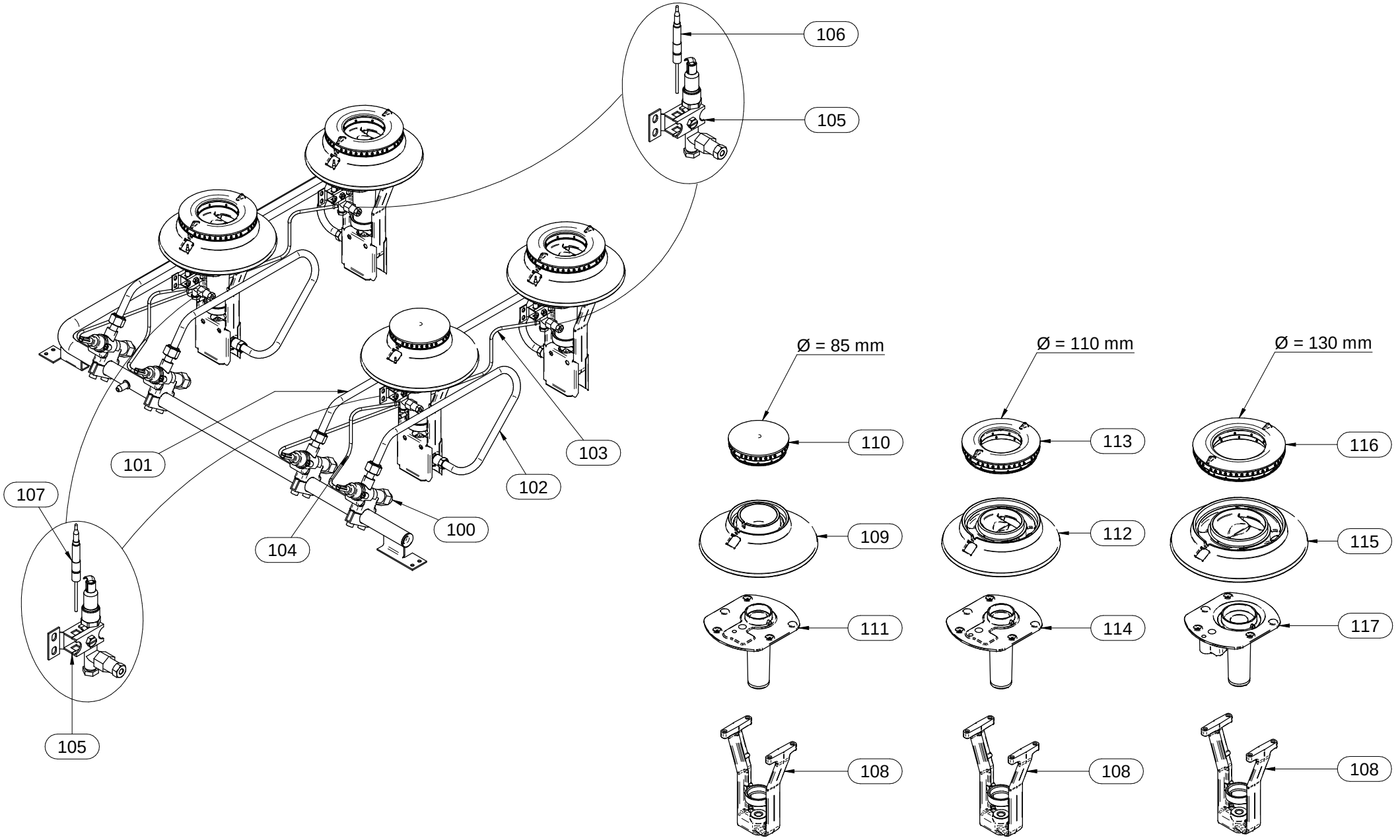

Mod./Type: **_70/40 TPG... - _70/... TP...G... EXTREME**
_90/40 TPG... - _90/... TP...G... EXTREME

cod./num. 2531667.00

data/date: 13/06/2014

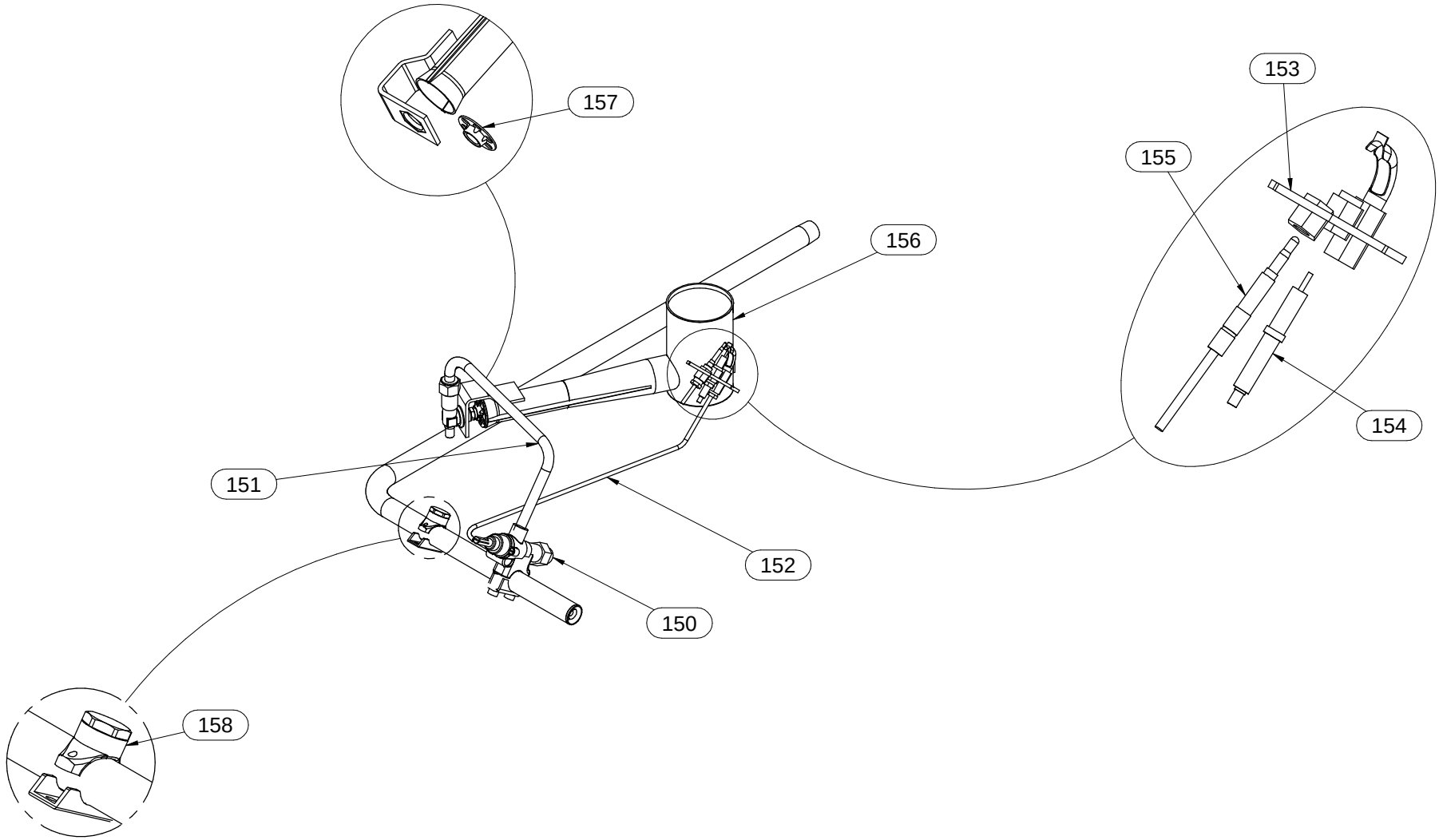

Mod./Type: **EM70 - EM90 .../40 ... - .../80 ... - .../120 ...**

EM90/160 ... VANO / CABINET

cod./num. 2531578.00

data/date: 05/06/2014

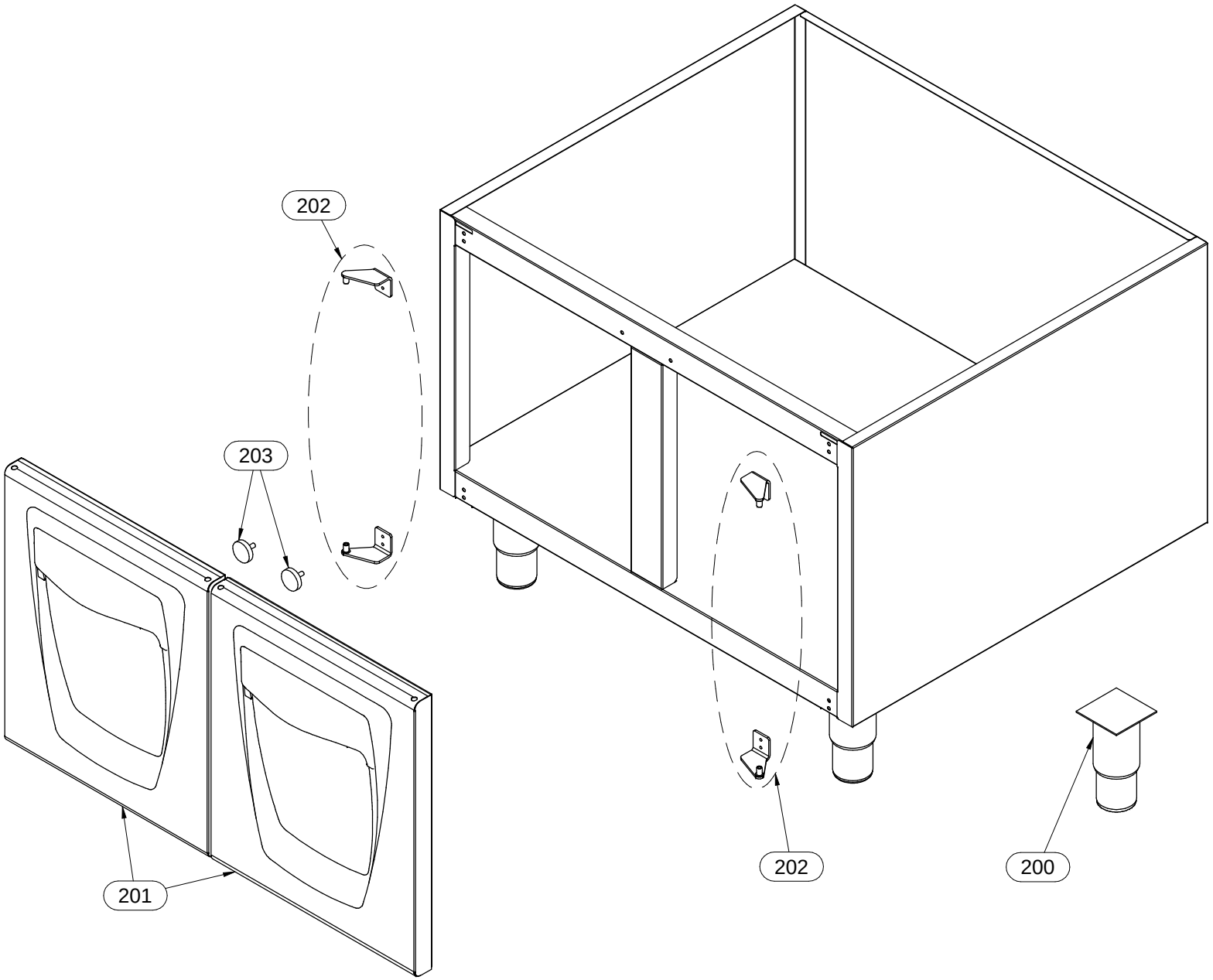

Mod.:	_70/... TPPCG... - _90/… TPPCG… EXTREME			cod. / num. 2531670.00 data / date 06/06/2014 rif. / ref. 2531669.00		EM70/80 TPPCG…	EM70/120 TPPCG2…	EM90/80 TPPCG…	EM90/120 TPPCG2…	NOTE	
POS.	DESCRIZIONE	DESCRIPTION	DENOMINATION	BENENNUNG	COD.	Q. ty					
1	CRUSCOTTO	CONTROL PANEL	BANDEAU	BEDIENBLENDE	9111341.00	1		1			
					9111384.00		1		1		
2	MARCHIO	BRAND NAME	MARQUE	MARKENZEICHEN	982.021.00	1	1	1	1	**FROM: 15.12.2011**	**TO: 31.01.2014**
					982.023.00	1	1	1	1	**FROM: 01.02.2014**	**TO:…**
3	SERIGRAFIA	SCREEN PRINT	SÉRIGRAPHIE	SIEBDRUCK	910.163.00	2	3	2	3		
4	SERIGRAFIA	SCREEN PRINT	SÉRIGRAPHIE	SIEBDRUCK	910.164.00	1	2	1	2		
5	LABIRINTO	LABYRINTH	LABYRINTHE	LABYRINTH	256.235.00	3	5	3	5		
6	MANOPOLA	KNOB	BOUTON	DREHKNOPF	256.217.00	3	5	3	5		
7	PIEDINO	FOOT	PIED	STELLFUSS	951.050.00	4	4	4	4	SOLO VERSIONE (-T)	ONLY (-T) VERSION
8	PIASTRINA GIUNZIONE	FIXING PLATE	PLAQUETTE FIXAGE	BEFESTIGUNGSPLATTE	941.130.00	1	1	1	1		
9	GRIGLIA	GRID	GRILLE	ROST	681.059.00	2	4				
					981.071.00			2	4		
10	GRIGLIA CAMINO	FLUE GRIDDLE	GRILLE POUR CHEMINÉE	KAMINROST	982.013.00	1	1	1	1		
11	ACCENDITORE PIEZO	PIEZO LIGHTER	ALLUMEUR PIEZO	PIEZOZÜNDER	912.091.00	1	1	1	1		
11a	CAPPUCCIO	CAP	CAPUCHON	KAPPE	951.047.00	1	1	1	1		
12	PIASTRA	SOLID TOP	PLAQUE COUP DE FEU	KOCHFELD	681.085.00	1	1				
					981.085.00			1	1		
13	GUARNIZIONE	WASHER	GUARNITURE	DICHTUNGSRING	953.004.00	2	2	2,5	2,5	U. M. metri	U. M. meters
14	GANCIO	HOOK	CROC	HAKEN	683.028.00	1	1	1	1		
15											
16											
17											
18											
19											
20											
21											
22											
23											
24											
25											
26											
27											
28											
29											
30											
31											

Mod.:	_70/... PCG - CFG - CFGG - CFGE - TP...G _90/... PCG - CFG - CFGG - CFGE - TP...G EXTREME			cod. / num. 2531583.00 data / date 15/04/2014 rif. / ref. 2531582.00		_70/40 PCG...	_70/80 PCG... - ...CFG...	_70/120 PCG... - ...CFG...	_90/40 PCG...	_90/80 PCG... - ...CFG...	_90/120 PCG... - ...CFG...	_90/160 PCG... - ...CFG....	_70/80 TPPCG... - ...TPPFG	_70/120 TPPCG2... - ...TPPCFG2	_90/80 TPPCG..- ...TPPFG	_90/120 TPPCG2... - ...TPPCFG2	NOTE
POS.	DESCRIZIONE	DESCRIPTION	DENOMINATION	BENENNUNG	COD.	Q. ty											
100	RUBINETTO GAS	GAS TAP	ROBINET GAZ	GASHAHN	671.088.00	2	4	6	2	4	6	8	2	4	2	4	
101	TUBO GAS	GAS PIPE	TUBE GAZ	GASROHR	256.219.00	1	2	3					1	2			
					256.250.00				1	2	3	4			1	2	
102	TUBO GAS	GAS PIPE	TUBE GAZ	GASROHR	256.220.00	1	2	3					1	2			
					256.251.00				1	2	3	4			1	2	
103	TUBO GAS	GAS PIPE	TUBE GAZ	GASROHR	256.221.00	1	2	3					1	2			
					256.252.00				1	2	3	4			1	2	
104	TUBO GAS	GAS PIPE	TUBE GAZ	GASROHR	256.222.00	1	2	3					1	2			
					256.253.00				1	2	3	4			1	2	
105	GRUPPO PILOTA	PILOT GROUP	GROUPE VEILLEUSE	ZÜNDBRENNER GRUPPE	972.021.00	2	4	6	2	4	6	8	2	4	2	4	
106	TERMOCOPPIA POSTERIORE	REAR THERMOCOUPLE	THERMOCOUPLE POSTERIEURE	HINTERES THERMOELEMENT	672.099.00	1	2	3	1	2	3	4	1	2	1	2	
107	TERMOCOPPIA ANTERIORE	FRONT THERMOCOUPLE	THERMOCOUPLE ANTERIEURE	VORDERES THERMOELEMENT	672.025.00	1	2	3	1	2	3	4	1	2	1	2	
108	PORTAUGELLO	NOZZLE HOLDER	PORTE-INJECTEUR	SPRITZDÜSE-TRÄGER	982.020.00	2	4	6	2	4	6	8	2	4	2	4	
109	BRUCIATORE 3,5kW	BURNER 3,5kW	BRULEUR 3,5kW	BRENNER 3,5kW	972.018.00	1	1	1	-	-	-	-	-	1	-	-	
110	SPARTIFIAMMA	FLAMESPREADER	CHAPEAU BRULEUR	FLAMMENTEILER	972.022.00	1	1	1	-	-	-	-	-	1	-	-	
111	SUPPORTO BRUCIATORE	SUPPORT FOR BURNER	SUPPORT BRÛLEUR	TRÄGER FÜR BRENNER	982.017.00	1	1	1	-	-	-	-	-	1	-	-	
112	BRUCIATORE 6kW	BURNER 6kW	BRULEUR 6kW	BRENNER 6kW	972.019.00	1	3	5	1	1	2	2	2	3	1	1	
113	SPARTIFIAMMA	FLAMESPREADER	CHAPEAU BRULEUR	FLAMMENTEILER	972.023.00	1	3	5	1	1	2	2	2	3	1	1	
114	SUPPORTO BRUCIATORE	SUPPORT FOR BURNER	SUPPORT BRÛLEUR	TRÄGER FÜR BRENNER	982.018.00	1	3	5	1	1	2	2	2	3	1	1	
115	BRUCIATORE 10kW	BURNER 10kW	BRULEUR 10kW	BRENNER 10kW	972.020.00	-	-	-	1	3	4	6	-	-	1	3	
116	SPARTIFIAMMA	FLAMESPREADER	CHAPEAU BRULEUR	FLAMMENTEILER	972.024.00	-	-	-	1	3	4	6	-	-	1	3	
117	SUPPORTO BRUCIATORE	SUPPORT FOR BURNER	SUPPORT BRÛLEUR	TRÄGER FÜR BRENNER	982.011.00	-	-	-	1	3	4	6	-	-	1	3	
118																	
119																	
120																	
121																	
122																	
123																	
124																	
125																	
126																	
127																	
128																	
129																	
130																	
131																	
132																	
133																	
134																	
135																	
136																	
137																	
138																	
139																	
140																	

Mod.:	_70/40 TPG... - _70/… TP...G... - _90/... TP...G… EXTREME			cod. / num. 2531668.00 data / date 12/06/2014 rif. / ref. 2531667.00		_70/40 TPG...	_70/... TP...G...	_90/... TP...G...	NOTE
POS.	DESCRIZIONE	DESCRIPTION	DENOMINATION	BENENNUNG	COD.	Q.ty			
150	RUBINETTO GAS	GAS TAP	ROBINET GAZ	GASHAHN	671.088.00	1	1	1	
151	TUBO GAS	GAS PIPE	TUYAU DE GAZ	GASLEITUNG	256.232.00	1	1		
					256.278.00			1	
152	TUBO GAS	GAS PIPE	TUYAU DE GAZ	GASLEITUNG	256.233.00	1	1		
					256.279.00			1	
153	GRUPPO PILOTA	PILOT GROUP	GROUPE VEILLEUSE	ZÜNDBRENNER GRUPPE	672.173.00	1	1	1	
154	CANDELA ACCENSIONE	IGNITION ELECTRODE	BOUGIE D'ALLUMAGE	KERZE SCHNELLBRENNER	256.060.00	1	1	1	
155	TERMOCOPPIA	THERMOCOUPLE	THERMOCOUPLE	THERMOELEMENT	672.025.00	1	1	1	
156	BRUCIATORE	BURNER	BRULEUR	BRENNER	972.044.00	1	1	1	
157	AERATORE	AERATOR	AÉRATEUR	LÜFTER	941.124.00	1	1	1	
158	TAPPO	PLUG	BOUCHON	STOPFEN	671.090.00	1	1	1	
159									
160									
161									
162									
163									
164									
165									
166									
167									
168									
169									
170									
171									
172									
173									
174									
175									
176									
177									
178									
179									
180									
181									
182									
183									
184									

Mod.:	EM70/... - EM90/… VANO / CABINET			cod. / num. 2531579.00 data / date 05/06/2014 rif. / ref. 2531578.00		EM70/40 ...	EM70/80 ...	EM70/120 ...	EM90/40 ...	EM90/80 ...	EM90/120 ...	EM90/160 ...	NOTE	
POS.	DESCRIZIONE	DESCRIPTION	DENOMINATION	BENENNUNG	COD.	Q. ty								
200	PIEDINO	FOOT	PIED	STELLFUSS	912.090.00	4	4	4	4	4	4	6	FROM: 15.12.2011	TO: 17.05.2013
					912.090.14	4	4	4	4	4	4	6	FROM: 18.05.2013	TO:...
201	PORTA	DOOR	PORTE	TÜR	256.215.00	1	2	3	1	2	3	4		
202	COPPIA CERNIERE	GASKETS PAIR	COUPLE CHARNIÈRES	SCHARNIERPAAR	256.216.00	1	2	3	1	2	3	4		
203	MAGNETE	MAGNET	MAGNÉTO	MAGNET	684.007.00	1	2	3	1	2	3	4	FROM: 15.12.2011	TO: 01.01.2014
					984.006.00	1	2	3	1	2	3	4	FROM: 02.01.2014	TO:...
204														
205														
206														
207														
208														
209														
210														
211														
212														
213														
214														
215														
216														
217														
218														
219														
220														
221														
222														
223														
224														
225														
226														
227														
228														
229														
230														
231														
232														
233														
234														