DESPIECE TECNICO

# Marmitas a Gas Baño Maria
# Gas Indirect Heating Boiling Pans
# Marmites à Gaz Bain Marie
# Gas Kochkessel
# Pentole a Gas Bagno Maria

## Gama 900

## Modelos:

## MG9-10 BM // MG9-15 BM

***Junio 2001 June***

FAGOR

Fagor Industrial

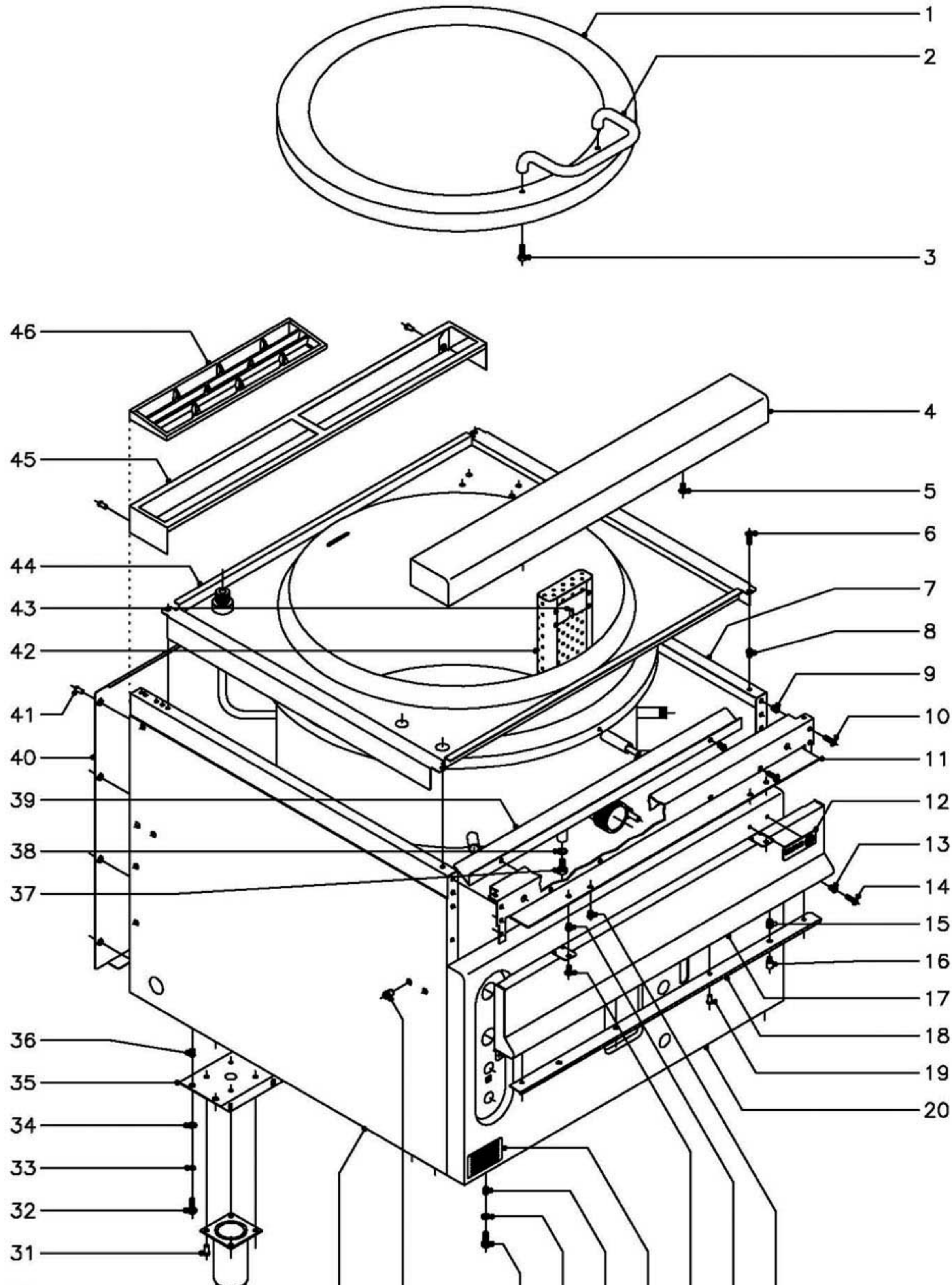


| N plano | Firma | Fecha | Aparato | Lamina | |
|---|---|---|---|---|---|
| C-1059 | | 6-2001 | MUEBLE<br>MARMITAS MG9-10BM, MG9-15BM | 1 | Fagor Industrial S.Coop. FAGOR<br>Oñate |

| MOD. | MARMITAS | ZONA | MUEBLE | PLANO | C-1059 |
|---|---|---|---|---|---|

| ITEM | CODIGO | DENOMINACION | TEXTO | MG9-10 BM | MG9-15 BM | MG9-10 BM S | MG9-15 BM S | | | | | | NOTAS |
|---|---|---|---|---|---|---|---|---|---|---|---|---|---|
| 1 | S036141 | Tapa | | 1 | 1 | 1 | 1 | | | | | | |
| 2 | S036123 | Asa de tapa | | 1 | 1 | 1 | 1 | | | | | | |
| 3 | Q012053 | Tornillo exagonal M-8x20 | | 2 | 2 | 2 | 2 | | | | | | |
| 4 | R165431 | Anterior de mesa | | 1 | 1 | 1 | 1 | | | | | | |
| 5 | Q152004 | Tornillo aplastado M-5x13 | | 2 | 2 | 2 | 2 | | | | | | |
| 6 | Q152004 | Tornillo aplastado M-5x13 | | 4 | 4 | 4 | 4 | | | | | | |
| 7 | X162811 | Panel lateral derecho | | 1 | 1 | - | - | | | | | | |
| 7 | X192805 | Panel lateral derecho | | - | - | 1 | - | | | | | | |
| 7 | S372812 | Panel lateral derecho | | - | - | - | 1 | | | | | | |
| 8 | Q221342 | Remache exagonal M-5 | | 4 | 4 | 4 | 4 | | | | | | |
| 9 | Q221342 | Remache exagonal M-5 | | 6 | 6 | 6 | 6 | | | | | | |
| 10 | Q152004 | Tornillo aplastado M-5x13 | | 6 | 6 | 6 | 6 | | | | | | |
| 11 | R162613 | Escuadra amarre anterior mesa | | 1 | 1 | 1 | 1 | | | | | | |
| 12 | U262806 | Escudo FAGOR | | 1 | 1 | 1 | 1 | | | | | | |
| | Q221023 | Clips sujecion escudo | | 2 | 2 | 2 | 2 | | | | | | |
| 13 | Q221342 | Remache exagonal M-5 | | 2 | 2 | 2 | 2 | | | | | | |
| 14 | Q152004 | Tornillo aplastado M-5x13 | | 2 | 2 | 2 | 2 | | | | | | |
| 15 | Q221343 | Remache exagonal M-6 | | 1 | 1 | 1 | 1 | | | | | | |
| 16 | Q151336 | Tornillo soporte guia | | 1 | 1 | 1 | 1 | | | | | | |
| 17 | S032806 | Panel portamandos | | 1 | 1 | 1 | 1 | | | | | | |
| 18 | S032807 | Protector | | 1 | 1 | 1 | 1 | | | | | | |
| 19 | Q419005 | Remache tubular Ø4x8 | | 4 | 4 | 4 | 4 | | | | | | |
| 20 | S022801 | Panel frontal | | 1 | - | - | - | | | | | | |
| 20 | S042805 | Panel frontal | | - | 1 | - | 1 | | | | | | |
| 20 | S072805 | Panel frontal | | - | - | 1 | - | | | | | | |
| 21 | Q221342 | Remache exagonal M-5 | | 2 | 2 | 2 | 2 | | | | | | |
| 22 | Q221342 | Remache exagonal M-5 | | 2 | 2 | 2 | 2 | | | | | | |
| 23 | Q152004 | Tornillo aplastado M-5x13 | | 2 | 2 | 2 | 2 | | | | | | |
| 24 | S326540 | Papel polyester 65x118 | | 1 | 1 | 1 | 1 | | | | | | Placa matricula |

| MOD. | MARMITAS | ZONA | MUEBLE | PLANO | C-1059 |
|---|---|---|---|---|---|

| ITEM | CODIGO | DENOMINACION | TEXTO | MG9-10 BM | MG9-15 BM | MG9-10 BM S | MG9-15 BM S | | | | | | NOTAS |
|---|---|---|---|---|---|---|---|---|---|---|---|---|---|
| 25 | Q221343 | Remache exagonal M-6 | | 2 | 2 | 2 | 2 | | | | | | |
| 26 | Q302022 | Arandela plana Ø16xØ6x1,2 | | 2 | 2 | 2 | 2 | | | | | | |
| 27 | Q012042 | Tornillo exagonal M-6x15 | | 2 | 2 | 2 | 2 | | | | | | |
| 28 | Q221343 | Remache exagonal M-6 | | 14 | 14 | 14 | 14 | | | | | | |
| 29 | X162810 | Panel lateral izquierdo | | 1 | 1 | - | - | | | | | | |
| 29 | X192803 | Panel lateral izquierdo | | - | - | 1 | - | | | | | | |
| 29 | S372810 | Panel lateral izquierdo | | - | - | - | 1 | | | | | | |
| 30 | X260150 | Pata regulable | | 4 | 4 | - | - | | | | | | |
| 31 | Q411304 | Remache avibulb Ø4,8 | | 16 | 16 | - | - | | | | | | |
| 32 | Q012042 | Tornillo exagonal M-6x15 | | 8 | 8 | - | - | | | | | | |
| 33 | Q162040 | Arandela muelle A-6 | | 8 | 8 | - | - | | | | | | |
| 34 | Q302022 | Arandela plana Ø16xØ6x1,2 | | 8 | 8 | - | - | | | | | | |
| 35 | S032631 | Liston soporte patas | | 2 | 2 | - | - | | | | | | |
| 36 | Q221343 | Remache exagonal M-6 | | 8 | 8 | - | - | | | | | | |
| 37 | Q012063 | Tornillo exagonal M-10x20 | | 1 | 1 | 1 | 1 | | | | | | |
| 38 | Q304003 | Arandela de cobre Ø18xØ10,5x2 | | 1 | 1 | 1 | 1 | | | | | | |
| 39 | S032645 | Escuadra aislante calor | | 1 | 1 | 1 | 1 | | | | | | |
| | Q221342 | Remache exagonal M-5 | | 2 | 2 | 2 | 2 | | | | | | |
| | Q152004 | Tornillo aplastado M-5x13 | | 2 | 2 | 2 | 2 | | | | | | |
| 40 | U562853 | Panel posterior | | 1 | 1 | - | - | | | | | | |
| 40 | X242817 | Panel posterior | | - | - | 1 | - | | | | | | |
| 40 | S372816 | Panel posterior | | - | - | - | 1 | | | | | | |
| 41 | Q419005 | Remache tubular Ø4x8 | | 8 | 8 | 8 | 8 | | | | | | |
| 42 | S016145 | Filtro de cuba | | 1 | - | 1 | - | | | | | | |
| 42 | S036145 | Filtro de cuba | | - | 1 | - | 1 | | | | | | |
| 43 | S036117 | Soporte filtro | | 2 | 2 | 2 | 2 | | | | | | |
| | Q412000 | Remache tubular Ø4x8 | | 8 | 8 | 8 | 8 | | | | | | |
| 44 | S026150 | Cuba de 100 l. | | 1 | - | 1 | - | | | | | | |
| 44 | S046150 | Cuba de 150 l. | | - | 1 | - | 1 | | | | | | |

| MOD. | MARMITAS | ZONA | MUEBLE | PLANO | C-1059 |
|---|---|---|---|---|---|

| ITEM | CODIGO | DENOMINACION | TEXTO | MG9-10 BM | MG9-15 BM | MG9-10 BM S | MG9-15 BM S | | | | | | NOTAS |
|---|---|---|---|---|---|---|---|---|---|---|---|---|---|
| 45 | R205428 | Soporte embellecedor 1 M. | | 1 | 1 | 1 | 1 | | | | | | |
| | Q419005 | Remache tubular Ø4x8 | | 2 | 2 | 2 | 2 | | | | | | |
| 46 | R205425 | Embellecedor chimenea | | 2 | 2 | 2 | 2 | | | | | | |
| | | | | | | | | | | | | | |
| | | | | | | | | | | | | | |
| | | | | | | |

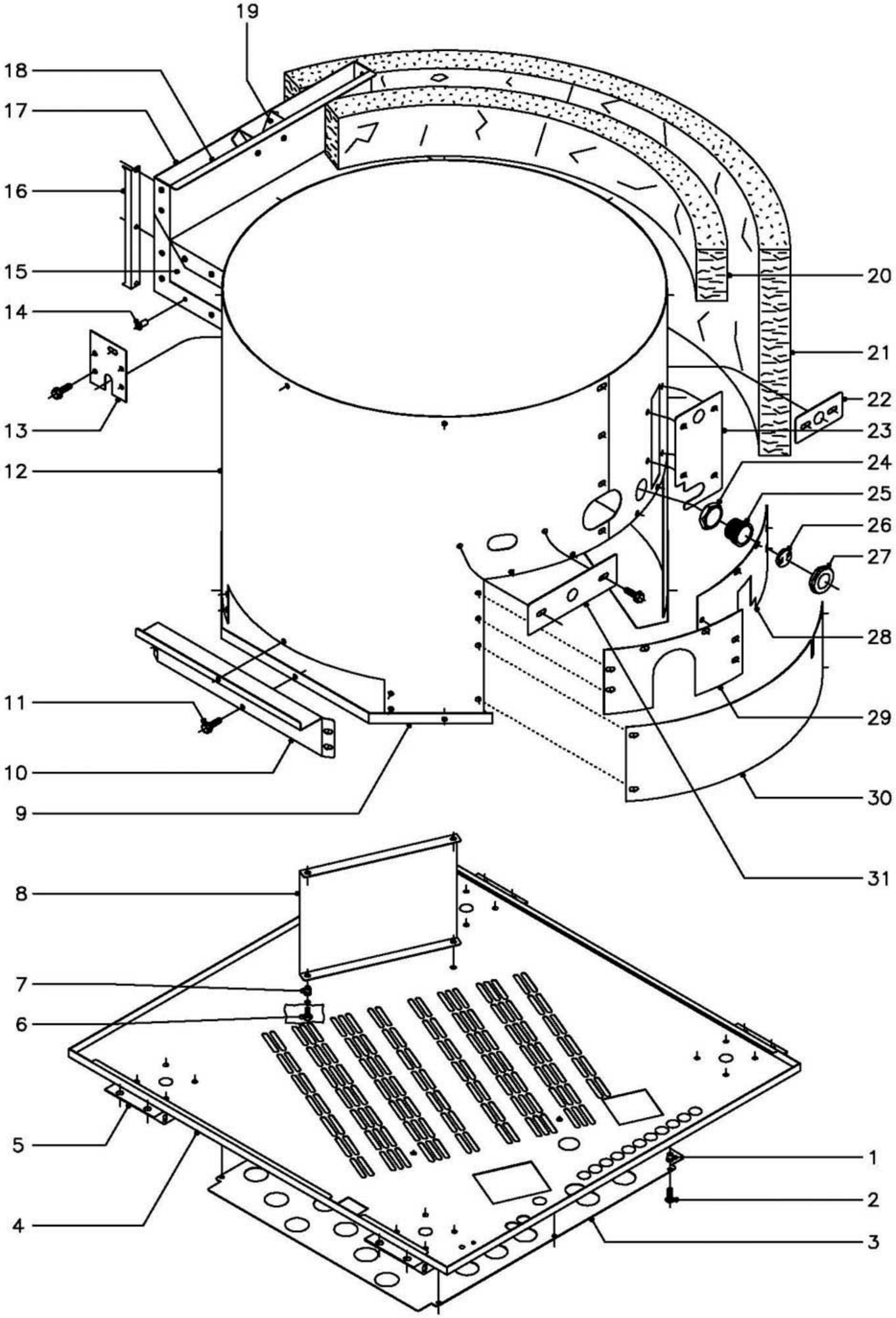


| N plano | Firma | Fecha | Aparato | Lamina | |
|---|---|---|---|---|---|
| C–1060 | | 6–2001 | PIEZAS INTERIORES<br>MARMITAS MG9–10BM, MG9–15BM | 2 | Fagor Industrial S.Coop.<br>Oñate |

| MOD. | MARMITAS | ZONA | PIEZAS INTERIORES | PLANO | C-1060 |
|---|---|---|---|---|---|

| ITEM | CODIGO | DENOMINACION | TEXTO | MG9-10 BM | MG9-15 BM | MG9-10 BM S | MG9-15 BM S | | | | | | NOTAS |
|---|---|---|---|---|---|---|---|---|---|---|---|---|---|
| 1 | Q221342 | Remache exagonal M-5 | | - | 6 | - | - | | | | | | |
| 2 | Q152004 | Tornillo aplastado M-5x13 | | - | 6 | - | - | | | | | | |
| 3 | S272610 | Proteccion suelo | | - | 1 | - | - | | | | | | |
| 4 | S272606 | Base inferior | | 1 | 1 | - | - | | | | | | |
| 4 | S062811 | Base inferior | | - | - | 1 | - | | | | | | |
| 4 | S372814 | Base inferior | | - | - | - | 1 | | | | | | |
| 5 | S032631 | Liston soporte patas | | 2 | 2 | - | - | | | | | | |
| 6 | Q012031 | Tornillo exagonal M-5x10 | | 4 | 4 | 4 | 4 | | | | | | |
| 7 | Q221342 | Remache exagonal M-5 | | 4 | 4 | 4 | 4 | | | | | | |
| 8 | S022616 | Soporte quemador | | 1 | - | - | - | | | | | | |
| 8 | S072605 | Soporte quemador | | - | - | 1 | - | | | | | | |
| 9 | S042625 | Cierre de envolvente | | 1 | 1 | 1 | 1 | | | | | | |
| 10 | S272609 | Cierre lateral envolvente | | 2 | 2 | - | 2 | | | | | | |
| 10 | S072607 | Cierre lateral envolvente | | - | - | 2 | - | | | | | | |
| 11 | Q151323 | Tornillo broca 4,8x16 | | 48 | 48 | 48 | 48 | | | | | | |
| 12 | S022615 | Envolvente | | 1 | - | - | - | | | | | | |
| 12 | S042627 | Envolvente | | - | 1 | - | 1 | | | | | | |
| 12 | S072606 | Envolvente | | - | - | 1 | - | | | | | | |
| 13 | S042615 | Tapa salida para valvula | | 1 | 1 | 1 | 1 | | | | | | |
| 14 | Q419005 | Remache tubular Ø 4x8 | | 24 | 24 | 24 | 24 | | | | | | |
| 15 | S042631 | Amarre lateral chimenea | | 2 | 2 | 2 | 2 | | | | | | |
| 16 | X162657 | Distanciador de chimenea | | 2 | 2 | 2 | 2 | | | | | | |
| 17 | S042628 | Posterior de chimenea | | 1 | 1 | 1 | 1 | | | | | | |
| 18 | S042629 | Anterior de chimenea | | 1 | 1 | 1 | 1 | | | | | | |
| 19 | S035400 | Protector de chimenea | | 1 | 1 | 1 | 1 | | | | | | |
| 20 | S116403 | Aislante 1300x100x50 | | 2 | 2 | 2 | 2 | | | | | | |
| 21 | R092622 | Aislante 1370x650x20 | | 2 | 2 | 2 | 2 | | | | | | |
| 22 | S042640 | Tapa manguitos | | 2 | 2 | 2 | 2 | | | | | | |
| 23 | S022619 | Tapa visualizador | | 1 | - | 1 | - | | | | | | |

| MOD. | MARMITAS | ZONA | PIEZAS INTERIORES | PLANO | C-1060 |
|---|---|---|---|---|---|

| ITEM | CODIGO | DENOMINACION | TEXTO | MG9-10 BM | MG9-15 BM | MG9-10 BM S | MG9-15 BM S | | | | | | NOTAS |
|---|---|---|---|---|---|---|---|---|---|---|---|---|---|
| 23 | S042632 | Tapa visualizador | | - | 1 | - | 1 | | | | | | |
| 24 | Q223014 | Tuerca exagonal 1" | | 1 | 1 | 1 | 1 | | | | | | |
| 25 | 9294500 | Portamirilla | | 1 | 1 | 1 | 1 | | | | | | |
| 26 | 9294600 | Mirilla cristal | | 1 | 1 | 1 | 1 | | | | | | |
| 27 | 9294400 | Tuerca cierre | | 1 | 1 | 1 | 1 | | | | | | |
| 28 | S022617 | Tapa cierre derecho | | 1 | - | 1 | - | | | | | | |
| 28 | S272607 | Tapa cierre derecho | | - | 1 | - | 1 | | | | | | |
| 29 | S272608 | Tapa cierre izquierdo | | 1 | 1 | 1 | 1 | | | | | | |
| 30 | S022618 | Tapa inferior | | 1 | - | - | - | | | | | | |
| 31 | S042644 | Tapa paso bulbo | | 1 | 1 | 1 | 1 | | | | | | |
| | | | | | | | | | | | | | |
| | | | | | | | | | | | | | |
| | | | | | | | | | | | | | |
| | | | | | | | | | | | | | |
| | | | | | | | | | | | | | |
| | | | | | | | | | | | | | |
| | | | | | | | | | | | | | |
| | | | | | | | | | | | | | |
| | | | | | | | | | | | | | |
| | | | | | | | | | | | | | |
| | | | | | | | | | | | | | |
| | | | | | | | | | | | | | |
| | | | | | | | | | | | | | |
| | | | | | | | | | | | | | |
| | | | | | | | | | | | | | |
| | | | | | | | | | | | | | |
| | | | | | | | | | | | | | |
| | | | | | | | | | | | | | |
| | | | | | | | | | | | | | |
| | | | | | | | | | | | | | |
| | | | | | | | | | | | | | |
| | | | | | | | | | | | | | |
| | | | | | | | | | | | | | |
| | | | | | | | | | | | | | |

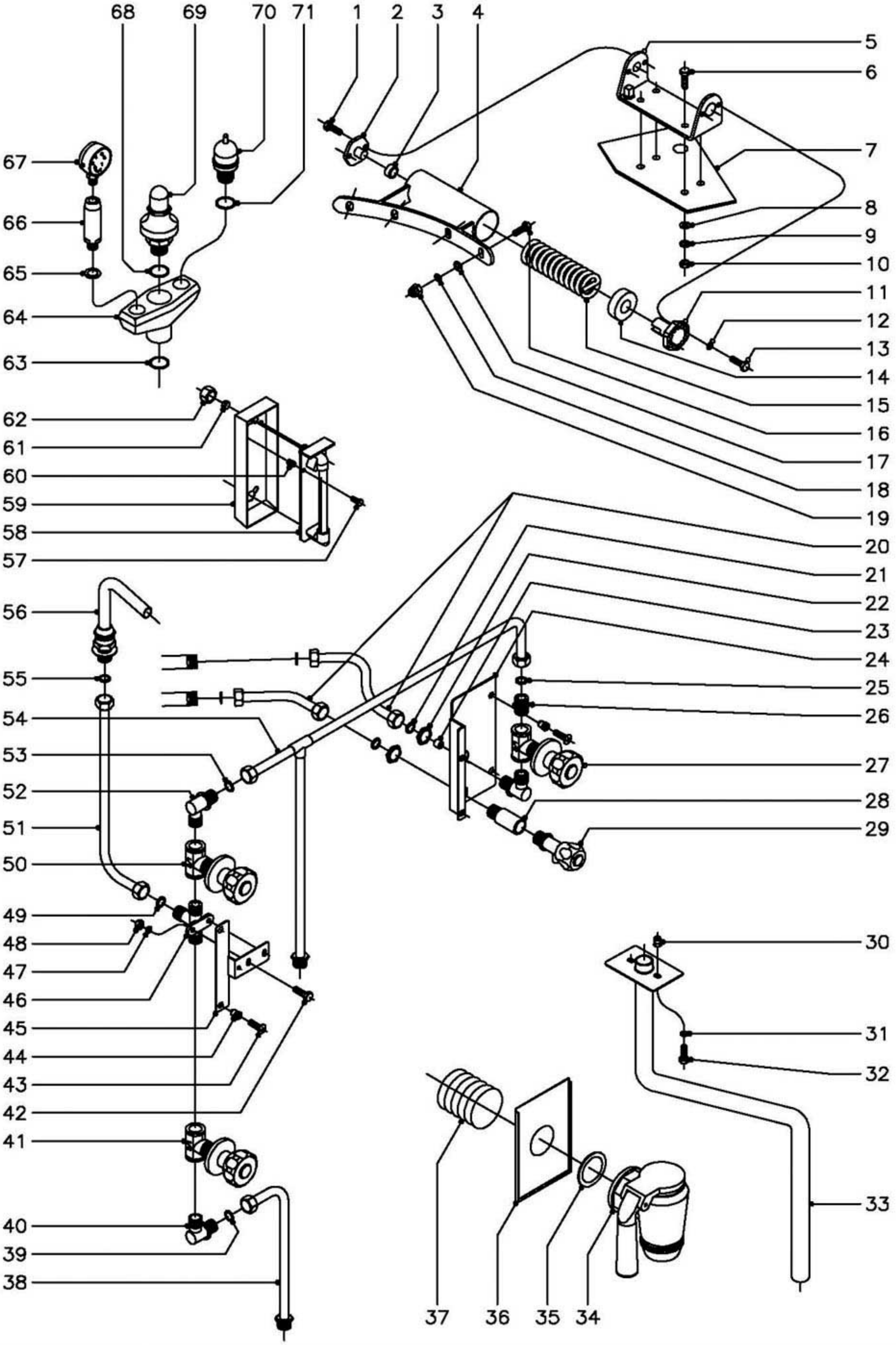


| N plano | Firma | Fecha | Aparato TOMAS,DESAGUES,BISAGRA,VALVULAS,VISUALIZADOR | Lamina | |
|---|---|---|---|---|---|
| C–1061 | | 6–2001 | MARMITAS MG9–10BM, MG9–15BM | 3 | Fagor Industrial S.Coop. FAGOR Oñate |

| MOD. | MARMITAS | ZONA | TOMAS ,DESAGUES,BISAGRA,VALVULAS,VISUALIZADOR | PLANO | C-1061 |
|---|---|---|---|---|---|

| ITEM | CODIGO | DENOMINACION | TEXTO | MG9-10 BM | MG9-15 BM | MG9-10 BM S | MG9-15 BM S | | | | | | NOTAS |
|---|---|---|---|---|---|---|---|---|---|---|---|---|---|
| 1 | Q012041 | Tornillo exagonal M-6x10 | | 2 | 2 | 2 | 2 | | | | | | |
| 2 | S116119 | Giro de asa | | 1 | 1 | 1 | 1 | | | | | | |
| 3 | S116126 | Cojinete cilindrico | | 1 | 1 | 1 | 1 | | | | | | |
| 4 | S036143 | Bisagra tapa | | 1 | 1 | 1 | 1 | | | | | | |
| 4 | S036146 | Bisagra tapa ( Para cuscusera ) | | 1 | 1 | - | - | | | | | | |
| 5 | S036131 | Soporte de bisagra | | 1 | 1 | 1 | 1 | | | | | | |
| 6 | Q012055 | Tornillo exagonal M-8x30 | | 4 | 4 | 4 | 4 | | | | | | |
| 7 | S026102 | Refuerzo bisagra | | 1 | 1 | 1 | 1 | | | | | | |
| 8 | Q232050 | Arandela plana A-8 | | 4 | 4 | 4 | 4 | | | | | | |
| 9 | Q262050 | Arandela muelle A-8 | | 4 | 4 | 4 | 4 | | | | | | |
| 10 | Q162050 | Tuerca exagonal M-8 | | 4 | 4 | 4 | 4 | | | | | | |
| 11 | S116120 | Tensor resorte | | 1 | 1 | 1 | 1 | | | | | | |
| 12 | Q262040 | Arandela muelle A-6 | | 2 | 2 | 2 | 2 | | | | | | |
| 13 | Q012042 | Tornillo exagonal M-6x15 | | 2 | 2 | 2 | 2 | | | | | | |
| 14 | S116118 | Casquillo | | 1 | 1 | 1 | 1 | | | | | | |
| 15 | S116121 | Resorte tapa | | 1 | 1 | 1 | 1 | | | | | | |
| 16 | Q012053 | Tornillo exagonal M-8x20 | | 4 | 4 | 4 | 4 | | | | | | |
| 17 | Q232050 | Arandela plana A-8 | | 4 | 4 | 4 | 4 | | | | | | |
| 18 | Q262050 | Arandela muelle A-8 | | 4 | 4 | 4 | 4 | | | | | | |
| 19 | Q212051 | Tuerca sombrerete M-8 | | 4 | 4 | 4 | 4 | | | | | | |
| 20 | S025006 | Conduccion a nivel B.M. | | 2 | - | 2 | - | | | | | | |
| 20 | S045004 | Conduccion a nivel B.M. | | - | 2 | - | 2 | | | | | | |
| 21 | Q306024 | Arandela junta Ø18xØ12,5x1,5 | | 4 | 4 | 4 | 4 | | | | | | |
| 22 | Q221302 | Tuerca exagonal 1/2" | | 2 | 2 | 2 | 2 | | | | | | |
| 23 | S225012 | Regulador de caudal | | 1 | 1 | 1 | 1 | | | | | | |
| 24 | S092601 | Soporte grifos llenado - vaciado | | 1 | 1 | 1 | 1 | | | | | | |
| | Q221342 | Remache exagonal M-5 | | 2 | 2 | 2 | 2 | | | | | | |
| | Q152004 | Tornillo aplastado M-5x13 | | 2 | 2 | 2 | 2 | | | | | | |
| 25 | Q306024 | Arandela junta Ø18xØ12,5x1,5 | | 1 | 1 | 1 | 1 | | | | | | |

| MOD. | MARMITAS | ZONA | TOMAS ,DESAGUES,BISAGRA,VALVULAS,VISUALIZADOR | PLANO | C-1061 |
|---|---|---|---|---|---|

| ITEM | CODIGO | DENOMINACION | TEXTO | MG9-10 BM | MG9-15 BM | MG9-10 BM S | MG9-15 BM S | | | | | | NOTAS |
|---|---|---|---|---|---|---|---|---|---|---|---|---|---|
| 26 | S205023 | Manguito doble 1/2" | | 1 | 1 | 1 | 1 | | | | | | |
| 27 | S112154 | Llave de paso c/mando (caliente) | | 1 | 1 | 1 | 1 | | | | | | |
| 28 | S045006 | Casquillo grifo nivel | | 1 | 1 | 1 | 1 | | | | | | |
| 29 | S022104 | Grifo nivel | | 1 | 1 | 1 | 1 | | | | | | |
| 30 | Q221342 | Remache exagonal M-5 | | 2 | 2 | 2 | 2 | | | | | | |
| 31 | Q262030 | Arandela muelle A-5 | | 2 | 2 | 2 | 2 | | | | | | |
| 32 | Q012032 | Tornillo exagonal M-5x15 | | 2 | 2 | 2 | 2 | | | | | | |
| 33 | S036119 | Tubo vaciado | | 1 | 1 | - | 1 | | | | | | |
| 33 | S065004 | Tubo vaciado | | - | - | 1 | - | | | | | | |
| 34 | S112150 | Grifo de vaciado | | 1 | 1 | 1 | 1 | | | | | | |
| 35 | S112152 | Junta grifo vaciado | | 1 | 1 | 1 | 1 | | | | | | |
| 36 | S112803 | Cubierta de grifo | | 1 | 1 | 1 | 1 | | | | | | |
| 37 | S112105 | Muelle soporte cubierta | | 1 | 1 | 1 | 1 | | | | | | |
| 38 | S035036 | Conducto entrada agua inferior | | 1 | 1 | - | - | | | | | | |
| 38 | S065020 | Conducto entrada agua inferior | | - | - | 1 | - | | | | | | |
| 38 | S375007 | Conducto entrada agua inferior | | - | - | - | 1 | | | | | | |
| 39 | Q306024 | Arandela junta Ø18xØ12,5x1,5 | | 1 | 1 | 1 | 1 | | | | | | |
| 40 | S115013 | Codo | | 1 | 1 | 1 | 1 | | | | | | |
| 41 | S112151 | Llave de paso con mando (fria) | | 1 | 1 | 1 | 1 | | | | | | |
| 42 | Q012042 | Tornillo exagonal M-6x15 | | 2 | 2 | 2 | 2 | | | | | | |
| 43 | Q152004 | Tornillo aplastado M-5x13 | | 2 | 2 | 2 | 2 | | | | | | |
| 44 | Q221342 | Remache exagonal M-5 | | 2 | 2 | 2 | 2 | | | | | | |
| 45 | S032640 | Soporte grifos de agua | | 1 | 1 | 1 | 1 | | | | | | |
| 46 | S205022 | Racord union de grifos | | 1 | 1 | 1 | 1 | | | | | | |
| 47 | Q262040 | Arandela muelle A-6 | | 2 | 2 | 2 | 2 | | | | | | |
| 48 | Q162040 | Tuerca exagonal M-6 | | 2 | 2 | 2 | 2 | | | | | | |
| 49 | Q306024 | Arandela junta Ø18xØ12,5x1,5 | | 1 | 1 | 1 | 1 | | | | | | |
| 50 | S112154 | Llave de paso c/mando (caliente) | | 1 | 1 | 1 | 1 | | | | | | |
| 51 | S035032 | Conducto grifos a base | | 1 | 1 | 1 | 1 | | | | | | |

| MOD. | MARMITAS | ZONA | TOMAS ,DESAGUES,BISAGRA,VALVULAS,VISUALIZADOR | PLANO | C-1061 |
|---|---|---|---|---|---|

| ITEM | CODIGO | DENOMINACION | TEXTO | MG9-10 BM | MG9-15 BM | MG9-10 BM S | MG9-15 BM S | | | | | | NOTAS |
|---|---|---|---|---|---|---|---|---|---|---|---|---|---|
| 52 | S115013 | Codo | | 1 | 1 | 1 | 1 | | | | | | |
| 53 | Q306024 | Arandela junta Ø18xØ12,5x1,5 | | 1 | 1 | 1 | 1 | | | | | | |
| 54 | S045015 | Conducto entrada agua superior | | 1 | 1 | - | - | | | | | | |
| 54 | S075010 | Conducto entrada agua superior | | - | - | 1 | - | | | | | | |
| 54 | S375005 | Conducto entrada agua superior | | - | - | - | 1 | | | | | | |
| 55 | Q306024 | Arandela junta Ø18xØ12,5x1,5 | | 1 | 1 | 1 | 1 | | | | | | |
| 56 | S052100 | Tubo de llenado | | 1 | 1 | 1 | 1 | | | | | | |
| 57 | Q012021 | Tornillo exagonal M-4x10 | | 2 | 2 | 2 | 2 | | | | | | |
| 58 | S082100 | Visualizador | | 1 | 1 | 1 | 1 | | | | | | |
| 59 | S292600 | Proteccion visualizador | | 1 | 1 | 1 | 1 | | | | | | |
| 60 | Q221341 | Remache exagonal M-4 | | 2 | 2 | 2 | 2 | | | | | | |
| 61 | U265008 | Bicono Ø 10 | | 2 | 2 | 2 | 2 | | | | | | |
| 62 | S082101 | Tuerca 3/8" | | 2 | 2 | 2 | 2 | | | | | | |
| 63 | Q306049 | Arandela junta Ø31xØ26,5x1 | | 1 | 1 | 1 | 1 | | | | | | |
| 64 | S022100 | Soporte tres salidas | | 1 | 1 | 1 | 1 | | | | | | |
| 65 | Q306039 | Arandela junta Ø25xØ16,5x1,5 | | 1 | 1 | 1 | 1 | | | | | | |
| 66 | S022102 | Sifon portamanometro | | 1 | 1 | 1 | 1 | | | | | | |
| 67 | 9220815 | Manometro de 0 a 1 kg/cm2 | | 1 | 1 | 1 | 1 | | | | | | |
| 68 | Q306049 | Arandela junta Ø31xØ26,5x1 | | 1 | 1 | 1 | 1 | | | | | | |
| 69 | S022101 | Valvula de seguridad | | 1 | 1 | 1 | 1 | | | | | | |
| 70 | S022103 | Valvula de presion | | 1 | 1 | 1 | 1 | | | | | | |
| 71 | Q306049 | Arandela junta Ø31xØ26,5x1 | | 1 | 1 | 1 | 1 | | | | | | |
| | | | | | | | | | | | | | |
| | | | | | | | | | | | | | |
| | | | | | | | | | | | | | |
| | | | | | | | | | | | | | |
| | | | | | | | | | | | | | |
| | | | | | | | | | | | | | |
| | | | | | | | | | | | | | |

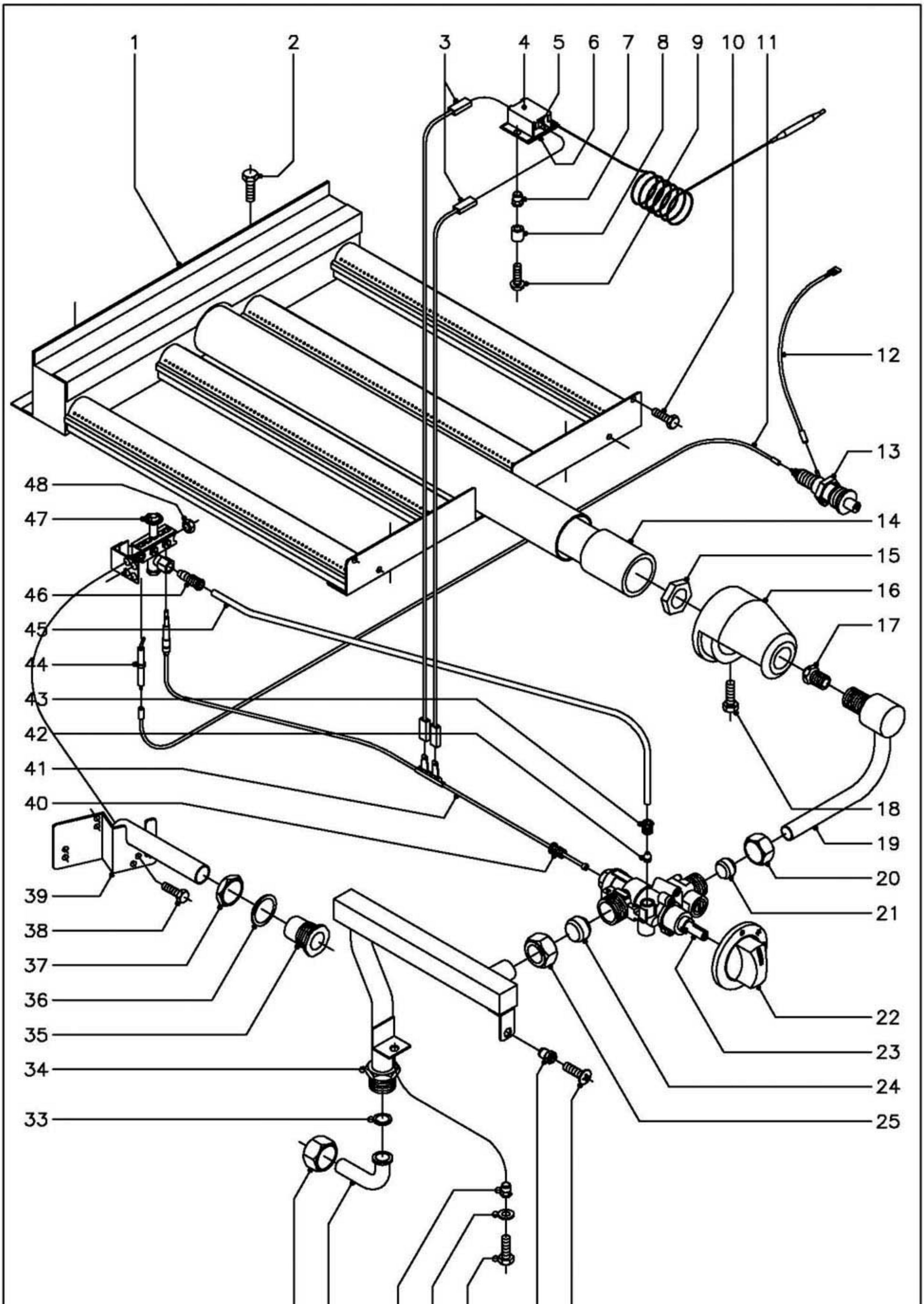


| N plano | Firma | Fecha | Aparato | Lamina | |
|---|---|---|---|---|---|
| C–1062 | | 6–2001 | PARTE FUNCIONAL GAS<br>MARMITAS MG9–10BM, MG9–15BM | 4 | Fagor Industrial S.Coop. FAGOR<br>Oñate |

| MOD. | MARMITAS | ZONA | PARTE FUNCIONAL GAS | PLANO | C-1062 |
|---|---|---|---|---|---|

| ITEM | CODIGO | DENOMINACION | TEXTO | MG9-10 BM | MG9-15 BM | MG9-10 BM S | MG9-15 BM S | | | | | | NOTAS |
|---|---|---|---|---|---|---|---|---|---|---|---|---|---|
| 1 | S275705 | Quemador | | 1 | 1 | 1 | 1 | | | | | | |
| 2 | Q012031 | Tornillo exagonal M-5x10 | | 4 | 4 | 4 | 4 | | | | | | |
| 3 | S223002 | Cableado termostato a temopar | | 1 | 1 | 1 | 1 | | | | | | |
| 4 | X353007 | Soporte termostato seguridad | | 1 | 1 | 1 | 1 | | | | | | |
| 5 | X033001 | Termostato de seguridad | | 1 | 1 | 1 | 1 | | | | | | |
| 6 | X353015 | Placa aislante termostato | | 1 | 1 | 1 | 1 | | | | | | |
| 7 | Q221341 | Remache exagonal M-4 | | 2 | 2 | 2 | 2 | | | | | | |
| 8 | U813000 | Distanciador | | 2 | 2 | 2 | 2 | | | | | | |
| 9 | Q151320 | Tornillo alomado M-4x6 | | 2 | 2 | 2 | 2 | | | | | | |
| 10 | Q012031 | Tornillo exagonal M-5x10 | | 2 | 2 | 2 | 2 | | | | | | |
| 11 | U323030 | Cable bujia a piezoelectrico | | 1 | 1 | 1 | 1 | | | | | | |
| 12 | U333003 | Cable masa a piezoelectrico | | 1 | 1 | 1 | 1 | | | | | | |
| 13 | S113034 | Piezoelectrico | | 1 | 1 | 1 | 1 | | | | | | |
| 14 | S135733 | Venturi | | 1 | 1 | 1 | 1 | | | | | | |
| 15 | Q221302 | Tuerca exagonal 1/2" | | 1 | 1 | 1 | 1 | | | | | | |
| 16 | 0628100 | Camara de mezcla | | 1 | 1 | 1 | 1 | | | | | | |
| 17 | S012400 | Tobera Ø2,20 (Butano-Propano) | | 1 | - | 1 | - | | | | | | |
| 17 | S032400 | Tobera Ø2,45 (Butano-Propano) | | - | 1 | - | 1 | | | | | | |
| 17 | S012401 | Tobera Ø3,10 (Gas Natural) | | 1 | - | 1 | - | | | | | | |
| 17 | S114401 | Tobera Ø3,65 (Gas Natural) | | - | 1 | - | 1 | | | | | | |
| 17 | S012402 | Tobera Ø5,90 (Gas Villa) | | 1 | - | 1 | - | | | | | | |
| 17 | S032401 | Tobera Ø6,90 (Gas Villa) | | - | 1 | - | 1 | | | | | | |
| 18 | Q012043 | Tornillo exagonal M-6x20 | | 1 | 1 | 1 | 1 | | | | | | |
| 19 | S025010 | Conduccion a quemador | | 1 | - | 1 | - | | | | | | |
| 19 | S045025 | Conduccion a quemador | | - | 1 | - | 1 | | | | | | |
| 20 | S312105 | Tuerca fijacion conduc.a quemador | | 1 | 1 | 1 | 1 | | | | | | |
| 21 | S312106 | Bicono Ø16 | | 1 | 1 | 1 | 1 | | | | | | |
| 22 | S312110 | Boton de mando Ø10 | | 1 | 1 | 1 | 1 | | | | | | |
| 23 | S312101 | Grifo SC. PEL-23S. V (min. Ø1,40) | | 1 | 1 | 1 | 1 | | | | | | |

| MOD. | MARMITAS | ZONA | PARTE FUNCIONAL GAS | PLANO | C-1062 |
|---|---|---|---|---|---|

| ITEM | CODIGO | DENOMINACION | TEXTO | MG9-10 BM | MG9-15 BM | MG9-10 BM S | MG9-15 BM S | | | | | | NOTAS |
|---|---|---|---|---|---|---|---|---|---|---|---|---|---|
| 24 | S312104 | Bicono Ø20 | | 1 | 1 | 1 | 1 | | | | | | |
| 25 | S312103 | Tuerca fijacion conduccion general | | 1 | 1 | 1 | 1 | | | | | | |
| 26 | Q152004 | Tornillo aplastado M-5x13 | | 1 | 1 | 1 | 1 | | | | | | |
| 27 | Q221342 | Remache exagonal M-5 | | 1 | 1 | 1 | 1 | | | | | | |
| 28 | Q012042 | Tornillo exagonal M-6x15 | | 1 | 1 | 1 | 1 | | | | | | |
| 29 | Q302022 | Arandela plana Ø16xØ6x1,2 | | 1 | 1 | 1 | 1 | | | | | | |
| 30 | Q221343 | Remache exagonal M-6 | | 1 | 1 | 1 | 1 | | | | | | |
| 31 | U565007 | Codo entrada gas | | 1 | 1 | - | - | | | | | | |
| 32 | U725006 | Tuerca 3/4" | | 1 | 1 | - | - | | | | | | |
| 33 | Q306052 | Arandela junta Ø23,5xØ15,5x3 | | 1 | 1 | - | - | | | | | | |
| 34 | S035030 | Conduccion general | | 1 | 1 | - | - | | | | | | |
| 34 | S065016 | Conduccion general | | - | - | 1 | - | | | | | | |
| 34 | S375002 | Conduccion general | | - | - | - | 1 | | | | | | |
| 35 | S112804 | Embellecedor tubo de encendido | | 1 | 1 | 1 | 1 | | | | | | |
| 36 | Q306027 | Arandela junta Ø33,8xØ27x1,5 | | 1 | 1 | 1 | 1 | | | | | | |
| 37 | Q221324 | Tuerca exagonal 3/4" | | 1 | 1 | 1 | 1 | | | | | | |
| 38 | Q012031 | Tornillo exagonal M-5x10 | | 2 | 2 | 2 | 2 | | | | | | |
| 39 | S045028 | Tubo de encendido | | 1 | 1 | 1 | 1 | | | | | | |
| 40 | U264301 | Racord empalme termopar | | 1 | 1 | 1 | 1 | | | | | | |
| 41 | X022130 | Termopar L=850 | | 1 | 1 | 1 | 1 | | | | | | |
| 42 | X205028 | Bicono Ø 6 | | 1 | 1 | 1 | 1 | | | | | | |
| 43 | S312107 | Manguito tubo piloto | | 1 | 1 | 1 | 1 | | | | | | |
| 44 | X012101 | Bujia de encendido | | 1 | 1 | 1 | 1 | | | | | | |
| 45 | S015012 | Tubo piloto de 100 l. | | 1 | - | 1 | - | | | | | | |
| 45 | S045027 | Tubo piloto de 200 l. | | - | 1 | - | 1 | | | | | | |
| 46 | U134323 | Racord con bicono Ø 6 | | 1 | 1 | 1 | 1 | | | | | | |
| 47 | R202100 | Conjunto soporte y piloto | | 1 | 1 | 1 | 1 | | | | | | |
| | U442138 | Inyector piloto Ø 0,25 ( B.P.y G.V. ) | | 1 | 1 | 1 | 1 | | | | | | Regular para G.V. |
| | U442137 | Inyector piloto Ø 0,40 (Gas Natural) | | 1 | 1 | 1 | 1 | | | | | | |
| 48 | Q162030 | Tuerca exagonal M-5 | | 2 | 2 | 2 | 2 | | | | | | |

| MOD. | MARMITAS | ZONA | VARIOS | PLANO | |
|---|---|---|---|---|---|

| ITEM | CODIGO | DENOMINACION | TEXTO | MG9-10 BM | MG9-15 BM | MG9-10 BM S | MG9-15 BM S | | | | | | NOTAS |
|---|---|---|---|---|---|---|---|---|---|---|---|---|---|
| | S036515 | Folleto de instrucciones | | 1 | 1 | 1 | 1 | | | | | | |
| | | | | | | | | | | | | | |
| | | | | | | | | | | | | | |
| | | | | | | |

| MOD. | MARMITAS | ZONA | PIEZAS ESPECIFICAS PARA LOS DISTINTOS GASES | PLANO | C-1062 |
|---|---|---|---|---|---|

| ITEM | CODIGO | DENOMINACION | TEXTO | MG9-10 BM | MG9-15 BM | MG9-10 BM S | MG9-15 BM S | | | | | | NOTAS |
|---|---|---|---|---|---|---|---|---|---|---|---|---|---|
| | | **BUTANO - PROPANO** | | | | | | | | | | | |
| 17 | S012400 | Tobera Ø2,20 | | 1 | - | 1 | - | | | | | | |
| 17 | S032400 | Tobera Ø2,45 | | - | 1 | - | 1 | | | | | | |
| 47 | U442138 | Inyector piloto Ø 0,25 | | 1 | 1 | 1 | 1 | | | | | | |
| s/n | U136501 | Indicador ( Butano - Propano ) | | 1 | 1 | 1 | 1 | | | | | | |
| | | | | | | | | | | | | | |
| | | | | | | | | | | | | | |
| | | | | | | | | | | | | | |
| | | | | | | | | | | | | | |
| | | **GAS NATURAL** | | | | | | | | | | | |
| 17 | S012401 | Tobera Ø3,10 | | 1 | - | 1 | - | | | | | | |
| 17 | S114401 | Tobera Ø3,65 | | - | 1 | - | 1 | | | | | | |
| 47 | U442137 | Inyector piloto Ø 0,40 | | 1 | 1 | 1 | 1 | | | | | | |
| s/n | U134402 | Indicador ( Gas Natural ) | | 1 | 1 | 1 | 1 | | | | | | |
| | | | | | | | | | | | | | |
| | | | | | | | | | | | | | |
| | | | | | | | | | | | | | |
| | | | | | | | | | | | | | |
| | | **GAS VILLA** | | | | | | | | | | | |
| 17 | S012402 | Tobera Ø5,90 | | 1 | - | 1 | - | | | | | | |
| 17 | S032401 | Tobera Ø6,90 | | - | 1 | - | 1 | | | | | | |
| 47 | U442138 | Inyector piloto Ø 0,25 | | 1 | 1 | 1 | 1 | | | | | | Regular para G.V. |
| s/n | U134310 | Indicador ( Gas Villa ) | | 1 | 1 | 1 | 1 | | | | | | |
| | | | | | | | | | | | | | |
| | | | | | | | | | | | | | |
| | | | | | | | | | | | | | |
| | | | | | | | | | | | | | |
| | | | | | | | | | | | | | |
| | | | | | | | | | | | | | |

| MOD. | MARMITAS | ZONA | VERSION ARGELIA | PLANO | C-1061 |
|---|---|---|---|---|---|

| ITEM | CODIGO | DENOMINACION | TEXTO | MG9-10 BM | MG9-15 BM | MG9-10 BM S | MG9-15 BM S | | | | | | NOTAS |
|---|---|---|---|---|---|---|---|---|---|---|---|---|---|
| 4 | S036146 | Bisagra tapa ( Para cuscusera ) | | 1 | 1 | - | - | | | | | | |
| | | | | | | | | | | | | | |
| | | | | | | | | | | | | | |
| | | | | | | |