DESPIECE TECNICO

Fry-tops a gas
Gas fry-tops
Fry-tops à gaz
Gas-griddle-platten
Fry-tops a gas
Fry-tops a gás

GAMA 900

Modelos:

FTG9-05 PLUS
FTG9-10 PLUS
FTG9-05 PLUS V
FTG9-10 PLUS V

Octubre 2011 October
Revisado Junio 2013 June Revised

FAGOR

FAGOR INDUSTRIAL

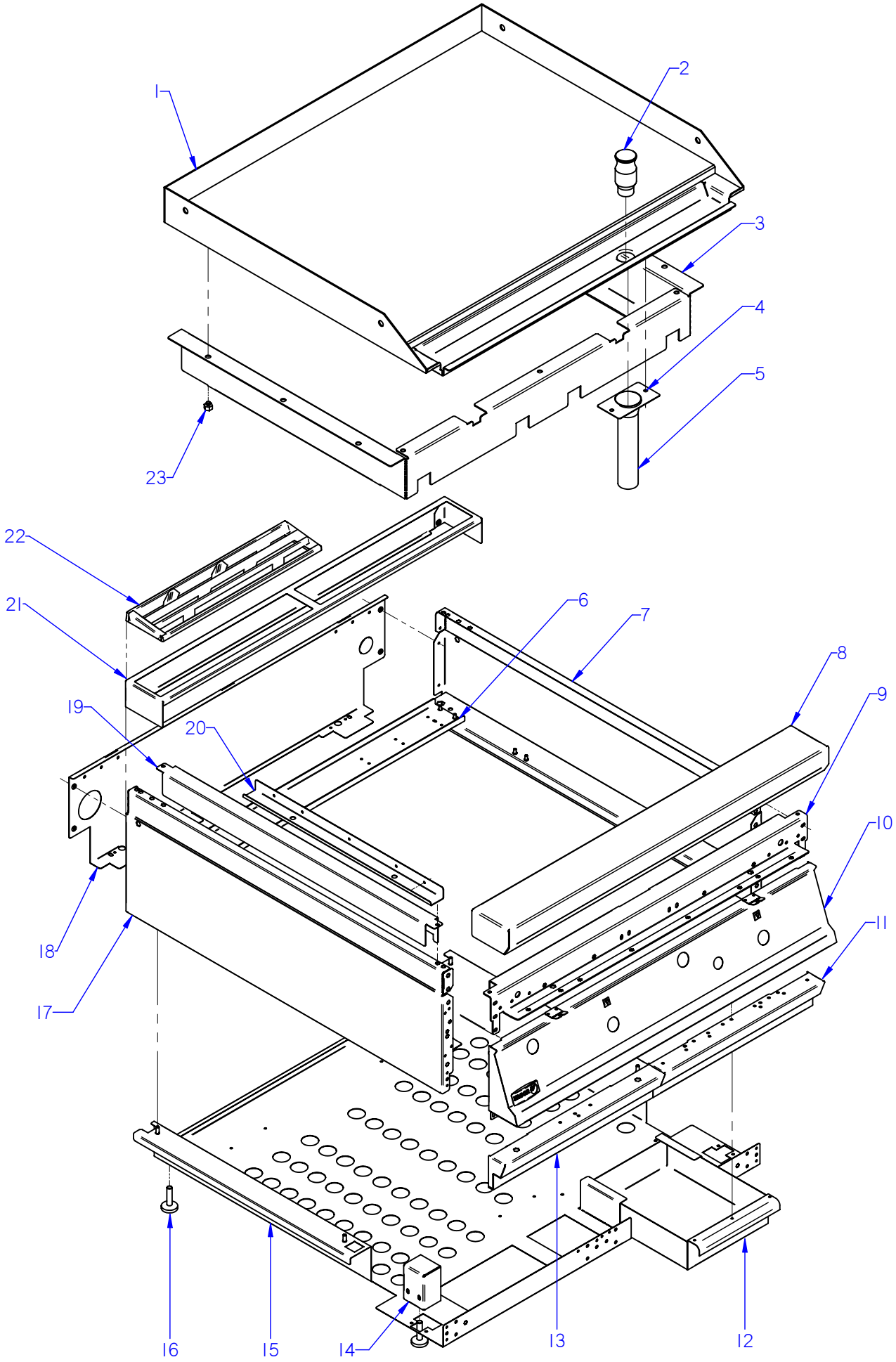

ITEM MARCADO EN COLOR = REPUESTO RECOMENDADO
COLOURED ITEM = RECOMMENDED SPARE PART

Nº plano / N º plane	Firma	Fecha / Date	Denominación / Denomination: MUEBLE / FITTING	Lamina / Sheet	
C-2900		2011-10	FRY-TOP FTG9-05 / 10 PLUS	1	Fagor Industrial S.Coop. FAGOR Oñate

MOD.	FRY-TOP	ZONA / ZONE	MUEBLE / FITTING	PLANO DIAGRAM	C-2900

ITEM	CODIGO REFERENCE	DENOMINACION	DENOMINATION	FTG9-05 PLUS	FTG9-10 PLUS	FTG9-05 PLUS V	FTG9-10 PLUS V					ELIMINADO ELIMINATED	INTRODUCID. INTRODUCED	NOTAS
1	R045402000	PLANCHA FTG9-05 L EUROSIT	PLATE FTG9-05 L EUROSIT	1	_	_	_							
1	R045405000	PLANCHA FTG9-05 R EUROSIT	PLATE FTG9-05 R EUROSIT	1	_	_	_							
1	R045404000	PLANCHA FTG/C9-05 L EUROSIT	PLATE FTG/C9-05 L EUROSIT	1	_	_	_							
1	R045406000	PLANCHA FTG/C9-05 R EUROSIT	PLATE FTG/C9-05 R EUROSIT	1	_	_	_							
1	R065401000	PLANCHA FTG9-10 L EUROSIT	PLATE FTG9-10 L EUROSIT	_	1	_	_							
1	R065408000	PLANCHA FTG9-10 R EUROSIT	PLATE FTG9-10 R EUROSIT	_	1	_	_							
1	R065406000	PLANCHA FTG9-10 L+R EUROSIT	PLATE FTG9-10 L+R EUROSIT	_	1	_	_							
1	R065405000	PLANCHA FTG/C9-10 L EUROSIT	PLATE FTG/C9-10 L EUROSIT	_	1	_	_							
1	R065409000	PLANCHA FTG/C9-10 R EUROSIT	PLATE FTG/C9-10 R EUROSIT	_	1	_	_							
1	R065407000	PLANCHA FTG/C9-10 L+R EUROS.	PLATE FTG/C9-10 L+R EUROS.	_	1	_	_							
1	R045407000	PLANCHA FTG9-05 L VALVULA	PLATE FTG9-05 L VALVE	_	_	1	_							
1	R045408000	PLANCHA FTG9-05 R VALVULA	PLATE FTG9-05 R VALVE	_	_	1	_							
1	R065410000	PLANCHA FTG9-10 L VALVULA	PLATE FT9-10 L VALVE	_	_	_	1							
1	R065412000	PLANCHA FTG9-10 R VALVULA	PLATE FTG9-10 R VALVE	_	_	_	1							
1	R065411000	PLANCHA FTG-910 L+R VALVULA	PLATE FTG-910 L+R VALVE	_	_	_	1							
2	R045415000	TAPON DESAGÜE CR-DURO	DRAINAGE CAP CHROME PLATE	1	1	_	_							SOLO CROMO DURO
3	R062610000	PROTECCIÓN LATERAL AD	LATERAL PROTECTION AD	2	2	2	2							
3	R042629000	LISTON FRONTAL FTG9-05 AD	RIBBON FRONT FTG9-05 AD	1	_	_	_							
3	R062609000	LISTON FRONTAL FTG9-10 AD	RIBBON FRONT FTG9-10 AD	_	1	_	_							
3	R042630000	LISTON FRONTAL FTG9-05 V AD	RIBBON FRONT FTG9-05 V AD	_	_	1	_							
3	R062616000	LISTON FRONTAL FTG9-10 V AD	RIBBON FRONT FTG9-10 V AD	_	_	_	1							
	Q012042000	TORNILLO EXAGONAL M6X15 A304	HEXAGONAL BOLT M6X15 A.304	2	3	2	3							
4	R042615000	SOPORTE TUBO DESAGÜE	DRAINAGE PIPE SUPPORT	1	1	1	1							
	Q302022000	ARANDELA 16X6X1.2 A.304	WASHER 16X6X1.2 A.304	2	2	2	2							
	Q162040000	TUERCA EXAGONAL M6	HEXAGONAL NUT M6	2	2	2	2							
5	R155010000	TUBO DESAGÜE FRY-TOP G-900	DRAINAGE PIPE FRY-TOP G900	1	1	1	1							
6	R042612000	BASE SOP. QUEMAD. FTG9-05 AD	FTG9-05 BURNER BRACKET BAS	1	_	1	_							
6	R062612000	BASE SOP. QUEMAD. FTG9-10 AD	FTG9-10 BURNER BRACKET BAS	_	1	_	1							
	Q262030000	ARANDELA GROW. A5 A.304	WASHER GROW. A6 A.304	4	4	4	4							
	Q162040000	TUERCA EXAGONAL M6	HEXAGONAL NUT M5	4	4	4	4							

MOD.	FRY-TOP	ZONA / ZONE	MUEBLE / FITTING	PLANO DIAGRAM	C-2900

ITEM	CODIGO REFERENCE	DENOMINACION	DENOMINATION	FTG9-05 PLUS	FTG9-10 PLUS	FTG9-05 PLUS V	FTG9-10 PLUS V					ELIMINADO ELIMINATED	INTRODUCID. INTRODUCED	NOTAS
7	R062810000	PANEL LATERAL DERECHO G9-00	RIGHT SIDE PANEL G900	1	1	1	1							
	Q221342000	REMACHE EXAGONAL M5	HEXAGONAL RIVET M5	7	7	7	7							
	Q162030000	TUERCA EXAGONAL M5	HEXAGONAL NUT M5	2	2	2	2							
	Q221345000	REMACHE EXAGONAL M10	HEXAGONAL RIVET M10	2	2	2	2							
	Q419005000	REMACHE 4X8 ALMG3 / ALUMINIO	RIVET 4X8 ALMG3 / ALUMINIUM	2	2	2	2							
8	U965415000	ANTERIOR DE MESA 1/2 M	FRONT BENCH 1/2 M	1	_	1	_							
8	S105403000	ANTERIOR DE MESA 1 M	FRONT BENCH 1 M	_	1	_	1							
	Q152004000	TORN. APLASTADO M5x13 A304	FLAT HEADED SCREW M5x13	2	2	2	2							
9	R042611000	ESCUA INTER AMAR ANTE 0,5 M	BRACKET INTER FASTE. FRONT (	1	_	1	_							
9	U042610000	ESCUA INTER AMAR ANTE 1 M	BRACKET INTER FASTE. FRONT	_	1	_	1							
	Q221342000	REMACHE EXAGONAL M5	HEXAGONAL RIVET M5	3	4	3	4							
	Q012032000	TORNILLO EXAGONAL M5X15 A304	HEXAGONAL BOLT M5X15 A304	6	6	6	6							
10	R042851000	PORTAMANDOS FTG9-05 AD	CONTROL HOLDER FTG9-05 AD	1	_	_	_							
10	R062828000	PORTAMANDOS FTG9-10 AD	CONTROL HOLDER FTG9-10 AD	_	1	_	_							
10	R042856000	PORTAMANDOS FTG9-05 V AD	CONTROL HOLDER FTG9-05 V A	_	_	1	_							
10	R062832000	PORTAMANDOS FTG9-10 V AD	CONTROL HOLDER FTG9-10 V A	_	_	_	1							
	U022836000	ESCUDO FAGOR	FAGOR EMBLEM G700	1	1	1	1							
	Q221023000	CLIP SUJECIÓN RÁPIDA Ø5	RAPID CONNECT CLIP Ø5	2	2	2	2							
S/Nº	12044303	LAGRIMA	IGNITOR WINDON COVER	1	1	1	1						01,04,12	
S/Nº	12025252	MUELLE 07777	SPRING 07777	1	1	1	1						01,04,12	
11	H012821000	ASA BANDEJA IZQUIER.-DERECHA	SKIRTING ASA	1	1	1	1							
12	R042614000	CAJA RECOGEGRASAS AD	GREASE COLLECTION TRAY AD	1	1	1	1							
	Q419005000	REMACHE 4x8 ALMG3 / ALUMINIO	RIVET 4X8 ALMG3 / ALUMINIUM	3	3	3	3							
13	R062805000	ZOCALO INFERIOR FRY-TOP	SKIRTING ASA	_	1	_	1							
	Q012042000	TORNILLO EXAGONAL M6x15	HEXAGONAL BOLT M6X15	_	2	_	2							
	Q302022000	ARANDELA 16x6x1,2 A304	WASHER 16X6X1.2 A.304	_	2	_	2							
14	U962627000	ESCUADRA AMARRE PATA AD	LEG FASTENING BRACKET AD	2	2	2	2							
	X010503000	CIERRE MUELLE	LOCK SPRING	2	2	2	2							
	Q419007000	REMACHE TUBULAR C/V Ø3,2x6	TUBULAR RIVET C/V Ø3.2X6	4	4	4	4							
	Q162030000	TUERCA EXAGONAL M5	HEXAGONAL NUT M5	4	4	4	4							
	Q262030000	ARANDELA GROW. A5 A304	WASHER GROW. A5 A.304	4	4	4	4							

MOD.	FRY-TOP	ZONA / ZONE	MUEBLE / FITTING	PLANO DIAGRAM	C-2900

ITEM	CODIGO REFERENCE	DENOMINACION	DENOMINATION	FTG9-05 PLUS	FTG9-10 PLUS	FTG9-05 PLUS V	FTG9-10 PLUS V					ELIMINADO ELIMINATED	INTRODUCID. INTRODUCED	NOTAS
15	R042852000	BASE INFERIOR FTG9-05 COM. AD	LOWER BASE FTG9-05 AD	1	_	1	_							
15	R062830000	BASE FTG9-10 COMPL. AD	BASE FTG9-10 AD	_	1	_	1							
	Q221345000	REMACHE EXAGONAL M10	HEXAGONAL RIVET M10	2	2	2	2							
	Q221343000	REMACHE EXAGONAL M6	HEXAGONAL RIVET M6	_	2	_	2							
16	Z200107000	PATA REGULABLE	ADJUSTABLE LEG	4	4	4	4							
	Q221345000	REMACHE EXAGONAL M10	HEXAGONAL RIVET M10	4	4	4	4							
17	R062811000	PANEL LATERA IZQUIERDO G-900	LEFT SIDE PANEL G-900	1	1	1	1							
	Q221342000	REMACHE EXAGONAL M5	HEXAGONAL RIVET M5	7	7	7	7							
	Q162030000	TUERCA EXAGONAL M5	HEXAGONAL NUT M5	2	2	2	2							
	Q221345000	REMACHE EXAGONAL M10	HEXAGONAL RIVET M10	2	2	2	2							
	Q419005000	REMACHE 4X8 ALMG3 / ALUMINIO	RIVET 4X8 ALMG3 / ALUMINIUM	2	2	2	2							
18	R042838000	PANEL POSTERIOR 0,5 M	REAR PANEL 0.5 M	1	_	1	_							
18	U042805000	PANEL POSTERIOR 1 M	REAR PANEL 1 M	_	1	_	1							
	Q419005000	REMACHE 4x8 ALMG3 / ALUMINIO	RIVET 4X8 ALMG3 / ALUMINIUM	4	4	4	4							
	X010503000	CIERRE MUELLE	LOCK SPRING	2	2	2	2							
19	R152807000	LATERAL DE MESA	BENCH SIDE	2	2	2	2							
	Q012032000	TORNILLO EXAGONAL M5X15 A304	HEXAGONAL BOLT M5X15 A304	6	6	6	6							
20	R042626000	TIRANTE LATERAL AD	SIDE TIE ROD AD	2	2	2	2							
	Q419005000	REMACHE 4X8 ALMG3 / ALUMINIO	RIVET 4X8 ALMG3 / ALUMINIUM	6	6	6	6							
21	R205438000	SOPORTE EMBELLECEDOR 1/2M	1/2M TRIM SUPPORT	1	_	1	_							
21	R205439000	SOPORTE EMBELLECEDOR 1M	TRIM SUPPORT 1M	_	1	_	1							
	Q419005000	REMACHE 4X8 ALMG3 / ALUMINIO	RIVET 4X8 ALMG3 / ALUMINIUM	2	2	2	2							
22	R205425000	EMBELLECEDOR ESMALTE	ENAMEL TRIM	1	2	1	2							
23	R615412000	APOYO LATERAL	SIDE SUPPORT	6	6	6	6							

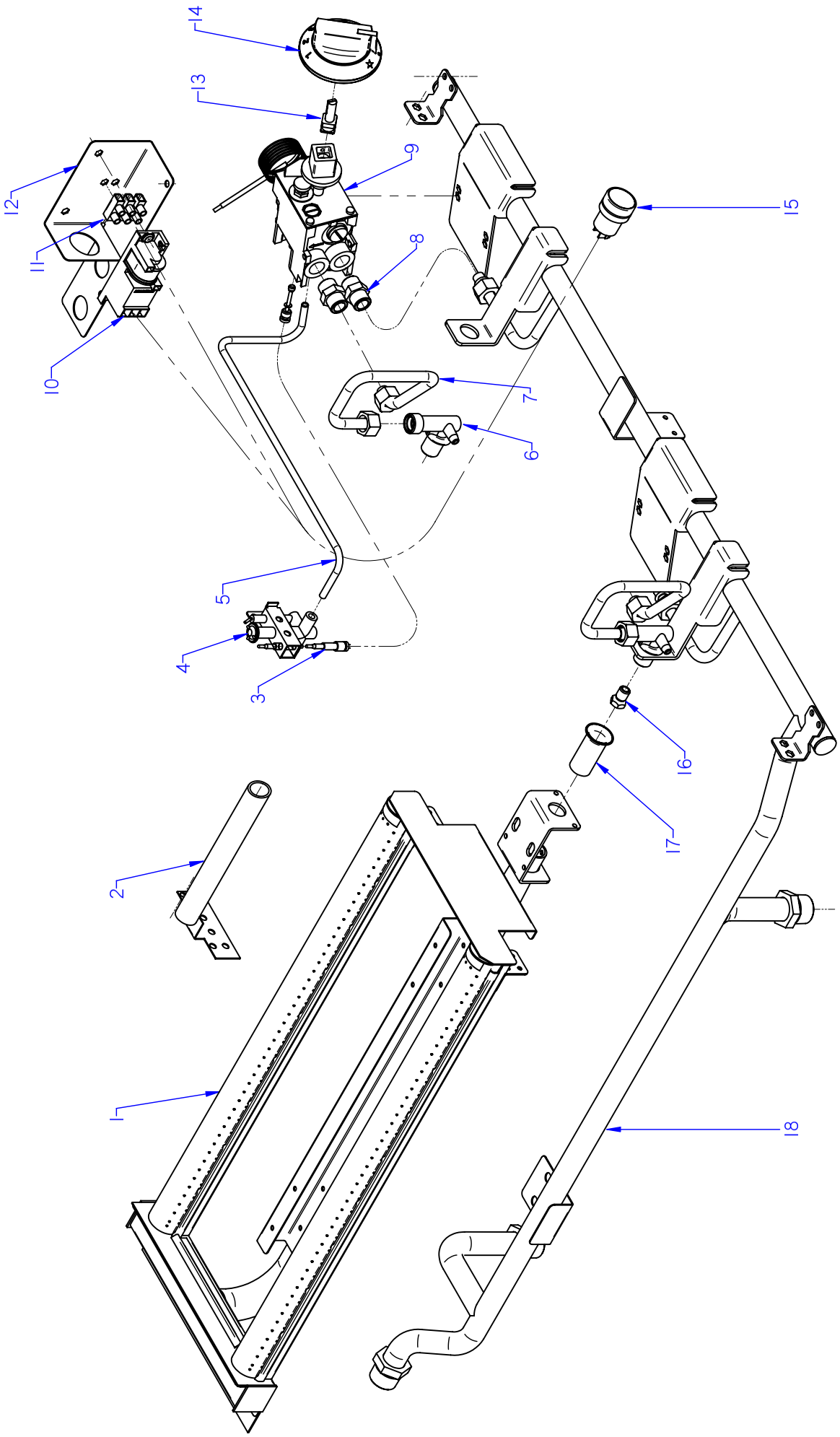

ITEM MARCADO EN COLOR = REPUESTO RECOMENDADO
COLOURED ITEM = RECOMMENDED SPARE PART

Nº plano / N º plane	Firma	Fecha / Date	Denominación / Denomination: PARTE FUNCIONAL / FUNCTIONAL PART	Lamina / Sheet	
C-2901		2011-10	FRY-TOP FTG9-05 / 10 PLUS	2	Fagor Industrial S.Coop. FAGOR Oñate

MOD.	FRY-TOP	ZONA / ZONE	PARTE FUNCIONAL / FUNCTIONAL PART	PLANO DIAGRAM	C-2901

ITEM	CODIGO REFERENCE	DENOMINACION	DENOMINATION	FTG9-05 PLUS	FTG9-10 PLUS							ELIMINADO ELIMINATED	INTRODUCID. INTRODUCED	NOTAS
1	R635700000	QUEMADOR COMPLETO FTG9-00	COMPLETE BURNER FTG-710	1	2									
	Q012031000	TORNILLO EXAGONAL M5x10 A304	HEXAGONAL BOLT M5X10 A304	2	4									
	Q302022000	ARANDELA 16x6x1,2 A304	HEXAGONAL BOLT M5X10 A304	2	4									
2	R045024000	TUBO ENCENDIDO COMPLETO	COMPLETE IGNITION PIPE	1	2									
S/Nº	X082831000	TAPA TUBO ENCENDIDO COMPLET	FULL COVER ON TUBE	1	2							31,03,12		
3	U562130000	TERMOPAR L=850	THERMOCOUPLE L=850	1	2									
4	U322118000	PILOTO COMPLETO 100.062	COMPLETE PILOT LIGHT 100.062	1	2									
	U442137000	INYECTOR Ø 0.4 GN	INJECTOR Ø 0.4 GN.	1	2									
	Q012031000	TORNILLO EXAGONAL M5X10 A.304	HEXAGONAL BOLT M5X10 A.304	2	4									
S/Nº	X022131000	BUJIA	SPARK PLUG	1	2									
5	R065042000	TUBO PILOTO EUROSIT	PILOT PIPE EUROSIT	1	2									
6	U915014000	PORTATOBERAS HORNO	NOZZLE HOLDER	1	2									
	Q223019000	TUERCA 3/8 GAS LATÓN	NUT 3/8 GAS BRASS	1	2									
	Q301323000	ARANDELA Ø25X17X6	WASHER Ø25X17X6	1	2									
	Q306062000	ARANDELA Ø13,9X10,33X1,5	WASHER Ø13,9X10,33X1,5	1	2									
	Q153002000	TORNILLO TAPON	CAP BOLT	1	2									
7	R065031000	CONDUCC. QUEMADOR EUROSIT	BURNER PIPE EUROSIT	1	2									
	Q306062000	ARANDELA Ø13,9X10,33x1,5	WASHER Ø13.9X10.33x1.5	2	4									
8	R155068000	MANGUITO 3/8"	HOSE 3/8"	2	4									
9	R152102000	VALVULA 630 EUR 630.343 META	VALVE 630 EUR 630.343 META	1	2									
	T982102000	TAPON 3/8 972.061	CAP 3/8 972.061	2	4									
	Q011338000	TORNILLO EXAGONAL M5X60	HEXAGONAL SCREW M5X60	2	4									
10	X163014000	ENCENDEDOR PARA 2 BUJIAS	LIGHTER FOR 2 PLUGS	1	1									
11	Z713035000	REGLETA 6MM	C6MM STRIP	1	1									
12	R042634000	SOPORTE CONEXIÓN	SUPPORT CONNECTION	1	1							10,09,12		
12	12045050	SOPORTE TREN-CHISPAS AD	SUPPORT SPARKS PLUG	1	1								10,09,12	
S/Nº	12045051	TAPA TREN-CHISPAS	CAP SPARKS PLUG	1	1								04,06,12	
13	R062102000	EJE BOTON MANDO EUROSIT MET	CTRL. BUTTN. SHAFT EUROSIT M	1	2									
	Q012031000	TORNILLO EXAGONAL M5X10 A304	HEXAGONAL BOLT M5X10 A304	1	2									
14	R042102000	BOTON DE MANDO FTG EUR	CONTROL BUTTON FTG EUR	1	2									
15	T723009000	PULSADOR SERIE MICRO	MICRO SWITCH SERIES	1	1									

MOD.	FRY-TOP	ZONA / ZONE	PARTE FUNCIONAL / FUNCTIONAL PART	PLANO DIAGRAM	C-2901

ITEM	CODIGO REFERENCE	DENOMINACION	DENOMINATION	FTG9-05 PLUS	FTG9-10 PLUS							ELIMINADO ELIMINATED	INTRODUCID. INTRODUCED	NOTAS
16	9105100000	TOBERA Ø 1,50 B.P.	NOZZLE Ø 1,50 B.P.	1	2									
16	U052401000	TOBERA Ø 1,45 B.P	NOZZLE Ø 1,45 B.P	1	2									SOLO CROMO DURO
16	1011600000	TOBERA Ø 2,25 G.N.	NOZZLE Ø 2,25 G.N.	1	2									
16	U262400000	TOBERA Ø 2,15 G.N.	NOZZLE Ø 2,15 G.N.	1	2									SOLO CROMO DURO
17	U325707000	REGULADOR DE AIRE	AIR REGULATOR	1	2									
	Q012031000	TORNILLO EXAGONAL M5x10 A304	HEXAGONAL BOLT M5X10 A304	1	2									
18	R045017000	DISTRIBUCION FTG9-05 EUR	DISTRIBUTION FTG9-05 EUR	1	_									
18	R065037000	DISTRIBUCION FTG9-10 EUR	DISTRIBUTION FTG9-10 EUR	_	1									
	Q152004000	TORN. APLASTADO M5x13 A304	FLAT HEADED SCREW M5x13	2	2									
	Q162030000	TUERCA EXAGONAL M5	HEXAGONAL NUT M5	2	2									
	Q262030000	ARANDELA GROW. A5 A.304	WASHER GROW. A6 A.304	2	2									

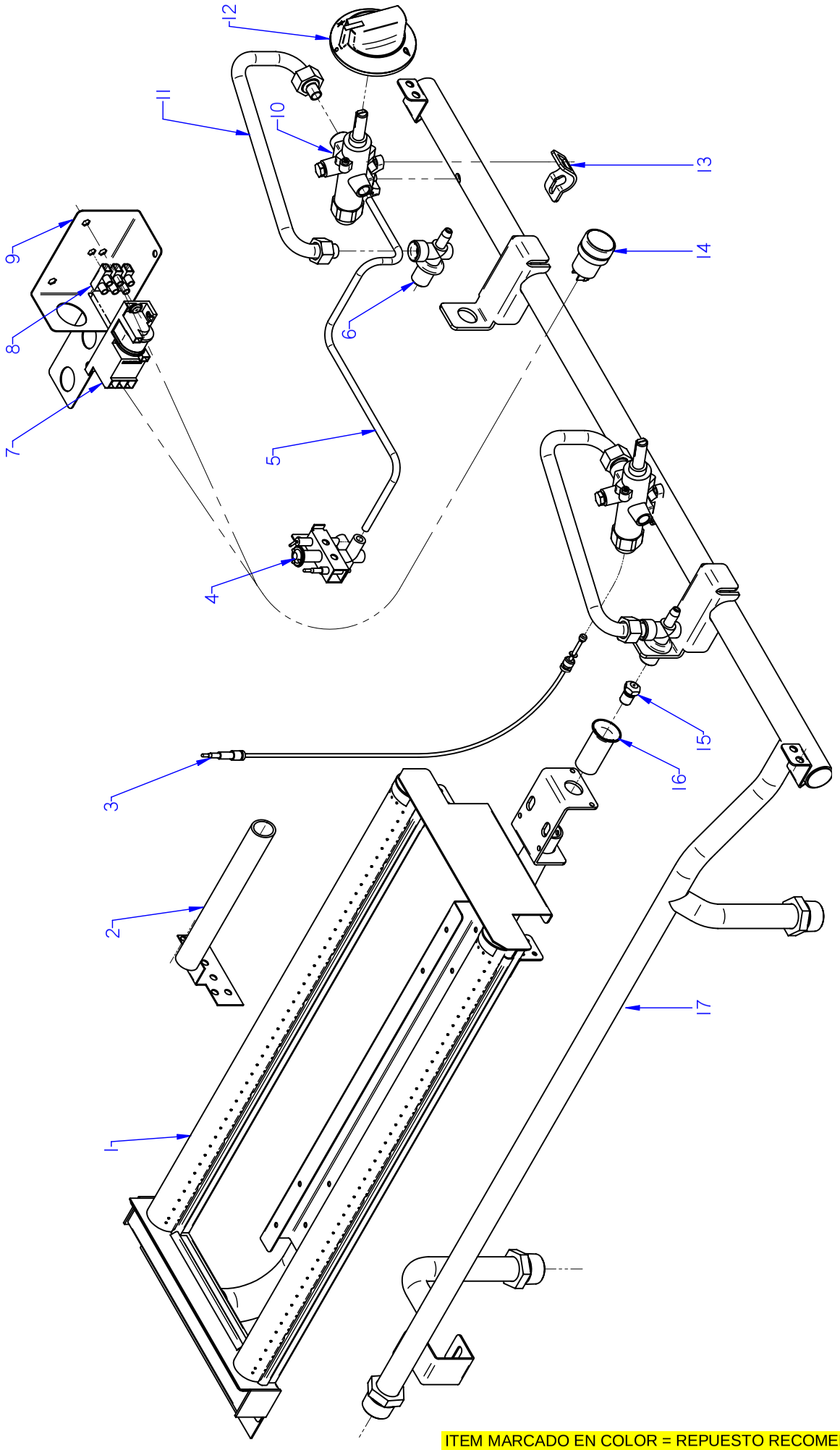

ITEM MARCADO EN COLOR = REPUESTO RECOMENDADO
COLOURED ITEM = RECOMMENDED SPARE PART

Nº plano / N º plane	Firma	Fecha / Date	Denominación / Denomination: PARTE FUNCIONAL / FUNCTIONAL PART	Lamina / Sheet	
C-2902		2011-10	FRY-TOP FTG9-05 / 10 PLUS V	3	Fagor Industrial S.Coop. FAGOR Onate

MOD.	FRY-TOP	ZONA / ZONE	PARTE FUNCIONAL / FUNCTIONAL PART	PLANO DIAGRAM	C-2902

ITEM	CODIGO REFERENCE	DENOMINACION	DENOMINATION	FTG9-05 PLUS V	FTG9-10 PLUS V							ELIMINADO ELIMINATED	INTRODUCID. INTRODUCED	NOTAS
1	R635700000	QUEMADOR COMPLETO FTG9-00	COMPLETE BURNER FTG-710	1	2									
	Q012031000	TORNILLO EXAGONAL M5x10 A304	HEXAGONAL BOLT M5X10 A304	2	4									
	Q302022000	ARANDELA 16x6x1,2 A304	HEXAGONAL BOLT M5X10 A304	1	4									
2	R045024000	TUBO ENCENDIDO COMPLETO	COMPLETE IGNITION PIPE	1	2									
S/Nº	X082831000	TAPA TUBO ENCENDIDO COMPLET	FULL COVER ON TUBE	1	2									
3	U562130000	TERMOPAR L=850	THERMOCOUPLE L=850	1	2									
4	U322118000	PILOTO COMPLETO 100.062	COMPLETE PILOT LIGHT 100.062	1	2									
	U442137000	INYECTOR Ø 0.4 GN	INJECTOR Ø 0.4 GN.	1	2									
	Q012031000	TORNILLO EXAGONAL M5X10 A.304	HEXAGONAL BOLT M5X10 A.304	2	4									
S/Nº	X022131000	BUJIA	SPARK PLUG	1	2									
5	R065043000	TUBO PILOTO	PILOT PIPE	1	2									
	X205028000	BICONO Ø6	BICONE Ø6	_	2									
6	U915014000	PORTATOBERAS HORNO	NOZZLE HOLDER	1	2									
	Q223019000	TUERCA 3/8 GAS LATÓN	NUT 3/8 GAS BRASS	1	2									
	Q301323000	ARANDELA Ø25X17X6	WASHER Ø25X17X6	1	2									
	Q306062000	ARANDELA Ø13,9X10,33X1,5	WASHER Ø13,9X10,33X1,5	1	2									
	Q153002000	TORNILLO TAPON	CAP BOLT	1	2									
7	X163014000	ENCENDEDOR PARA 2 BUJIAS	LIGHTER FOR 2 PLUGS	1	1									
8	Z713035000	REGLETA 6MM	C6MM STRIP	1	1									
9	R042634000	SOPORTE CONEXIÓN	SUPPORT CONNECTION	1	1									
10	R902102000	GRIFO 18700 BY-PASS 0,9	TAP 18700 BY-PASS 0.9	1	2									
	Q307034000	JUNTA ESTANQUEIDAD	SEAL	1	2									
	Q012033000	TORNILLO EXAGONAL M5X20 A304	HEXAGONAL BOLT M5X20 A304	1	2									
11	R065035000	CONDUCCION QUEMADOR V FTG	BURNER PIPE V FTG	1	2									
	Q306062000	ARANDELA Ø13,9X10,33x1,5	WASHER Ø13.9X10.33x1.5	2	4									
12	U022117000	BOTON DE MANDO Ø8	CONTROL BUTTON Ø8	1	2									
13	U912104000	BRIDA AMARRE GRIFO 1/2"	TAP FASTENING FLANGE 1/2"	1	2									
	Q122032000	TORNILLO ALLEN M.5x15	ALLEN HEAD SCREW M.5x15	2	4									
14	T723009000	PULSADOR SERIE MICRO	MICRO SWITCH SERIES	1	1									
15	9105100000	TOBERA Ø 1,50 B.P.	NOZZLE Ø 1,50 B.P.	1	2									
15	1011600000	TOBERA Ø 2,25 G.N.	NOZZLE Ø 2,25 G.N.	1	2									

MOD.	FRY-TOP	ZONA / ZONE	PARTE FUNCIONAL / FUNCTIONAL PART	PLANO DIAGRAM	C-2902

ITEM	CODIGO REFERENCE	DENOMINACION	DENOMINATION	FTG9-05 PLUS V	FTG9-10 PLUS V							ELIMINADO ELIMINATED	INTRODUCID. INTRODUCED	NOTAS
16	U325707000	REGULADOR DE AIRE	AIR REGULATOR	1	2									
	Q012031000	TORNILLO EXAGONAL M5x10 A304	HEXAGONAL BOLT M5X10 A304	1	2									
17	R045019000	DISTRIBUCION FTG9-05 V	DISTRIBUTION FTG9-05 V	1	_									
17	R065039000	DISTRIBUCION FTG9-10 V	DISTRIBUTION FTG9-10 V	_	1									
	Q221342000	REMACHE EXAGONAL M5	HEXAGONAL RIVET M5	2	2									
	Q152004000	TORN. APLASTADO M5x13 A304	FLAT HEADED SCREW M5x13	2	2									
	Q162030000	TUERCA EXAGONAL M5	HEXAGONAL NUT M5	2	2									
	Q262030000	ARANDELA GROW. A5 A.304	WASHER GROW. A6 A.304	2	2									

MOD.	FRY-TOP	ZONA / ZONE	VARIOS / MISCELLANEOUS	PLANO DIAGRAM	

ITEM	CODIGO REFERENCE	DENOMINACION	DENOMINATION	FTG9-05 PLUS	FTG9-10 PLUS	FTG9-05 PLUS V	FTG9-10 PLUS V					ELIMINADO ELIMINATED	INTRODUCID. INTRODUCED	NOTAS
	R046501000	FOLLETO DE INSTRUCC. FTG 700	INSTRUCTION LEAFLET FTG 700	1	1	1	1							
	R636500000	RASQUETA MARTOR	MARTOR SCRAPER	1	1	_	_							SOLO CROMO DURO
	U023001000	ESQUEMA TEORICO ADHESIVO AD	THEOR. DIAGRAM LABEL AD	1	1	1	1							PLANO HB-80558
	U323007000	CABLE ENCENDEDOR A BUJIA	LIGHTER TO SPARK PLUG CAB.	1	2	1	2							
	U963006000	CABLE. ENCENDEDOR ENCIMERA	TOP LIGHTER WIRING	1	1	1	1							
	Z603041000	CABLE ALIMENTACION	POWER WIRING	1	1	1	1							

MOD.	FRY-TOP	ZONA / ZONE	REPUESTOS RECOMENDADOS RECOMMENDED SPARE PART	PLANO DIAGRAM	

ITEM	CODIGO REFERENCE	DENOMINACION	DENOMINATION	FTG9-05 PLUS	FTG9-10 PLUS	FTG9-05 PLUS V	FTG9-10 PLUS V					ELIMINADO ELIMINATED	INTRODUCID. INTRODUCED	NOTAS
3	U562130000	TERMOPAR L=850	THERMOCOUPLE L=850	1	2	_	_							C-2901
4	U322118000	PILOTO COMPLETO 100.062	COMPLETE PILOT LIGHT 100.062	1	2	_	_							C-2901
	U442137000	INYECTOR Ø 0.4 GN	INJECTOR Ø 0.4 GN.	1	2	_	_							C-2901
	Q012031000	TORNILLO EXAGONAL M5X10 A.304	HEXAGONAL BOLT M5X10 A.304	2	4	_	_							C-2901
S/Nº	X022131000	BUJIA	SPARK PLUG	1	2	_	_							C-2901
9	R152102000	VALVULA 630 EUR 630.343 META	VALVE 630 EUR 630.343 META	1	2	_	_							C-2901
10	X163014000	ENCENDEDOR PARA 2 BUJIAS	LIGHTER FOR 2 PLUGS	1	1	_	_							C-2901
15	T723009000	PULSADOR SERIE MICRO	MICRO SWITCH SERIES	1	1	_	_							C-2901
4	U322118000	PILOTO COMPLETO 100.062	COMPLETE PILOT LIGHT 100.062	_	_	1	2							C-2902
	U442137000	INYECTOR Ø 0.4 GN	INJECTOR Ø 0.4 GN.	_	_	1	2							C-2902
S/Nº	X022131000	BUJIA	SPARK PLUG	_	_	1	2							C-2902
7	X163014000	ENCENDEDOR PARA 2 BUJIAS	LIGHTER FOR 2 PLUGS	_	_	1	1							C-2902
10	R902102000	GRIFO 18700 BY-PASS 0,9	TAP 18700 BY-PASS 0.9	_	_	1	2							C-2902
14	T723009000	PULSADOR SERIE MICRO	MICRO SWITCH SERIES	_	_	1	1							C-2902

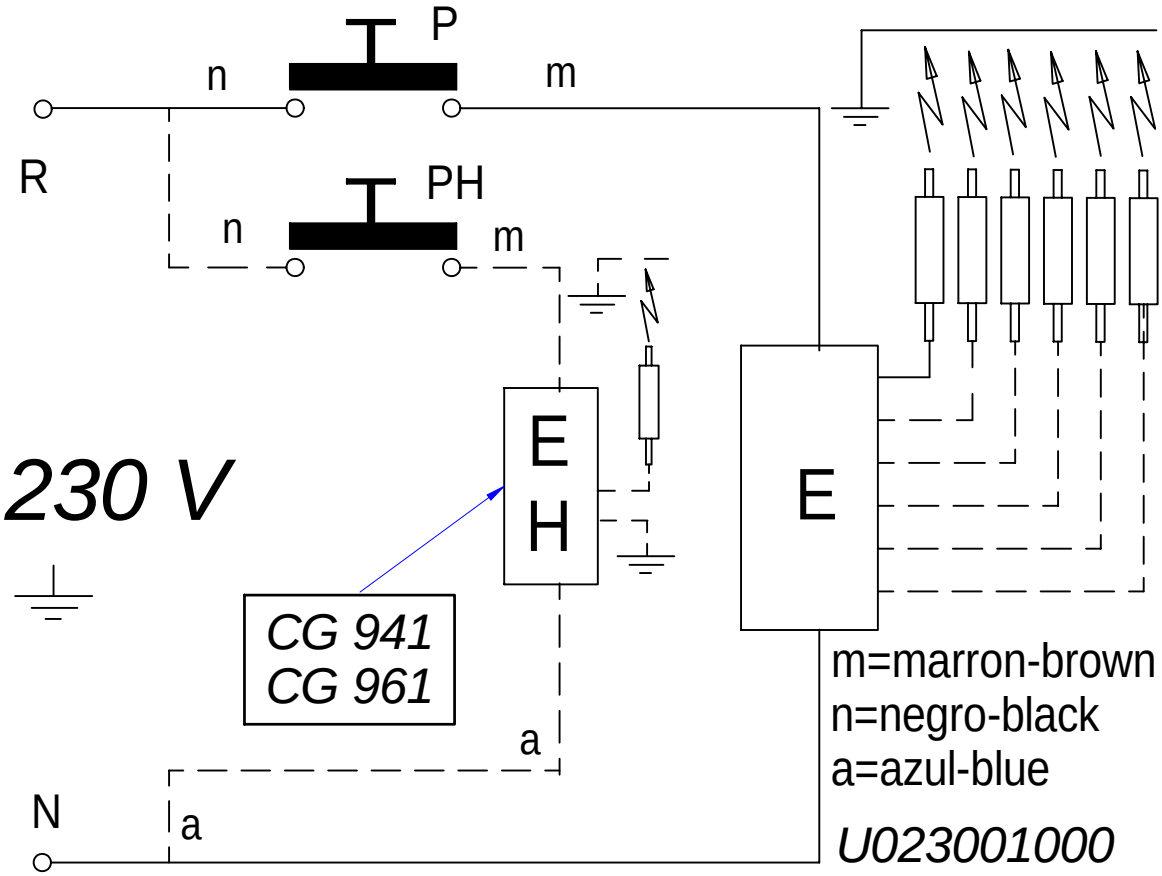

-	Eskema teorikoa: ADVANCE	-	-	U023001000	-
Zk./Nº	Pieza	Cant.	Materiala/Material	Klas. zk/Nº Clas.	Gainazal akabera/Tratamiento
Zk./Nº	Aldaketa/Modificaciones		Nork proposatua/Propuesta de	Data/Fecha	Perdoi orokorrak Tolerancias generales
-	-		-	-	
-	-		-	-	< 5 ± 0.2 / 50 ÷ 100 ± 0.8
-	-		-	-	5 ÷ 25 ± 0.4 / >100 ± 1
-	-		-	-	25 ÷ 50 ± 0.6 / α ± 1
-	-		-	-	

	Sinadura/Firma	Data/Fecha		Gainazal perdoia Mecanizado superficial
Marraztua/Dibujado	**e.carrascal**	**2008-11-25**	FAGOR Fagor Industrial,Koop.Elk, Mugatua	—
Proiektatua/Proyectado	**e.carrascal**	**2008-11-25**		
Egiaztatua/Comprobado	I.Alberdi	**2008-11-25**		

Eskala/Escala	EGOSKETA	Plano Zk./Plano Nº
-		HB-80558
		- Zk. ord. du
	Plano hau ezin daiteke erabili, ez berriztatu, gure baimenik gabe.	- Zk.gaitik ord.