DESPIECE TECNICO

Cocinas a Gas
Gas ranges
Fourneaux à gaz
Gas-herde
Cucine a gas
Fogão a gás

GAMA 900

Modelos:

CGF9-120 PLUS
CGF9-121 PLUS

Octubre 2011 October

Revisado Junio 2013 June Revised

FAGOR

FAGOR INDUSTRIAL

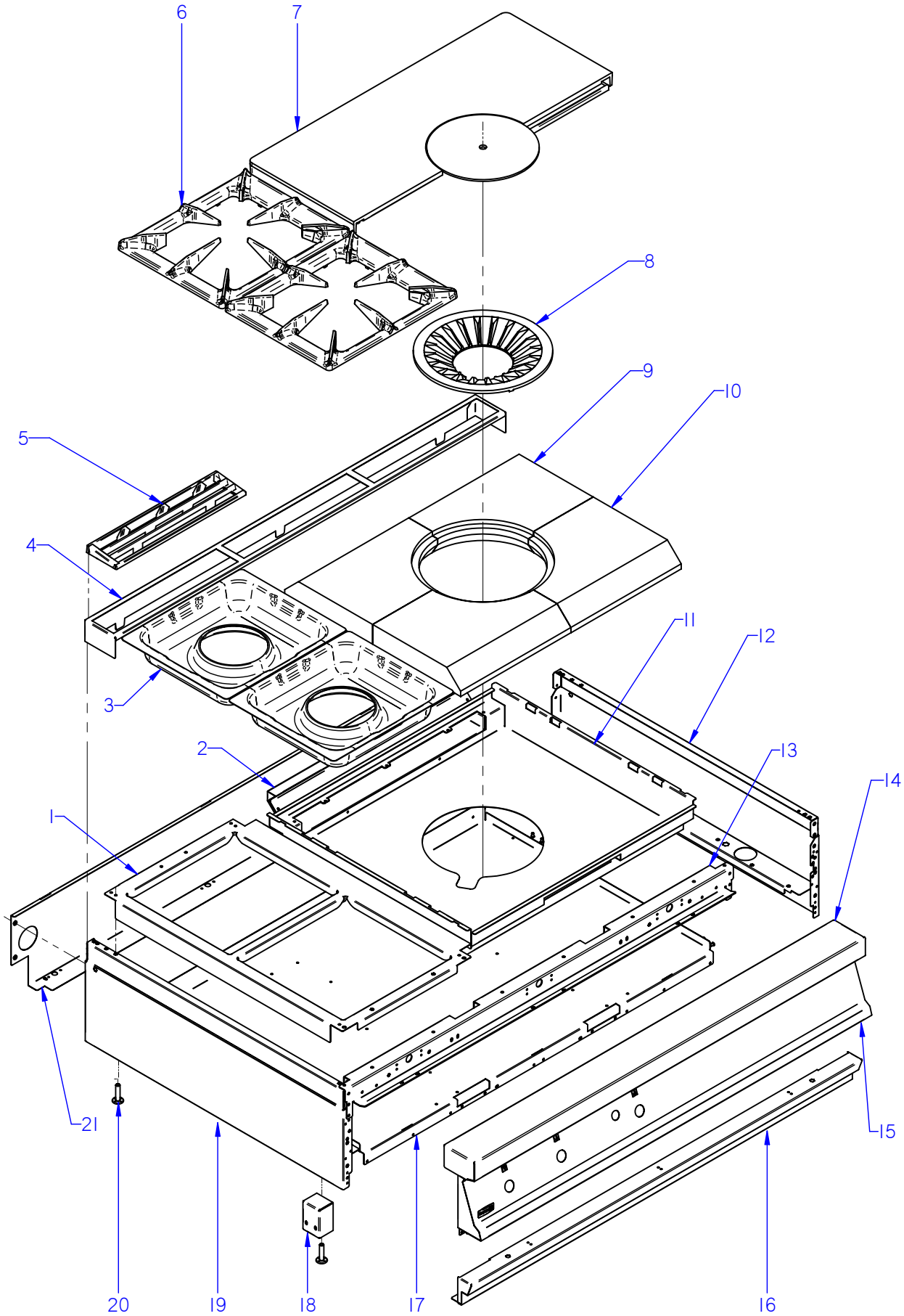

ITEM MARCADO EN COLOR = REPUESTO RECOMENDADO
COLOURED ITEM = RECOMMENDED SPARE PART

Nº plano / N º plane	Firma	Fecha / Date	Denominación / Denomination: MUEBLE / FITTING	Lamina / Sheet	
C-2880		2011-10	COCINA CGF9-120 PLUS	1	Fagor Industrial S.Coop. FAGOR Oñate

MOD.	COCINAS / RANGES	ZONA / ZONE	MUEBLE / FITTING	PLANO DIAGRAM	C-2880

ITEM	CODIGO REFERENCE	DENOMINACION	DENOMINATION	CGF9-120 I PLUS	CGF9-120 D PLUS							ELIMINADO ELIMINATED	INTRODUCID. INTRODUCED	NOTAS
1	U205411000	MESA CGF9-121 I	BENCH CGF9-121 I	1	_									
1	U205410000	MESA CGF9-121 D	BENCH CGF9-121 D	_	1									
	Q152004000	TORNIL, APLASTADO M5x13 A304	FLAT HEADED BOLT M5x13 A304	10	10									
	Q221342000	REMACHE EXAGONAL M5	HEXAGONAL RIVET M5	4	4									
2	U962664000	ANTERIOR DE CHIMENEA AD	FLUEPIPE FRONT AD	1	1									
S/Nº	U962665000	POSTERIOR CHIMENEA AD	REAR FLUEPIPE AD	1	1									
	Q419005000	REMACHE 4x8 ALMG3 / ALUMINIO	RIVET 4X8 ALMG3 / ALUMINIUM	11	11									
3	U025473000	BACINETA QUEMADOR G900	BASIN BURNER G900	2	2									
4	R205440000	SOPORTE EMBELLECEDOR 1,5 M	TRIM SUPPORT 1.5 M	1	1									
5	R205425000	EMBELLECEDOR ESMALTE	ENAMEL TRIM	3	3									
6	U035409000	PARRILLA GAMA 900	GRILL 900 RANGE	2	2									
7	U025455000	CONJ.MEDIA PLACA + RODELA	MEDIUM PLATE + GUIDE RING	2	2									
8	U195420000	RODELA DIFUSORA FG-8	DISPENSER GUIDE RING FG-8	1	1									
9	U615408000	REFRACTARIO DERECHO	RIGHT REFRACTORY	2	2									
10	U615407000	REFRACTARIO IZQUIERDO	LEFT REFRACTORY	2	2									
11	U962661000	CAJON REFRACTARIO AD	REFRACTORY DRAWER AD	1	1									
12	R062810000	PANEL LATERAL DERECHO G900	RIGHT SIDE PANEL G900	1	1									
	Q221342000	REMACHE EXAGONAL M5	HEXAGONAL RIVET M5	8	8									
13	U962607000	ESCUA INTER AMAR ANTE 1,5 M	BRACKET INTER FASTE. FRONT	1	1									
	Q221342000	REMACHE EXAGONAL M5	HEXAGONAL RIVET M5	4	4									
	Q012032000	TORNILLO EXAGONAL M5x15	HEXAGONAL BOLT M5x15	4	4									
	Q152004000	TORNIL, APLASTADO M5x13 A304	FLAT HEADED BOLT M5x13 A304	6	6									
	Q302022000	ARANDELA 16x6x1,2 A304	WASHER 16x6x1.2 A304	6	6									
14	U965402000	ANTERIOR MESA 1,5 M AD	BENCH FRONT 1.5 M AD	1	1									
	Q152004000	TORNIL, APLASTADO M5x13 A304	FLAT HEADED BOLT M5x13 A304	2	2									
	Q302022000	ARANDELA 16x6x1,2 A304	WASHER 16x6x1.2 A304	2	2									
15	U962814000	PORTAMANDOS CGF9-120 I AD	CONTROL HOLDER CGF9-120 I	1	_									
15	U962808000	PORTAMANDOS CGF9-120 D AD	CONTROL HOLDER CGF9-120 D	_	1									
	U022836000	ESCUDO FAGOR	FAGOR EMBLEM	1	1									
	Q221023000	CLIP SUJECIÓN RÁPIDA Ø5	RAPID CONNECT CLIP Ø5	2	2									
	Q152004000	TORNIL, APLASTADO M5x13 A304	FLAT HEADED BOLT M5x13	4	4									

MOD.	COCINAS / RANGES	ZONA / ZONE	MUEBLE / FITTING	PLANO DIAGRAM	C-2880

ITEM	CODIGO REFERENCE	DENOMINACION	DENOMINATION	CGF9-120 I PLUS	CGF9-120 D PLUS							ELIMINADO ELIMINATED	INTRODUCID. INTRODUCED	NOTAS
16	U032809000	ZOCALO 1,5 M	SKIRTING 1.5 M	1	1									
	Q419005000	REMACHE 4x8 ALMG3 / ALUMINIO	RIVET 4X8 ALMG3 / ALUMINIUM	2	2									
17	U962639000	BASE CG9-60 AD	BASE CG9-60 AD	1	1									
	Q419005000	REMACHE 4x8 ALMG3 / ALUMINIO	RIVET 4X8 ALMG3 / ALUMINIUM	16	16									
18	H012805000	ESCUADRA AMARRE PATA	LEG FASTENING BRACKET	2	2									
	Q162030000	TUERCA EXAGONAL M5	HEXAGONAL NUT M5	4	4									
	Q302022000	ARANDELA 16x6x1,2 A304	WASHER 16x6x1.2 A304	4	4									
	Q221345000	REMACHE EXAGONAL M10	HEXAGONAL RIVET M10	2	2									
19	R062811000	PANEL LATERAL IZQUIERDO G900	LEFT SIDE PANEL G900	1	1									
	Q221342000	REMACHE EXAGONAL M5	HEXAGONAL RIVET M5	3	3									
	Q221343000	REMACHE EXAGONAL M6	HEXAGONAL RIVET M6	5	5									
20	Z200107000	PATA	LEG	4	4									
	Q221345000	REMACHE EXAGONAL M10	HEXAGONAL RIVET M10	4	4									
S/Nº	X010503000	CIERRE MUELLE	LOCK SPRING	4	4									
	Q419007000	REMACHE TUBULAR C/V Ø2x6	TUBULAR RIVET C/V Ø2x6	8	8									
21	U962644000	PANEL POSTERIOR 1,5 M	REAR PANEL 1.5 M	1	1									
	Q419005000	REMACHE 4x8 ALMG3 / ALUMINIO	RIVET 4X8 ALMG3 / ALUMINIUM	4	4									
	Q302022000	ARANDELA 16x6x1,2 A304	WASHER 16x6x1.2 A304	4	4									

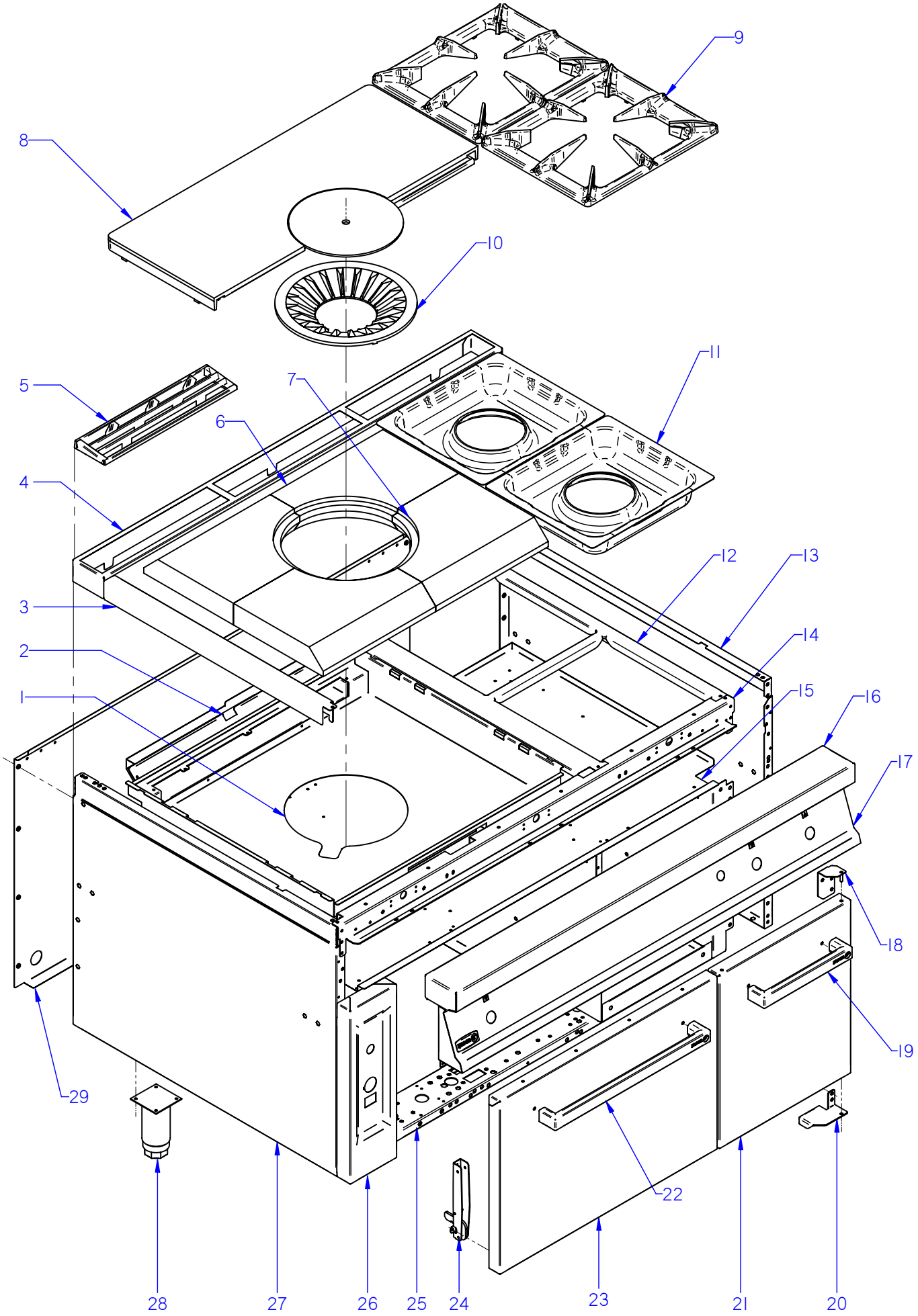

ITEM MARCADO EN COLOR = REPUESTO RECOMENDADO
COLOURED ITEM = RECOMMENDED SPARE PART

Nº plano / N º plane	Firma	Fecha / Date	Denominación / Denomination: MUEBLE / FITTING	Lamina / Sheet	
C-2881		2011-10	COCINA CGF9-121 PLUS	2	Fagor Industrial S.Coop. FAGOR Oñate

MOD.	COCINAS / RANGES	ZONA / ZONE	MUEBLE / FITTING	PLANO DIAGRAM	C-2881

ITEM	CODIGO REFERENCE	DENOMINACION	DENOMINATION	CGF9-121 I PLUS	CGF9-121 D PLUS							ELIMINADO ELIMINATED	INTRODUCID. INTRODUCED	NOTAS
1	U962661000	CAJON REFRACTARIO AD	REFRACTORY DRAWER AD	1	1									
2	U962664000	ANTERIOR DE CHIMENEA AD	FLUEPIPE FRONT AD	1	1									
S/Nº	U962665000	POSTERIOR CHIMENEA AD	REAR FLUEPIPE AD	1	1									
	Q419005000	REMACHE 4x8 ALMG3 / ALUMINIO	RIVET 4X8 ALMG3 / ALUMINIUM	11	11									
3	R152807000	LATERAL DE MESA	SIDE BENCH	2	2									
4	R205440000	SOPORTE EMBELLECEDOR 1,5 M	TRIM SUPPORT 1.5 M	1	1									
5	R205425000	EMBELLECEDOR ESMALTE	ENAMEL TRIM	3	3									
6	U615408000	REFRACTARIO DERECHO	RIGHT REFRACTORY	2	2									
7	U615407000	REFRACTARIO IZQUIERDO	LEFT REFRACTORY	2	2									
8	U025455000	CONJ.MEDIA PLACA + RODELA	MEDIUM PLATE + GUIDE RING	2	2									
9	U035409000	PARRILLA GAMA 900	GRILL 900 RANGE	2	2									
10	U195420000	RODELA DIFUSORA FG-8	DISPENSER GUIDE RING FG-8	1	1									
11	U025473000	BACINETA QUEMADOR G900	BASIN BURNER G900	2	2									
12	U205411000	MESA CGF9-121 I	BENCH CGF9-121 I	1	_									
12	U205410000	MESA CGF9-121 D	BENCH CGF9-121 D	_	1									
	Q152004000	TORNIL, APLASTADO M5x13 A304	FLAT HEADED BOLT M5x13 A304	10	10									
	Q221342000	REMACHE EXAGONAL M5	HEXAGONAL RIVET M5	4	4									
13	X162814000	PANEL LATERAL DERECHO G9-00	RIGHT SIDE PANEL G9-00	1	1									
	Q221343000	REMACHE EXAGONAL M6	HEXAGONAL RIVET M6	11	11									
	Q221342000	REMACHE EXAGONAL M5	HEXAGONAL RIVET M5	11	11									
	Q012043000	TORNILLO EXAGONAL M6x20 A304	HEXAGONAL BOLT M6x20 A304	2	2									
	Q152004000	TORNILLO APLASTADO M5x13 A30	FLAT HEADED BOLT M5x13 A304	3	3									
14	U962607000	ESCUA INTER AMAR ANTE 1,5 M	BRACKET INTER FASTE. FRONT	1	1									
	Q221342000	REMACHE EXAGONAL M5	HEXAGONAL RIVET M5	4	4									
	Q012032000	TORNILLO EXAGONAL M5x15	HEXAGONAL BOLT M5x15	4	4									
	Q152004000	TORNIL, APLASTADO M5x13 A304	FLAT HEADED BOLT M5x13 A304	6	6									
	Q302022000	ARANDELA 16x6x1,2 A304	WASHER 16x6x1.2 A304	6	6									
15	U962604000	BASE BANDEJAS 1,5 M	TRAY BASE 1.5 M	1	1									
	Q419005000	REMACHE 4x8 ALMG3 / ALUMINIO	RIVET 4X8 ALMG3 / ALUMINIUM	2	2									
	Q152004000	TORNIL, APLASTADO M5x13 A304	FLAT HEADED BOLT M5x13 A304	3	3									

MOD.	COCINAS / RANGES	ZONA / ZONE	MUEBLE / FITTING	PLANO DIAGRAM	C-2881

ITEM	CODIGO REFERENCE	DENOMINACION	DENOMINATION	CGF9-121 I PLUS	CGF9-121 D PLUS							ELIMINADO ELIMINATED	INTRODUCID. INTRODUCED	NOTAS
16	U965402000	ANTERIOR MESA 1,5 M AD	BENCH FRONT 1.5 M AD	1	1							30.11.12		
16	12007213	ANTERIOR MESA 1,5 M PLUS	BENCH FRONT 1.5 M PLUS	1	1								30.11.12	
	Q152004000	TORNIL, APLASTADO M5x13 A304	FLAT HEADED BOLT M5x13 A304	2	2									
	Q302022000	ARANDELA 16x6x1,2 A304	WASHER 16x6x1.2 A304	2	2									
17	U962816000	PORTAMANDOS CGF9-121 I AD	CONTROL HOLDER CGF9-121 I	1	_									
17	U962818000	PORTAMANDOS CGF9-121 D AD	CONTROL HOLDER CGF9-121 D	_	1									
	U022836000	ESCUDO FAGOR	FAGOR EMBLEM	1	1									
	Q221023000	CLIP SUJECIÓN RÁPIDA Ø5	RAPID CONNECT CLIP Ø5	2	2									
	Q152004000	TORNIL, APLASTADO M5x13 A304	FLAT HEADED BOLT M5x13 A304	4	4									
18	U962613000	BISAGRA SUPERIOR DERECHA	UPPER RIGHT HINGE	1	1									
	Q221342000	REMACHE EXAGONAL M5	HEXAGONAL RIVET M5	1	1									
19	Z710558000	ASA CAPOTA AD	AD HOOD HANDLE	1	1									
	Q162040000	TUERCA EXAGONAL M6	HEXAGONAL NUT M6	1	1									
	Q302022000	ARANDELA 16x6x1,2 A304	WASHER 16x6x1.2 A304	1	1									
20	U020511000	BISAGRA DERECHA INFERIOR	LOWER RIGHT HINGE	1	1									
	Q232040000	ARANDELA A6	WASHER A6	1	1									
	X960504000	TORNILLO DE GIRO M8	ROTATION BOLT M8	1	1									
	Q012042000	TORNILLO EXAGONAL M6x15 A304	HEXAGONAL BOLT M6x15 A304	1	1									
	Q302022000	ARANDELA 16x6x1,2 A304	WASHER 16x6x1.2 A304	1	1									
21	U960501000	PUERTA LATERAL AD	SIDE DOOR AD	1	1									
	Q419005000	REMACHE 4x8 ALMG3 / ALUMINIO	RIVET 4X8 ALMG3 / ALUMINIUM	1	1									
S/Nº	X960501000	IMAN	MAGNET	2	2									
S/Nº	X960502000	FIJACION IMAN	MAGNET ATTACHMENT	2	2									
	Q012021000	TORNILLO EXAGONAL M4X10	HEXAGONAL BOLT M4x10	2	2									
	Q232020000	ARANDELA A4	WASHER A4	2	2									
22	Z900527000	ASA	HANDLE	1	1									
	Q012041000	TORNILLO EXAGONAL M6x10	HEXAGONAL BOLT M6x10	2	2									
	Q302022000	ARANDELA 16x6x1,2 A304	WASHER 16x6x1.2 A304	2	2									
23	U910501000	PUERTA DE HORNO	OVEN DOOR	1	1									
24	U020528000	BISAGRA CIERRE HORNO	OVEN LOCK HINGE	2	2									
	Q152022000	TORNILLO M6x8	BOLT M6x8	6	6									

MOD.	COCINAS / RANGES	ZONA / ZONE	MUEBLE / FITTING	PLANO DIAGRAM	C-2881

ITEM	CODIGO REFERENCE	DENOMINACION	DENOMINATION	CGF9-121 I PLUS	CGF9-121 D PLUS							ELIMINADO ELIMINATED	INTRODUCID. INTRODUCED	NOTAS
25	U962601000	LISTON SOPORTE PATAS 1,5 M AD	LEG SUPPORT STRIP 1.5 M AD	2	2									
26	U962829000	PORTAMAN. LATERAL HORNO AD	OVEN SIDE CONTROL HOLDER	1	1							01,10,12		
26	12046661	PORTAM. LAT. HORNO PLUS MEK	OVEN SIDE CONTROL HOLDER	1	1								01,10,12	
	Q152004000	TORNIL, APLASTADO M5x13 A304	FLAT HEADED BOLT M5x13 A304	2	2									
27	X162813000	PANEL LATERAL IZQUIERDO G900	LEFT SIDE PANEL G900	1	1									
	Q221343000	REMACHE EXAGONAL M6	HEXAGONAL RIVET M6	11	11									
	Q221342000	REMACHE EXAGONAL M5	HEXAGONAL RIVET M5	11	11									
	Q012043000	TORNILLO EXAGONAL M6x20 A304	HEXAGONAL BOLT M6x20 A304	2	2									
	Q152004000	TORNILLO APLASTADO M5x13 A304	FLAT HEADED BOLT M5x13 A304	3	3									
28	X260151000	PATA REGULABLE	ADJUSTABLE LEG	4	4									
	Q411304000	REMACHE AVIBULB Ø 4,8	AVIBULB RIVET Ø 4.8	16	16									
29	U962801000	PANEL POSTERIOR 1,5 M	REAR PANEL 1.5 M	1	1									
	Q419005000	REMACHE 4x8 ALMG3 / ALUMINIO	RIVET 4X8 ALMG3 / ALUMINIUM	8	8									

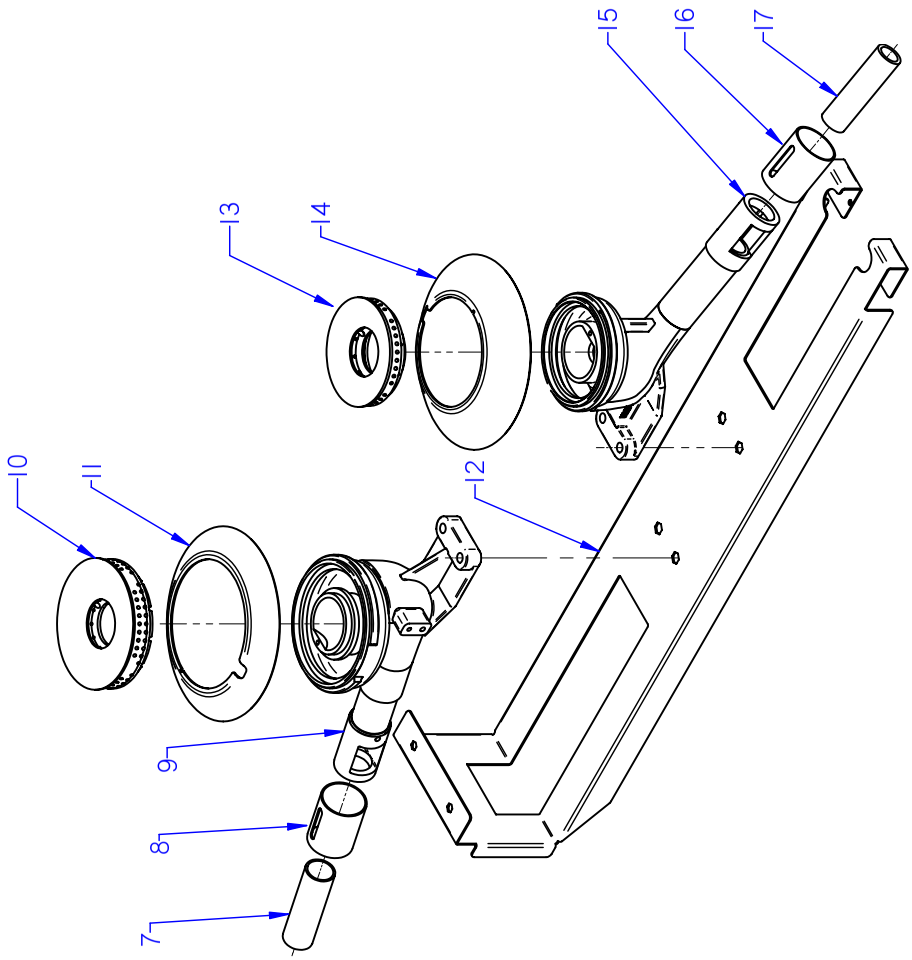

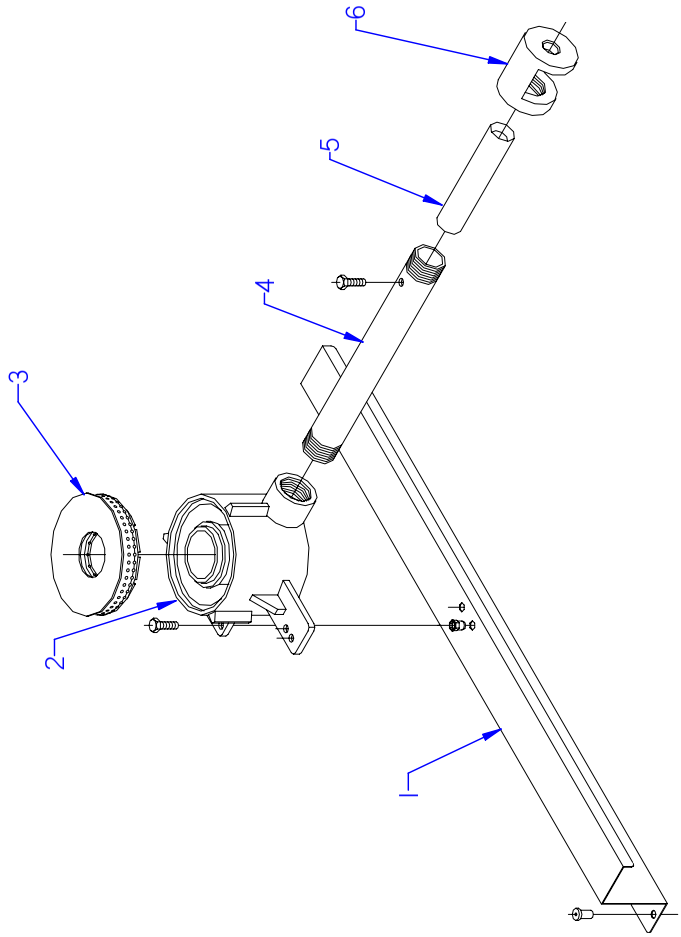

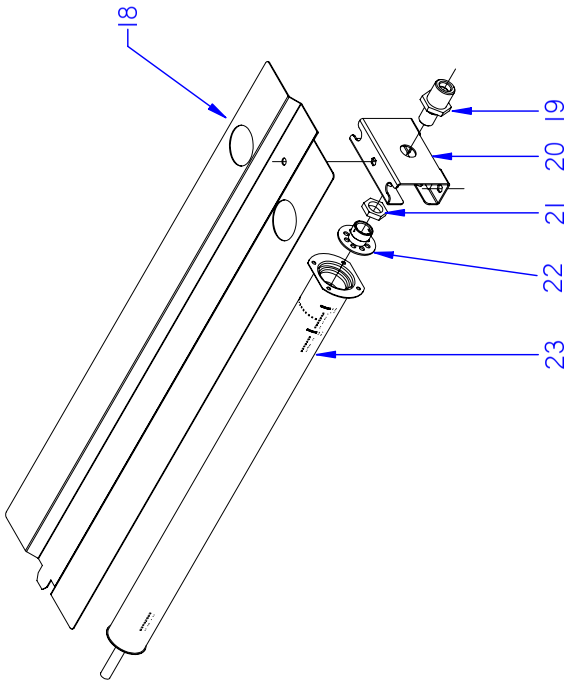

ITEM MARCADO EN COLOR = REPUESTO RECOMENDADO
COLOURED ITEM = RECOMMENDED SPARE PART

Nº plano / N º plane	Firma	Fecha / Date	Denominación / Denomination: QUEMADORES / BURNERS	Lamina / Sheet	
C-2882		2011-10	COCINA CGF9-120 PLUS / 121 PLUS	3	Fagor Industrial S.Coop. FAGOR Oñate

MOD.	COCINAS / RANGES	ZONA / ZONE	QUEMADORES / BURNERS	PLANO DIAGRAM	C-2882

ITEM	CODIGO REFERENCE	DENOMINACION	DENOMINATION	CGF9-120 PLUS	CGF9-121 PLUS							ELIMINADO ELIMINATED	INTRODUCID. INTRODUCED	NOTAS
1	U962660000	SOPORTE QUEMADOR MESA AD	BURNER SUPPORT STRIP AD	1	1									
	Q419005000	REMACHE 4x8 ALMG3 / ALUMINIO	RIVET 4X8 ALMG3 / ALUMINIUM	2	2									
	Q221342000	REMACHE EXAGONAL M5	HEXAGONAL RIVET M5	2	2									
2	U195702000	CUERPO DE QUEMADOR MECANI.	BURNER BODY	1	1									
3	U195701500	QUEMADOR 10850 KCAL. PINTADO	BURNER10850 KCAL.	1	1							10.06.13		
3	12091667	QUEMADOR 11,5 Kw AGUAJER	BURNER 11,5 Kw	1	1								10.06.13	
4	U195703000	TUBO MEZCLADOR	MIXING PIPE	1	1									
	Q223019000	TUERCA 3/8 GAS LATÓN	NUT 3/8 GAS BRASS	1	1									
	Q153002000	TORNILLO TAPON	CAP BOLT	1	1									
5	U775701000	VENTURI QUEMADOR	VENTURI QUEMADOR	1	1									
	Q012031000	TORNILLO EXAGONAL M5x10 A304	HEXAGONAL BOLT M5x10 A304	1	1									
6	U615700500	CAMARA DE MEZCLA PINTADA	PAINT MIXING CHAMBER	1	1									
7	U565700000	VENTURI QUEMADOR 8000	VENTURI BURNER 8000	1	1									
8	U265702000	REGULADOR AIRE	AIR CONTROLLER	1	1									
	Q132054000	VARILLA ROSCADA M6 x 12	THREADED ROD M6 x 12	1	1									
	Q162004000	TUERCA EXAGONAL M6	HEXAGONAL NUT M6	1	1									
9	U025710000	CUERPO QUEMADOR 8000 Kcal/H	BURNER BODY 8000 Kcal/h	1	1									
10	U135702500	QUEMADOR 8000	BURNER 8000	1	1									
	Q371026000	MANGUITO DE SUJECION Ø 4x14	HANDLE Ø 4x14	1	1									
	Q012045000	TORNILLO EXAGONAL M6x30 A304	HEXAGONAL BOLT M6x30 A304	1	1									
	Q302022000	ARANDELA 16x6x1,2 A304	WASHER 16x6x1.2 A304	1	1									
	U565011000	TUERCA GUIA	GUIDE NUT	1	1									
11	U915703000	PROTEC. PILOTO QUEMAD. 7000	BURNER PILOT GUARD 7000	1	1									
	Q372004000	PASADOR ELASTICO 5x20	ELASTIC PIN 5x20	2	2									
12	U962606000	LISTON SOP. QUEMADOR AD	BURNER SUPPORT STRIP	1	1									
	Q221343000	REMACHE EXAGONAL M6	HEXAGONAL RIVET M6	4	4									
	Q221342000	REMACHE EXAGONAL M5	HEXAGONAL RIVET M5	4	4									
13	U445731000	QUEMADOR 4000 (00545-010)	BURNER 4000 (00545-010)	1	1							26,08,12		
13	12039162	QUEMADOR 4000 Kcal/H	BURNER 4000 Kcal/H	1	1								26,08,12	
	Q012045000	TORNILLO EXAGONAL M6x30 A304	HEXAGONAL BOLT M6x30 A304	1	1									
	Q302022000	ARANDELA 16x6x1,2 A304	WASHER 16x6x1.2 A304	1	1									

MOD.	COCINAS / RANGES	ZONA / ZONE	QUEMADORES / BURNERS	PLANO DIAGRAM	C-2882

ITEM	CODIGO REFERENCE	DENOMINACION	DENOMINATION	CGF9-120 PLUS	CGF9-121 PLUS							ELIMINADO ELIMINATED	INTRODUCID. INTRODUCED	NOTAS
14	U025712000	PROTEC. PILOTO QUEMAD. 4000	BURNER PILOT GUARD 4000	1	1									
15	U025709000	CUERPO QUEMADOR 4000Kcal/H	BURNER BODY 4000 Kcal/H	1	1									
	Q371026000	MANGUITO DE SUJECION Ø 4x14	HANDLE Ø 4x14	1	1									
16	U265702000	REGULADOR AIRE	AIR CONTROLLER	1	1									
	Q131542000	VARILLA ROSCADA M6 x 15	THREADED ROD M6 x 15	1	1									
	Q162004000	TUERCA EXAGONAL M6	HEXAGONAL NUT M6	1	1									
17	U125720000	VENTURI QUEMADOR 4000 kcl	VENTURI BURNER 4000 kcl	1	1									
18	U915613000	DEFLECTOR QUEMADOR HORNO	OVEN BURNER DEFLECTOR	_	1									
	Q152004000	TORNIL, APLASTADO M5x13 A304	FLAT HEADED BOLT M5x13 A304	_	1									
	Q302022000	ARANDELA 16x6x1,2 A304	WASHER 16x6x1.2 A304	_	1									
19	X505724000	MANGUITO PORTATOBERAS	NOZZLE HOLDER SLEEVE	_	1									
20	U105635000	AMARRE QUEMADOR HORNO(HG)	OVEN BURNER FASTENING (HG)	_	1									
	Q012031000	TORNILLO EXAGONAL M5x10 A304	HEXAGONAL BOLT M5x10 A304	_	2									
	Q222041000	REMACHE EXAGONAL M4 (INOX)	HEXAGONAL RIVET M4 (INOX)	_	4									
21	Q223019000	TUERCA 3/8 GAS LATÓN	NUT 3/8 GAS BRASS	_	1									
22	X505013000	REGULADOR DE AIRE POLIDORO	POLIDORO AIR CONTROL	_	1									
	Q031322000	TORNILLO ALOMADO M4X15	CURVED SCREW M4X15	_	1									
23	U105701000	QUEMADOR HORNO	OVEN BURNER.	_	1									
	Q042022000	TORNILLO AVELLLANADO M4X15	COUNTERSUNK BOLT M4x15	_	4									
S/Nº	U052401000	TOBERA Ø 1,45 BP	NOZZLE Ø 1.45 BP	_	1									
S/Nº	U262400000	TOBERA Ø 2,15 GN	NOZZLE Ø 2.15 GN	_	1									

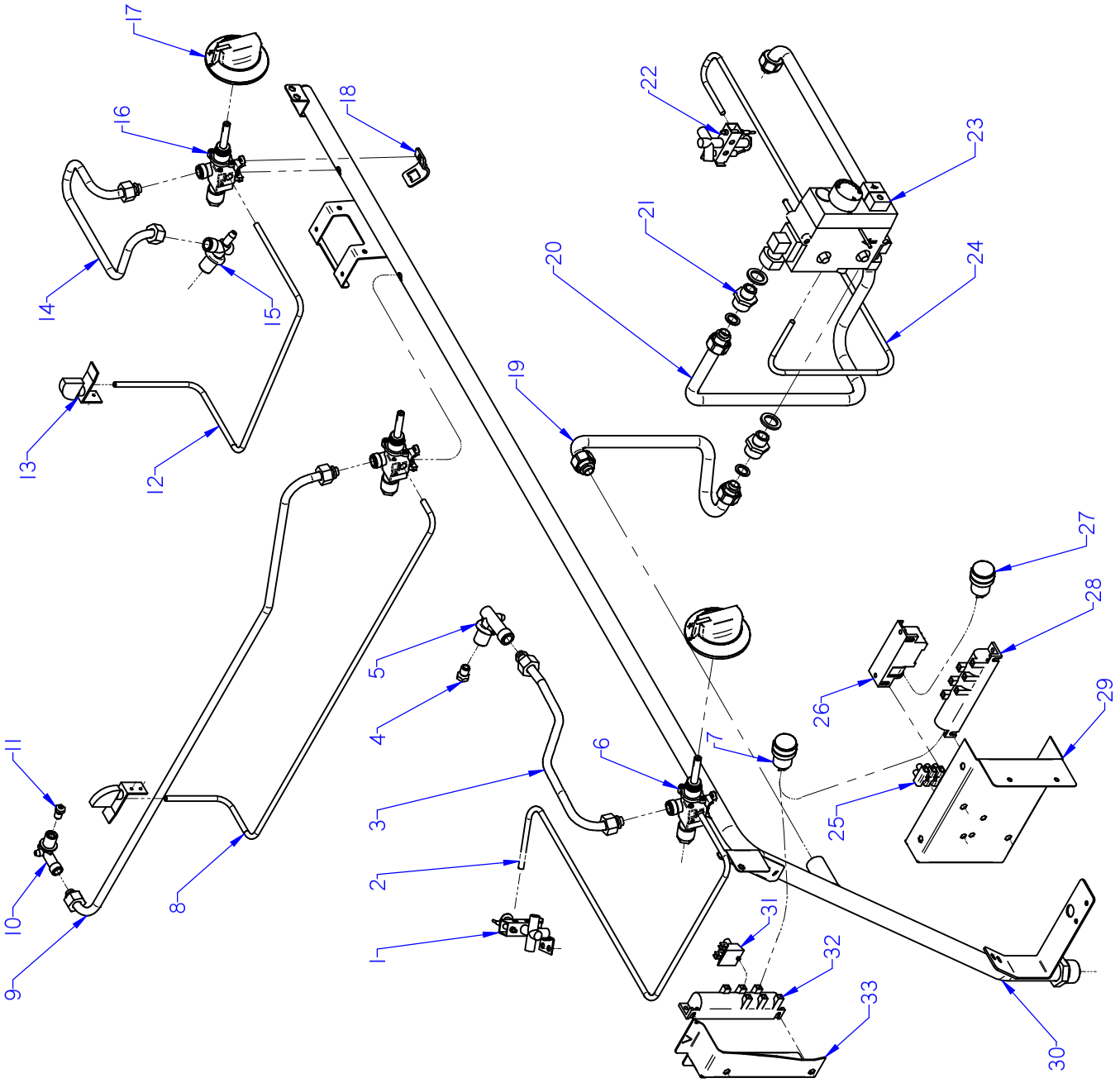

ITEM MARCADO EN COLOR = REPUESTO RECOMENDADO
COLOURED ITEM = RECOMMENDED SPARE PART

Nº plano / N º plane	Firma	Fecha / Date	Denominación / Denomination: PARTE FUNCIONAL / FUNCTIONAL PART	Lamina / Sheet	
C-2883		2011-10	COCINA CGF9-120 PLUS / 121 PLUS	4	Fagor Industrial S.Coop. FAGOR Oñate

MOD.	COCINAS / RANGES	ZONA / ZONE	PARTE FUNCIONAL / FUNCTIONAL PART	PLANO DIAGRAM	C-2883

ITEM	CODIGO REFERENCE	DENOMINACION	DENOMINATION	CGF9-120 I PLUS	CGF9-120 D PLUS	CGF9-121 I PLUS	CGF9-121 D PLUS					ELIMINADO ELIMINATED	INTRODUCID. INTRODUCED	NOTAS
1	U192104000	PILOTO COMPLETO	COMPLETE PILOT LIGHT	1	1	1	1							
S/Nº	U222130000	TERMOPAR L=600	THERMOCOUPLE L=600	1	1	1	1							
S/Nº	U442137000	INYECTOR Ø 0,4 GN	INJECTOR Ø 0.4 GN.	1	1	1	1							
S/Nº	X022131000	BUJIA	SPARK PLUG	1	1	1	1							
2	U965013000	CONDUCCIN PILOTO MESA AD	TABLE PILOT CONDUCCIN AD	1	1	1	1							
S/Nº	S312107000	MANGUITO TUBO PILOTO	PILOT PIPE HOSE	2	2	2	2							
S/Nº	X205028000	BICONO Ø 6	BICONE Ø 6	1	1	1	1							
3	U965011000	TUBO VALVULA QUEMADOR	BURNER VALVE PIPE	1	1	1	1							
4	R302400000	TOBERA Ø 1,65 BP (10850)	NOZZLE Ø 1.65 BP (10850)	1	1	1	1							
4	U054400000	TOBERA Ø 2,5 GN (10850)	NOZZLE Ø 2,5 GN (10850)	1	1	1	1							
5	U915014000	PORTATOBERAS HORNO	OVEN NOZZLE HOLDER	1	1	1	1							
S/Nº	U565011000	TUERCA GUIA	NUT GUIDE	1	1	1	1							
6	U942102000	GRIFO 18700 BY-PASS 1,20	TAP 18700 BY-PASS 1,20	1	1	1	1							
7	T723009000	PULSADOR SERIE MICRO	MICRO SWITCH SERIES	1	1	1	1							
8	U965002000	TUBO PILOTO POSTERIOR AD	REAR PILOT PIPE AD	1	1	1	1							
S/Nº	S312107000	MANGUITO TUBO PILOTO	PILOT PIPE HOSE	2	2	2	2							
S/Nº	X205028000	BICONO Ø 6	BICONE Ø 6	1	1	1	1							
9	U965005000	CON. QUEMADOR POSTERIOR AD	REAR BURNER UNIT COMP.	1	1	1	1							
10	U915014000	PORTATOBERAS HORNO	OVEN NOZZLE HOLDER	1	1	1	1							
S/Nº	U565011000	TUERCA GUIA	NUT GUIDE	1	1	1	1							
	Q153002000	TORNILLO TAPON	CAP BOLT	2	2	2	2							
11	U122407000	TOBERA Ø 1,05 BP (4000)	NOZZLE Ø 1.05 BP (4000)	1	1	1	1							
11	R302400000	TOBERA Ø 1,65 GN (4000)	NOZZLE Ø 1.65 GN (4000)	1	1	1	1							
11	0631000000	TOBERA Ø 1,40 BP (8000)	NOZZLE Ø 1.40 BP (8000)	1	2	2	3							
11	U112402000	TOBERA Ø 2,10 GN (8000)	NOZZLE Ø 2,10 GN (8000)	1	2	2	3							
12	U965001000	TUBO PILOTO ANTERIOR AD	FRONT PILOT PIPE AD	1	1	1	1							
S/Nº	S312107000	MANGUITO TUBO PILOTO	PILOT PIPE HOSE	2	2	2	2							
S/Nº	U962108000	BICONO Ø 6	BICONE Ø 6	2	3	4	2							

MOD.	COCINAS / RANGES	ZONA / ZONE	PARTE FUNCIONAL / FUNCTIONAL PART	PLANO DIAGRAM	C-2883

ITEM	CODIGO REFERENCE	DENOMINACION	DENOMINATION	CGF9-120 I PLUS	CGF9-120 D PLUS	CGF9-121 I PLUS	CGF9-121 D PLUS					ELIMINADO ELIMINATED	INTRODUCID. INTRODUCED	NOTAS
13	U962109000	PILOTO COMPLETO	S140(0140028) PILOT UNIT	2	2	2	2							
S/Nº	U962107000	INYECTOR LPG	INJECTOR LPG	2	2	2	2					23,11,11		
S/Nº	12041740	INYECTOR LPG	INJECTOR LPG	2	2	2	2						23,11,11	
S/Nº	U962106000	INYECTOR NG	INJECTOR NG	2	2	2	2							
S/Nº	U962101000	TERMOPAR 1500	THERMOCOUPLE 1500	1	1	1	1							
S/Nº	U962102000	TERMOPAR 600	THERMOCOUPLE 600	1	1	1	1							
S/Nº	X012101000	BUJIA 915.037	SPARK PLUG	2	2	2	2							
S/Nº	S312107000	MANGUITO TUBO PILOTO	PILOT PIPE HOSE	2	2	2	2							
14	U965003000	CONDUC. QUEMADOR ANTERI. AD	FRONT BURNER PIPE AD	1	1	1	1							
15	U265033000	PORTATOBERAS Ø10	NOZZLE HOLDER Ø10	1	1	1	1							
	Q153002000	TORNILLO TAPON	CAP BOLT	2	2	2	2							
16	U912115000	GRIFO 18700 BY-PASS 0,75	TAP 18700 BY-PASS 0.75	1	1	1	1							
16	U912109000	GRIFO 18700 BY-PASS 1,15	TAP 18700 BY-PASS 1.15	1	1	1	1							
17	U022117000	MANDO MONT COCINA GAS Ø8	GAS COOK. ASSEMBLY CTRL Ø8	3	3	3	3							
18	U912104000	BRIDA AMARRE GRIFO 1/2"	TAP FASTENING FLANGE 1/2"	3	3	3	3							
	Q122032000	TORNILLO ALLEN M5x15	ALLEN BOLT M5x15	3	3	3	3							
19	U025050000	ENTRADA MINISIT COMPL CG900	INPUT MINISIT COMPL CG900	_	_	1	1							
	Q306062000	ARANDELA Ø13,9X10,33x1,5	WASHER Ø13.9X10.33x1.5	_	_	8	8							
20	U025061000	TUBO COMPLETO EUROSIT QUEM.	COMPLETE PIPE EUROSIT BURN	_	_	1	1							
21	U202103000	MANGUITO REDUCCION 1/2-3/8"	REDUCTION HOSE 1/2-3/8"	_	_	2	2							
	Q306058000	ARANDELA 25x17X2.5	WASHER 25x17X2.5	_	_	2	2							
22	U322118000	PILOTO COMPLETO 100.062	COMPLETE PILOT LIGHT 100,062	_	_	1	1							
S/Nº	U442137000	INYECTOR Ø 0,4 GN	INJECTOR Ø 0.4 GN.	_	_	1	1							
S/Nº	U562130000	TERMOPAR L=850	THERMOCOUPLE L=850	_	_	1	1							
23	U134324000	VALVULA MINISIT 0710.654	VALVE MINISIT 0710.654	_	_	1	1							
S/Nº	Q307041000	JUNTA TORICA 25,4x20,2x2,6	O-RING 25.4x20.2x2.6	_	_	2	2							
S/Nº	U134317000	MANDO NEGRO MINI 916.124	BLACK CTRL. MINI 916.124	_	_	1	1							
S/Nº	U134318000	CUBIERTA MINISIT 903.052	COVER MINISIT 903.052	_	_	1	1							
S/Nº	Q031322000	TORNILLO ALOMADO M4x15	CURVED SCREW M4X15	_	_	8	8							
S/Nº	U264300000	RACOR 3/8 906,252	CONNECTION 3/8 906.252	_	_	2	2							
S/Nº	U134323000	RACORD BICONO 6 958.031	BICONE CONNECTION 6 958.031	_	_	1	1							

MOD.	COCINAS / RANGES	ZONA / ZONE	PARTE FUNCIONAL / FUNCTIONAL PART	PLANO DIAGRAM	C-2883

ITEM	CODIGO REFERENCE	DENOMINACION	DENOMINATION	CGF9-120 I PLUS	CGF9-120 D PLUS	CGF9-121 I PLUS	CGF9-121 D PLUS					ELIMINADO ELIMINATED	INTRODUCID. INTRODUCED	NOTAS
24	U025062000	TUBO PILOTO EUROSIT QUEM.	PILOT PIPE EUROSIT BURNER	_	_	1	1							
	U134323000	RACORD BICONO 6 958.031	BICONE CONNECTION 6 958.031	_	_	2	2							
25	Z713035000	REGLETA 6MM	C6MM STRIP	_	_	1	1							
26	X163014000	ENCENDEDOR PARA 2 BUJIAS	LIGHTER FOR 2 PLUGS	_	_	1	1							
27	T723009000	PULSADOR SERIE MICRO	MICRO SWITCH SERIES	_	_	1	1							
28	U963001000	TREN DE CHISPAS 6	TRAIN SPARKS 6	_	_	1	1							
29	U962683000	CUADRO ELECTRIC COCINA AD	ELECTRIC KITCHEN TABLE AD	_	_	1	1							
S/Nº	U962684000	TAPA CUADRO ELEC. AD	TABLE TOP ELEC. AD	_	_	1	1							
30	U215026000	DISTRIBUIDOR COM. CGF9-120 I	COM. DISTRIBUTOR CGF9-120 I	1	_	_	_							
30	U215024000	DISTRIBUIDOR COM. CGF9-120D	COM. DISTRIBUTOR CGF9-120 D	_	1	_	_							
30	U205051000	DISTRIBUIDOR COM. CGF9-121I	COM. DISTRIBUTOR CGF9-121I	_	_	1	_							
30	U205052000	DISTRIBUIDOR COM. CGF9-121D	COM. DISTRIBUTOR CGF9-121D	_	_	_	1							
	Q221342000	REMACHE EXAGONAL M5	HEXAGONAL RIVET M5	1	1	1	1							
	Q152004000	TORNIL, APLASTADO M5x13 A304	FLAT HEADED BOLT M5x13 A304	2	2	1	1							
	U635008000	TUERCA CIEGA 3/4	BLIND NUT 3/4	2	2	_	_							
	Q306051000	ARANDELA TAPON Ø23,5x3	LID WASHER Ø23.5x3	2	2	_	_							
31	Z713035000	REGLETA 6MM	C6MM STRIP	1	1	_	_							
32	U963001000	TREN DE CHISPAS 6	TRAIN SPARKS 6	1	1	_	_							
33	U962669000	CAJA TREN CHISPA SOLD AD	TRAIN SPARK BOX SOLD AD	1	1	_	_					31,10,11		
33	12038838	CAJA TREN CHISPA CG AD	TRAIN SPARK BOX CG AD	1	1	_	_						31,10,11	
	Q012031000	TORNILLO EXAGONAL M5x10	HEXAGONAL BOLT M5x10	2	2	_	_							

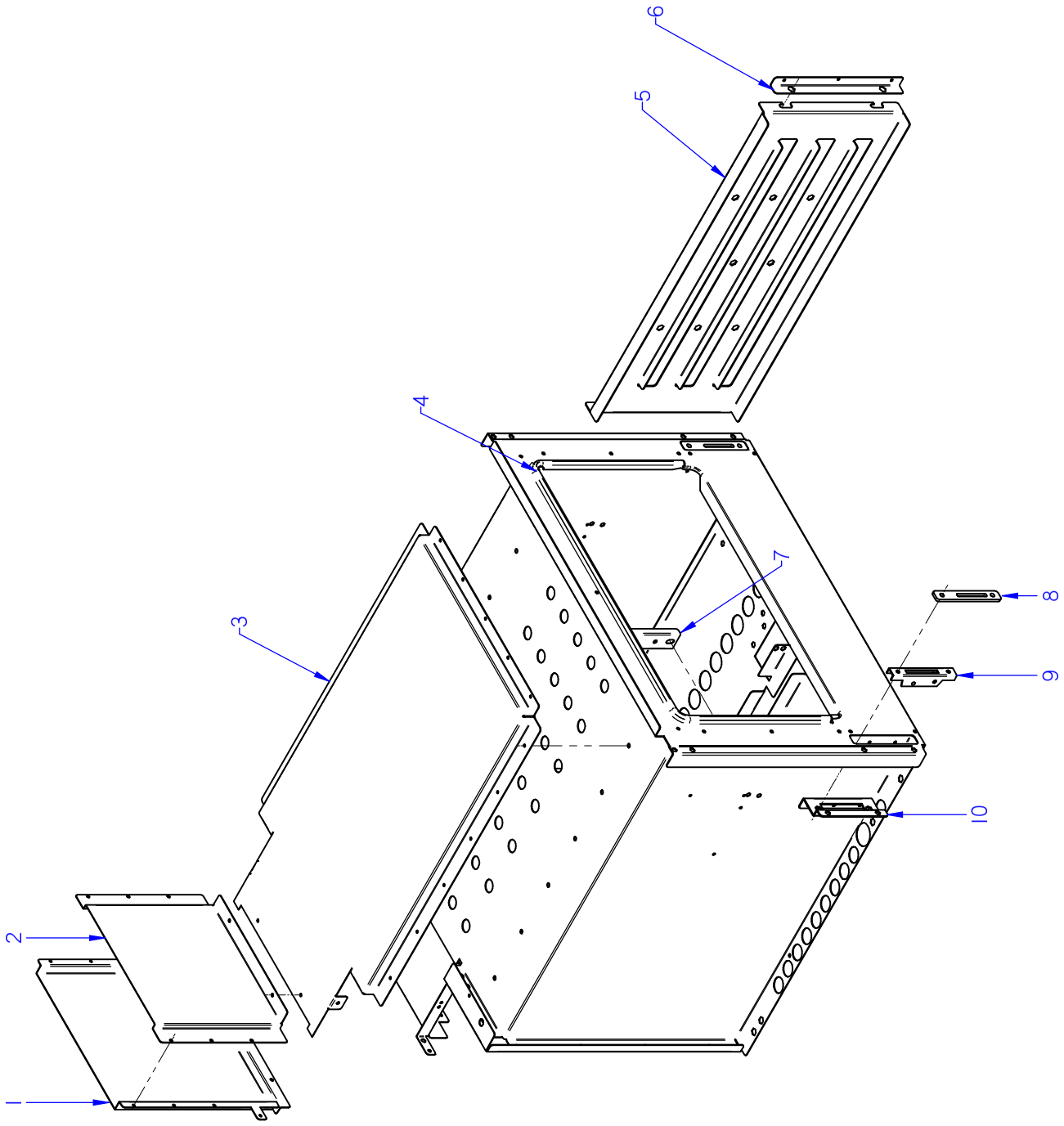

ITEM MARCADO EN COLOR = REPUESTO RECOMENDADO
COLOURED ITEM = RECOMMENDED SPARE PART

Nº plano / N º plane	Firma	Fecha / Date	Denominación / Denomination: HORNO / OVEN	Lamina / Sheet	
C-2884		2011-10	COCINA CGF9-121 PLUS	5	Fagor Industrial S.Coop. FAGOR Onate

MOD.	COCINAS / RANGES	ZONA / ZONE	HORNO / OVEN	PLANO DIAGRAM	C-2884

ITEM	CODIGO REFERENCE	DENOMINACION	DENOMINATION	CGF9-121 PLUS								ELIMINADO ELIMINATED	INTRODUCID. INTRODUCED	NOTAS
1	U965604000	POSTERIOR CHIMENEA AD	REAR FLUEPIPE AD	1										
	Q419005000	REMACHE 4x8 ALMG3 / ALUMINIO	RIVET 4X8 ALMG3 / ALUMINIUM	14										
2	U965603000	CHIMENEA ANTERIOR AD	FRONT FLUEPIPE AD	1										
3	U965602000	CAMARA DE HUMOS AD	SMOKE CHAMBER AD	1										
	Q419005000	REMACHE 4x8 ALMG3 / ALUMINIO	RIVET 4X8 ALMG3 / ALUMINIUM	19										
4	U965613000	JUNTA HORNO FIBRA DE VIDRIO	FURNACE FIBERGLASS BOARD	1										
5	U915607000	GUIA LATERAL HORNO G700	OVEN SIDE GUIDE G700	2										
	Q151336000	TORNILLO SOPORTE GUIAS	GUIDE SUPPORT BOLT	4										
	Q302022000	ARANDELA 16X6X1.2 A.304	WASHER 16X6X1.2 A.304	4										
	Q221321000	REMACHE ROSCAD.NUTSERT.M6	THREADED RIVET .NUTSERT.M6	4										
6	U915616000	SUPLEMENTO AMARRE GUIA LAT.	SIDE GUIDE FAST. SUPPL.	2										
	Q412000000	REMACHE TUBULAR 4x8	TUBULAR RIVET 4x8	6										
7	U055644000	FIJACION BULBO	FASTENING BULB	1										
	Q412000000	REMACHE TUBULAR 4x8	TUBULAR RIVET 4x8	2										
8	U915619000	EMBELLECED GUIA BISAGRA	HINGE GUIDE TRIM	2										
	Q152045000	TORNILLO AMARRE M6X25	FASTENING BOLT M6X25	4										
9	U010512000	GUIA DE BISAGRA	HINGE GUIDE	2								12.12.11		
9	12041846	GUIA BISAGRA G700 Y G900	HINGE GUIDE G700 Y G900	2									12.12.11	
10	U915604000	AMARRE GUIA BISAGRA HORNO	OVEN HINGE GUIDE FASTENING	2										
	Q221342000	REMACHE EXAGONAL M5	HEXAGONAL RIVET M5	2										
	Q412000000	REMACHE TUBULAR 4x8	TUBULAR RIVET 4x8	6										
	Q222042000	REMACHE EXAGONAL ROSCA M6	HEXAGONAL RIVET THREAD M6	4										

MOD.	COCINAS / RANGES	ZONA / ZONE	VARIOS / MISCELLANEOUS	PLANO DIAGRAM	

ITEM	CODIGO REFERENCE	DENOMINACION	DENOMINATION	CGF9-120 I PLUS	CGF9-120 D PLUS	CGF9-121 I PLUS	CGF9-121 D PLUS					ELIMINADO ELIMINATED	INTRODUCID. INTRODUCED	NOTAS
	U026508000	FOLLETO DE INSTRUCIONES CG	INSTRUCTION LEAFLET CG	1	1	1	1							
	U023001000	ESQUEMA TEORICO ADHESIVO AD	THEOR. DIAGRAM LABEL AD	1	1	1	1							PLANO HB-80558
	12008537	CABLE. ENCENDEDOR ENCIMERA	TOP LIGHTER WIRING	_	1	_	_							
	12008908	CABLE BUJIA-1º,2º FUEGO:CG9-41	WIRING PLUG-1º,2º FIRE: CG9-41	_	1	_	_					27,09,12		
	12008908	CABLE BUJIA-1º,2º FUEGO:CG9-41	WIRING PLUG-1º,2º FIRE: CG9-41	3	_	2	_							
	12008747	CABLE BUJIA-1º FUEGO:CG9-41	WIRING PLUG-1º FIRE: CG9-41	_	1	1	_						27,09,12	
	12009058	CABLE BUJIA-4º FUEGO:CG9-41	WIRING PLUG-4 º FIRE: CG9-41	_	_	_	3						27,09,12	
	12023746	CABLE ALIMENTACION	POWER WIRING	_	1	1	1							
	12009080	CABLEADO ENCENDEDOR HORNO	OVEN LIGHTER WIRING	1	_	1	1							
	12009072	CABLEADO ENCENDEDOR HORNO	OVEN LIGHTER WIRING	_	_	1	1							
	U333003000	CABLE MASA ENCENDEDOR	LIGHTER EARTH CABLE	1	2	1	1					27,09,12		
	12024296	CABLEADO ENCENDEDOR BUJIA	PLUG LIGHTER WIRING	1	2	1	1						27,09,12	

MOD.	COCINAS / RANGES	ZONA / ZONE	REPUESTOS RECOMENDADOS RECOMMENDED SPARE PART	PLANO DIAGRAM	

ITEM	CODIGO REFERENCE	DENOMINACION	DENOMINATION	CGF9-120 PLUS	CGF9-121 PLUS							ELIMINADO ELIMINATED	INTRODUCID. INTRODUCED	NOTAS
24	U020528000	BISAGRA CIERRE HORNO	OVEN LOCK HINGE	_	2									C-2881
1	U192104000	PILOTO COMPLETO	COMPLETE PILOT LIGHT	1	1									C-2883
S/Nº	U222130000	TERMOPAR L=600	THERMOCOUPLE L=600	1	1									C-2883
S/Nº	U442137000	INYECTOR Ø 0,4 GN	INJECTOR Ø 0.4 GN.	1	1									C-2883
S/Nº	X022131000	BUJIA	SPARK PLUG	1	1									C-2883
6	U942102000	GRIFO 18700 BY-PASS 1,20	TAP 18700 BY-PASS 1,20	1	1									C-2883
7	T723009000	PULSADOR SERIE MICRO	MICRO SWITCH SERIES	1	1									C-2883
13	U962109000	PILOTO COMPLETO	S140(0140028) PILOT UNIT	2	2									C-2883
S/Nº	12041740	INYECTOR LPG	INJECTOR LPG	2	2								23,11,11	C-2883
S/Nº	U962106000	INYECTOR NG	INJECTOR NG	2	2									C-2883
S/Nº	U962101000	TERMOPAR 1500	THERMOCOUPLE 1500	1	1									C-2883
S/Nº	U962102000	TERMOPAR 600	THERMOCOUPLE 600	1	1									C-2883
S/Nº	X012101000	BUJIA 915.037	SPARK PLUG	2	2									C-2883
S/Nº	S312107000	MANGUITO TUBO PILOTO	PILOT PIPE HOSE	2	2									C-2883
16	U912115000	GRIFO 18700 BY-PASS 0,75	TAP 18700 BY-PASS 0.75	1	1									C-2883
16	U912109000	GRIFO 18700 BY-PASS 1,15	TAP 18700 BY-PASS 1.15	1	1									C-2883
22	U322118000	PILOTO COMPLETO 100.062	COMPLETE PILOT LIGHT 100,062	_	1									C-2883
S/Nº	U442137000	INYECTOR Ø 0,4 GN	INJECTOR Ø 0.4 GN.	_	1									C-2883
S/Nº	U562130000	TERMOPAR L=850	THERMOCOUPLE L=850	_	1									C-2883
23	U134324000	VALVULA MINISIT 0710.654	VALVE MINISIT 0710.654	_	1									C-2883
S/Nº	Q307041000	JUNTA TORICA 25,4x20,2x2,6	O-RING 25.4x20.2x2.6	_	2									C-2883
S/Nº	U134317000	MANDO NEGRO MINI 916.124	BLACK CTRL. MINI 916.124	_	1									C-2883
S/Nº	U134318000	CUBIERTA MINISIT 903.052	COVER MINISIT 903.052	_	1									C-2883
26	X163014000	ENCENDEDOR PARA 2 BUJIAS	LIGHTER FOR 2 PLUGS	_	1									C-2883
27	T723009000	PULSADOR SERIE MICRO	MICRO SWITCH SERIES	_	1									C-2883
28	U963001000	TREN DE CHISPAS 6	TRAIN SPARKS 6	_	1									C-2883
32	U963001000	TREN DE CHISPAS 6	TRAIN SPARKS 6	1	_									C-2883
4	U965613000	JUNTA HORNO FIBRA DE VIDRIO	FURNACE FIBERGLASS BOARD	_	1									C-2884
9	12041846	GUIA BISAGRA G700 Y G900	HINGE GUIDE G700 Y G900	_	2								12.12.11	C-2884

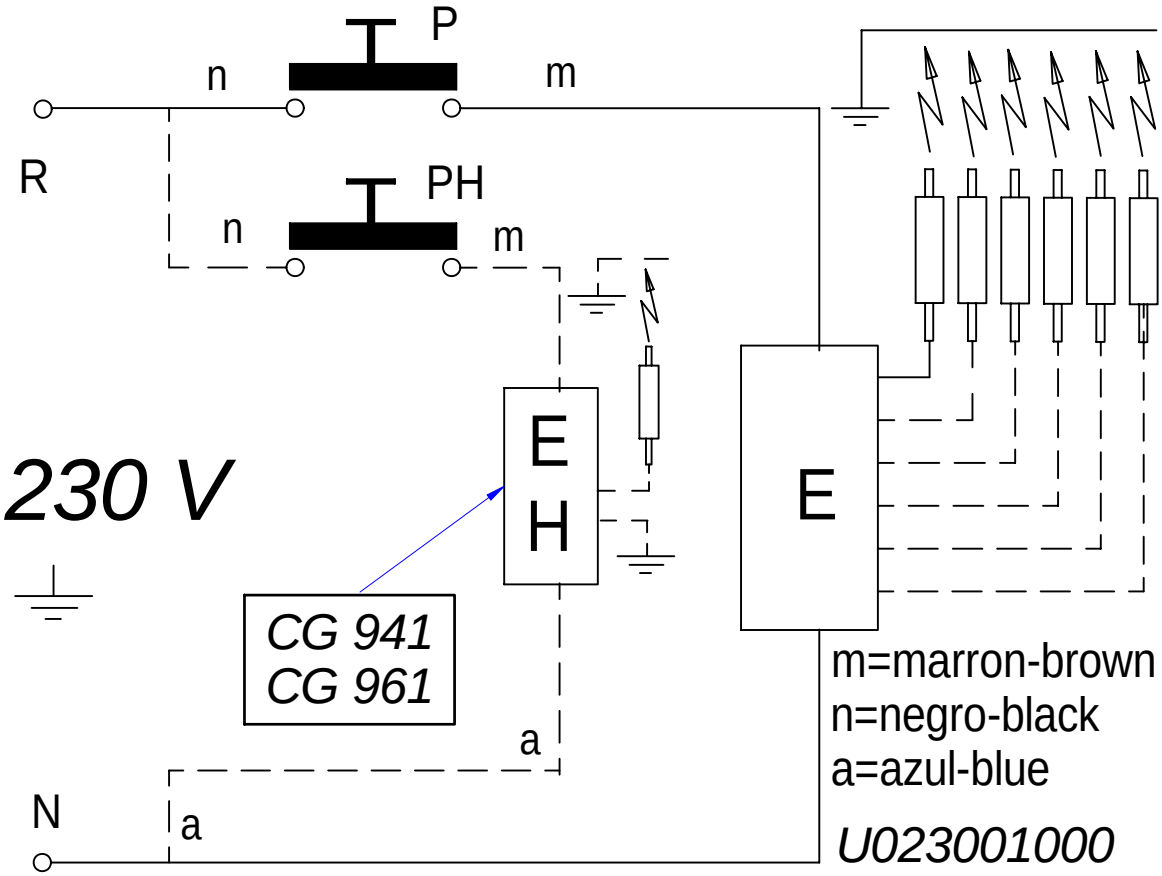

-	Eskema teorikoa: ADVANCE	-	-	U023001000	-
Zk./Nº	Pieza	Cant.	Materiala/Material	Klas. zk/Nº Clas.	Gainazal akabera/Tratamiento
Zk./Nº	Aldaketa/Modificaciones		Nork proposatua/Propuesta de	Data/Fecha	Perdoi orokorrak Tolerancias generales
-	-		-	-	
-	-		-	-	< 5 ± 0.2 / 50 ÷ 100 ± 0.8
-	-		-	-	5 ÷ 25 ± 0.4 / >100 ± 1
-	-		-	-	25 ÷ 50 ± 0.6 / α ± 1
-	-		-	-	

	Sinadura/Firma	Data/Fecha		Gainazal perdoia Mecanizado superficial
Marraztua/Dibujado	**e.carrascal**	**2008-11-25**	FAGOR Fagor Industrial,Koop.Elk, Mugatua	—
Proiektatua/Proyectado	**e.carrascal**	**2008-11-25**		
Egiaztatua/Comprobado	I.Alberdi	**2008-11-25**		

Eskala/Escala	EGOSKETA	Plano Zk./Plano Nº
-		HB-80558
		- Zk. ord. du
	Plano hau ezin daiteke erabili, ez berriztatu, gure baimenik gabe.	- Zk.gaitik ord.