DESPIECE



LAVADORAS
LAVA-LINGE
WASHING MACHINES
LAVATRICI
MÁQUINAS DE LAVAR ROUPA

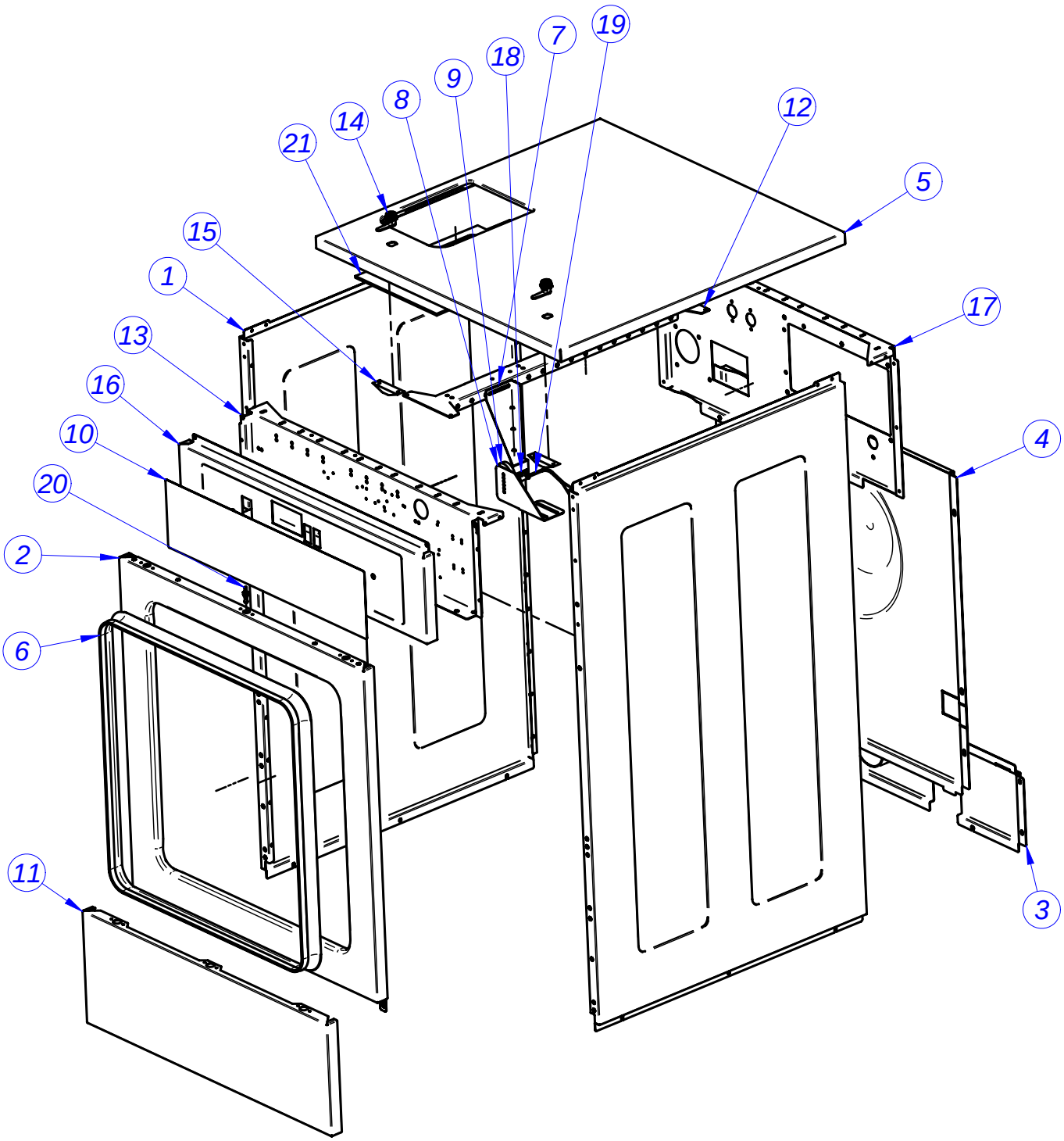
19
7
18
9
8
14
21
12
5
15
1
17
13
16
4
10
20
2
6
11
3

Nº	DENOMINACION	LR-10		LA-10			LR-13		LA-13			LR-18		LA-18			LR-25		LA-25			CODIGO
		M	MA	MP	M	MA	M	MA	MP	M	MA	M	MA	MP	M	MA	M	MA	MP	M	MA	
1	PANEL LATERAL	2	2	2	2	2																P610359000
							2	2	2	2	2											P620376000
												2	2									P634024000
														2	2	2						P630352000
																	2	2				P644035000
																			2	2	2	P640330000
2	PANEL FRONTAL	1	1	1	1	1																P617806000
							1	1	1	1	1	1	1									P627808000
														1	1	1	1	1				P637803000
																			1	1	1	P647804000
3	PANEL POSTERIOR DESAGUE	1	1	1	1	1																P610306000
							1	1	1	1	1	1	1									P620306000
														1	1	1						P630307000
																	1	1				P644032000
																			1	1	1	P640305000
4	PANEL POSTERIOR	1	1	1	1	1																P610362000
							1	1	1	1	1	1	1									P620382000
														1	1	1	1	1				P630360000
																			1	1	1	P640337000
5	ENCIMERA	1	1	1	1	1																P610353000
							1	1	1	1	1											P620375000
												1	1									P634026000
														1	1	1						P630358000
																	1	1				P644036000
																			1	1	1	P640335000
6	CORTINA (METROS)	2	2	2	2	2	2.5	2.5	2.5	2.5	2.5	2.5	2.5	2.5	2.5	2.5	2.5	2.5	2.5	2.5	2.5	P620324000
7	PORTA SENSOR DESEQ.			1	1	1																P627064000
									1	1	1			1	1	1			1	1	1	P630315000
8	SOPORTE IMAN DESEQ.			1	1	1			1	1	1			1	1	1			1	1	1	P627063000
9	IMAN DESEQUILIBRIO			1	1	1			1	1	1			1	1	1			1	1	1	P620337000
10	ADHESIVO			1					1					1					1			P623039000
		1			1		1			1		1			1		1			1		P623038000
			1			1		1			1		1			1		1			1	P623040000
11	ZOCALO	1	1	1	1	1																P617807000
							1	1	1	1	1	1	1									P627807000
														1	1	1	1	1				P637802000
																			1	1	1	P647803000
12	TRAVESAÑO CUBETERA	1	1	1	1	1	1	1	1	1	1											P620377000
												1	1						2	2	2	P634025000
														2	2	2						P630357000
																	2	2				P644037000
13	CONTRAPORTAMANDOS	1		1	1																	P610356000
			1			1																P610361000
							1		1	1		1										P620373000
								1			1		1									P620381000
														1	1		1					P630353000
																1		1				P630359000
																			1	1		P640331000
																					1	P640336000
14	CERRADURA	2		2	2		2		2	2		2		2	2		2		2	2		P620351000
			2			2		2			2		2			2		2			2	P620387000
15	RAMPA CIERRE ENCIMERA	2	2	2	2	2	2	2	2	2	2	2	2	2	2	2	2	2	2	2	2	P620379000
16	PORTAMANDOS	1		1	1																	P610357000
			1			1																P610358000
							1		1	1		1										P620374000
								1			1		1									P620380000
														1	1		1					P630354000
																1		1				P630355000
																			1	1		P640332000
																					1	P640333000
17	SOPORTE ELECTROVALVULAS	1	1	1	1	1																P610352000
							1	1	1	1	1	1	1									P620372000
														1	1	1	1	1				P630356000
																			1	1	1	P640334000
18	AMARRE SENSOR DESEQ.			1	1	1			1	1	1			1	1	1			1	1	1	Z203010000
19	SENSOR DESEQUILIBRIO			1	1	1			1	1	1			1	1	1			1	1	1	Z203009000
20	PITON	8	8	8	8	8	8	8	8	8	8	8	8	8	8	8	8	8	8	8	8	X012612000
21	JUNTA CUBETA	1	1	1	1	1	1	1	1	1	1	1	1	1	1	1	1	1	1	1	1	P610360000

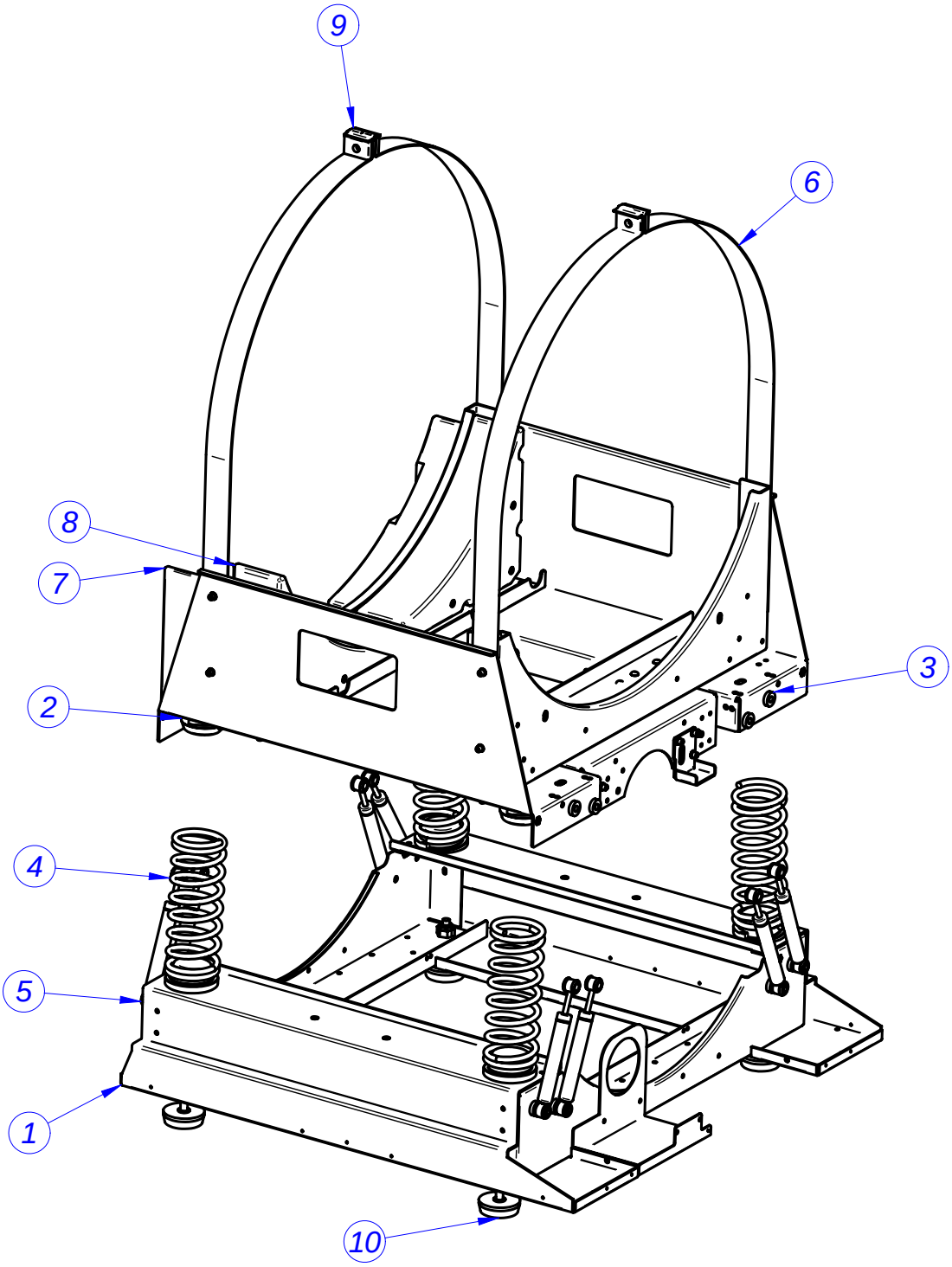
9
6
8
7
3
2
4
5
1
10

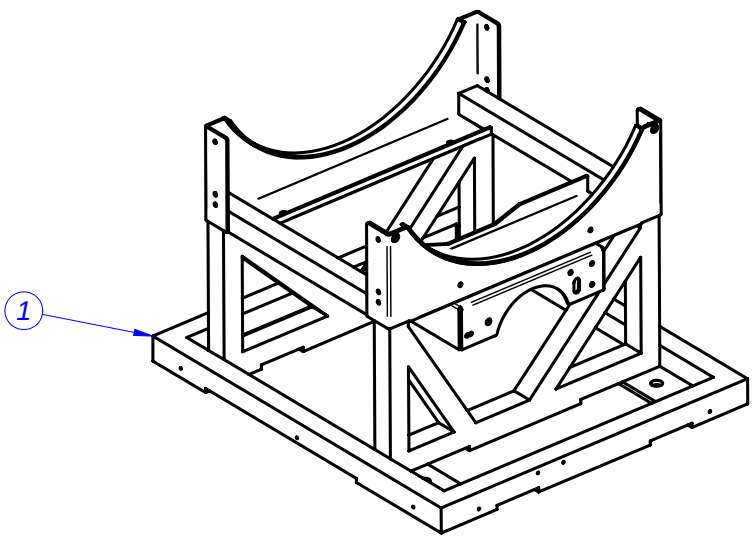
1

Nº	DENOMINACION	LR-10		LA-10			LR-13		LA-13			LR-18		LA-18			LR-25		LA-25			CODIGO
		M	MA	MP	M	MA	M	MA	MP	M	MA	M	MA	MP	M	MA	M	MA	MP	M	MA	
1	ARMAZON	1	1																			P614001000
				1	1	1																P610104000
							1	1														P624001000
									1	1	1											P620104000
												1	1									P634001000
														1	1	1						P630104000
																	1	1				P644001000
																			1	1	1	P640101000
2	BASE MUELLE			8	8	8			8	8	8			8	8	8						P620106000
																			8	8	8	P640111000
3	CASQUILLO AMORTIGUADOR			8	8	8			16	16	16			16	16	16			16	16	16	P620107000
4	MUELLE			4	4	4																P610105000
									4	4	4											P620105000
														4	4	4						P630106000
																			4	4	4	P640108000
5	AMORTIGUADOR			4	4	4																P620115000
									8	8	8											P620126000
														8	8	8						P620115000
																			8	8	8	P630111000
6	CUNA			1	1	1																P610216000
									1	1	1											P620207000
														1	1	1						P630207000
																			1	1	1	P640201000
7	CONTRAPESO ANTERIOR			2	2	2																P610207000
									2	2	2											P620201000
														2	2	2						P630212000
																			2	2	2	P640205000
8	CONTRAPESO POSTERIOR			2	2	2																P610207000
									2	2	2											P620201000
														2	2	2						P630208000
																			2	2	2	P640208000
9	AMARRE ABRAZADERA	4	4	4	4	4	4	4	4	4	4	4	4	4	4	4	4	4	4	4	4	P640215000
10	PATA			4	4	4			4	4	4			4	4	4			4	4	4	P626521000

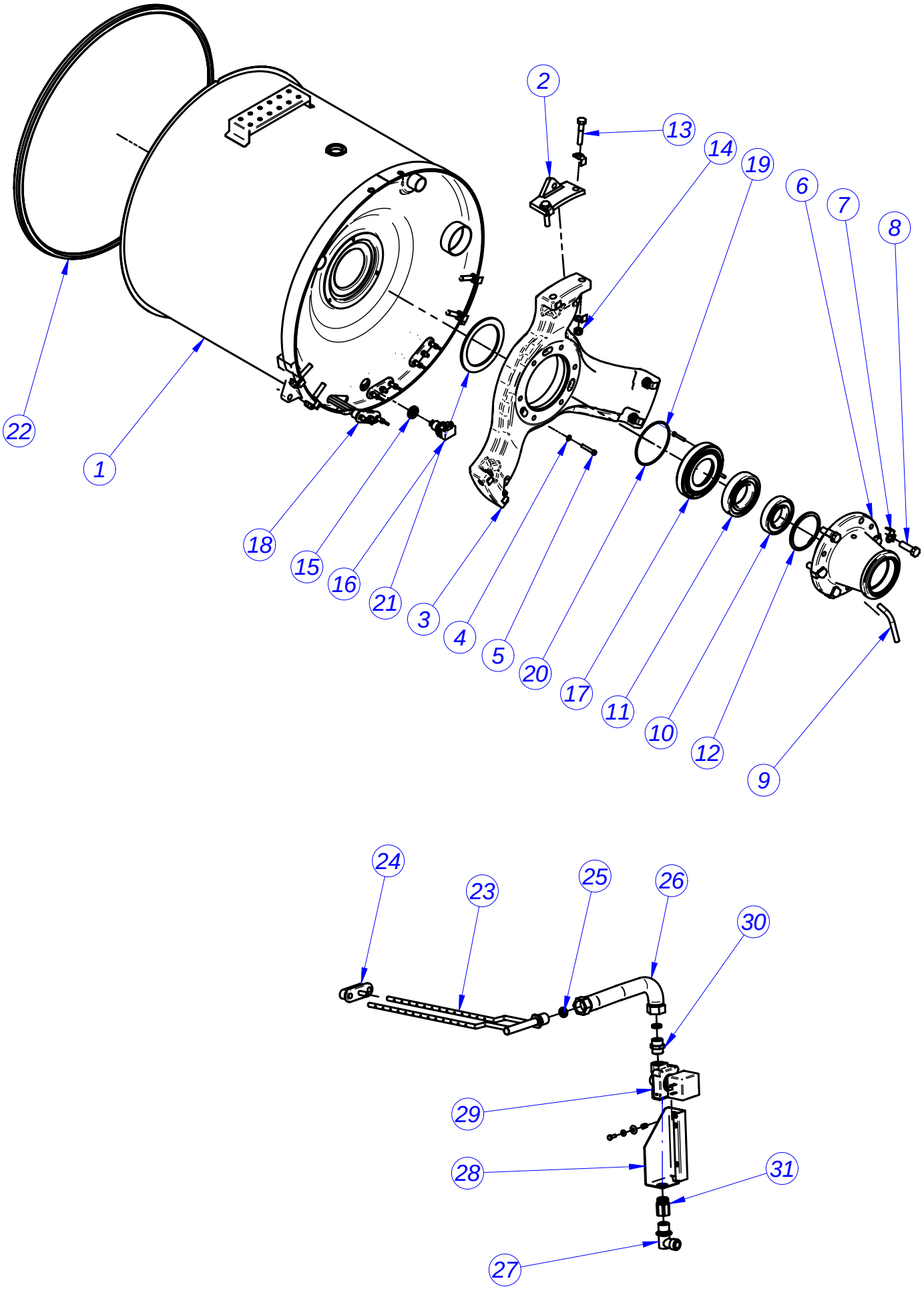
2
13
14
19
6
7
8
22
1
18
15
16
21
3
4
5
20
17
11
10
12
9
24
23
25
26
30
29
28
31
27

Nº	DENOMINACION	LR-10			LA-10			LR-13			LA-13			LR-18			LA-18			LR-25			LA-25			CODIGO
		E	AC	V	E	AC	V	E	AC	V	E	AC	V	E	AC	V	E	AC	V	E	AC	V	E	AC	V	
1	CUBA	1	1	1	1	1	1																			P616117000
								1	1	1	1	1	1													P626115000
														1	1	1										P634012000
																	1	1	1							P636107000
																				1	1	1				P644012000
																							1	1	1	P646105000
2	APOYO TORNILLOS	1	1	1	1	1	1																			P616011000
								1	1	1	1	1	1	1	1	1										P626014000
																	1	1	1	1	1	1				P636009000
																							1	1	1	P646012000
3	REFUERZO FONDO CUBA	1	1	1	1	1	1																			P616003000
								1	1	1	1	1	1	1	1	1										P626001000
																	1	1	1	1	1	1				P636001000
																							1	1	1	P646014000
4	ARANDELA	3	3	3	3	3	3	3	3	3	3	3	3	3	3	3	3	3	3	3	3	3	5	5	5	Q232040000
5	TORN. INTERIOR REFUERZO	3	3	3	3	3	3	3	3	3	3	3	3	3	3	3	3	3	3	3	3	3	5	5	5	Q122045000
6	SOPORTE RODAMIENTOS	1	1	1	1	1	1																			P616004000
								1	1	1	1	1	1	1	1	1										P626002000
																	1	1	1	1	1	1				P636002000
																							1	1	1	P646015000
7	ARANDELA SEGURIDAD	18	18	18	18	18	18	6	6	6	6	6	6	6	6	6										Q271302000
								12	12	12	12	12	12	12	12	12	18	18	18	18	18	18				Q271306000
																							30	30	30	Q271304000
8	TORN. SOP. RODAMIENTOS	6	6	6	6	6	6																			Q151528000
								6	6	6	6	6	6	6	6	6										Q151529000
																	6	6	6	6	6	6				Q151589000
																							10	10	10	Q151590000
9	TUBO EVACUACION	1	1	1	1	1	1	1	1	1	1	1	1	1	1	1	1	1	1	1	1	1	1	1	1	P626015000
10	RODAMIENTO EXTERIOR	1	1	1	1	1	1																			P616008000
								1	1	1	1	1	1	1	1	1										P626008000
																	1	1	1	1	1	1				P626009000
																							1	1	1	P644904000
11	RODAMIENTO INTERIOR	1	1	1	1	1	1																			P616009000
								1	1	1	1	1	1	1	1	1										P626009000
																	1	1	1	1	1	1				P636008000
																							2	2	2	P644903000
12	ANILLO SEGURIDAD	1	1	1	1	1	1																			Q301044000
								1	1	1	1	1	1	1	1	1										Q301030000
																	1	1	1	1	1	1				Q301036000
																							1	1	1	Q301045000
13	TORN. REFUERZO CUBA	6	6	6	6	6	6																			Q151529000
								6	6	6	6	6	6	6	6	6										Q151530000
																	6	6	6	6	6	6				Q151535000
																							10	10	10	Q151590000
14	TUERCA REFUERZO CUBA	6	6	6	6	6	6																			Q221307000
								6	6	6	6	6	6	6	6	6	6	6	6	6	6	6				Q221338000
																							10	10	10	Q221347000
15	JUNTA SONDA	1	1	1	1	1	1	1	1	1	1	1	1	1	1	1	1	1	1	1	1	1	1	1	1	N503017000
16	SONDA TEMPERATURA	1	1	1	1	1	1	1	1	1	1	1	1	1	1	1	1	1	1	1	1	1	1	1	1	P503025000
17	CASQUILLO CONTRARETEN	1	1	1	1	1	1																			P616005000
								1	1	1	1	1	1	1	1	1										P626003000
																	1	1	1	1	1	1				P636003000
																							1	1	1	P646003000
18	RESISTENCIA CALENTAMIENTO	3	1		3	1																				P613008000
								3	1		3	1														P623005000
														3	1		3	1								P633002000
																				3	1		3	1		P533001000
19	TORN. CASQ. CONTRARETEN	3	3	3	3	3	3	3	3	3	3	3	3	3	3	3	3	3	3	3	3	3	3	3	3	Q122034000
20	JUNTA TÓRICA	1	1	1	1	1	1																			Q307073000
								1	1	1	1	1	1	1	1	1										Q307075000
																	1	1	1	1	1	1				Q307077000
																							1	1	1	Q307083000
21	JUNTA CASQ. CONTRARETEN	1	1	1	1	1	1	1	1	1	1	1	1	1	1	1										P616013000
																	1	1	1	1	1	1				P636011000
																							1	1	1	P646017000
22	JUNTA CUBA	1	1	1	1	1	1																			P616104000
								1	1	1	1	1	1	1	1	1										P626110000
																	1	1	1	1	1	1				P636108000
																							1	1	1	P646110000
23	INYECTOR VAPOR 10,13,18			1			1			1			1			1			1			1				P615001000
																									1	P645002000
24	CIERRE INYECTOR			1			1			1			1			1			1			1			1	P445011000
25	ARANDELA VAPOR 10, 13, 18			2			2			2			2			2			2							P615002000
																						2			2	P535024000
26	MANGUERA VAPOR			1			1			1			1			1			1							P525005000
																						1			1	P545011000
27	CODO			1			1			1			1			1			1			1				S115013000
																									1	Z718421000
28	SOPORTE VALVULA			1			1			1			1			1			1			1				P620327000
																									1	P645001000
29	VALVULA VAPOR			1			1			1			1			1			1							P615003000
																						1				P535023000
30	RACOR M-M			1			1			1			1			1			1			1				S205023000
																									1	Z102301000
31	RACOR H-M			1			1			1			1			1			1			1				X162101000

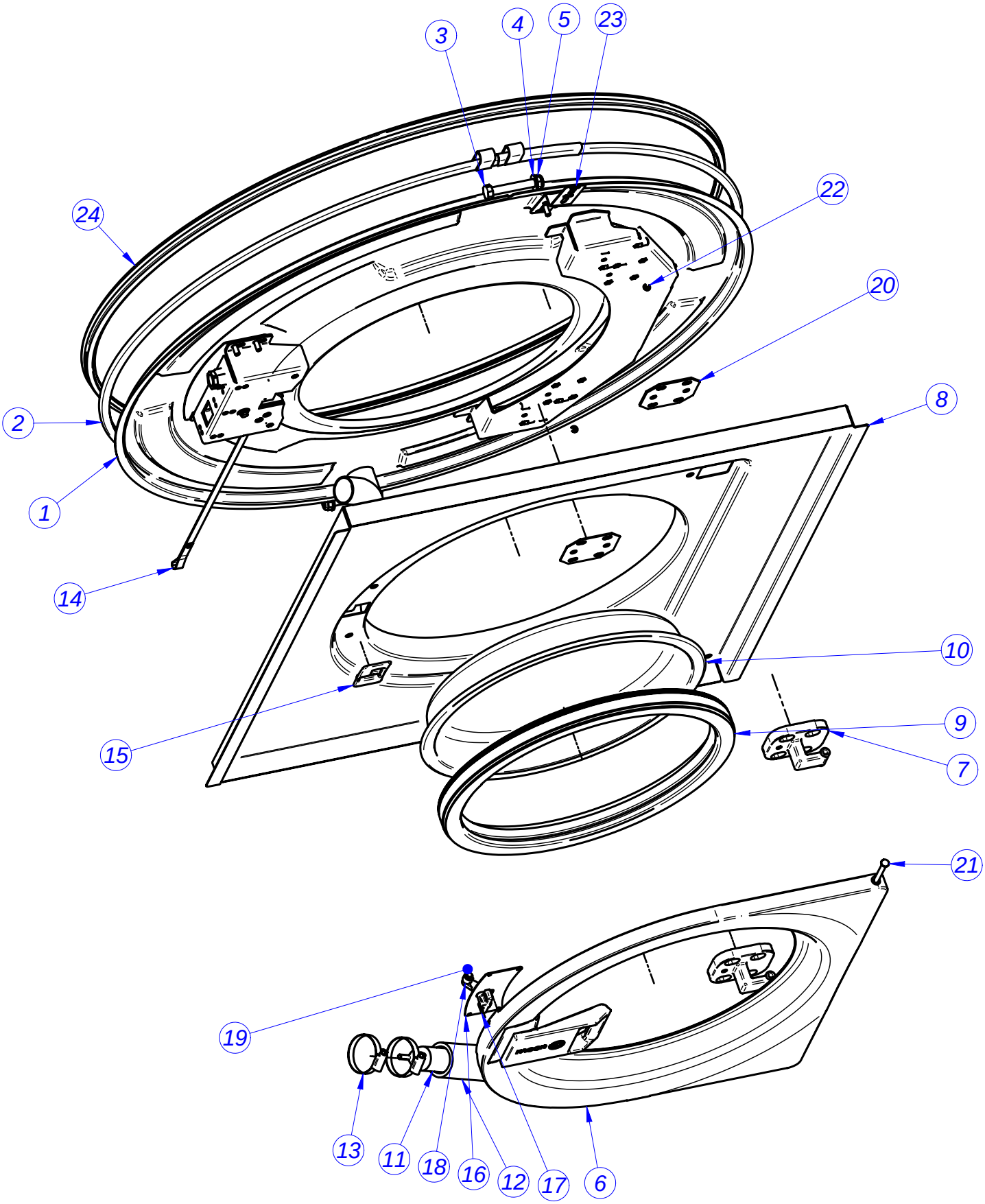
3
4
5
23
24
22
20
2
8
1
14
10
15
9
7
21
19
13
11
18
16
12
17
6

Nº	DENOMINACION	LR-10	LA-10	LR-13	LA-13	LR-18	LA-18	LR-25	LA-25	CODIGO
1	FRENTE CUBA COMPLETO	1	1							P616112000
				1	1	1				P626112000
							1	1		P636110000
									1	P646008000
2	CIERRE CUBA	1	1							P616102000
				1	1	1				P626118000
							1	1		P636112000
									2	P646107000
3	TORN. CIERRE CUBA	1	1	1	1	1	1	1	2	Q011369000
4	ARAND. CIERRE	2	2	2	2	2	2	2	4	Q232060000
5	TUERCA CIERRE CUBA	1	1	1	1	1	1	1	2	Q221306000
6	PUERTA CON MANETA	1	1							P610512000
				1	1	1	1	1	1	P620532000
7	BISAGRA PUERTA	2	2	2	2	2	2	2	2	P620502000
8	FONDO PUERTA	1	1							P610501000
				1	1	1	1	1	1	P620501000
9	JUNTA PUERTA	1	1							P610508000
				1	1	1	1	1	1	P620528000
10	MIRILLA PUERTA	1	1							P440503000
				1	1	1	1	1	1	P530503000
11	CAMARA PRESOSTATO	1	1	1	1	1	1	1	1	Q232060000
12	CONDUCTO UNION	1	1	1	1	1	1	1	1	P502106000
13	ABRAZADERA	2	2	2	2	2	2	2	2	Q881306000
14	CIERRE COMPLETO	1	1	1	1	1	1	1	1	P620531000
15	EMBELLECEDOR CIERRE	1	1	1	1	1	1	1	1	P620515000
16	TAPA CIERRE	1	1							P610504000
				1	1	1	1	1	1	P627816000
17	GANCHO CIERRE	1	1	1	1	1	1	1	1	P620505000
18	CASQUILLO	1	1	1	1	1	1	1	1	P610506000
19	ANILLO SEG	1	1	1	1	1	1	1	1	Q302061000
20	CALZO BISAGRA	4	4	4	4	4	4	4	4	P620521000
21	PASADOR PUERTA	2	2	2	2	2	2	2	2	P620514000
22	ARANDELA SEGURIDAD 4	2	2	2	2	2	2	2	2	Q272020000
23	SOPORTE CONDUCTO	1	1	1	1	1	1	1	1	P626128000
24	JUNTA CUBA	1	1							P616104000
				1	1	1				P626110000
							1	1		P636108000
									1	P646110000

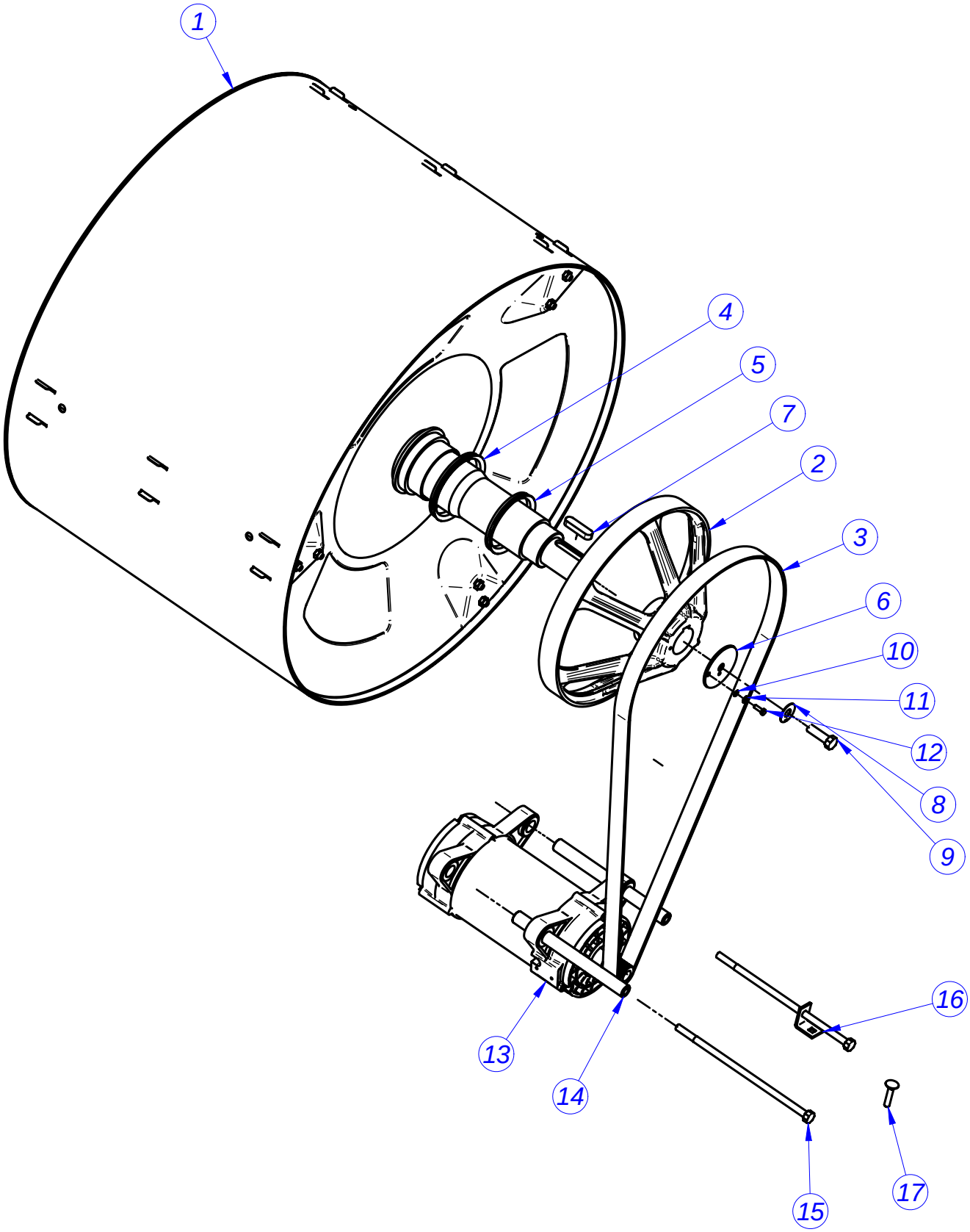
1
4
5
7
2
3
6
10
11
12
8
9
16
13
14
15
17

Nº	DENOMINACION	LR-10		LA-10			LR-13		LA-13			LR-18		LA-18			LR-25		LA-25			CODIGO
		M	MA	MP	M	MA	M	MA	MP	M	MA	M	MA	MP	M	MA	M	MA	MP	M	MA	
1	TAMBOR COMPLETO	1	1	1	1	1																P614916000
							1	1	1	1	1											P624909000
												1	1									P634010000
														1	1	1						P634910000
																	1	1				P644010000
																			1	1	1	P644912000
2	POLEA	1	1	1	1	1																P616006000
							1	1	1	1	1	1	1	1	1	1	1	1				P626006000
																			1	1	1	P646013000
3	CORREA	1	1	1	1	1																P615902000
							1	1	1	1	1	1	1									P625903000
														1	1	1						P635902000
																	1	1				P635908000
																			1	1	1	P645905000
4	RETEN V-RING 1	1	1	1	1	1																P634911000
							1	1	1	1	1	1	1									P624914000
														1	1	1	1	1				P634912000
																			1	1	1	P644916000
5	RETEN V-RING 2	1	1	1	1	1																P614911000
							1	1	1	1	1	1	1									P624913000
														1	1	1	1	1				P634911000
																			1	1	1	P644915000
6	ARANDELA POLEA	1	1	1	1	1																P616010000
							1	1	1	1	1	1	1	1	1	1	1	1	1	1	1	P626012000
7	CHAVETA	1	1	1	1	1																P614914000
							1	1	1	1	1	1	1	1	1	1	1	1	1	1	1	P626010000
8	ARANDELA SEGURIDAD	1	1	1	1	1	1	1	1	1	1	1	1	1	1	1	1	1	1	1	1	Q301329000
9	TORNILLO POLEA	1	1	1	1	1	1	1	1	1	1	1	1	1	1	1	1	1	1	1	1	Q011376000
10	ARANDELA A5	1	1	1	1	1	1	1	1	1	1	1	1	1	1	1	1	1	1	1	1	Q232030000
11	ARAND.ABAN. A5 A.304	1	1	1	1	1	1	1	1	1	1	1	1	1	1	1	1	1	1	1	1	Q242030000
12	TORN.EXA. M5X15 A.304	1	1	1	1	1	1	1	1	1	1	1	1	1	1	1	1	1	1	1	1	Q012032000
13	MOTOR	1	1	1	1	1																P615906000
							1	1	1	1	1											P625905000
												1	1	1	1	1						P635906000
																	1	1	1	1	1	P645902000
14	TUBO SOPORTE MOTOR	2	2	2	2	2																P615908000
							2	2	2	2	2											P625901000
												2	2	2	2	2						P635907000
																	2	2	2	2	2	P645903000
15	TORNILLO MOTOR	2	2	2	2	2																Q151525000
							2	2	2	2	2											Q151526000
												2	2	2	2	2						Q151527000
																	2	2	2	2	2	Q151591000
16	TENSOR MOTOR	1	1	1	1	1	1	1	1	1	1	1	1	1	1	1	1	1	1	1	1	P620214000
17	TORNILLO TENSOR	1	1	1	1	1	1	1	1	1	1	1	1	1	1	1	1	1	1	1	1	Q151393000

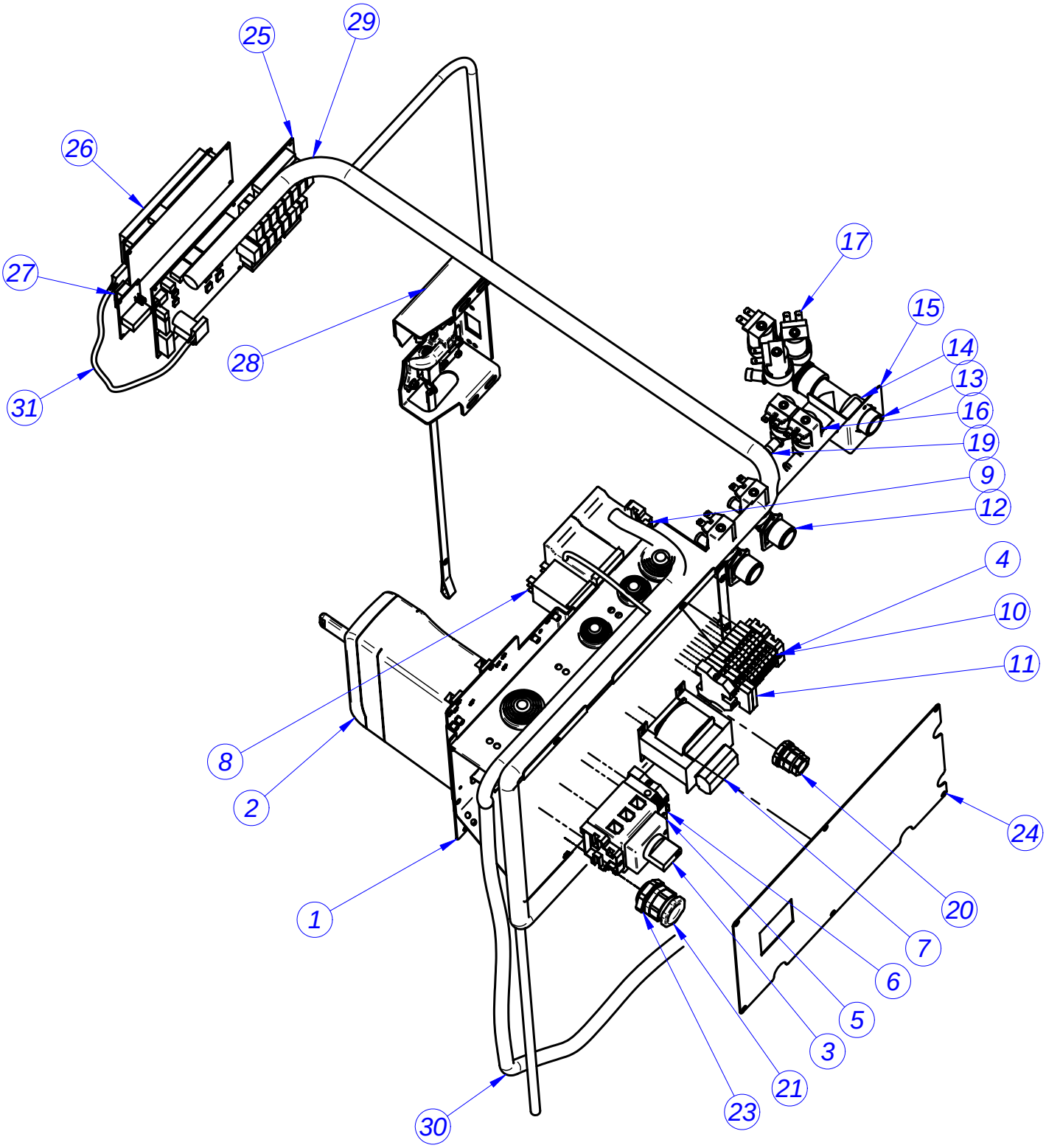
25
29
26
27
28
31
17
15
14
13
16
19
9
12
4
10
11
8
2
1
24
20
7
6
5
3
21
23
30

Nº	DENOMINACION	LR-10				LA-10								LR-13				LA-13								LR-18				LA-18								LR-25				LA-25								CODIGO
		M		MA		MP			M			MA		M		MA		MP			M			MA		M		MA		MP			M			MA		M		MA		MP			M			MA		
	CALENTAMIENTO	E	AC/V	E	AC	E	AC	V	E	AC	V	E	AC	E	AC/V	E	AC	E	AC	V	E	AC	V	E	AC	E	AC/V	E	AC	E	AC	V	E	AC	V	E	AC	E	AC	E	AC	E	AC	V	E	AC	V	E	AC	
1	PORTA CUADRO ELECTRICO	1	1	1	1	1	1	1	1	1	1	1	1	1	1	1	1	1	1	1	1	1	1	1	1	1	1	1	1																					P620347000
																												1	1	1	1	1	1	1	1	1	1	1	1	1	1	1	1	1	1	1	1	1	1	P644020000
2	VARIADOR PROGRAMADO	1	1	1	1	1	1	1	1	1	1	1	1																																					P613024000
														1	1	1	1	1	1	1	1	1	1	1	1																									P623036000
																								1	1	1	1	1	1	1	1	1	1	1	1	1	1													P633010000
																																				1	1	1	1	1	1	1	1	1	1	1	1	1	1	P643012000
3	SECCIONADOR	1	1	1	1	1	1	1	1	1	1	1	1		1		1		1	1		1	1		1		1		1	1		1	1		1		1		1	1		1	1		1	1		1	P623003000
														1		1		1			1			1		1		1								1		1		1			1			1			P537038000
4	TOPE FINAL	3	3	3	3	3	3	3	3	3	3	3	3	3	3	3	3	3	3	3	3	3	3	3	3	3	3	3	3	3	3	3	3	3	3	3	3	3	3	3	3	3	3	3	3	3	3	3	Z263303000
5	BORNA AZUL	1		1		1			1			1		1		1		1			1			1		1		1								1		1		1			1			1			R673010000
6	BORNA TIERRA	1	1	1	1	1	1	1	1	1	1	1	1	1	1	1	1	1	1	1	1	1	1	1	1	1	1	1	1	1	1	1	1	1	1	1	1	1	1	1	1	1	1	1	1	1	1	1	Z103035000
7	TRANSFORMADOR	1	1	1	1	1	1	1	1	1	1	1	1	1	1	1	1	1	1	1	1	1	1	1	1	1	1	1	1	1	1	1	1	1	1	1	1	1	1	1	1	1	1	1	1	1	1	1	P623004000
8	CVF	1	1	1	1	1	1	1	1	1	1	1	1	1	1	1	1	1	1	1	1	1	1	1	1	1	1	1	1	1	1	1	1	1	1	1	1												Z203062000
																																				1	1	1	1	1	1	1	1	1	1	1	1	1	Z213007000
9	CONTACTOR CALENTAMIENTO	2	0	2	0	2	1	0	2	1	0	2	0	2	0	2	0	2	1	0	2	1	0	2	0	2	0	2	0	2	1	0	2	1	0	2	0												R663031000
																																				2	0	2	0	2	1	0	2	1	0	2	0		Z203050000
10	REGLETA DOSIFICACION	5	5	7	7	8	8	8	5	5	5	7	7	5	5	7	7	8	8	8	5	5	5	7	7	5	5	7	7	8	8	8	5	5	5	7	7	5	5	7	7	8	8	8	5	5	5	7	7	R073005000
11	BORNA PORTAFUSIBLE	2	2	2	2	2	2	2	2	2	2	2	2	2	2	2	2	2	2	2	2	2	2	2	2	2	2	2	2	2	2	2	2	2	2	2	2	2	2	2	2	2	2	2	2	2	2	2	2	R073005000
12	ELECTROVALVULA SIMPLE	1	1	1	1	2	2	2	2	1	1	1	1	1	1	1	1	2	2	2	2	1	1	1	1	1	1	1	1	2	2	2	1	1	1	1	1	1	1	1	1	1	1	1	1	1	1	1	1	Z701135000
																																				2	2	2	2	3	3	3	2	2	2	2	2	2	Z102305000
																																				2	2	2	2	3	3	3	2	2	2	2	2	2	Z102323000
																																				2	2	2	2	3	3	3	2	2	2	2	2	2	P533009000
13	RACOR 3/4"	1	1	1	1	1	1	1	1	1	1	1	1	1	1	1	1	1	1	1	1	1	1	1	1	1	1	1	1	1	1	1	1	1	1	1	1	3	3	3	3	4	4	4	3	3	3	3	3	Z102301000
14	Te A 90º	1	1	1	1	1	1	1	1	1	1	1	1	1	1	1	1	1	1	1	1	1	1	1	1	1	1	1	1	1	1	1	1	1	1	1	1	1	1	1	1	1	1	1	1	1	1	1	1	P535020000
15	TOPE ELECTROVALVULA	1	1	1	1	1	1	1	1	1	1	1	1	1	1	1	1	1	1	1	1	1	1	1	1	1	1	1	1	1	1	1	1	1	1	1	1	1	1	1	1	1	1	1	1	1	1	1	1	P535003000
16	ELECTROVALVULA DOBLE	1	1	1	1	1	1	1	1	1	1	1	1	1	1	1	1	1	1	1	1	1	1	1	1	1	1	1	1	1	1	1	1	1	1	1	1												P255001000
17	ELECTROVALVULA TRIPLE	1	1	1	1	1	1	1	1	1	1	1	1	1	1	1	1	1	1	1	1	1	1	1	1	1	1	1	1	1	1	1	1	1	1	1	1	1	1	1	1	1	1	1	1	1	1	1	Z611123000
19	REGULADOR VERDE	2	2	2	2	2	2	2	2	2	2	2	2	2	2	2	2	2	2	2	2	2	2	2	2	2	2	2	2	2	2	2	2	2	2	2	2	2	2	2	2	2	2	2	2	2	2	2	P443042000
20	PRENSA ESTOPA DOSIFICACION	1	1	1	1	1	1	1	1	1	1	1	1	1	1	1	1	1	1	1	1	1	1	1	1	1	1	1	1	1	1	1	1	1	1	1	1	1	1	1	1	1	1	1	1	1	1	1	R073004000
21	PRENSA ESTOPA ALIMENTACION	1	1	1	1	1	1	1	1	1	1	1	1	1	1	1	1	1	1	1	1	1	1	1	1	1	1	1	1	1	1	1	1	1	1	1	1	1	1	1	1	1	1	1	1	1	1	1	R023013000
22	JUNTA GOMA	1	1	1	1	1	1	1	1	1	1	1	1	1	1	1	1	1	1	1	1	1	1	1	1	1	1	1	1	1	1	1	1	1	1	1	1	1	1	1	1	1	1	1	1	1	1	1	R023026000
23	TUERCA PRENSA ESTOPA ALIMENTACION	1	1	1	1	1	1	1	1	1	1	1	1	1	1	1	1	1	1	1	1	1	1	1	1	1	1	1	1	1	1	1	1	1	1	1	1	1	1	1	1	1	1	1	1	1	1	1	Q223016000
24	TAPA CONEXIONES	1	1	1	1	1	1	1	1	1	1	1	1		1		1		1	1		1	1		1		1		1		1	1		1	1		1		1		1		1	1		1	1		1	P610354000
														1		1		1			1			1		1		1								1		1		1			1			1			P620383000
25	PLACA ENTRADAS-SALIDAS	1	1	1	1				1	1	1	1	1	1	1	1	1				1	1	1	1	1	1	1	1	1				1	1	1	1	1	1	1	1				1	1	1	1	1	P613025000
						1	1	1										1	1	1										1	1	1										1	1	1					P613005000
26	VISUALIZADOR	1	1	1	1	1	1	1	1	1	1	1	1		1		1		1	1		1	1		1		1		1		1	1		1	1		1		1		1		1	1		1	1		1	P613018000
														1		1		1			1			1		1		1								1		1		1			1			1			P643008000
27	INTERRUPTOR GENERAL	1	1			1	1	1	1	1	1			1	1			1	1	1	1	1	1	1		1	1			1	1	1	1	1	1			1	1			1	1	1	1	1	1			Z218030000
				1	1							1	1			1	1							1	1			1	1																	1	1	P623025000
28	CIERRE COMPLETO	1	1	1	1	1	1	1	1	1	1	1	1																																					P620516000
														1	1	1	1	1	1	1	1	1	1	1	1	1	1	1	1	1	1	1	1	1	1	1	1	1	1	1	1	1	1	1	1	1	1	1	P620531000
29	INSTALACION GENERAL	1	1	1	1	1	1	1	1	1	1	1	1	1	1	1	1	1	1	1	1	1	1	1	1	1	1	1	1	1	1	1	1	1	1	1	1												P623033000
																																				1	1	1	1	1	1	1	1	1	1	1	1	1	P643002000
30	CABLE CALENTAMIENTO						1			1									1			1									1			1									1			1				P613015000
			1					1			1				1					1			1			1					1			1									1					P613016000
		1		1		1			1			1		1		1		1			1			1		1		1			1			1									1			1			P623008000
																																				1		1		1			1			1			P643003000
31	CABLE COMUNICACION	1	1	1	1				1	1	1	1	1	1	1	1	1				1	1	1	1	1	1	1	1	1				1	1	1	1	1	1	1	1				1	1	1	1	1	P623026000
						1	1	1										1	1	1										1	1	1										1	1	1					P623009000

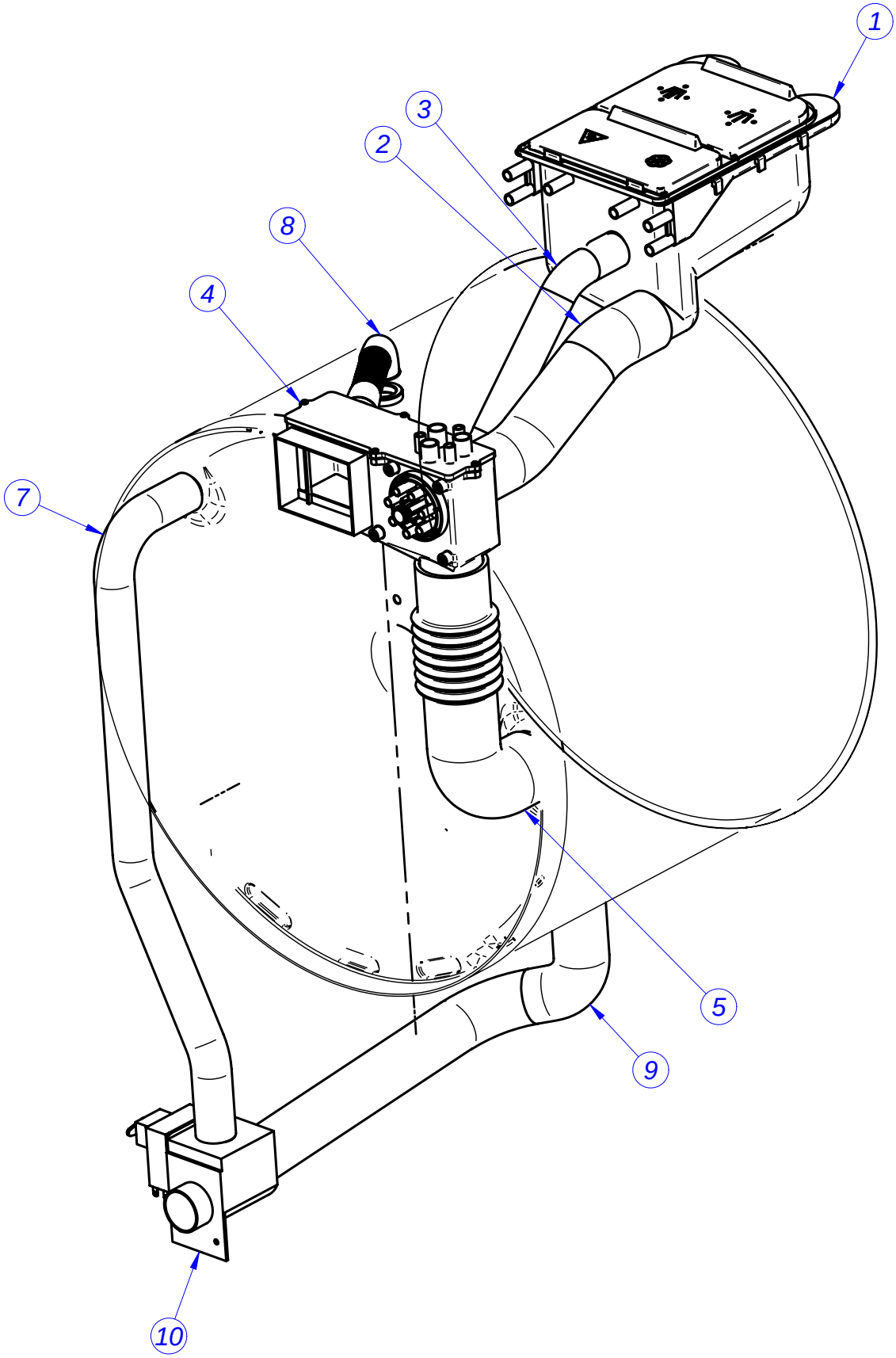
1
2
3
4
5
7
8
9
10

Nº	DENOMINACION	LR-10		LA-10			LR-13		LA-13			LR-18		LA-18			LR-25		LA-25			CODIGO
		M	MA	MP	M	MA	M	MA	MP	M	MA	M	MA	MP	M	MA	M	MA	MP	M	MA	
1	CUBETA DETERGENTES	1	1	1	1	1	1	1	1	1	1	1	1	1	1	1	1	1	1	1	1	P620712000
2	CONDUCTO CUBETERA	1	1	1	1	1	1	1	1	1	1											P610713000
												1	1						1	1	1	P634022000
														1	1	1						P630705000
																	1	1				P644033000
3	CONDUCTO REBOSADERO CUBETERA	1	1	1	1	1	1	1	1	1	1											P610714000
												1	1						1	1	1	P634023000
														1	1	1						P630706000
																	1	1				P644034000
4	CAJA COLECTOR	1	1	1	1	1	1	1	1	1	1	1	1	1	1	1	1	1	1	1	1	P620723000
5	CONDUCTO ENTRADA AGUA	1	1	1	1	1																P610704000
							1	1	1	1	1	1	1									P620702000
														1	1	1	1	1	1	1	1	P630701000
7	CONDUCTO REBOSADERO	1	1	1	1	1																P610702000
							1	1	1	1	1	1	1									P620704000
														1	1	1	1	1				P630702000
																			1	1	1	P640703000
8	SALIDA VAHOS	1	1	1	1	1	1	1	1	1	1	1	1	1	1	1	1	1	1	1	1	P610705000
9	CONDUCTO DESAGÜE	1	1	1	1	1	1	1	1	1	1											P610703000
												1	1									P634021000
														1	1	1						P630703000
																	1	1	1	1	1	P532119000
10	VALVULA	1	1	1	1	1	1	1	1	1	1	1	1	1	1	1						P302120000
																	1	1	1	1	1	P532103000

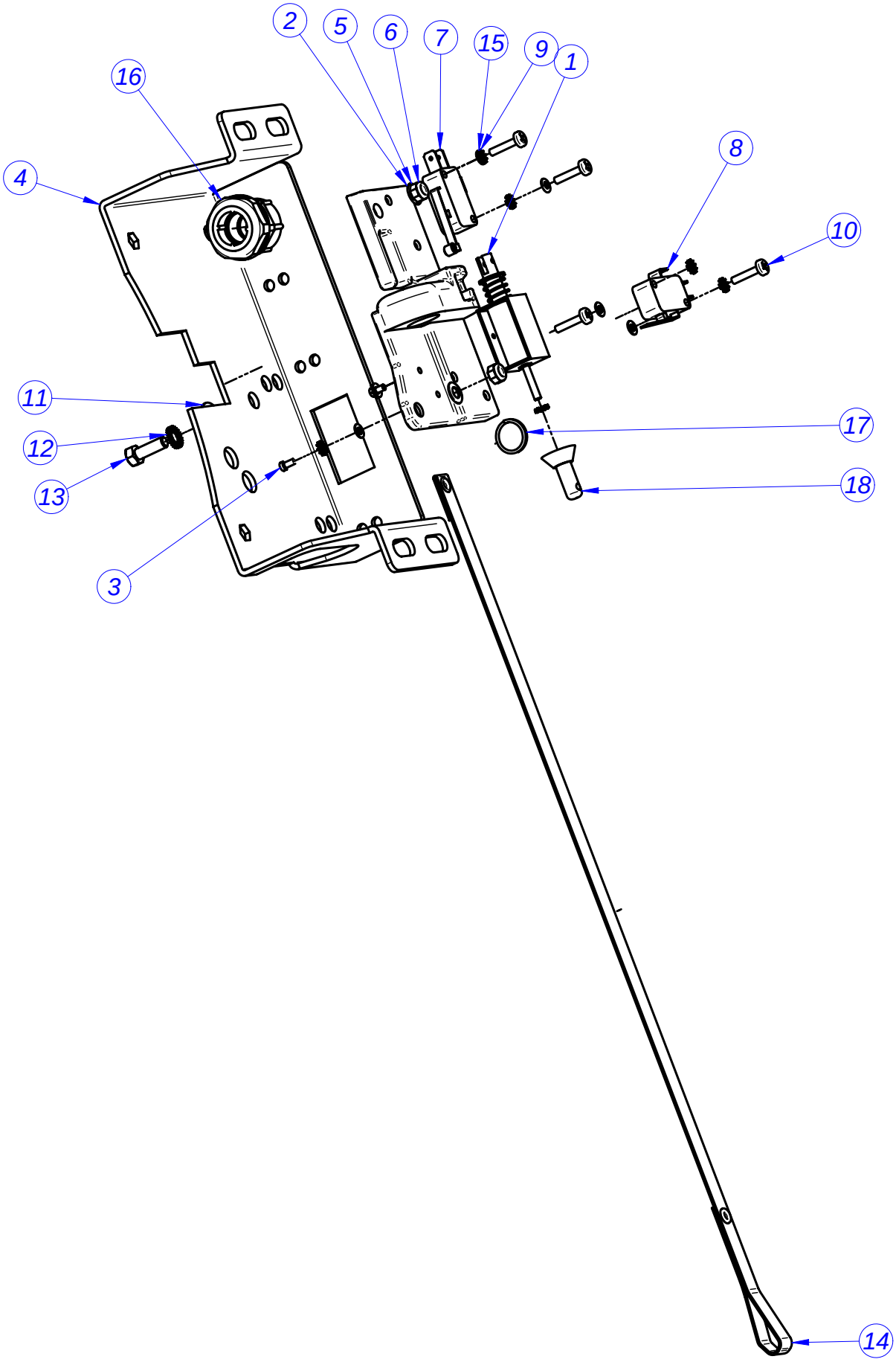
2
5
6
7
15
9
1
16
8
4
10
11
17
12
18
13
3
14

Nº	DENOMINACION	LR-10	LA-10	LR-13	LA-13	LR-18	LA-18	LR-25	LA-25	CODIGO
1	ELECTROIMAN PUERTA	1	1	1	1	1	1	1	1	P613002000
2	BASE CIERRE V3	1	1	1	1	1	1	1	1	P620534000
3	TORN. ALLEN M2.5x5	2	2	2	2	2	2	2	2	Q151396000
4	CALZO CIERRE FAGOR 13,18,25	1	1	1	1	1	1	1	1	P620530000
5	ARANDELA A5	2	2	2	2	2	2	2	2	Q232030000
6	TUER.AUTOB.M5	2	2	2	2	2	2	2	2	Q222030000
7	INTERRUPTOR PUERTA	1	1	1	1	1	1	1	1	R010534000
8	INTERRUPTOR PUERTA PLANO	1	1	1	1	1	1	1	1	P620526000
9	ARAND.ABAN. A.3 A304	8	8	8	8	8	8	8	8	Q242010000
10	TORNILLO ALOMADO M3X15	4	4	4	4	4	4	4	4	Q032012000
11	ARANDELA 16X6X1.2 A.304	1	1	1	1	1	1	1	1	Q302022000
12	ARAND.ABAN. A5 A.304	1	1	1	1	1	1	1	1	Q242030000
13	TORN.EXA. M5X15 A.304	1	1	1	1	1	1	1	1	Q012032000
14	TIRADOR PUERTA	1	1	1	1	1	1	1	1	P620520000
15	ARANDELA PLANA A3,DIN125	6	6	6	6	6	6	6	6	Q232010000
16	PRENSA ESTOPAS	1	1	1	1	1	1	1	1	R073004000
17	ANILLO ELECTROIMAN	1	1	1	1	1	1	1	1	P620525000
18	DESBLOQUEO	1	1	1	1	1	1	1	1	P620529000
19	CABLEADO CIERRE	1	1	1	1	1	1	1	1	P633010000

Nº	DENOMINACION	LR-10	LA-10	LR-13	LA-13	LR-18	LA-18	LR-25	LA-25	CODIGO
1	RODAMIENTO EXTERIOR	1	1							P616008000
				1	1	1				P626008000
							1	1		P626009000
									1	P644904000
2	RODAMIENTO INTERIOR	1	1							P616009000
				1	1	1				P626009000
							1	1		P636008000
									2	P644903000
3	JUNTA CASQ. CONTRARETEN	1	1	1	1	1				P616013000
							1	1		P636011000
									1	P646017000
4	RETEN V-RING 1	1	1							P634911000
				1	1	1				P624914000
							1	1		P634912000
									1	P644916000
5	RETEN V-RING 2	1	1							P614911000
				1	1	1				P624913000
							1	1		P634911000
										P644915000
6	JUNTA TÓRICA	1	1							Q307073000
				1	1	1				Q307075000
							1	1		Q307077000
									1	Q307083000
7	ARANDELA SEGURIDAD	18	18	6	6	6				Q271302000
				12	12	12	18	18		Q271306000
									30	Q271304000
8	ARANDELA SEG. POLEA	1	1	1	1	1	1	1	1	Q301329000
9	ANILLO SEGURIDAD	1	1							Q301044000
				1	1	1				Q301030000
							1	1		Q301036000
									1	Q301045000
10	GRASA RETENES	1	1	1	1	1	1	1	1	P536544000