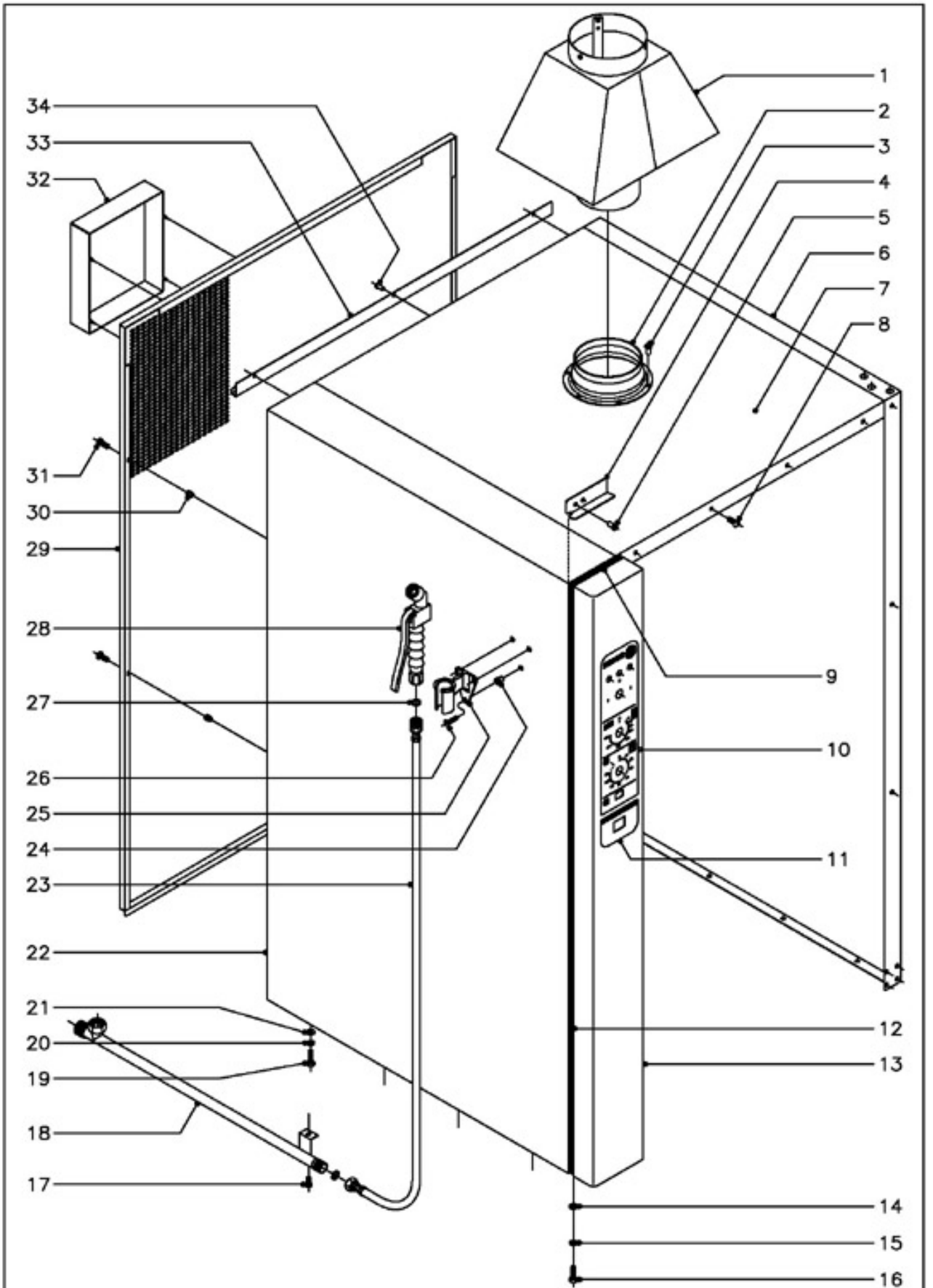

1	T122820
	R292646
	R272614
	Q412002
2	R292645
3	Q412000
4	R662811
5	Q412002
6	T152805
7	T152806
	Q221343
	Q232040
	Q262040
	Q012042
8	Q152017
9	3715400
10	T013006
11	R723008
12	3715400
13	T102813
14	Q232040
15	Q262040
16	Q012042
17	Q012042
18	R685003
19	Q012042
20	Q262040
21	Q232040
22	T152807
23	R095006
24	Q221341
25	R095007
26	Q042022
27	-
28	R095005
29	T152812
30	Q221342
31	Q152038
32	T082808
33	T152810
34	Q412002

N plano	Firma	Fecha	Aparato	Lamina	
C-1357		5-2003	MUEBLE HORNOS A GAS HCG-20/21	1	Fagor Industrial S.Coop. Onate

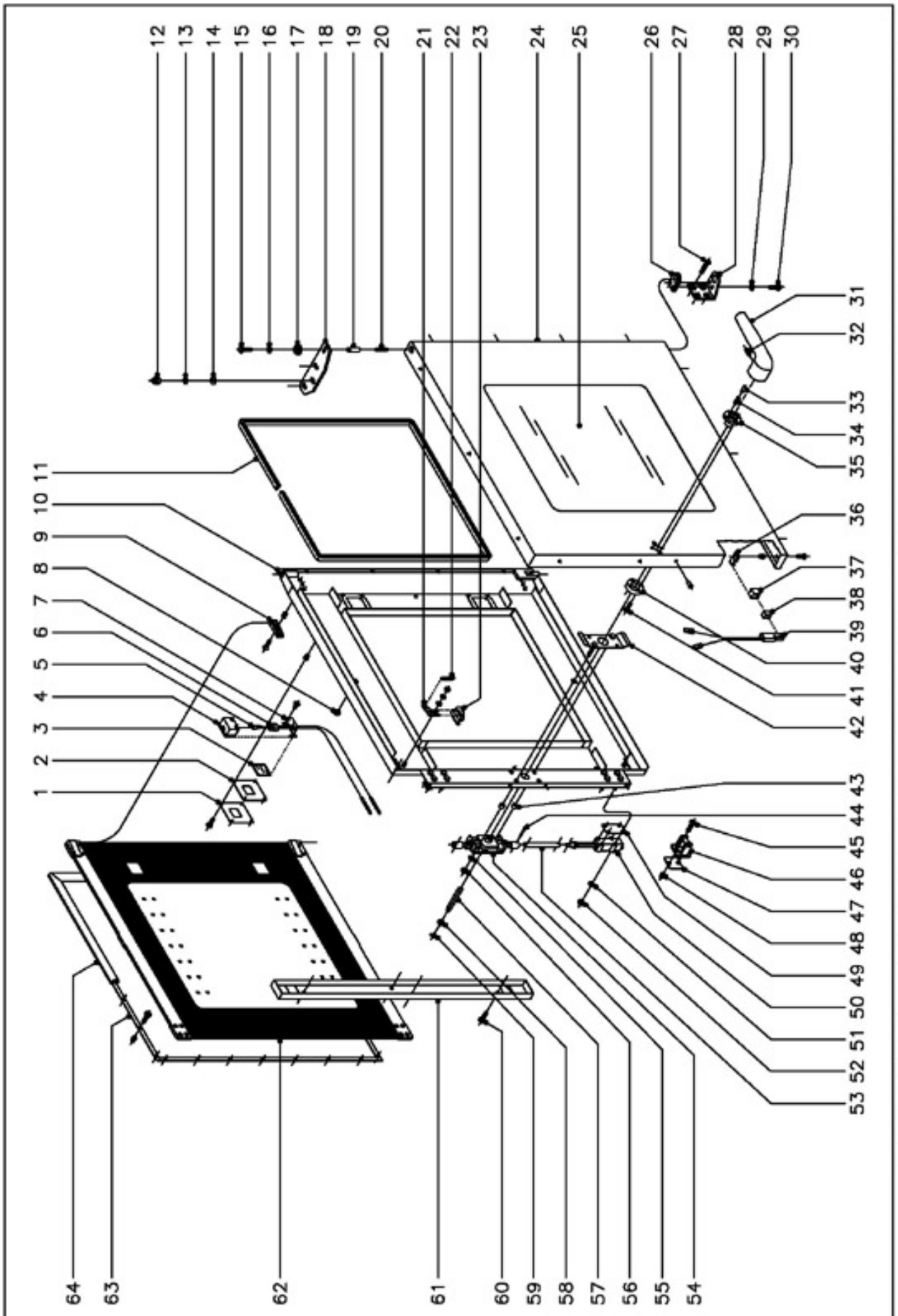

1	R670608
	Q032021
	Q222041
2	R670609
3	R670618
4	R670610
5	R663013
6	R663058
7	R670611
	Q042031
8	R670617
9	R670615
	Q042032
	Q222011
10	R140500
11	3715200
12	Q212051
13	Q242050
14	Q302025
15	Q012042
16	Q242040
17	R662807
18	T130500
19	R660534
20	Z850519
21	R670612
	Q302022
	Q242040
	Q162040
22	R660605
23	R670613
24	R140600
	Q412002
25	R140604
26	R660549
27	Q062040
28	R660551
29	Q242040
30	Q012041
31	T130502

32	Q132042
33	T130507
34	T130506
35	T130515
36	T130513
37	Z200507
38	Z200506
39	Z100522
40	T130514
41	Q032032
42	T130511
43	Z608410
44	Q352001
45	Q042043
46	R260545
47	R660538
48	Q221343
49	T080503
50	T080504
51	Q262040
52	Q162040
53	R090514
54	T130509
55	Q262040
56	Q162040
57	T130508
58	T130505
59	Q271033
60	Q032031
60	Q032021
61	T140502
61	1100002810
62	R140507
	Q033021
	Q222041
63	R140506

N plano	Firmo	Fecha	Aparato		Lamino	
C-1358		5-2003	PUERTA HORNOS A GAS HCG-20/21		2	Fagor Industrial S.Coop. FAGOR Oñate

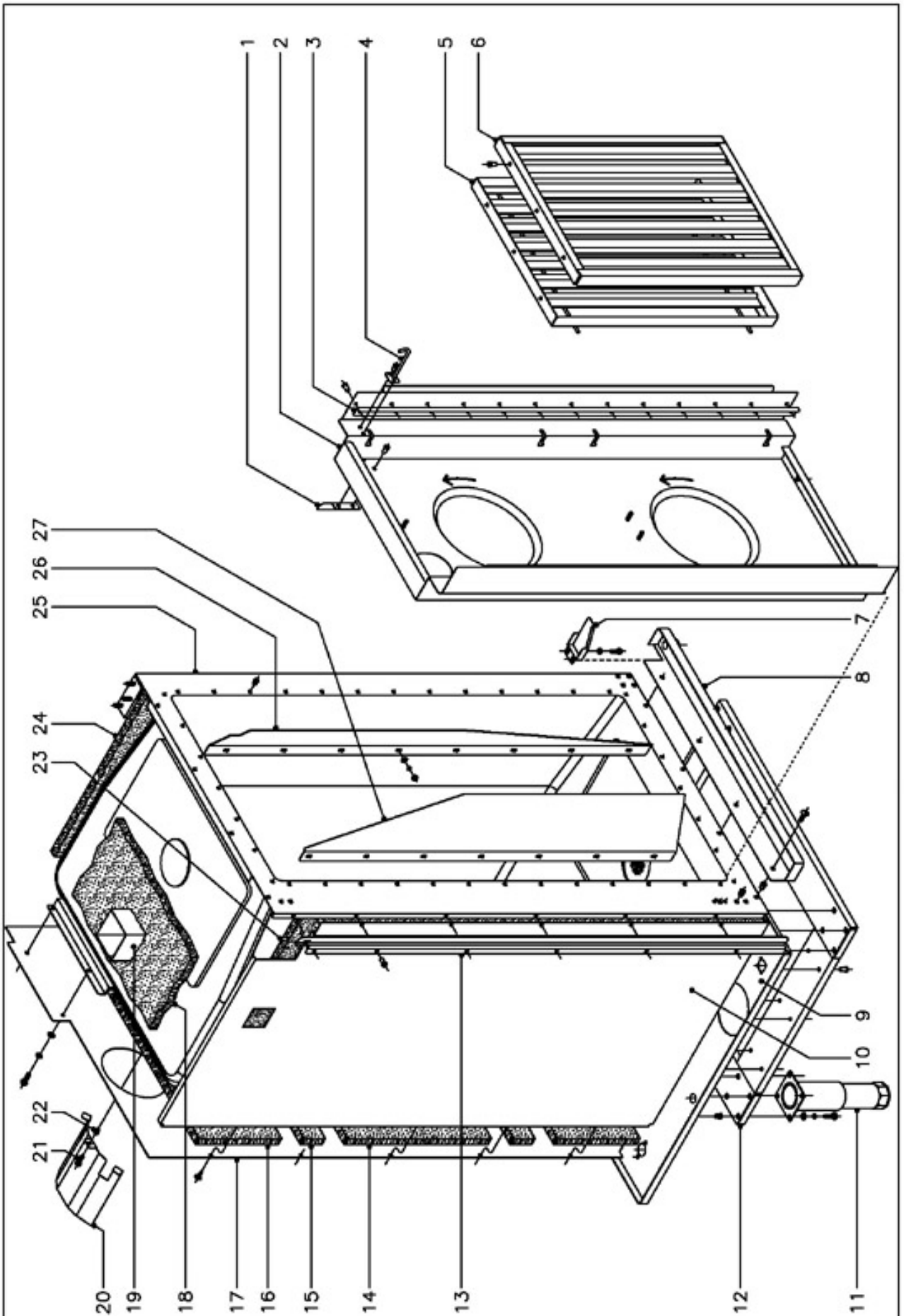

1	R292647
	Q412002
2	T152611
3	R092616
	Q412002
4	R142615
	Q412002
5	R092621
6	R092618
	Q412002
7	R662800
	Q221342
	Q232030
	Q012031
8	T142820
	Q221343
	Q152017
9	T152811
10	T152604
11	R092830
	Q012043
	Q262040
	Q232040
	Q221343
12	T152801
	Q412002
13	R092662
	Q412002
14	U675605
15	R662616
16	R032625
17	T142608
	Q151301
	Q012042
	Q262040
	Q232040
18	R682623
19	T152619
	Q412002
20	R142628
s/n	R142614
21	Q012042
22	Q221343
23	R142608
24	R142608
25	T152600
26	T152617
27	T152616
	Q232040
	Q262040
	Q162040

N plano	Firma	Fecha	Aparato	Lamina	
C-1359		5-2003	MUEBLE INTERIOR HORNOS A GAS HCG-20/21	3	Fagor Industrial S.Coop. FAGOR Oñate

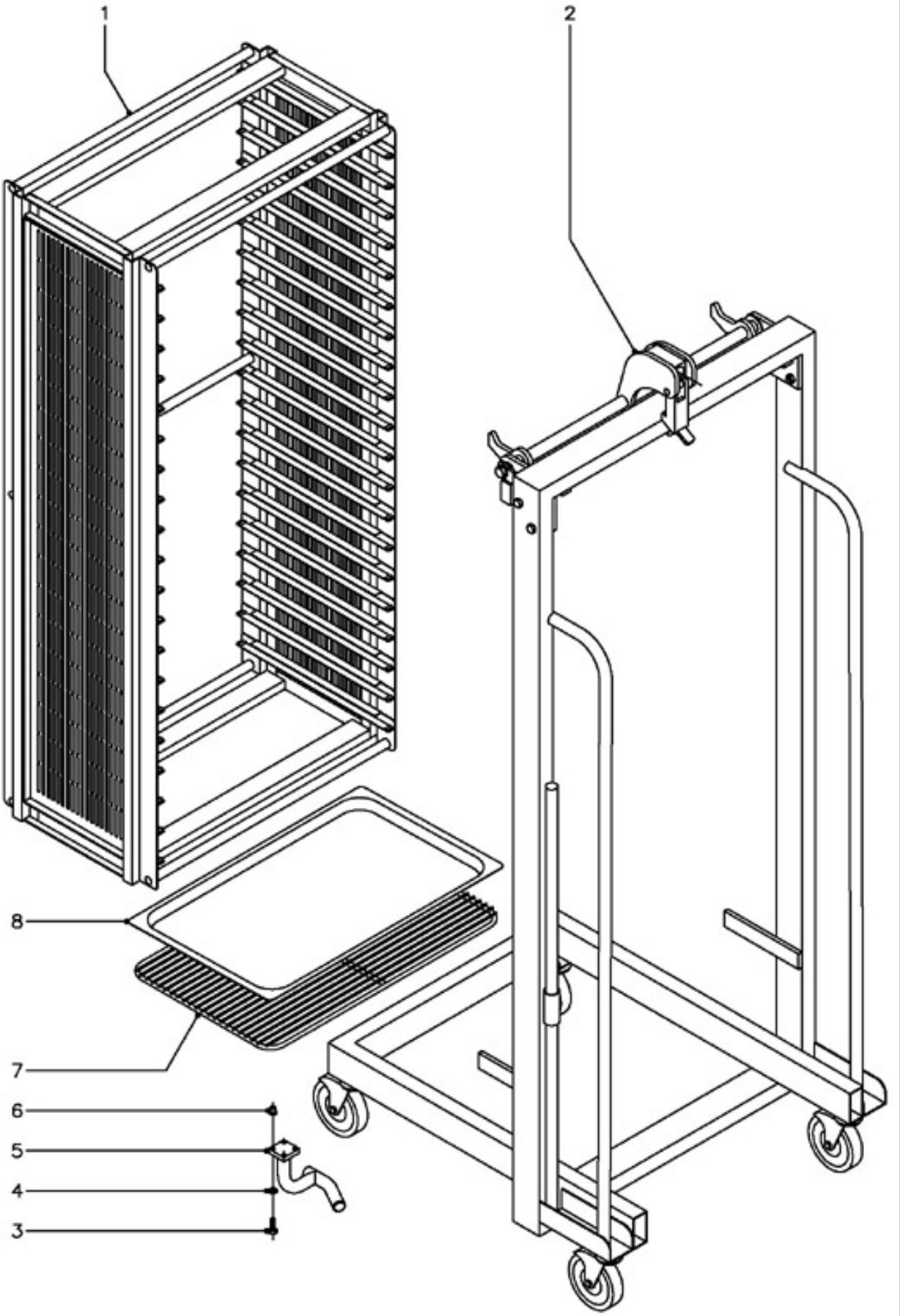

1	R145640
s/n	R145650
2	R145630
3	Q012033
4	Q242030
5	T132815
s/n	T132814
6	Q221342
7	R682676
s/n	R672665
8	R032605
s/n	R252816

N plano	Firma	Fecha	Aparato	Lamina	
C-1360		5-2003	CARRO Y EXTRUCTURA PORTABANDEJAS HORNO A GAS HCG-20/21	4	Fagor Industrial S.Coop. FAGOR Oñate

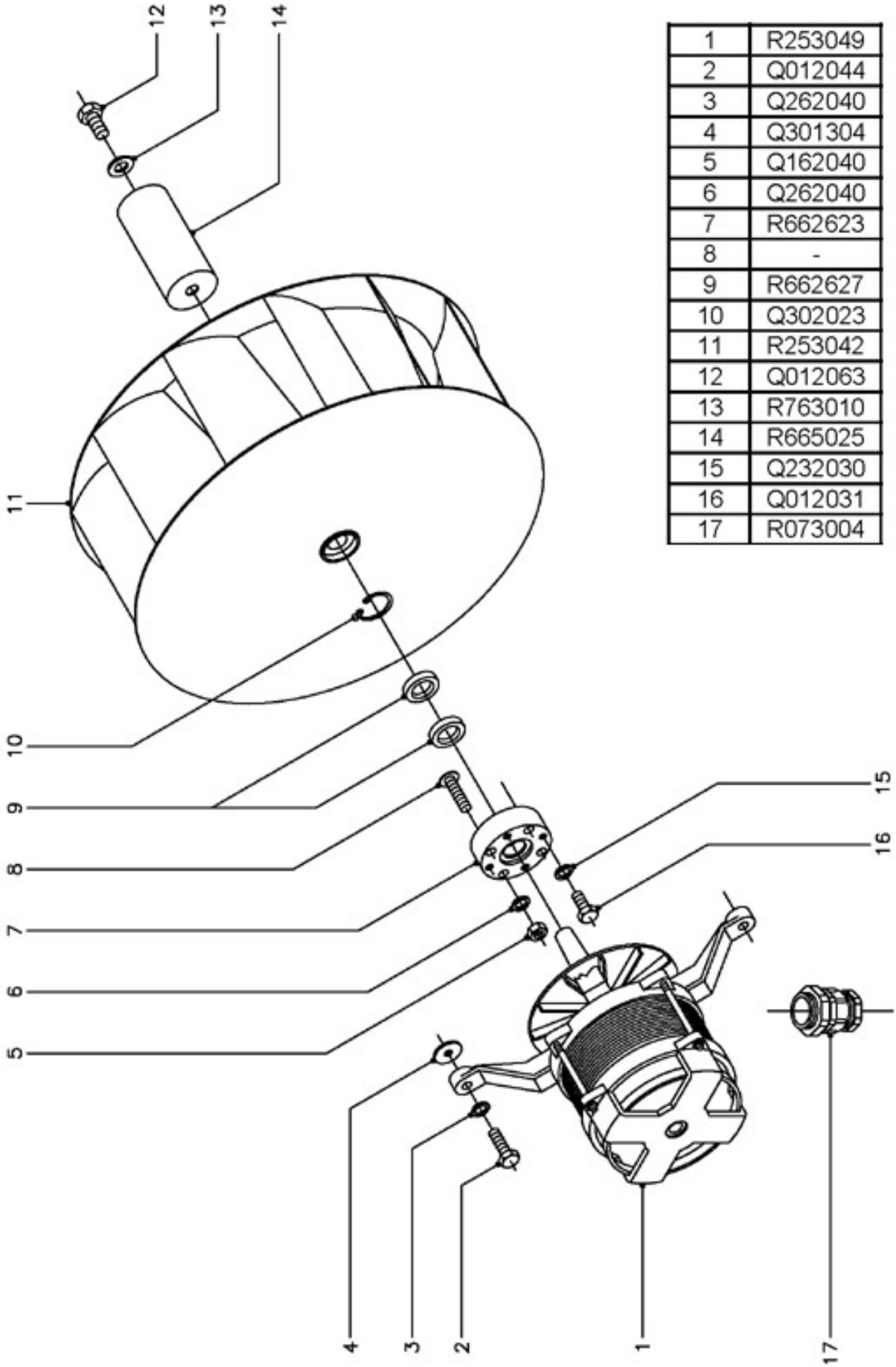

1	R253049
2	Q012044
3	Q262040
4	Q301304
5	Q162040
6	Q262040
7	R662623
8	-
9	R662627
10	Q302023
11	R253042
12	Q012063
13	R763010
14	R665025
15	Q232030
16	Q012031
17	R073004

N plano	Firma	Fecha	Aparato	Lamina	
C-1361		5-2003	TURBINA HORNO A GAS HCG-20/21	5	Fagor Industrial S.Coop. FAGOR Oñate

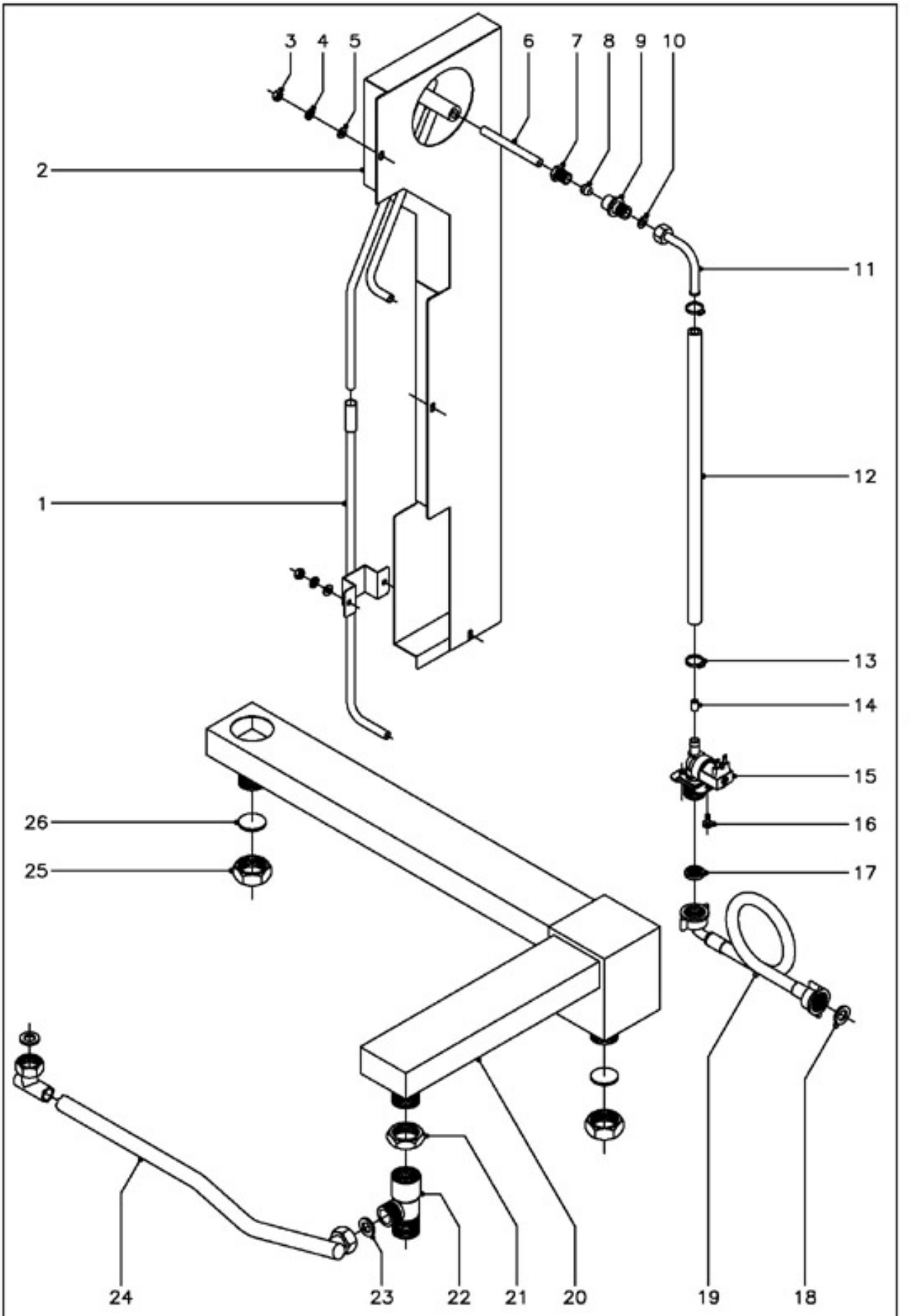

1	T155012
2	T152607
3	Q162030
4	Q242030
5	Q232030
6	R665024
7	R695003
8	R695004
9	-
10	Q306026
11	R695017
12	3676900
13	Q881302
14	R715011
15	Z701135
16	Q032021
17	Z701132
18	Q307031
19	Z601114
20	-
21	Q223014
22	R145036
23	Q307031
24	R145034
25	R665053
26	R015011

N plano	Firma	Fecha	Aparato	Lamina	
C-1362		5-2003	CIRCUITO DE AGUA HORNO A GAS HCG-20/21	6	Fagor Industrial S.Coop. FAGOR Oñate

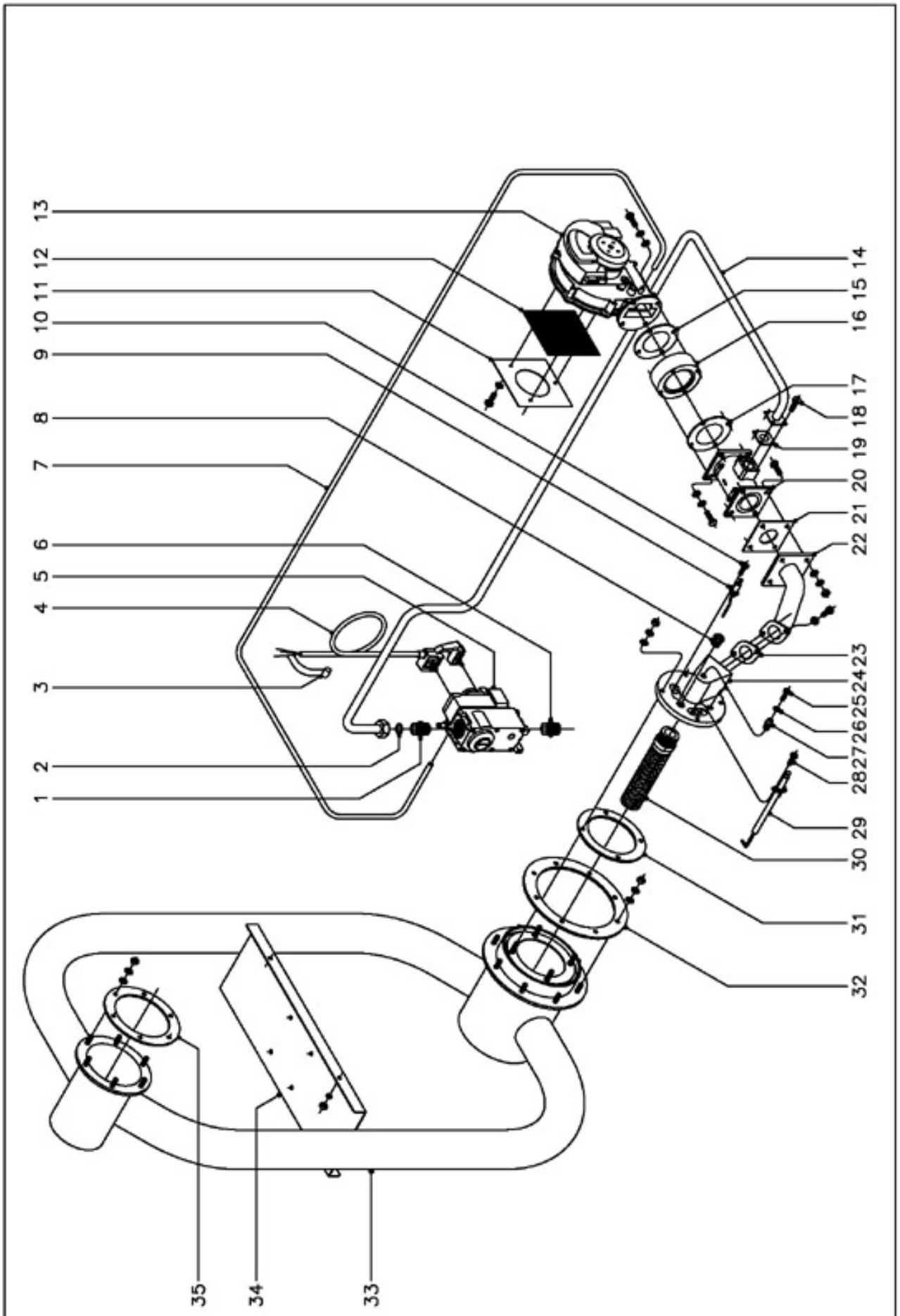

1	S205023
2	Q306012
3	Z233012
4	T085012
5	T155018
5	T155019
5	T155020
5	T155021
6	S205023
7	3702400
8	R725015
9	T135705
10	Q153021
11	T115096
	Q032021
	Q242020
12	T115095
13	T143000
14	T025000
15	T115081
16	T115076
17	T115081
18	Q032021
19	T115080
20	T115075
21	T115079
22	T115077
23	T095021
24	R725710
	Q232030
	Q242030
	Q163030
25	Q152024
26	R725061
27	R725017
28	Q153021
29	T135706
30	T145712
31	R725055
32	T145710
33	T155700
	Q232040
	Q262040
	Q163140
34	T092615
	Q262040
	Q162040
35	T145711

N plano	Firma	Fecha	Aparato	Lamina	
C-1363		5-2003	PARTE FUNCIONAL GAS HORNO A GAS HCG-20/21	7	Fagor Industrial S.Coop. FAGOR Oñate

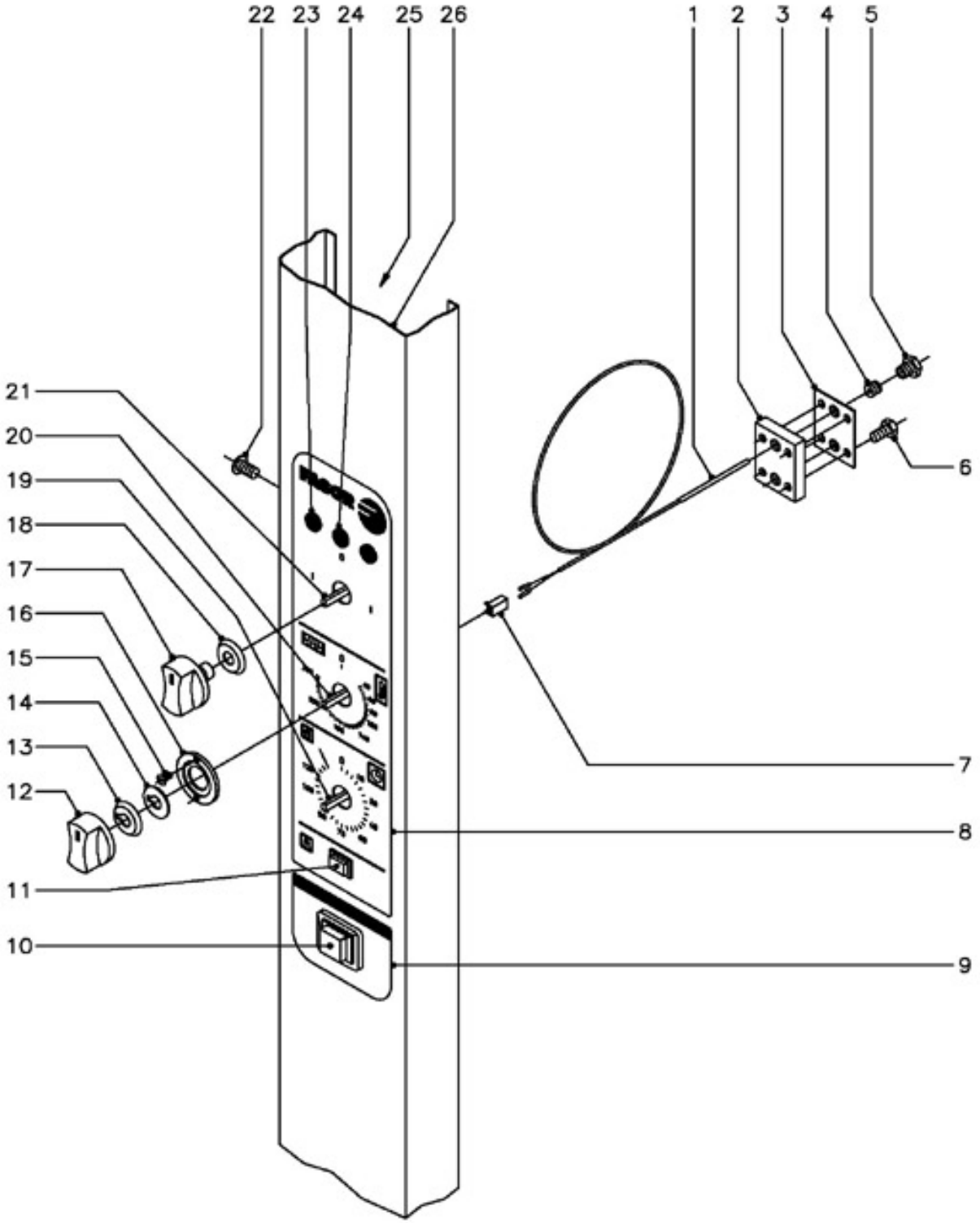

1	R663090
2	R662659
3	R692811
4	R662652
5	R662629
6	Q012021
7	R663092
8	T013006
9	R723008
10	Z213033
11	R663032
12	R663063
13	R663045
14	R662810
15	Q151346
16	R662809
17	R663062
18	R663046
19	R723000
20	R743013
	R663036
21	T013001
22	Q152004
23	R693056
24	R693055
25	T012803
26	T102813

N plano	Firma	Fecha	Aparato	Lamina	
C-1364		5-2003	PARTE ELECTRICA PORTAMANDOS HORNO A GAS HCG-20/21	8	Fagor Industrial S.Coop. FAGOR Oñate

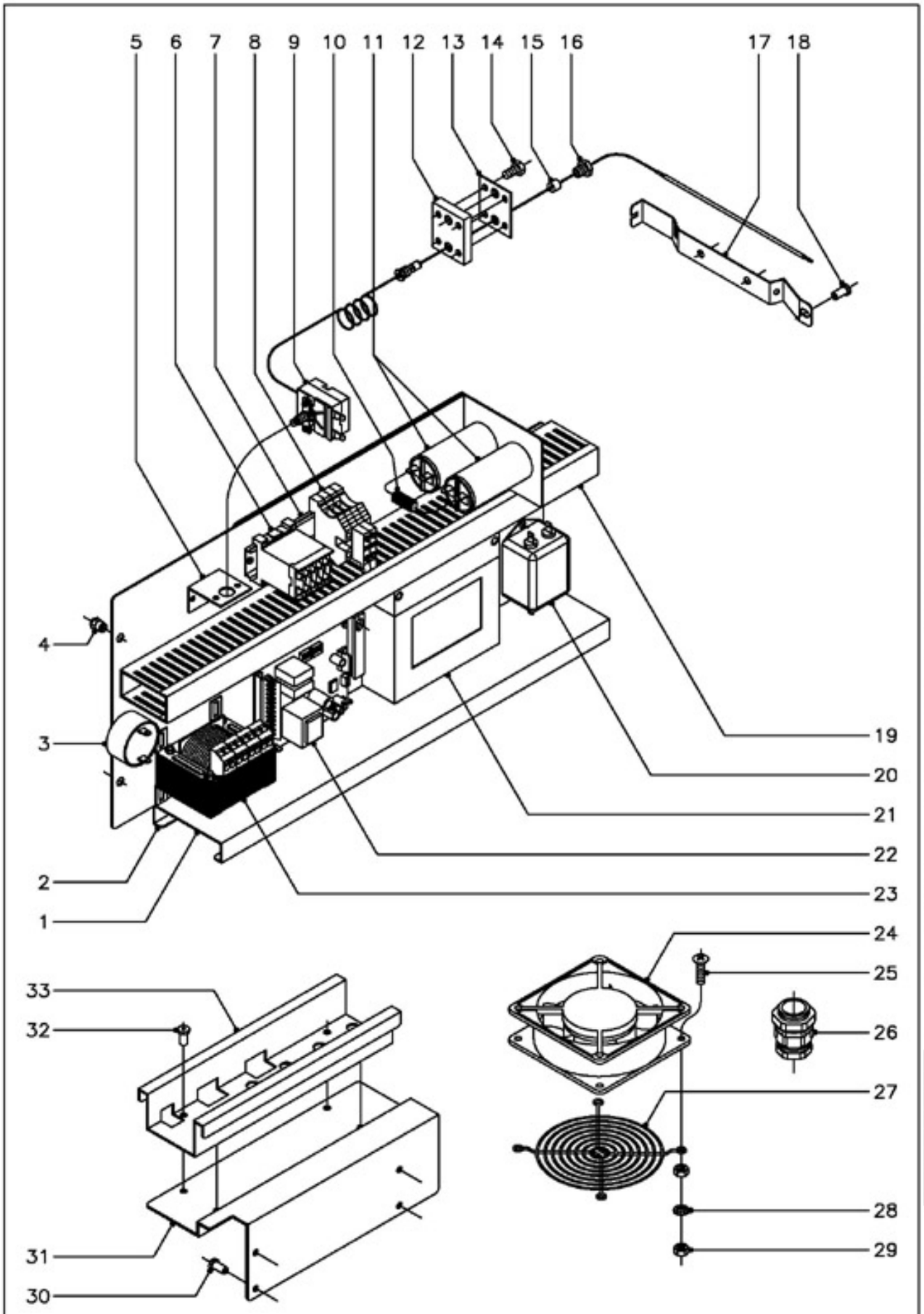

1	T083003
2	R723101
	Q412002
3	R693067
4	Q221342
5	R343039
6	Z683087
7	R663055
8	R073005
	R723015
	P453026
	Z263303
9	R243016
	Q162050
10	R073008
11	T093005
12	R662659
13	R692811
14	Q012021
15	R662662
16	R662629
17	R662630
18	Q412002
19	3715520
20	T113023
21	Z953004
22	T083002
	T133007
	T133008
	Q161310
23	R503005
24	Z103066
25	Q042022
26	R073004
27	T113015
28	Q242020
29	Q162020
30	Q411304
31	T083004
32	Q411304
33	R342821

		BUTANO - PROPANO 50 Hz.
5	T155018	Valvula Honeywell 50Hz. (B.P.)
		BUTANO - PROPANO 60 Hz.
5	T155020	Valvula Honeywell 60Hz. (B.P.)
		GAS NATURAL 50 Hz.
5	T155019	Valvula Honeywell 50Hz. (G.N.)
		GAS NATURAL 60 Hz.
5	T155021	Valvula Honeywell 60Hz. (G.N.)

N plano	Firma	Fecha	Aparato	Lamina
C-1365		5-2003	PANEL CUADRO ELECTRICO HORNO A GAS HCG-20/21	9

Fagor Industrial S.Coop. FAGOR
Onate