SIMAG

SDN 145
SDN 215

R 404 A VERSION

SPARE PARTS LIST
CATALOGO RICAMBI
CATALOGUE PIÈCES DÉTACHÉES
ERSATZTEILENKATALOG

090090.07 REV. 11/2009

PAGE PAGINA PAGE SEITE	TABLE OF CONTENTS	INDICE	TABLE DES MATIERES	INHALTVERZEICHNIS
1	TABLE OF CONTENTS	INDICE	TABLE DES MATIERES	INHALTVERZEICHNIS
2/3	UNIT PANELS	ASSIEME MOBILE	ENS. CAROSSERIE	MACHINE GEHAUSE
4/5	REFRIGERANT SYSTEM AIR COOLED	SISTEMA REFRIGERANTE RAFFR. AD ARIA	CIRCUIT FRIGORIFIQUE REFROID. A AIR	GEFRIERSYSTEM LUFTGEKUEHLT
6/7	REFRIGERANT SYSTEM WATER COOLED	SISTEMA REFRIGERANTE RAFFR. AD ACQUA	CIRCUIT FRIGORIFIQUE REFROID. A EAU	GEFRIERSYSTEM WASSERGEKUEHLT
8/9	WATER SYSTEM	CIRCUITO IDRAULICO	CIRCUIT HYDRAULIQUE	WASSER SYSTEM
10/11	CONTROL BOX	SCATOLA DI CONTROLLO	BOITE ELECTRIQUE	SCHALTSCHRANK
12	COMPRESSOR AND ELECTRIC COMPONENT CHARTS	TABELLA COMPRESSORI E COMPONENTI ELETTRICI	LISTE DES COMPRESSEURS ET COMPOSANTS ELECTRIQUE	KOMPRESSOR UND ELEKTRISCHER TEILLISTE

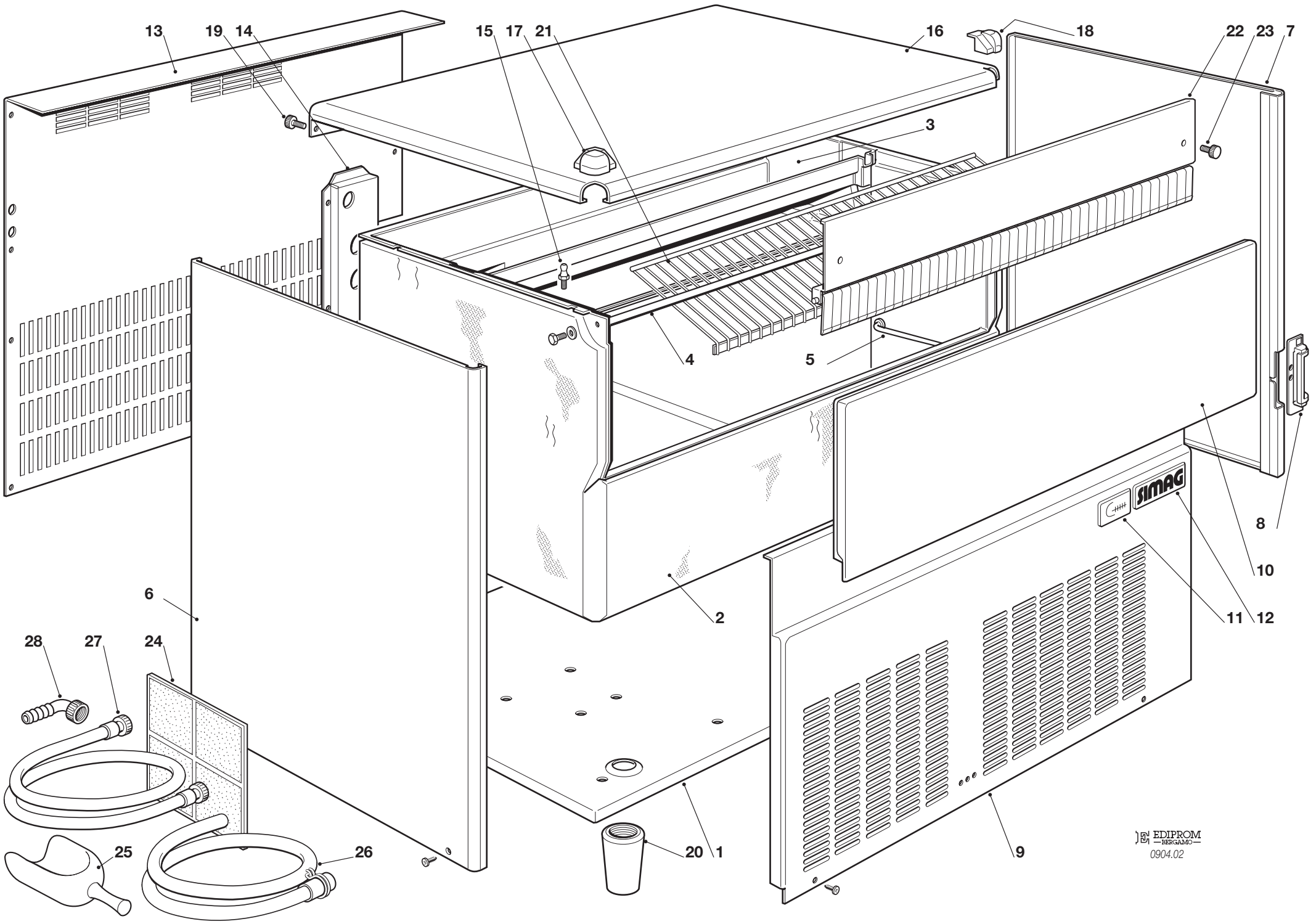
13
19
14
15
17
21
16
18
22
23
7
3
4
5
8
10
6
2
11
12
28
27
24
25
26
20
1
9
SIMAG
EDIPROM
BERGAMO
0904.02

SDN 145-215 - UNIT PANELS - ASSIEME MOBILE - ENS. CARROSSERIE - MACHINE GEHAUSE

ITEM NO POS. NO REP. NO REF. NO	PART NO CODICE REFERENCE STUECK NR	DESCRIPTION	DESCRIZIONE	DESIGNATION	BESCHREIBUNG
1	781406 18	BASE	PIASTRA DI BASE	PLAQUE DE BASE	GRUNDPLATTE
2	060524 05 060524 06	INSULATED BIN ASSY SDN 145 INSULATED BIN ASSY SDN 215	ASSIEME CELLA ISOLATA SDN 145 ASSIEME CELLA ISOLATA SDN 215	ENS. CABINE SDN 145 ENS. CABINE SDN 215	ISOLIEREISSPEICHER SDN 145 ISOLIEREISSPEICHER SDN 215
3	Z1CE011	EVAPORATOR HOUSING	INVOLUCRO EVAPORATORE	CHAMBRE INTERIEUR	CELLE INTERN
4	732016 11	BIN DOOR BRACKET	ASTA SPORTELLO	TIGE PORTE	KLAPPENACHSE
5	732017 02	BULB HOLDER	TUBO PORTABULBO	TUBE PORTEBULBE	FUEHLERHALTER
6	722382 00 722386 00	LEFT SIDE PANEL SDN 145 LEFT SIDE PANEL SDN 215	PANNELLO SINISTRO SDN 145 PANNELLO SINISTRO SDN 215	JOUE GAUCHE SDN 145 JOUE GAUCHE SDN 215	LINK. GEHÄUS. EDELST. SDN 145 LINK. GEHÄUS. EDELST. SDN 215
7	722381 00 722385 00	RIGHT SIDE PANEL SDN 145 RIGHT SIDE PANEL SDN 215	PANNELLO DESTRO SDN 145 PANNELLO DESTRO SDN 215	JOUE DROITE SDN 145 JOUE DROITE SDN 215	RECH. GEHÄUS. EDELST. SDN 145 RECH. GEHÄUS. EDELST. SDN 215
8	660883 00	FRONT SWITCH PLASTIC PROT	CARTER PROTEZIONE INTERRUT	CARTER PROTECTION INTERRUPT	SCHALTERABDECKUNG
9	722380 00 722387 00	FRONT PANEL SDN 145 FRONT PANEL SDN 215	PANNELLO ANTERIORE SDN 145 PANNELLO ANTERIORE SDN 215	PANNEAU AVANT SDN 145 PANNEAU AVANT SDN 215	VORDERE WAND ED.T. SDN 145 VORDERE WAND ED.T. SDN 215
10	060491 26	BIN DOOR	SPORTELLO	PORTE CABINE	SPEICHERTUER
11	650976 08 650976 09	SDN 145 LABEL SDN 215 LABEL	TARGHETTA SDN 145 TARGHETTA SDN 215	EMBLEME SDN 145 EMBLEME SDN 215	SDN 145 ABGEBILDET SDN 215 ABGEBILDET
12	650976 00	SIMAG LOGO	TARGHETTA SIMAG	EMBLEME SIMAG	SIMAG ABGEBILDET
13	702567 00 702576 00	REAR PANEL SDN 145 REAR PANEL SDN 215	PANNELLO POSTERIORE SDN 145 PANNELLO POSTERIORE SDN 215	PANNEAU POSTERIEUR SDN 145 PANNEAU POSTERIEUR SDN 215	HINTERE ABDECKUNG SDN 145 HINTERE ABDECKUNG SDN 215
14	702334 00	METAL BRACKET FOR FITTING	SUPPORTO ATTACCHI	SUPPORT DE RACCORDS	METALLTRÄGER
15	650790 00	STUD	PERNO	AXE	STIFT
16	722383 00	TOP PANEL	PANNELLO SUPERIORE INOX	ENS. COUVERCLE	DECKEL GESAMTHEIT
17	660884 01	LEFT TOP CAP	TAPPO IN PLASTICA SINISTRO	CAPUCHON EN PLAST. GAUCHE	PLASTIK PROFEN LINK
18	660884 00	RIGHT TOP CAP	TAPPO IN PLASTICA DESTRO	CAPUCHON EN PLAST. DROITE	PLASTIK PROFEN RECHT
19	650806 00	REAR STUD	PERNO POSTERIORE	AXE ARRIÉRE	TRÄGEN - HINTEN
20	660638 02	LEG	PIEDE REGOLABILE	PIED RÉGLABE	GERÄTEFUSS
21	Z1AC005	ICE DEFLECTOR	GRIGLIA SCORRIMENTO CUBETTI	GRILLE GLISSEMENT GLAÇON	ABGLEITGRILL
22	060524 10	CURTAIN ASSY	ASSIEME TENDINA	ENS. LAMELLE	ABDECKKLAPPE GESAMTHEIT
23	Z1AC015	KNURLED SCREW	VITE GODRONATA	VIS MOLETÉE	SCHRAUBE
24	660515 03	AIR FILTER	FILTRO ARIA	FILTRE A AIR	LUFT FILTIER
25	650071 00	ICE SCOOP	SESSOLA	SASSE	EISSCHAUFEL
26	060513 01	KIT WATER DRAIN PIPE	KIT TUBO SCARICO ACQUA	KIT TUYAU VIDANGE EAU	WASSER SLAUFSCHLAUCH
27	060513 00	KIT WATER SUPPLY PIPE	KIT TUBO ALIM. ACQUA	KIT TUYAU D'ALIM. EAU	WASSER ANSCHLUSSCHLAUCH
28	Z1AD011	ELBOW WITH RING NUT	CURVA CON GHIERA	COUDE AVEC BAGUE	KRUMMER

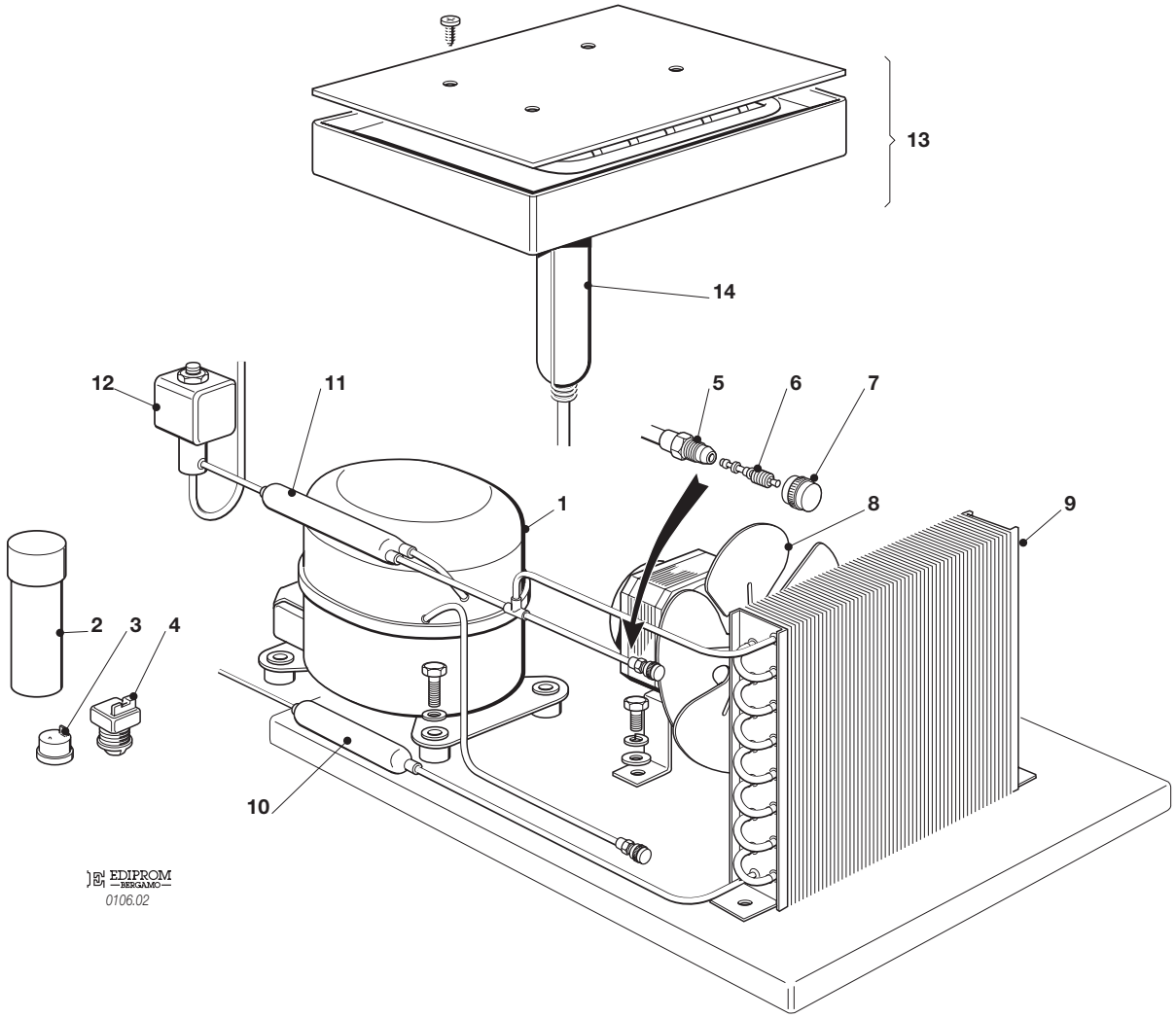
13
14
12
11
5
6
7
1
8
9
2
3
4
10
EDIPROM
BERGAMO
0106.02

SDN 145-215 - REFRIGERANT SYSTEM AIR COOLED - SISTEMA REFRIGERANTE RAFFR. AD ARIA
CIRCUIT FRIGORIFIQUE REFROID. PAR EAU - WASSERGEKÜHLT GEFRIERSYSTEM

ITEM NO POS. NO REP. NO REF. NO	PART NO CODICE REFERENCE STUECK NR	DESCRIPTION	DESCRIZIONE	DESIGNATION	BESCHREIBUNG
1	670099 04 670099 05	COMPRESSOR - SDN 145 COMPRESSOR - SDN 215	COMPRESSORE - SDN 145 COMPRESSORE - SDN 215	COMPRESSEUR - SDN 145 COMPRESSEUR - SDN 215	KOMPRESSOR - SDN 145 KOMPRESSOR - SDN 215
2/a	620167 00 620167 00	START CAPACITOR SDN 145 START CAPACITOR SDN 215	CONDENS. DI SPUNTO SDN 145 CONDENS. DI SPUNTO SDN 215	CAPACITE'/DEMARRAGE SDN 145 CAPACITE'/DEMARRAGE SDN 215	START KONDENSATOR SDN 145 START KONDENSATOR SDN 215
2/b	620167 21 620167 24	RUN CAPACITOR SDN 145 RUN CAPACITOR SDN 215	CONDENS. DI MARCIA SDN 145 CONDENS. DI MARCIA SDN 215	CAPACITE' PERMANENCE SDN 145 CAPACITE' PERMANENCE SDN 215	BETRIEB KONDENSATOR SDN 145 BETRIEB KONDENSATOR SDN 215
3	620058 78 620058 57	PROTECTOR SDN 145 PROTECTOR SDN 215	PROTETTORE SDN 145 PROTETTORE SDN 215	PROTECTEUR SDN 145 PROTECTEUR SDN 215	SCHUTZGERAT SDN 145 SCHUTZGERAT SDN 215
4	620057 46 620057 47	RELAY SDN 145 RELAY SDN 215	RELE' SDN 145 RELE' SDN 215	RELAIS SDN 145 RELAIS SDN 215	RELAIS SDN 145 RELAIS SDN 215
5	650109 00	VALVE BODY	CORPO VALVOLA	CORPS DE VANNE	VENTILGEHAUSE
6	670012 00	VALVE PISTON	PISTONCINO VALVOLA	PISTON	VENTILKOLBEN
7	650106 00	VALVE CAP	CAPPUCCIO VALVOLA	CAPUCHON DE VANNE	VENTILKLAPPE
8	620419 04 620419 34	FAN MOTOR BLADE	MOTOVENTILATORE VENTOLA	MOTO-VENTILATEUR HELICE	LÜFTERMOTOR FLÜGEL
9	620436 00 620434 00	AIR COOLED CONDENSER SDN 145 AIR COOLED CONDENSER SDN 215	CONDENSATORE ARIA SDN 145 CONDENSATORE ARIA SDN 215	CONDENSEUR SDN 145 CONDENSEUR SDN 215	KONDENSATOR SDN 145 KONDENSATOR SDN 215
10	670006 01	DRIER	FILTRO DEUMIDIFICATORE	FILTRE DESHYDRATEUR	TROCKNER
11	630137 01	MECHANICAL FILTER	FILTRO MECCANICO	FIL TRE MECANIQUE	MECHANISCHFIL TERN
12	620306 48 620306 46	HOT GAS VALVE COIL HOT GAS VALVE BODY	BOBINA VALVOLA GAS CALDO CORPO VALVOLA GAS CALDO	BOBINE VANNE GAZ CHAUDS CORP VANNE GAZ CHAUDS	HEISSGAZ VENTIL SPULE VENTILGEHAUSE
13	784486 00	EVAPORATOR ASSY	ASSIEME EVAPORATORE	ENS. EVAPORATEUR	VERDAMPFER
14	784484 01 784484 03	ACCUMULATOR ASSY SDN 145 ACCUMULATOR ASSY SDN 215	ASSIEME ACCUMULAT. SDN 145 ASSIEME ACCUMULAT. SDN 215	ENS. ACCUMULATEUR SDN 145 ENS. ACCUMULATEUR SDN 215	SAMMLER/ SAUGLEIT. SDN 145 SAMMLER/ SAUGLEIT. SDN 215

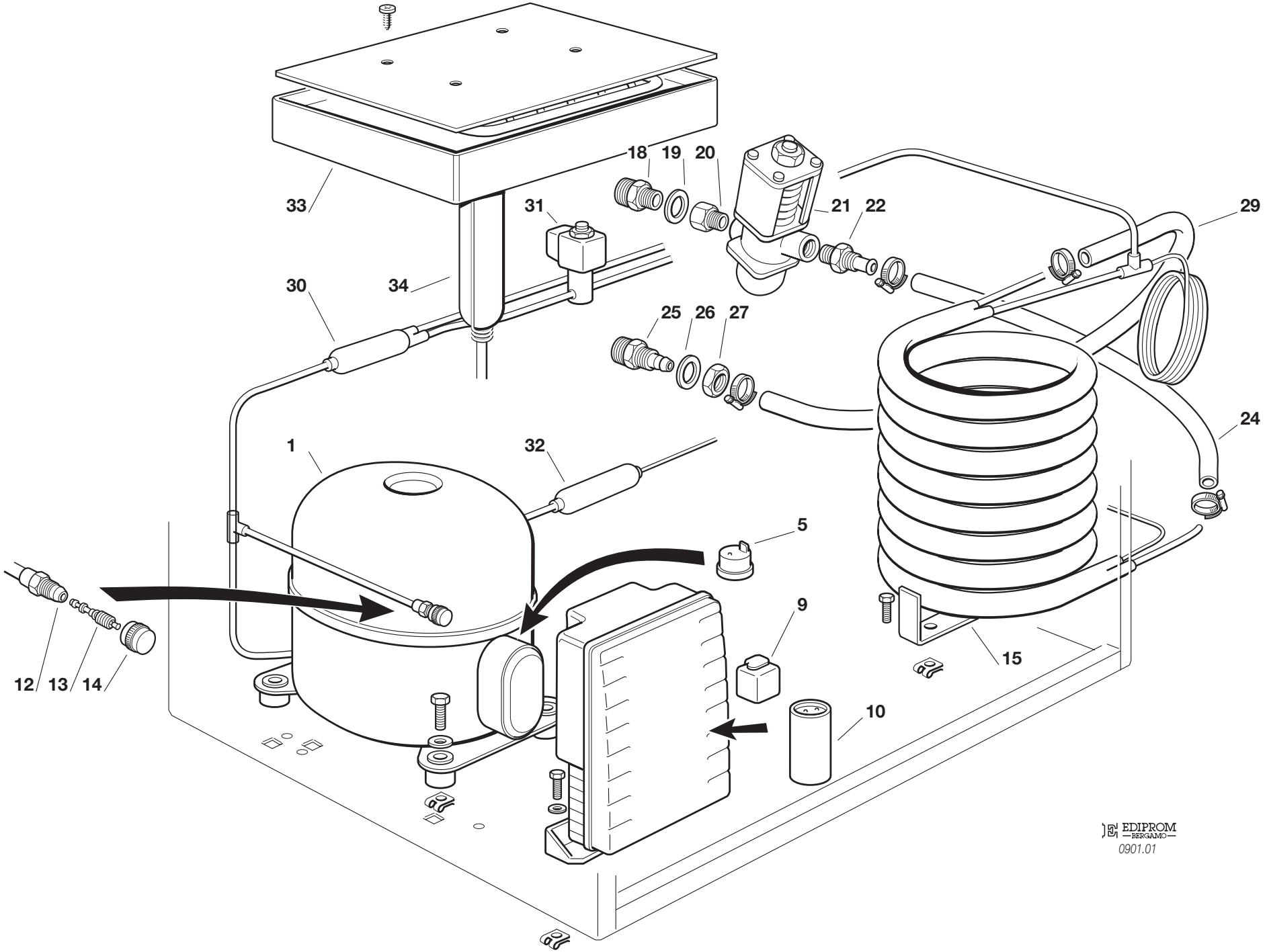
33
31
18
19
20
21
22
29
30
34
25
26
27
24
1
32
5
9
15
10
12
13
14
EDIPROM
BERGAMO
0901.01

SDN 145-215 - REFRIGERANT SYSTEM WATER COOLED - SISTEMA REFRIGERANTE RAFFR. AD ACQUA
CIRCUIT FRIGORIFIQUE REFROID. PAR EAU - WASSERGEKÜHLT GEFRIERSYSTEM

ITEM NO POS. NO REP. NO REF. NO	PART NO CODICE REFERENCE STUECK NR	DESCRIPTION	DESCRIZIONE	DESIGNATION	BESCHREIBUNG
1	670099 04 670099 05	COMPRESSOR - SDN 145 COMPRESSOR - SDN 215	COMPRESSORE - SDN 145 COMPRESSORE - SDN 215	COMPRESSEUR - SDN 145 COMPRESSEUR - SDN 215	KOMPRESSOR - SDN 145 KOMPRESSOR - SDN 215
5	620058 78 620058 57	PROTECTOR SDN 145 PROTECTOR SDN 215	PROTETTORE SDN 145 PROTETTORE SDN 215	PROTECTEUR SDN 145 PROTECTEUR SDN 215	SCHUTZGERAT SDN 145 SCHUTZGERAT SDN 215
9	620057 46 620057 47	RELAY SDN 145 RELAY SDN 215	RELE' SDN 145 RELE' SDN 215	RELAIS SDN 145 RELAIS SDN 215	RELAIS SDN 145 RELAIS SDN 215
10/a	620167 00 620167 00	START CAPACITOR SDN 145 START CAPACITOR SDN 215	CONDENS. DI SPUNTO SDN 145 CONDENS. DI SPUNTO SDN 215	CAPACITE'/DEMARRAGE SDN 145 CAPACITE'/DEMARRAGE SDN 215	START KONDENSATOR SDN 145 START KONDENSATOR SDN 215
10/b	620167 21 620167 24	RUN CAPACITOR SDN 145 RUN CAPACITOR SDN 215	CONDENS. DI MARCIA SDN 145 CONDENS. DI MARCIA SDN 215	CAPACITE' PERMANENCE SDN 145 CAPACITE' PERMANENCE SDN 215	BETRIEB KONDENSATOR SDN 145 BETRIEB KONDENSATOR SDN 215
12	650109 00	VALVE BODY	CORPO VALVOLA	CORPS DE VANNE	VENTILGEHAUSE
13	670012 00	VALVE PISTON	PISTONCINO VALVOLA	PISTON	VENTILKOLBEN
14	650106 00	VALVE CAP	CAPPUCCIO VALVOLA	CAPUCHON DE VANNE	VENTILKLAPPE
15	620495 02 620495 00	WATER CONDENSER SDN 145 WATER CONDENSER SDN 215	CONDENSATORE ACQUA SDN 145 CONDENSATORE ACQUA SDN 215	CONDENSEUR SDN 145 CONDENSEUR SDN 215	WASSER KONDENSATOR SDN 145 WASSER KONDENSATOR SDN 215
18	400053 00	NUT	DADO	ECROU	MUTTER
19	400052 00	WASHER	RONDELLA	RONDELLE	SCHEIBE
20	733204 00	WATER INLET FITTING	RACCORDO INGRESSO ACQUA	RACCORD ARRIVE'E D'EAU	WASSER EINLAUFSTÜCK
21	620111 00	WATER REGUL. VALVE	VALVOLA PRESSOSTATICA	VANNE A EAU PRESSOSTATIQUE	WASSERREGLERVENTIL
22	783208 02	COUPLING	RACCORDO FLANGIATO	RACCORD SORTIE EAU	WASSERREGLEREABFLUSSTUECK
24	281900 01	TUBE	TUBO IN PVC PER METRO	TUYAU EN PLAST. POUR METRE	PLASTIK ROHR-PRO METER
25	660291 00	TEE TUBE		RACCORD EVACUATION 3/4 GAS	3/4 GAS SCHLAUCH
26	400031 00	FIBER WASHER	RONDELLA IN FIBRA	RONDELLE EN FIBRE	FIBER SCHEIBE
27	400030 01	NUT	DADO	ECROU	MUTTER
29	281900 01	TUBE	TUBO IN PVC PER METRO	TUYAU EN PLAST. POUR METRE	PLASTIK ROHR-PRO METER
30	630137 01	MECHANICAL FILTER	FILTRO MECCANICO	FIL TRE MECANIQUE	MECHANISCHFIL TERN
31	620306 48 620306 46	HOT GAS VALVE COIL HOT GAS VALVE BODY	BOBINA VALVOLA GAS CALDO CORPO VALVOLA GAS CALDO	BOBINE VANNE GAZ CHAUDS CORP VANNE GAZ CHAUDS	HEISSGAZ VENTIL SPULE VENTILGEHAUSE
32	670006 01	DRIER	FILTRO DEUMIDIFICATORE	FILTRE DESHYDRATEUR	TROCKNER
33	784486 00	EVAPORATOR ASSY	ASSIEME EVAPORATORE	ENS. EVAPORATEUR	VERDAMPFER
34	784484 01 784484 03	ACCUMULATOR ASSY SDN 145 ACCUMULATOR ASSY SDN 215	ASSIEME ACCUMULAT. SDN 145 ASSIEME ACCUMULAT. SDN 215	ENS. ACCUMULATEUR SDN 145 ENS. ACCUMULATEUR SDN 215	SAMMLER/ SAUGLEIT. SDN 145 SAMMLER/ SAUGLEIT. SDN 215

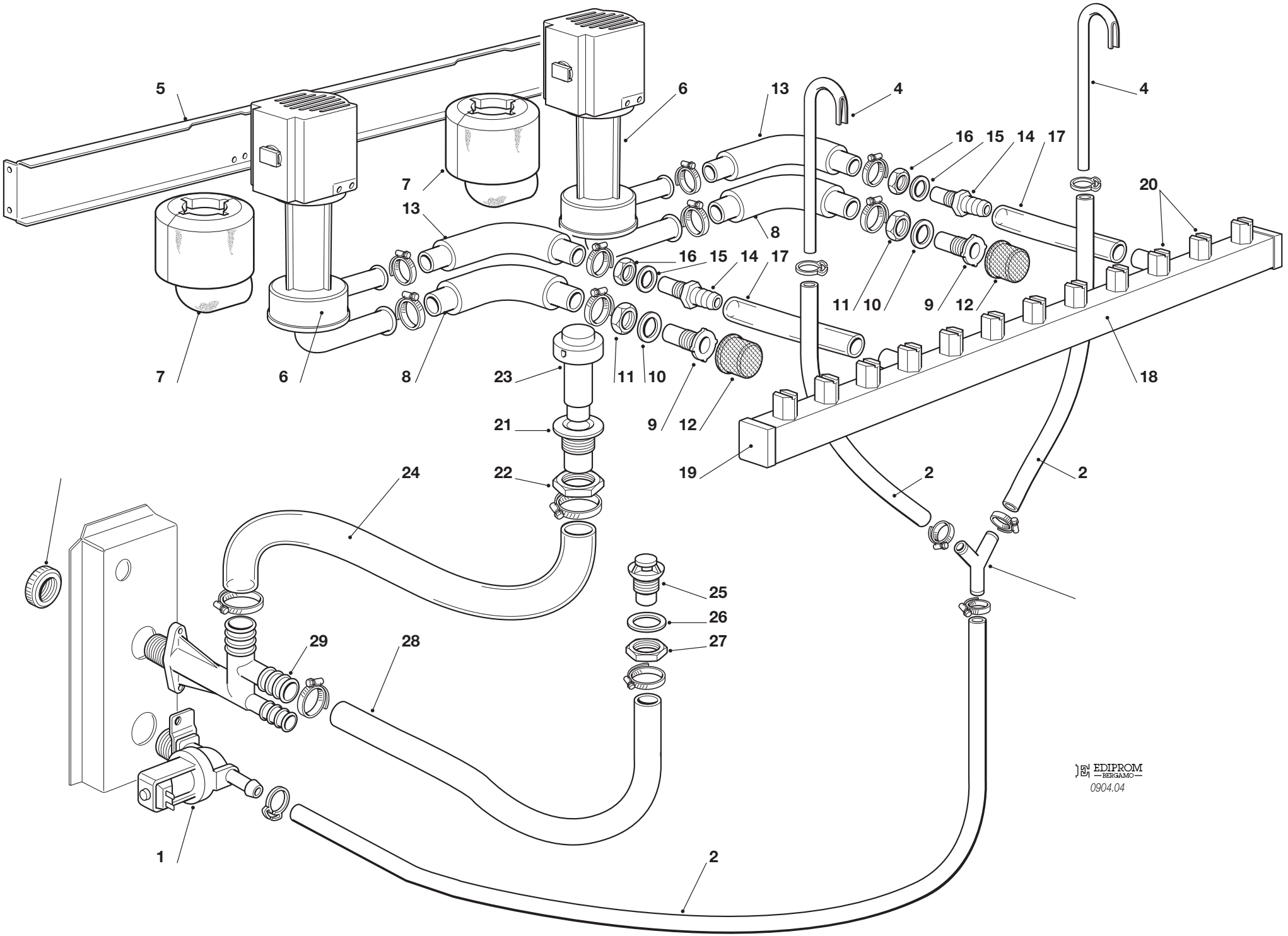
5
6
13
4
4
16
15
14
17
20
7
13
8
16
15
14
17
11
10
9
12
7
6
8
23
11
10
9
12
18
21
19
2
2
24
22
25
26
27
29
28
1
2
EDIPROM
BERGAMO
0904.04

SDN 145-215 - WATER SYSTEM - CIRCUITO IDRAULICO - CIRCUIT HYDRAULIQUE - WASSERSYSTEM

ITEM NO POS. NO REP. NO REF. NO	PART NO CODICE REFERENCE STUECK NR	DESCRIPTION	DESCRIZIONE	DESIGNATION	BESCHREIBUNG
1	650105 54	WATER INLET VALVE	ELETTROVALVOLA	ELECTROVANNE	ELEKTROMAGNETVENTIL
2	281900 01	PLASTIC TUBE - PER METER	TUBO INGRESSO ACQUA	TUYAU EN PLASTIQUE - POUR MT.	PLASTIK ROHR - PRO METER
4	734683 00R	WATER INLET COPPER PIPE	TUBO RAME INGR. ACQUA	TUYAU ENTREE EAU CUIVRE	WASSEREINLAUFROHR - CUPPER
5	703228 00	METAL BRACKET	SUPPORTO POMPA	SUPPORT METALLIQUE	METAL TRAEGER
6	620415 00	WATER PUMP	POMPA	POMPE A EAU	WASSER PUMPE
7	Z1ID043	PUMP COVER INSULATION	ISOLAMENTO POMPA	COUPELLE POUR POMPE	PUMPENISOLATION
8	610189 01	PUMP FEEDING PIPE	TUBO ASPIRAZIONE POMPA	TUYAU D'ASPIRATION POMPE	PUMPENANSAUGSCHLAUCH
9	Z1AC029	PUMP FEEDING PIPE-FIXING	RACCORDO ASPIRAZ. POMPA	RACCORD ASPIRATION POMPE	ANSAUGANSCHLUSSTUCK
10	Z1AC014	WASHER	RONDELLA	RONDELLE	UNTERLEGSCHEIBE
11	Z1AC017	NUT	DADO	ECROU	MUTTER TUERCA
12	Z1AC012	PUMP FEEDING FILTER	FILTRO ASPIRAZIONE POMPA	FILTRE ASPIRATION POMPE	PUMPENANSAUGFILTER
13	Z1ID006	PUMP INLET WATER PIPE	TUBO MANDATA POMPA	TUYAU DE REFOULEMENT	PUMPENABFLUSSCHLAUCH
14	Z1AC030	PUMP INLET WATER PIPE-FIXING	RACCORDO MANDATA POMPA	RACCORD REFOULEMENT POMPE	PUMPENABFLUSSANSCHLUSSTUCK
15	Z1AC013	WASHER	RONDELLA	RONDELLE	UNTERLEGSCHEIBE
16	Z1AC016	NUT	DADO	ECROU	MUTTER TUERCA
17	281830 04	SPRAY BAR FEEDING PIPE	TUBO ALIMENTAZIONE COLLETT.	TUYAU D'ALIMENTATION EAU	ANSCHLUSSCHLAUCH KOLLEKTOR
18	650665 11	SPRAY BAR	TUBO SPRUZZATORE	COLLECTEUR	KOLLEKTOR
19	660557 00	PLUG	UGELLO SPRUZZATORE	BOUCHON POUR COLLECTEUR	STOPFEN
20	660558 00	SPRAY JET	SPRUZZATORI	GICLEURS	SPRÜHDÜSEN
21	Z1AC057	OVERFLOW EXHAUST	RACCOR. SCARICO TROPPO PIENO	RACCORD E'COULEM. TROP-PLEIN	ÜBERLAUFROHR
22	Z1AC058	NUT	DADO	ECROU	MUTTER TUERCA
23	660601 00	OVERFLOW STAND PIPE	TUBO DI TROPPO PIENO	TROP PLEIN	UEBERLAUFROHR
24	Z1ID028	OVERFLOW DRAIN TUBE	TUBO SCARICO TROPPO PIENO	TUYAU VIDANGE TROP PLAIN	BEHÄLTER ABLAUF
25	Z1AC028	DRAIN FILTER	DRAIN FILTER	FILTRE CABINE STOCKAGE	BEHÄLTER ABLAUF FILTER
26	Z1AC013	WASHER	RONDELLA	RONDELLE	UNTERLEGSCHEIBE
27	Z1AC016	NUT	DADO	ECROU	MUTTER TUERCA
28	610189 00	STORAGE BIN DRAIN TUBE	TUBO SCARICO CONTENITORE	TUYAU VIDANGE CONTENEUR	BEHÄLTERAUSLAUFSCHLAUCH
29	Z1ID025	WATER DRAIN FITTING	RACCORDO SCARICO ACQUA	RACCORD EVACUATION EAU	WASSERABFLUSSANSCHLUSSE

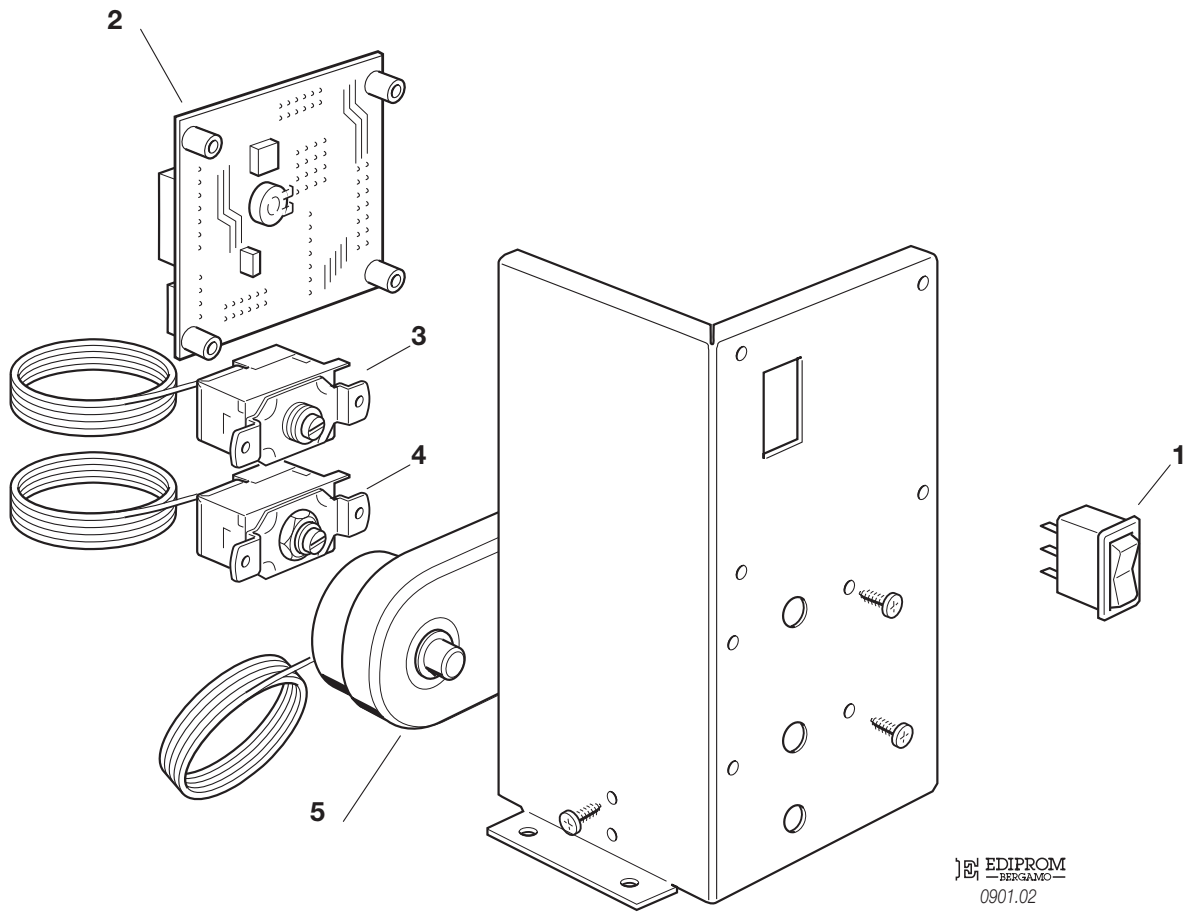

EDIPROM
BERGAMO
0901.02

SDN 145-215 - CONTROL BOX - SCATOLA DI CONTROLLO - BOITE ELECTRIQUE - SCHALTSCHRANK

ITEM NO POS NO REP. NO REF. NO	PART NO CODICE REFERENCE STUECK NR	DESCRIPTION	DESCRIZIONE	DESIGNATION	BESCHREIBUNG
1	620453 00	SWITCH	INTERRUTTORE LUMINOSO	INTERRUPTEUR LUMINEUX	SCHALTER
2	620507 01	TIMER	TIMER	MINUTERIE	TIMER
3	620201 01	EVAPORATOR THERMOSTAT	TERMOSTATO EVAPORATORE	THERMOSTAT EVAPORATEUR	VERDAMPFERTHERMOSTAT
4	630005 00	BIN THERMOSTAT	TERMOSTATO CONTENITORE	THERMOSTAT CONTENEUR	BEHÄLTER THERMOSTAT
5	620508 00	PRESSURE SAFETY	PRESSOSTATO DI SICUREZZA	PRESSOSTAT DE SECURITÉ	SICHERHEITS DRUCKWACTER

SDN 145 - COMPRESSOR CHART - TABELLA COMPRESSORI - TABLEAU COMPRESSEUR - KOMPRESSOR KARTE

MODEL MODELLO MODELE MODELL	VOLTS TENSIONE TENSION SPANNUNG	COMPRESSOR MODEL MOD. COMPRESSORE TYPE COMPRESSEUR KOMPRESSOR TYP	COMPRESSOR COMPRESSORE COMPRESSEUR KOMPRESSOR	RELAY RELE' RELAIS RELAIS	PROTECTOR PROTETTORE PROTECTEUR SCHUTZGERAT	START CAPACITOR CONDENS. DI SPUNTO CAPACITE'/DEMARRAGE START KONDENSATOR	RUN CAPACITOR CONDENS. DI MARCIA CAPACITE' PERMANENCE BETRIEB KONDENSATOR
SDN 145	115/60/1	-	-	-	-	-	
SDN 145	230/60/1	-	-	-	-	-	
SDN 145	230/50/1	CAJ9510Z	670099 04	620057 46	620058 78	620167 00	620167 21

SDN 145 - ELECTRIC COMPONENTS CHART - TABELLA COMPONENTI ELETTRICI
TABLEAU COMPOSANTS ELECTRIQUE - ELEKTRISCHEKARTE

MODEL MODELLO MODELE MODELL	VOLTS TENSIONE TENSION SPANNUNG	WATER PUMP POMPA POMPE A EAU WASSER PUMPE	FAN MOTOR ONLY MOTORE VENTILATORE MOTEUR VENTILATEUR LUFTER MOTOR	WATER INLET VALVE VALV. INGR. ACQUA V.E.M. ARRIVEE' EAU WASSEREIN. VENTIL	HOT GAS VALVE VALVOLA GAS CALDO V.E.M. GAZ CHAUDS HEISSGAZ VENTIL	TIMER TIMER MINUTERIE TIMER	CONTACTOR CONTATTORE CONTACTEUR SCHALTSCHUTZ
SDN 145	115/60/1	-	-	-	-	-	-
SDN 145	230/60/1	-	-	-	-	-	-
SDN 145	230/50/1	620415 00	620419 04	650105 54 (AIR / WATER)	620306 48 -COIL- 620306 46 -BODY-	620507 01	-

SDN 215 - COMPRESSOR CHART - TABELLA COMPRESSORI - TABLEAU COMPRESSEUR - KOMPRESSOR KARTE

MODEL MODELLO MODELE MODELL	VOLTS TENSIONE TENSION SPANNUNG	COMPRESSOR MODEL MOD. COMPRESSORE TYPE COMPRESSEUR KOMPRESSOR TYP	COMPRESSOR COMPRESSORE COMPRESSEUR KOMPRESSOR	RELAY RELE' RELAIS RELAIS	PROTECTOR PROTETTORE PROTECTEUR SCHUTZGERAT	START CAPACITOR CONDENS. DI SPUNTO CAPACITE'/DEMARRAGE START KONDENSATOR	RUN CAPACITOR CONDENS. DI MARCIA CAPACITE' PERMANENCE BETRIEB KONDENSATOR
SDN 215	115/60/1	-	-	-	-	-	
SDN 215	230/60/1	-	-	-	-	-	
SDN 215	230/50/1	CAJ4519Z	670099 05	620057 47	620058 57	620167 00	620167 24

SDN 215 - ELECTRIC COMPONENTS CHART - TABELLA COMPONENTI ELETTRICI
TABLEAU COMPOSANTS ELECTRIQUE - ELEKTRISCHEKARTE

MODEL MODELLO MODELE MODELL	VOLTS TENSIONE TENSION SPANNUNG	WATER PUMP POMPA POMPE A EAU WASSER PUMPE	FAN MOTOR ONLY MOTORE VENTILATORE MOTEUR VENTILATEUR LUFTER MOTOR	WATER INLET VALVE VALV. INGR. ACQUA V.E.M. ARRIVEE' EAU WASSEREIN. VENTIL	HOT GAS VALVE VALVOLA GAS CALDO V.E.M. GAZ CHAUDS HEISSGAZ VENTIL	TIMER TIMER MINUTERIE TIMER	CONTACTOR CONTATTORE CONTACTEUR SCHALTSCHUTZ
SDN 215	115/60/1	-	-	-	-	-	-
SDN 215	230/60/1	-	-	-	-	-	-
SDN 215	230/50/1	620415 00	620419 04	650105 54 (AIR / WATER)	620306 48 -COIL- 620306 46 - BODY-	620507 01	-

SIMAG
ICE MACHINES

www.simag.it

SIMAG
via Risorgimento, 4
20017 Mazzo di Rho (MI) - Italy
Tel. +39 02 93900215 (Commerciale - Sales Dept.)
Tel. +39 02 93960357 (Assistenza - Service Dept.)
Fax +39 02 93900226 (Commerciale - Sales Dept.)
Fax +39 02 93960366 (Assistenza - Service Dept.)
e-mail: sales@simag.it
e-mail: service@simag.it

Singapore Office
SIMAG FAR EAST
627A Aljunied Road
04-04 Biztech Centre
Singapore 389842
Tel. ++65 6738 5393
Fax ++65 6738 1959
e-mail: scotsice@singnet.com.sg

Certified ISO 9001
TOTAL QUALITY