DESPIECE TECNICO

Lavavajillas de arrastre modular
Lave-vaisselle d' avancement modulaire
Rack modular conveyor dishwasher
Modular korbtransport geschirrspüler
Lavastoviglie a trascinamento modulari
Lava-louças de arrratre molular

Modelos:

FI-280
FI-370
FI-460
FI-550
ECO-280
ECO-370
ECO-460
ECO-550

Octubre 2008 October

Revisado Enero 2014 January Revised

FAGOR

FAGOR INDUSTRIAL

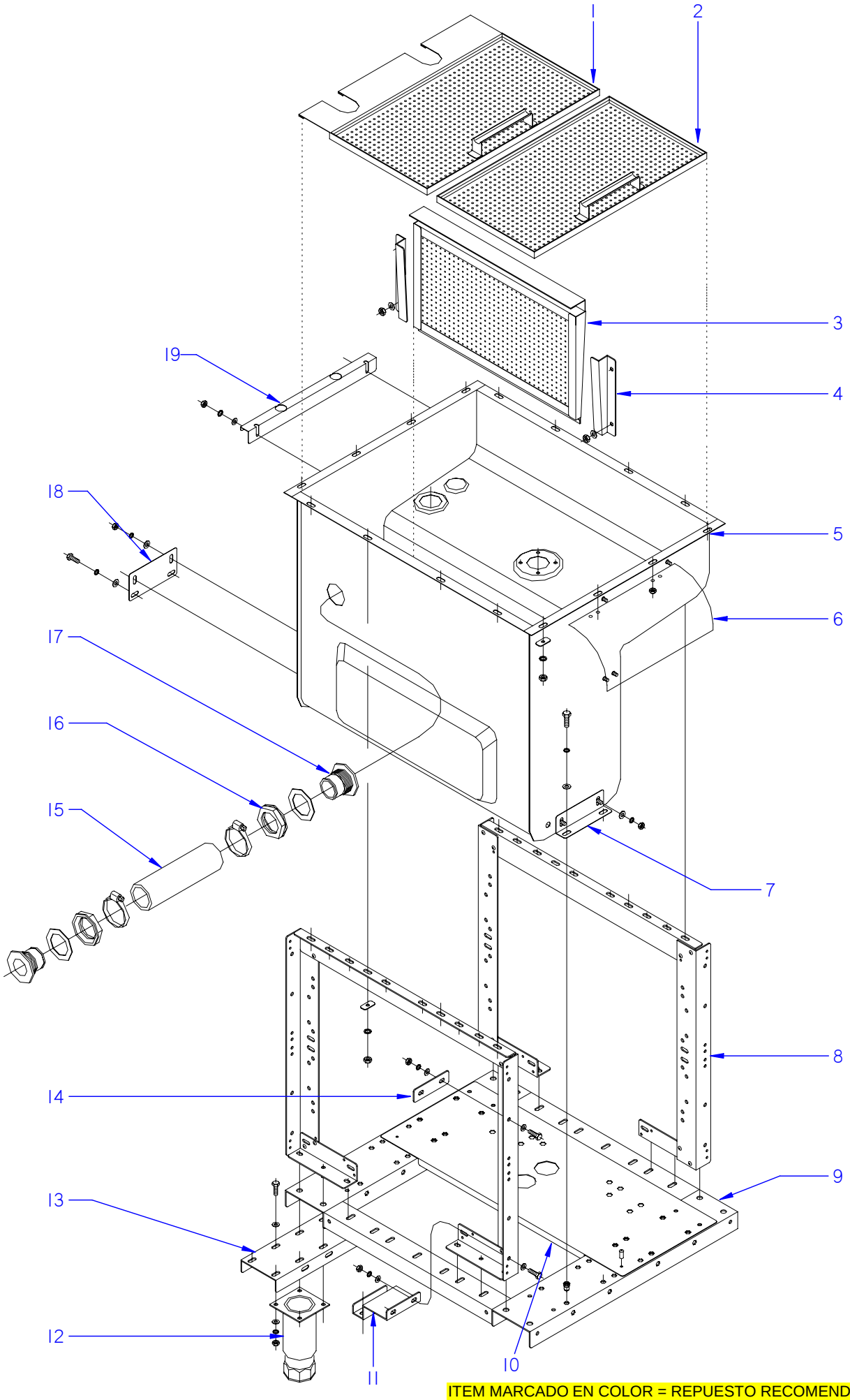

ITEM MARCADO EN COLOR = REPUESTO RECOMENDADO
COLOURED ITEM = RECOMMENDED SPARE PART

N plano	Firma	Fecha	Aparato	Lamina	
C-2140		2008-11	ARMAZON Y CUBA DE PRELAVADO LAVAVAJILLAS MODULARES	1	Fagor Industrial S.Coop. FAGOR Oñate

MOD.	LAVAVAJILLAS MODULARES MODULAR DISHWASHERS	ZONA	ARMAZON Y CUBA DE PRELAVADO PRERINSE TUB AND FRAME	PLANO	C-2140

ITEM	CODIGO	DENOMINACION	TEXTO	FI-370 I ECO-370 I	FI-370 D ECO-370 D	FI-550 I ECO-550 I	FI-550 D ECO-550 D				NOTAS
1	Z330821000	BANDEJA PRELAV. POSTER. IZDA	PREWASH TRAY REAR LEFT	1	_	1	_				
1	Z330823000	BANDEJA PRELAV. POSTER. DCHO	PREWASH TRAY REAR RIGHT	_	1	_	1				
2	Z330803000	BANDEJA PRELAVADO COMPLETA	COMPLETE PREWASH TRAY	1	1	1	1				
3	Z710907000	FILTRO COMPLETO	COMPLETE FILTER	1	1	1	1				ELIMINADO 18.02.2013
3	12048626	FILTRO	FILTER	1	1	1	1				INTRODUCIDO 18.02.2013
4	Z710309000	GUIA FILTRO ANTERIOR	FRONT FILTER GUIDE	1	1	1	1				
S/Nº	Z710310000	GUIA FILTRO POSTERIOR	REAR FILTER GUIDE	1	1	1	1				
	Q162040000	TUERCA EXAGONAL M6	HEXAGONAL NUT M6	4	4	4	4				
5	Z330420000	CUBA PRELAVADO SOLDADA	PREWASH TUB WELDED	1	1	1	1				
	Z310341000	ARANDELA RECTANGULAR	RECTANGULAR WASHER	16	16	16	16				
	Q262040000	ARANDELA GROW. A6 A.304	WASHER GROW. A6 A.304	16	16	16	16				
	Q162040000	TUERCA EXAGONAL M6	HEXAGONAL NUT M6	16	16	16	16				
6	Z313041000	CUBIERTA COMPONENTES	COMPONENT COVER	1	1	1	1				
7	Z270324000	AMARRE CUBA ANTERIOR	FRONT TUB FASTENING	1	1	1	1				
8	Z310104000	SOPOR. CUBA LAVADO MONTADO	WASH TUB SUPPORT MOUNTED	2	2	2	2				
	Q012043000	TORNILLO EXAGONAL M6X20	HEXAGONAL BOLT M6x20	11	11	11	11				
	Q012043000	TORNILLO EXAGONAL M6X20	HEXAGONAL BOLT M6x20	24	24	24	24				
	Q302022000	ARANDELA 16X6X1.2 A.304	WASHER 16X6X1.2 A.304	70	70	70	70				
	Q162040000	TUERCA EXAGONAL M6	HEXAGONAL NUT M6	35	35	35	35				
	Q262040000	ARANDELA GROW. A6 A.304	WASHER GROW. A6 A.304	35	35	35	35				
9	Z330101000	ARMAZON PRELAVADO SOLDADO	PREWASH FRAME WELDED	1	1	1	1				
10	Z330111000	PANEL TRANSVERSAL PRELAVAD.	PREWASH TRANSVERSAL PANE	1	1	1	1				
	Q411304000	REMACHE AVIBULB Ø4,8	AVIBULB RIVET Ø4.8	2	2	2	2				
11	Z330104000	REFUERZO ARMAZON	FRAME REINFORCEMENT	2	2	2	2				
12	X260151000	PATA REGULABLE	ADJUSTABLE LEG	4	4	4	4				
13	Z330103000	SOPORTE PATA	LEG SUPPORT	2	2	2	2				
14	Z330105000	EMPALME ARMAZON	FRAME CONNECTION	2	2	2	2				
15	Z330906000	MANGUERA COMUNICACION	COMMUNICATION HOSE	1	1	1	1				
	Q881324000	ABRAZADERA 50-70L	CLAMP 50-70L	2	2	2	2				
16	Z702101000	TUERCA R.11/2 DELRIN	R.11/2 DELRIN NUT	2	2	2	2				
	Q307009000	ARANDELA 70X48X1.5	WASHER 70X48X1.5	2	2	2	2				

MOD.	LAVAVAJILLAS MODULARES MODULAR DISHWASHERS	ZONA	ARMAZON Y CUBA DE PRELAVADO PRERINSE TUB AND FRAME	PLANO	C-2140

ITEM	CODIGO	DENOMINACION	TEXTO	FI-370 I ECO-370 I	FI-370 D ECO-370 D	FI-550 I ECO-550 I	FI-550 D ECO-550 D				NOTAS
17	Z330901000	PASAMUROS COMUNICACION	COMMUNICATION BUSHING	2	2	2	2				
18	Z270325000	AMARRE CUBA POSTERIOR	REAR TUB FASTENING	1	1	1	1				
	Q302022000	ARANDELA 16X6X1.2 A.304	WASHER 16X6X1.2 A.304	8	8	8	8				
	Q262040000	ARANDELA GROW. A6 A.304	WASHER GROW. A6 A.304	8	8	8	8				
	Q162040000	TUERCA EXAGONAL M6	HEXAGONAL NUT M6	8	8	8	8				
	Q012042000	TORNILLO EXAGONAL M6X15	HEXAGONAL BOLT M6x15	4	4	4	4				
19	Z332906000	SOPORTE PANEL PRELAVADO	PREWASH PANEL SUPPORT	1	1	1	1				
	Q232050000	ARANDELA A6	WASHER A6	2	2	2	2				
	Q262040000	ARANDELA GROW. A6 A.304	WASHER GROW. A6 A.304	2	2	2	2				
	Q162040000	TUERCA EXAGONAL M6	HEXAGONAL NUT M6	2	2	2	2				
	Q152004000	TORNILLO APLASTADO M5x13 A304	FLAT HEADED BOLT M5x13 A304	4	4	4	4				
	Q232040000	ARANDELA A6	WASHER A6	4	4	4	4				

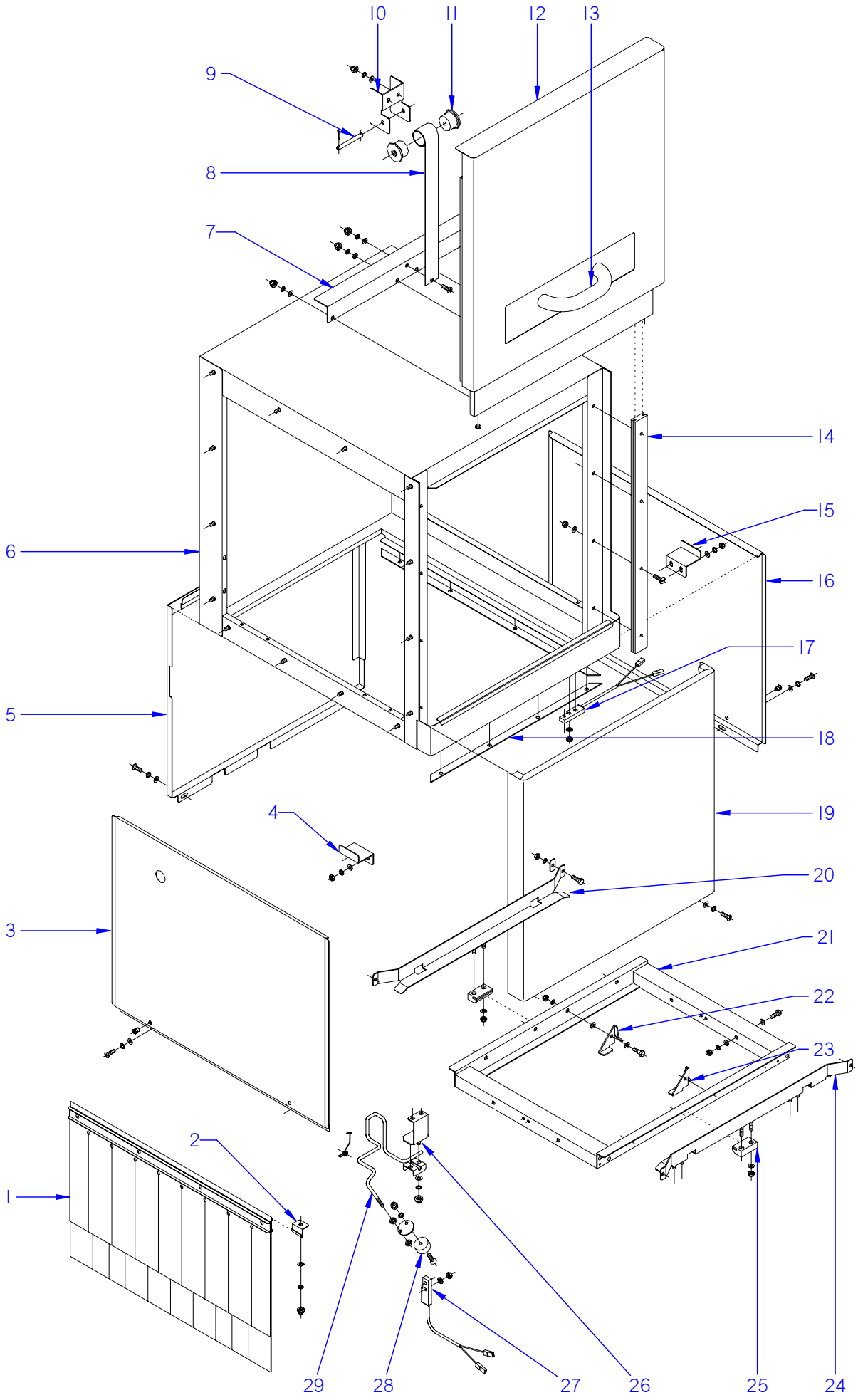

ITEM MARCADO EN COLOR = REPUESTO RECOMENDADO
COLOURED ITEM = RECOMMENDED SPARE PART

N plano	Firma	Fecha	Aparato		Lamina	
C-2141		2008-11	TUNEL DE PRELAVADO LAVAVAJILLAS MODULARES		2	Fagor Industrial S.Coop. Oñate

MOD.	LAVAVAJILLAS MODULARES MODULAR DISHWASHERS	ZONA	TUNEL DE PRELAVADO / PREWASH TUNNEL	PLANO	C-2141

ITEM	CODIGO	DENOMINACION	TEXTO	FI-370 I ECO-370 I	FI-370 D ECO-370 D	FI-550 I ECO-550 I	FI-550 D ECO-550 D				NOTAS
1	Z276429000	CORTINA INTERIOR COMPLETA	COMPLETE INTERIOR CURTAIN	2	2	2	2				
S/Nº	Z276419000	CORTINA EXTERIOR COMPLETA	COMPLETE EXTERIOR CURTAIN	1	1	1	1				
2	Z270326000	SUJECION CORTINA	CURTAIN FASTENING	4	4	4	4				
	Q232040000	ARANDELA A6	WASHER A6	4	4	4	4				
	Q262030000	ARANDELA GROW. A5 A.304	WASHER GROW. A5 A.304	4	4	4	4				
	Q212031000	TUERCA SOMBRERETE M5	COWL NUT M5	4	4	4	4				
3	Z312903000	PANEL LATERAL	SIDE PANEL	1	_	1	_				
4	Z312917000	APOYO PANEL DCHO.	RIGHT PANEL SUPPORT	1	_	1	_				
5	Z332921000	PANEL POSTE. PRELAVADO IZDO	REAR LEFT PREWASH PANEL	1	_	1	_				
5	Z332903000	PANEL POSTE. PRELAVADO DCHO	REAR RIGHT PREWASH PANEL	_	1	_	1				
6	Z330400000	CAJA PRELAVADO SOLDADA	WELDED PREWASH BOX	1	1	1	1				
7	Z310528000	AMARRE RESORTE PRELAVADO	PREWASH SPRING FASTENING	1	1	1	1				ELIMINADO 10.02.09
7	Z270517000	AMARRE RESORTE	SPRING FASTENING	1	1	1	1				INTRODUCIDO 10.02.09
	Q152004000	TORNILLO APLASTADO M5x13 A304	FLAT HEADED BOLT M5x13 A304	2	2	2	2				
8	Z270513000	RESORTE FUERZA CONSTANTE	CONSTANT FORCE SPRING	1	1	1	1				
9	Z270514000	EJE RESORTE	SPRING SHAFT	1	1	1	1				
	Q352001000	PASADOR DE ALETAS 2X20	COTTER PIN 2X20	2	2	2	2				
10	Z270511000	SOPORTE RESORTE	SPRING SUPPORT	1	1	1	1				
	Q232040000	ARANDELA A6	WASHER A6	2	2	2	2				
	Q212031000	TUERCA SOMBRERETE M5	COWL NUT M5	2	2	2	2				
11	Z270512000	ENCAJE RESORTE	SPRING SOCKET	2	2	2	2				
12	Z310521000	PUERTA PREACLARADO MONTAD.	PRERINSE DOOR MOUNTED	1	1	1	1				
	Z270516000	TOPE	STOP	2	2	2	2				
	Z270531000	SUJECION PUERTA	DOOR FASTENING	1	1	1	1				ELIMINADO 10.02.09
S/Nº	Z510556000	SOPORTE ENGANCHE PUERTA	SUPPORT DOOR LATCH	1	1	1	1				INTRODUCIDO 10.02.09
S/Nº	Z510550000	ENGANCHE PUERTA COMPLETO	FULL DOOR HOOK	1	1	1	1				ELIMINADO 25.10.13
S/Nº	12096567	ENGANCHE PUERTA COMPLETO	FULL DOOR HOOK	1	1	1	1				INTRODUCIDO 25.10.13
13	Z400540000	ASA PUERTA COMPLETA	COMPLETE DOOR HANDLE	1	1	1	1				
14	Z270336000	GUIA PUERTA	DOOR GUIDE	2	2	2	2				
	Q152045000	TORNILLO AMARRE M6X25	FASTENING BOLT M6X25	8	8	8	8				
	Q222012000	TUERCA AUTOBLOCANTE M6	SELF-LOCKING NUT M6	8	8	8	8				

MOD.	LAVAVAJILLAS MODULARES MODULAR DISHWASHERS	ZONA	TUNEL DE PRELAVADO / PREWASH TUNNEL	PLANO	C-2141

ITEM	CODIGO	DENOMINACION	TEXTO	FI-370 I ECO-370 I	FI-370 D ECO-370 D	FI-550 I ECO-550 I	FI-550 D ECO-550 D				NOTAS
15	Z312917000	APOYO PANEL DCHO.	RIGHT PANEL SUPPORT	_	1	_	1				
	Q262040000	ARANDELA GROW. A6 A.304	WASHER GROW. A6 A.304	_	4	_	4				
	Q162040000	TUERCA EXAGONAL M6	HEXAGONAL NUT M6	_	4	_	4				
16	Z312903000	PANEL LATERAL	SIDE PANEL	_	1	_	1				
17	Z100522000	INTERRUPTOR MAGNETICO AC	MAGNETIC SWITCH AC	1	1	1	1				
	Q242020000	ARANDELA ABANICO A4 A.304	FAN WASHER A4 A.304	1	1	1	1				
	Q162020000	TUERCA EXAGONAL M4	HEXAGONAL NUT M4	1	1	1	1				
18	Z330431000	PERFIL LONGITUDINAL PRELAVAD.	LONGITUDINAL PREWASH PROF	2	2	2	2				
S/Nº	Z330432000	PERFIL TRANSVERSAL PRELAVAD.	TRANSVERSAL PREWASH PROF	2	2	2	2				
19	Z332901000	PANEL FRONTAL PRELAVADO	FRONT PREWASH PANEL	1	1	1	1				
20	Z315029000	GUIA PRELAVADO POSTERIOR	REAR PREWASH GUIDE	1	1	1	1				
	Z310341000	ARANDELA RECTANGULAR	RECTANGULAR WASHER	2	2	2	2				
	Q162040000	TUERCA EXAGONAL M6	HEXAGONAL NUT M6	2	2	2	2				
	Q232040000	ARANDELA A6	WASHER A6	2	2	2	2				
	Q012042000	TORNILLO EXAGONAL M6X15	HEXAGONAL BOLT M6x15	2	2	2	2				
21	Z335011000	SOPORTE UÑA PRELAVADO COM.	COM. PREWASH CLAW SUPPOR	2	2	2	2				
22	Z275077000	UÑA ARRASTRE IZQUIERDA LASER	LASER LEFT DRAG CLAW	4	4	4	4				
23	Z275078000	UÑA ARRASTRE DERECHA LASER	LASER RIGHT DRAG CLAW	4	4	4	4				
	Q232050000	ARANDELA A8	WASHER A8	16	16	16	16				
	Q152046000	TORNILLO EXAGON. CON CUELLO	HEXAGONAL BOLT. WITH NECK	8	8	8	8				
24	Z335025000	GUIA PRELAVADO ANTERI. IZDO	FRONT LEFT PREWASH GUIDE	1	_	1	_				
24	Z335005000	GUIA PRELAVADO ANTERI. DCHO	FRONT RIGHT PREWASH GUIDE	_	1	_	1				
25	Z275075000	DESLIZAMIENTO GUIAS	GUIDE SLIDE	4	4	4	4				
	Q232040000	ARANDELA A6	WASHER A6	8	8	8	8				
	Q222012000	TUERCA AUTOBLOCANTE M6	SELF-LOCKING NUT M6	8	8	8	8				
26	Z271211000	U SOPORTE PULSADOR	BUTTON U-SUPPORT	1	1	1	1				
	Q232040000	ARANDELA A6	WASHER A6	2	2	2	2				
	Q262030000	ARANDELA GROW. A5 A.304	WASHER GROW. A5 A.304	2	2	2	2				
	Q212031000	TUERCA SOMBRERETE M5	COWL NUT M5	2	2	2	2				

MOD.	LAVAVAJILLAS MODULARES MODULAR DISHWASHERS	ZONA	TUNEL DE PRELAVADO / PREWASH TUNNEL	PLANO	C-2141

ITEM	CODIGO	DENOMINACION	TEXTO	FI-370 I ECO-370 I	FI-370 D ECO-370 D	FI-550 I ECO-550 I	FI-550 D ECO-550 D				NOTAS
27	Z100522000	INTERRUPTOR MAGNETICO AC	MAGNETIC SWITCH AC	1	1	1	1				
	Q242020000	ARANDELA ABANICO A4 A.304	FAN WASHER A4 A.304	2	2	2	2				
	Q162020000	TUERCA EXAGONAL M4	HEXAGONAL NUT M4	2	2	2	2				
28	Z271207000	IMAN	MAGNET	1	1	1	1				
	Z271206000	SOPORTE IMAN	MAGNET BRACKET	1	1	1	1				
	Q072033000	TORN.G.S. M5X20 A304	BOLT G.S. M5X20 A304	1	1	1	1				
	Q212031000	TUERCA SOMBRERETE M5	COWL NUT M5	1	1	1	1				
	Q232030000	ARANDELA A5	WASHER A5	1	1	1	1				
	Q162040000	TUERCA EXAGONAL M6	HEXAGONAL NUT M6	2	2	2	2				
29	Z311253000	PULSADOR T.E. IZQUIERDO	T.E. BUTTON LEFT	1	_	1	_				
29	Z311256000	PULSADOR T.E. DERECHO	T.E. BUTTON RIGHT	_	1	_	1				
S/Nº	Z271201000	SOPORTE PULSADOR	BUTTON SUPPORT	1	1	1	1				
	Q232040000	ARANDELA A6	WASHER A6	2	2	2	2				
	Q262030000	ARANDELA GROW. A5 A.304	WASHER GROW. A5 A.304	2	2	2	2				
	Q212031000	TUERCA SOMBRERETE M5	COWL NUT M5	2	2	2	2				
	Z271203000	MUELLE TORSION IZDO 27601	LEFT TORSION SPRING 27601	1	_	1	_				
	Z271204000	MUELLE TORSION DCHO 27561	RIGHT TORS.ION SPRING 27561	_	1	_	1				

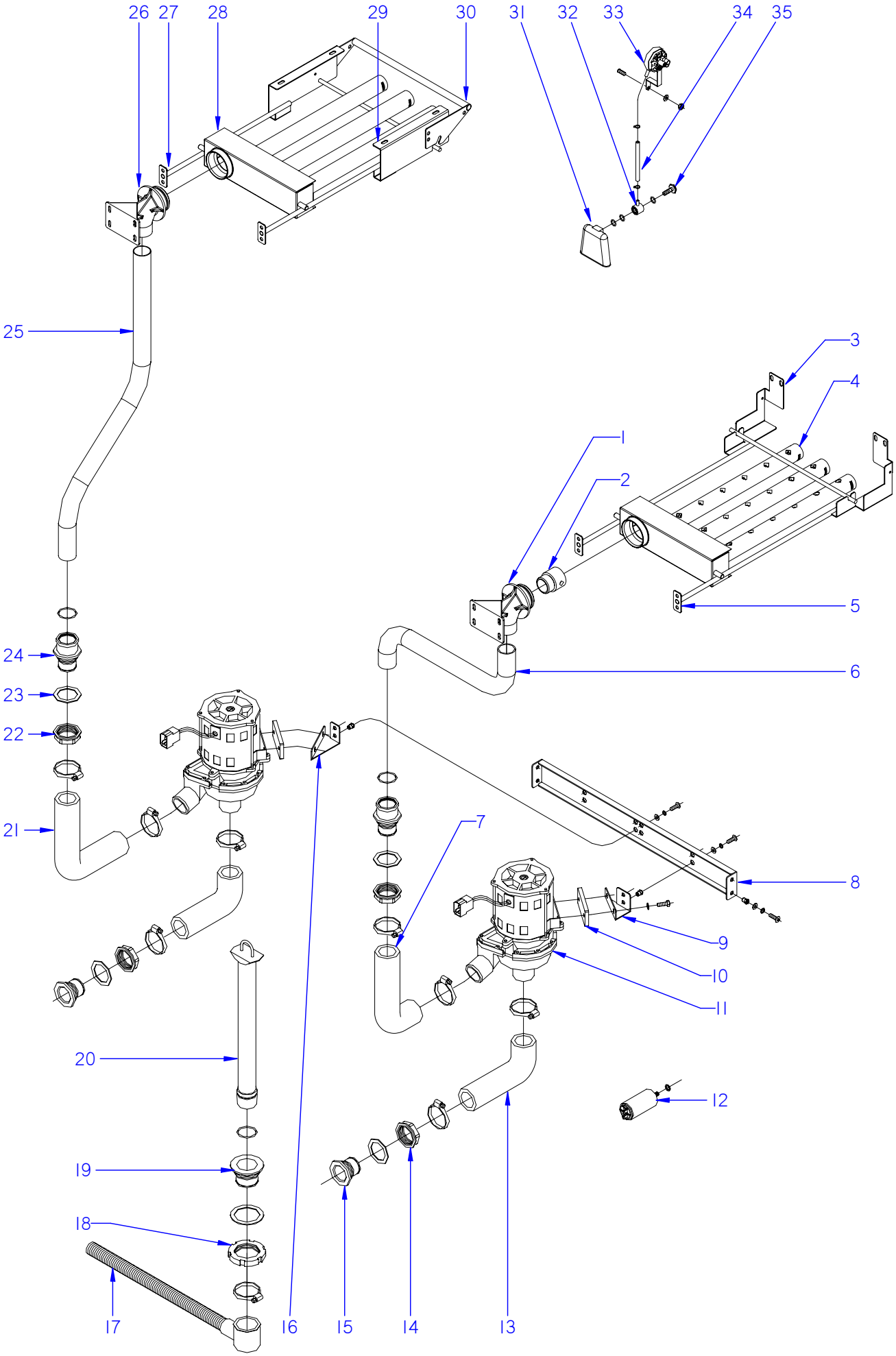

ITEM MARCADO EN COLOR = REPUESTO RECOMENDADO
COLOURED ITEM = RECOMMENDED SPARE PART

N plano	Firma	Fecha	Aparato		Lamina	
C-2142		2008-11	PARTE FUNCIONAL PRELAVADO LAVAVAJILLAS MODULARES		3	Fagor Industrial S.Coop. Oñate

MOD.	LAVAVAJILLAS MODULARES MODULAR DISHWASHERS	ZONA	PARTE FUNCIONAL DE PRELAVADO FUNCTIONAL PART OF PREWASH	PLANO	C-2142

ITEM	CODIGO	DENOMINACION	TEXTO	FI-370 I ECO-370 I	FI-370 D ECO-370 D	FI-550 I ECO-550 I	FI-550 D ECO-550 D				NOTAS
1	Z330789000	PASAMUROS SUPER. PRELAVADO	PREWASH UPPER BUSHING.	1	1	1	1				
	Q307065000	JUNTA TORICA Ø43,01X37,77X2.62	O-RING Ø43.01X37.77X2.62	1	1	1	1				
	Q307057000	JUNTA TORICA Ø47.22x54.28x3.53	O-RING Ø47.22x54.28x3.53	1	1	1	1				
	Q262040000	ARANDELA GROW. A6 A.304	WASHER GROW. A6 A.304	4	4	4	4				
	Q232040000	ARANDELA A6	WASHER A6	4	4	4	4				
	Q162040000	TUERCA EXAGONAL M6	HEXAGONAL NUT M6	4	4	4	4				
2	Z330787000	REDUCCION PRELAVADO	PREWASH REDUCTION	1	1	1	1				
3	Z370711000	SOPORTE INFERIOR DERECHO	RIGHT LOWER SUPPORT	1	1	1	1				
	Q262040000	ARANDELA GROW. A6 A.304	WASHER GROW. A6 A.304	4	4	4	4				
	Q232040000	ARANDELA A6	WASHER A6	4	4	4	4				
	Q162040000	TUERCA EXAGONAL M6	HEXAGONAL NUT M6	4	4	4	4				
4	Z370735000	DISTRIBUIDOR PRELAVADO DCHO.	RIGHT PREWASH DISTRIBUTOR	1	1	1	1				
	Z310721000	TAPON CIERRE	CLOSING PLUG	3	3	3	3				
	Q307068000	JUNTA TORICA Ø33X27X3	O-RING Ø33X27X3	3	3	3	3				
5	Z370715000	SOPORTE INFERIOR IZQUIERDO	LEFT LOWER SUPPORT	1	1	1	1				
	Q262040000	ARANDELA GROW. A6 A.304	WASHER GROW. A6 A.304	4	4	4	4				
	Q232040000	ARANDELA A6	WASHER A6	4	4	4	4				
	Q162040000	TUERCA EXAGONAL M6	HEXAGONAL NUT M6	4	4	4	4				
6	Z330763000	CONDUC. INF. IZDA. PRELAVADO	PREWASH LEFT LOW. PIPE	1	_	1	_				
6	Z330774000	CONDUC. INF. DCHA. PRELAVADO	PREWASH RIGHT LOW. PIPE	_	1	_	1				
7	Z710905000	CONDUCTO IMPULSION ANTER.	FRONT IMPULSE PIPE	1	1	1	1				
	Q881307000	ABRAZADERA 40-60	CLAMP 40-60	2	2	2	2				
8	Z331001000	SUJEC. MOTOBOMBA PRELAVADO	PREWASH MOTORPUMP FAST.	1	1	1	1				
	Q221342000	REMACHE EXAGONAL M5	HEXAGONAL RIVET M5	8	8	8	8				
9	Z331002000	SOP. MOTOBOMBA ANTER. PREL.	SUPPORT PREWASH FRONT MO	1	1	1	1				
10	Z201003000	BASE BOMBA LAVADO 1003016	WASH PUMP BASE 1003016	2	2	2	2				
	Q232040000	ARANDELA A6	WASHER A6	4	4	4	4				
	Q012042000	TORNILLO EXAGONAL M6X15	HEXAGONAL BOLT M6x15	4	4	4	4				
11	Z201011000	BOMBA DE LAVADO	WASH PUMP	2	2	2	2				
11	Z203511000	BOMBA DE LAVADO 60 Hz.	WASH PUMP 60 Hz.	2	2	2	2				

MOD.	LAVAVAJILLAS MODULARES MODULAR DISHWASHERS	ZONA	PARTE FUNCIONAL DE PRELAVADO FUNCTIONAL PART OF PREWASH	PLANO	C-2142

ITEM	CODIGO	DENOMINACION	TEXTO	FI-370 I ECO-370 I	FI-370 D ECO-370 D	FI-550 I ECO-550 I	FI-550 D ECO-550 D				NOTAS
12	V321300000	CONDENSADOR 10 M.F.	CONDENSER 10 M.F.	2	2	2	2				
	Q162050000	TUERCA EXAGONAL M8x1 INOX.	HEXAGONAL NUT M8x1 INOX.	2	2	2	2				
13	Z710904000	CONDUCTO ASPIRACION	EXTRACTOR PIPE	2	2	2	2				
	Q881307000	ABRAZADERA 40-60	CLAMP 40-60	2	2	2	2				
14	Z710708000	TUERCA PASAMUROS	WALL BUSHING NUT	2	2	2	2				
15	Z710903000	PASAMUROS ASPIRACION	EXTRACTOR BUSHING	2	2	2	2				
	Q307058000	ARANDELA Ø60x44X2	WASHER Ø60x44X2	2	2	2	2				
16	Z331003000	SOP. MOTOBOMBA POSTE. PRELA.	SUPPORT PREWASH REAR MOT	1	1	1	1				
	Q302022000	ARANDELA 16X6X1.2 A.304	WASHER 16X6X1.2 A.304	8	8	8	8				
	Q262030000	ARANDELA GROW. A5 A.304	WASHER GROW. A5 A.304	8	8	8	8				
	Q012032000	TORNILLO EXAGONAL M5X15	HEXAGONAL BOLT M5x15	8	8	8	8				
17	Z200910000	MANGUERA DESAGUE	DRAINAGE HOSE	1	1	1	1				
	Q881307000	ABRAZADERA 40-60	CLAMP 40-60	1	1	1	1				
18	Q220001000	TUERCA RANURADA M56X2,5 HOS	GROOVED NUT M56X2.5 HOS	1	1	1	1				
19	Z710902000	PASAMUROS DESAGUE	DRAINAGE BUSHING	1	1	1	1				
	Q307059000	JUNTA Ø72x56x2	JOINT Ø72x56x2	1	1	1	1				
20	Z330921000	ALIVIADERO	OVERFLOW	1	1	1	1				
	Q307051000	JUNTA TORICA Ø36.17X41.41X2.6	O-RING Ø36.17X41.41X2.6	1	1	1	1				
21	Z710906000	CONDUCTO IMPULSION POSTER.	REAR IMPULSE PIPE	1	1	1	1				
	Q881307000	ABRAZADERA 40-60	CLAMP 40-60	2	2	2	2				
22	Z710708000	TUERCA PASAMUROS	WALL BUSHING NUT	2	2	2	2				
	Q307065000	JUNTA TORICA Ø43,01X37,77X2.62	O-RING Ø43.01X37.77X2.62	2	2	2	2				
23	Q307058000	ARANDELA Ø60x44X2	WASHER Ø60x44X2	2	2	2	2				
24	Z330751000	PASAMUROS IMPULSION PRELAV.	PREWASH IMPULSE BUSHING	2	2	2	2				ELIMINADO 31.03.09
24	Z330790000	PASAMUROS IMPULSION PRELAV.	PREWASH IMPULSE BUSHING	2	2	2	2				INTRODUCIDO 31.03.09
25	Z330765000	CONDUC. SUP. IZDA PRELAVADO	PREWASH LEFT UPPER PIPE	1	_	1	_				
25	Z330776000	CONDUC. SUP. DCHA PRELAVADO	PREWASH RIGHT UPPER PIPE	_	1	_	1				

MOD.	LAVAVAJILLAS MODULARES MODULAR DISHWASHERS	ZONA	PARTE FUNCIONAL DE PRELAVADO FUNCTIONAL PART OF PREWASH	PLANO	C-2142

ITEM	CODIGO	DENOMINACION	TEXTO	FI-370 I ECO-370 I	FI-370 D ECO-370 D	FI-550 I ECO-550 I	FI-550 D ECO-550 D				NOTAS
26	Z330789000	PASAMUROS SUPER. PRELAVADO	PREWASH UPPER BUSHING.	1	1	1	1				
	Q307065000	JUNTA TORICA Ø43,01X37,77X2.62	O-RING Ø43.01X37.77X2.62	1	1	1	1				
	Q307057000	JUNTA TORICA Ø47.22x54.28x3.53	O-RING Ø47.22x54.28x3.53	1	1	1	1				
	Q262040000	ARANDELA GROW. A6 A.304	WASHER GROW. A6 A.304	4	4	4	4				
	Q232040000	ARANDELA A6	WASHER A6	4	4	4	4				
	Q162040000	TUERCA EXAGONAL M6	HEXAGONAL NUT M6	4	4	4	4				
27	Z370701000	SOPORTE SUPERIOR DERECHO	RIGHT UPPER SUPPORT	1	1	1	1				
	Q262040000	ARANDELA GROW. A6 A.304	WASHER GROW. A6 A.304	4	4	4	4				
	Q232040000	ARANDELA A6	WASHER A6	4	4	4	4				
	Q162040000	TUERCA EXAGONAL M6	HEXAGONAL NUT M6	4	4	4	4				
28	Z370737000	DISTRIBUIDOR PRELAVADO IZDO.	LEFT PREWASH DISTRIBUTOR	1	1	1	1				
	Z310721000	TAPON CIERRE	CLOSING PLUG	3	3	3	3				
	Q307068000	JUNTA TORICA Ø33X27X3	O-RING Ø33X27X3	3	3	3	3				
29	Z370705000	SOPORTE SUPERIOR IZQUIERDO	LEFT UPPER SUPPORT	1	1	1	1				
	Q262040000	ARANDELA GROW. A6 A.304	WASHER GROW. A6 A.304	4	4	4	4				
	Q232040000	ARANDELA A6	WASHER A6	4	4	4	4				
	Q162040000	TUERCA EXAGONAL M6	HEXAGONAL NUT M6	4	4	4	4				
30	Z370725000	SUJECION DISTRIB. PRELAVADO	PREWASH DISTRIB. FASTENING	1	1	1	1				
	Q152047000	TORNILLO CILINDRI. CON CUELLO	CYLINDRICAL SCREW WITH NEC	2	2	2	2				
	Q262030000	ARANDELA GROW. A5 A.304	WASHER GROW. A5 A.304	2	2	2	2				
	Q212031000	TUERCA SOMBRERETE M5	COWL NUT M5	2	2	2	2				
31	Z203011000	CAMARA PRESOSTATO	PRESSURE SWITCH	1	1	1	1				
32	Z203012000	EMPALME PRESOSTATO	PRESSURE SWITCH CONNEX	1	1	1	1				
33	Z273006000	PRESOSTATO SIMPLE	SIMPLE PRESSURE SWITCH	1	1	1	1				
	Z602923000	SOPORTE PRESOSTATO	PRESSURE SWITCH SUPPORT	2	2	2	2				
	Q082032000	TORNILLO ALOMADO BZ-3,5X9,5	CURVED SCREW BZ-3.5x9.5	2	2	2	2				
	Q232040000	ARANDELA A6	WASHER A6	2	2	2	2				
	Q162040000	TUERCA EXAGONAL M6	HEXAGONAL NUT M6	2	2	2	2				
34	3702400000	TUBO GOMA NEGRO D 8*4	BLACK RUBBER PIPE Ø 8*4	1	1	1	1				
	P102154000	BRIDA ELASTICA TUBO	ELASTIC PIPE FLANGE	2	2	2	2				

MOD.	LAVAVAJILLAS MODULARES MODULAR DISHWASHERS	ZONA	PARTE FUNCIONAL DE PRELAVADO FUNCTIONAL PART OF PREWASH	PLANO	C-2142

ITEM	CODIGO	DENOMINACION	TEXTO	FI-370 I ECO-370 I	FI-370 D ECO-370 D	FI-550 I ECO-550 I	FI-550 D ECO-550 D				NOTAS
35	Z203013000	TORNILLO PRESOSTATO	PRESSURE SWITCH BOLT	1	1	1	1				
	Q307003000	JUNTA TORICA 16.01X10.77X2.62	O-RING 16.01X10.77X2.62	3	3	3	3				

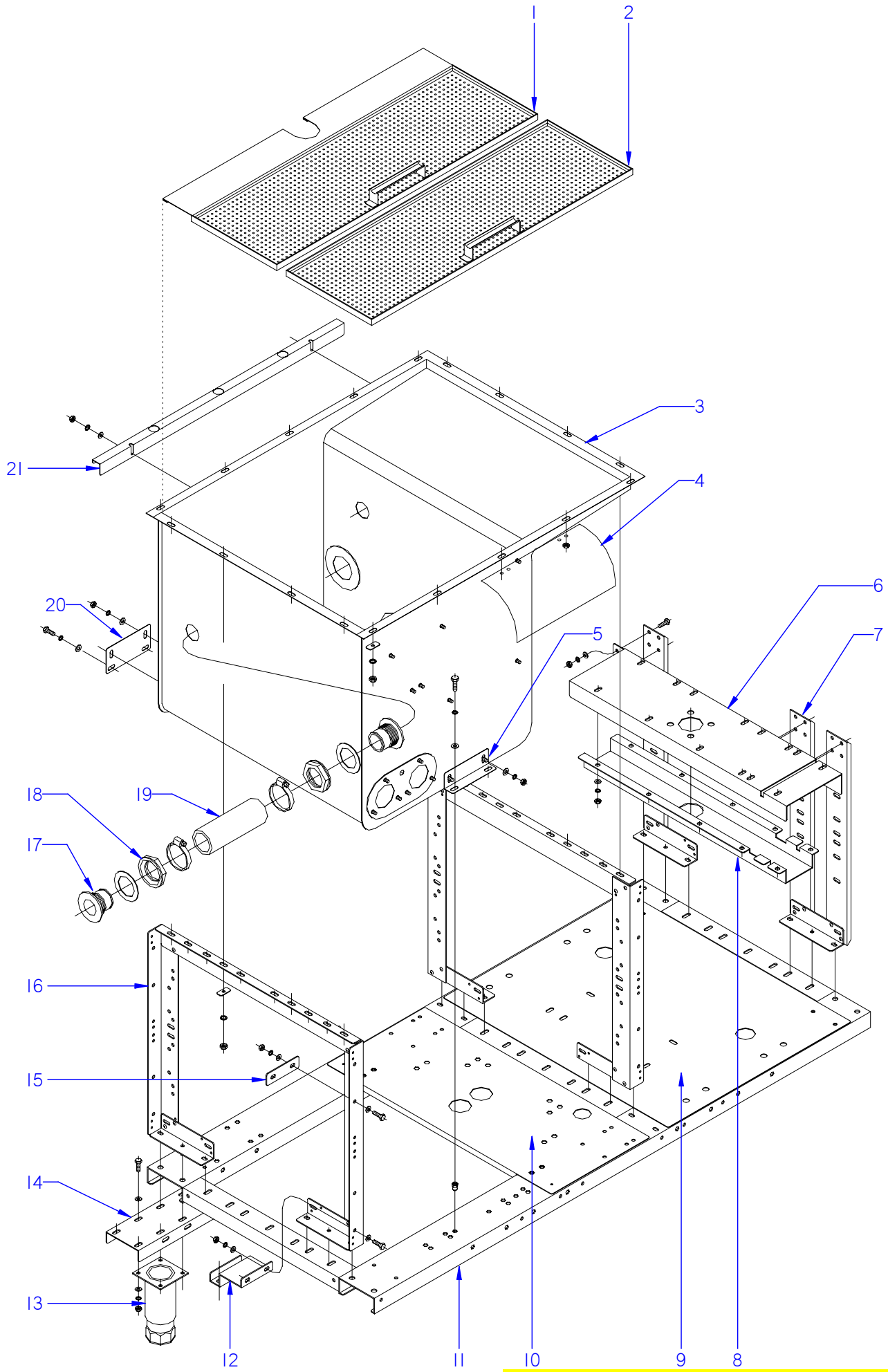

ITEM MARCADO EN COLOR = REPUESTO RECOMENDADO
COLOURED ITEM = RECOMMENDED SPARE PART

N plano	Firma	Fecha	Aparato		Lamina	
C-2143		2008-11	ARMAZON Y CUBA DE LAVADO LAVAVAJILLAS MODULARES		4	Fagor Industrial S.Coop. FAGOR Oñate

MOD.	LAVAVAJILLAS MODULARES MODULAR DISHWASHERS	ZONA	ARMAZON Y CUBA DE LAVADO PREWASH TUB AND FRAME	PLANO	C-2143

ITEM	CODIGO	DENOMINACION	TEXTO	FI-280 I ECO-280 I	FI-280 D ECO-280 D	FI-370 I ECO-370 I	FI-370 D ECO-370 D	FI-460 I ECO-460 I	FI-460 D ECO-460 D	FI-550 I ECO-550 I	FI-550 D ECO-550 D	NOTAS
1	Z310811000	BANDEJA LAVADO POSTERIOR	REAR WASH TRAY	1	1	1	1	2	2	2	2	
2	Z310813000	BANDEJA LAVADO ANTERIOR	FRONT WASH TRAY	1	1	1	1	2	2	2	2	
3	Z310320000	CUBA LAVADO SOLDADA	WELDED WASH TUB	1	1	1	1	2	2	2	2	
	Z310341000	ARANDELA RECTANGULAR	RECTANGULAR WASHER	18	18	18	18	36	36	36	36	
	Q262040000	ARANDELA GROW. A6 A.304	WASHER GROW. A6 A.304	18	18	18	18	36	36	36	36	
	Q162040000	TUERCA EXAGONAL M6	HEXAGONAL NUT M6	18	18	18	18	36	36	36	36	
4	Z313041000	CUBIERTA COMPONENTES	COMPONENT COVER	2	2	2	2	4	4	4	4	
5	Z270324000	AMARRE CUBA ANTERIOR	FRONT TUB FASTENING	1	1	1	1	2	2	2	2	
	Q302022000	ARANDELA 16X6X1.2 A.304	WASHER 16X6X1.2 A.304	4	4	4	4	8	8	8	8	
	Q262040000	ARANDELA GROW. A6 A.304	WASHER GROW. A6 A.304	4	4	4	4	8	8	8	8	
	Q162040000	TUERCA EXAGONAL M6	HEXAGONAL NUT M6	2	2	2	2	4	4	4	4	
	Q012042000	TORNILLO EXAGONAL M6X15	HEXAGONAL BOLT M6x15	2	2	2	2	4	4	4	4	
6	Z311824000	REFUERZO SOPORTE IZQUIERDO	LEFT SUPPORT REINFORCEMEN	1	_	1	_	1	_	1	_	
6	Z311825000	REFUERZO SOPORTE DERECHO	RIGHT SUPPORT REINFORCEME	_	1	_	1	_	1	_	1	
	Q302022000	ARANDELA 16X6X1.2 A.304	WASHER 16X6X1.2 A.304	15	15	15	15	15	15	15	15	
	Q262040000	ARANDELA GROW. A6 A.304	WASHER GROW. A6 A.304	15	15	15	15	15	15	15	15	
	Q162040000	TUERCA EXAGONAL M6	HEXAGONAL NUT M6	15	15	15	15	15	15	15	15	
7	Z310122000	POSTE PREACLARADO	REAR PRERINSE	2	2	2	2	2	2	2	2	
	Q411304000	REMACHE AVIBULB Ø4,8	AVIBULB RIVET Ø4.8	8	8	8	8	8	8	8	8	
	Q012043000	TORNILLO EXAGONAL M6X20	HEXAGONAL BOLT M6x20	7	7	7	7	7	7	7	7	
	Q262040000	ARANDELA GROW. A6 A.304	WASHER GROW. A6 A.304	7	7	7	7	7	7	7	7	
	Q162040000	TUERCA EXAGONAL M6	HEXAGONAL NUT M6	7	7	7	7	7	7	7	7	
8	Z311832000	REFUERZO	REINFORCEMENT	1	1	1	1	1	1	1	1	
9	Z310112000	PANEL TRANSVERSAL PREACLAR.	PRERINSE TRANSVERSAL PANE	1	1	1	1	1	1	1	1	
10	Z310111000	PANEL TRANSVERSAL LAVADO	TRANSVERSAL WASH PANEL	1	1	1	1	1	1	1	1	
	Q411304000	REMACHE AVIBULB Ø4,8	AVIBULB RIVET Ø4.8	2	2	2	2	2	2	2	2	
11	Z310101000	ARMAZON SOLDADO	WELDED FRAME	1	1	1	1	1	1	1	1	
S/Nº	Z350101000	ARMAZON LAVADO SOLDADO	WELDED WASH FRAME	_	_	_	_	1	1	1	1	
12	Z330104000	REFUERZO ARMAZON	FRAME REINFORCEMENT	_	_	_	_	2	2	2	2	
13	X260151000	PATA REGULABLE	ADJUSTABLE LEG	4	4	4	4	6	6	6	6	
14	Z330103000	SOPORTE PATA	LEG SUPPORT	_	_	_	_	2	2	2	2	

MOD.	LAVAVAJILLAS MODULARES MODULAR DISHWASHERS	ZONA	ARMAZON Y CUBA DE LAVADO PREWASH TUB AND FRAME	PLANO	C-2143

ITEM	CODIGO	DENOMINACION	TEXTO	FI-280 I ECO-280 I	FI-280 D ECO-280 D	FI-370 I ECO-370 I	FI-370 D ECO-370 D	FI-460 I ECO-460 I	FI-460 D ECO-460 D	FI-550 I ECO-550 I	FI-550 D ECO-550 D	NOTAS
15	Z330105000	EMPALME ARMAZON	FRAME CONNECTION	_	_	_	_	2	2	2	2	
16	Z310104000	SOPORTE CUBA LAVADO MONTA.	WASH TUB SUPPORT MOUNTED	2	2	2	2	4	4	4	4	
	Q012043000	TORNILLO EXAGONAL M6X20	HEXAGONAL BOLT M6x20	11	11	11	11	22	22	22	22	
	Q302022000	ARANDELA 16X6X1.2 A.304	WASHER 16X6X1.2 A.304	22	22	22	22	44	44	44	44	
	Q262040000	ARANDELA GROW. A6 A.304	WASHER GROW. A6 A.304	11	11	11	11	22	22	22	22	
	Q162040000	TUERCA EXAGONAL M6	HEXAGONAL NUT M6	11	11	11	11	22	22	22	22	
17	Z330901000	PASAMUROS COMUNICACION	COMMUNICATION BUSHING	_	_	_	_	2	2	2	2	
	Q307009000	ARANDELA 70X48X1.5	WASHER 70X48X1.5	_	_	_	_	2	2	2	2	
18	Z702101000	TUERCA R.11/2 DELRIN	R.11/2 DELRIN NUT	_	_	_	_	2	2	2	2	
19	Z330906000	MANGUERA COMUNICACION	COMMUNICATION HOSE	_	_	_	_	1	1	1	1	
	Q881324000	ABRAZADERA 50-70L	CLAMP 50-70L	_	_	_	_	2	2	2	2	
20	Z270325000	AMARRE CUBA POSTERIOR	REAR TUB FASTENING	1	1	1	1	2	2	2	2	
	Q302022000	ARANDELA 16X6X1.2 A.304	WASHER 16X6X1.2 A.304	4	4	4	4	8	8	8	8	
	Q262040000	ARANDELA GROW. A6 A.304	WASHER GROW. A6 A.304	8	8	8	8	16	16	16	16	
	Q162040000	TUERCA EXAGONAL M6	HEXAGONAL NUT M6	8	8	8	8	16	16	16	16	
	Q012042000	TORNILLO EXAGONAL M6X15	HEXAGONAL BOLT M6x15	4	4	4	4	8	8	8	8	
21	Z312907000	SOPORTE PANEL LAVADO	WASH PANEL SUPPORT	1	1	1	1	2	2	2	2	

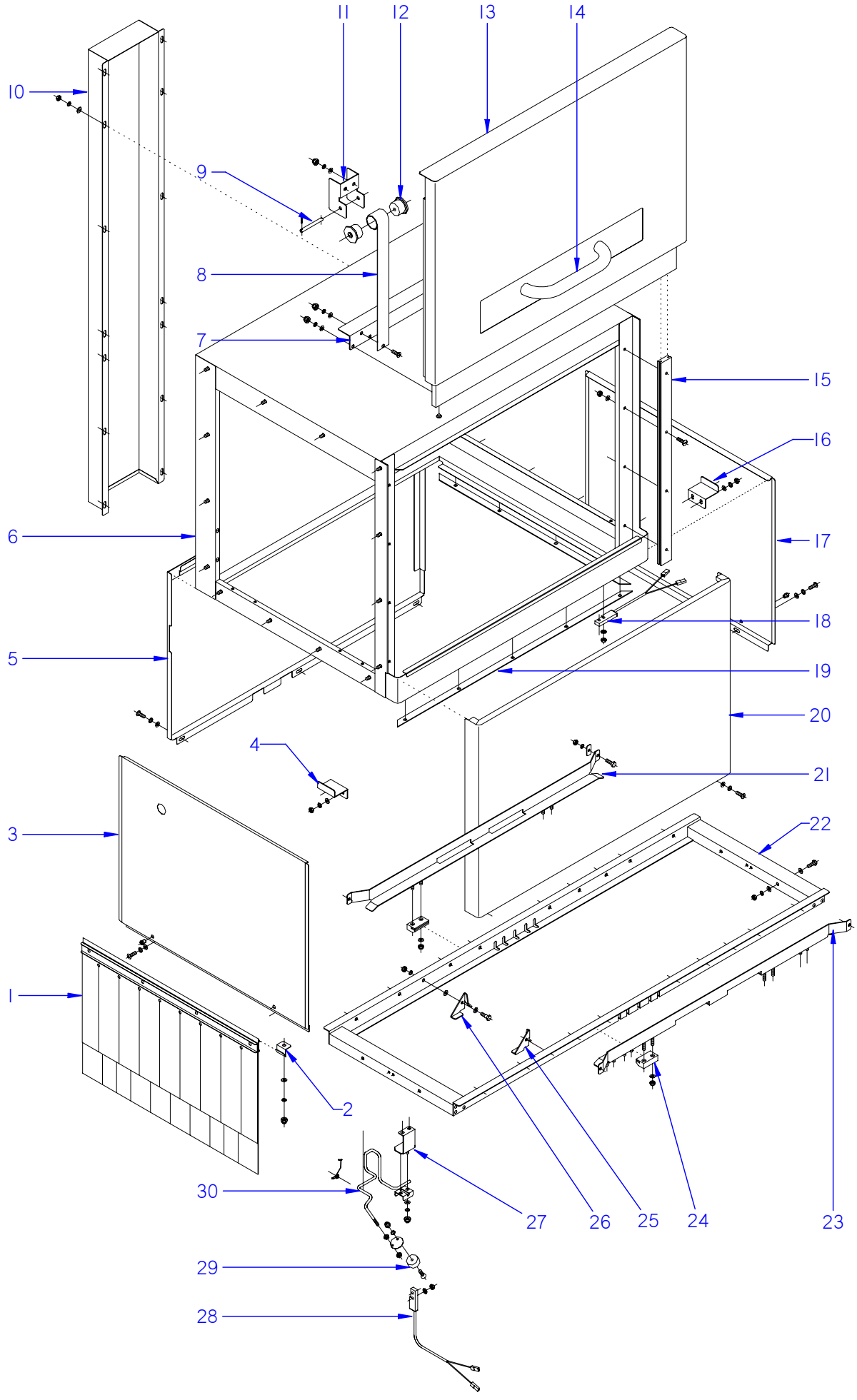

ITEM MARCADO EN COLOR = REPUESTO RECOMENDADO
COLOURED ITEM = RECOMMENDED SPARE PART

N plano	Firma	Fecha	Aparato		Lamina	
C-2144		2008-11	TUNEL DE LAVADO LAVAVAJILLAS MODULARES		5	Fagor Industrial S.Coop. FAGOR Onate

MOD.	LAVAVAJILLAS MODULARES MODULAR DISHWASHERS	ZONA	TUNEL DE LAVADO / WASH TUNNEL	PLANO	C-2144

ITEM	CODIGO	DENOMINACION	TEXTO	FI-280 I ECO-280 I	FI-280 D ECO-280 D	FI-370 I ECO-370 I	FI-370 D ECO-370 D	FI-460 I ECO-460 I	FI-460 D ECO-460 D	FI-550 I ECO-550 I	FI-550 D ECO-550 D	NOTAS
1	Z276429000	CORTINA INTERIOR COMPLETA	COMPLETE INTERIOR CURTAIN	2	2	1	1	3	3	2	2	
2	Z270326000	SUJECION CORTINA	CURTAIN FASTENING	2	2	2	2	6	4	6	4	
	Q232040000	ARANDELA A6	WASHER A6	2	2	2	2	6	4	6	4	
	Q212031000	TUERCA SOMBRERETE M5	COWL NUT M5	2	2	2	2	6	4	6	4	
3	Z312903000	PANEL LATERAL	SIDE PANEL	1	_	_	_	1	_	_	_	
4	Z312917000	APOYO PANEL DCHO.	RIGHT PANEL SUPPORT	2	_	_	_	2	_	_	_	
	Q262040000	ARANDELA GROW. A6 A.304	WASHER GROW. A6 A.304	4	_	_	_	4	_	_	_	
	Q162040000	TUERCA EXAGONAL M6	HEXAGONAL NUT M6	4	_	_	_	4	_	_	_	
5	Z312953000	PANEL POSTERIOR LAVADO IZDO	REAR LEFT WASH PANEL	1	_	_	_	_	_	_	_	
5	Z312951000	PANEL POSTERIOR LAVADO DCH	REAR RIGHT WASH PANEL	_	1	_	_	_	_	_	_	
5	Z312905000	PANEL POSTERIOR LAVADO	REAR WASH PANEL	_	_	1	1	1	1	1	1	ELIMINA. 19.12.13
5	12098651	PANEL POSTERIOR LAVADO COMP.	COMPLETE REAR WASH PANEL	_	_	1	1	1	1	1	1	INTROD. 19.12.13
S/Nº	Z312964000	PANEL POSTERIOR LAVADO IZDO	REAR LEFT WASH PANEL	_	_	_	_	1	_	1	_	
S/Nº	Z312965000	PANEL POSTERIOR LAVADO DCHO	REAR RIGHT WASH PANEL	_	_	_	_	_	1	_	1	
S/Nº	Z312968000	PANEL POSTERIO. LAVADO FI-55O	REAR WASH PANEL FI-55O	_	_	_	_	_	_	1	1	
6	Z310300000	CAJA LAVADO SOLDADA	WELDED WASH BOX	1	1	1	1	2	2	2	2	
7	Z310512000	AMARRE RESORTE LAVADO	WASH SPRING FASTENING	1	1	1	1	2	2	2	2	ELIMINA. 10.02.09
7	Z270517000	AMARRE RESORTE	SPRING FASTENING	1	1	1	1	2	2	2	2	INTROD. 10.02.09
	Q152004000	TORNILLO APLASTADO M5x13 A304	FLAT HEADED BOLT M5x13 A304	1	1	1	1	4	4	4	4	
	Q232040000	ARANDELA A6	WASHER A6	3	3	3	3	12	12	12	12	
	Q262030000	ARANDELA GROW. A5 A.304	WASHER GROW. A5 A.304	3	3	3	3	12	12	12	12	
	Q212031000	TUERCA SOMBRERETE M5	COWL NUT M5	3	3	3	3	12	12	12	12	
8	Z310511000	RESORTE FUERZA CONSTANTE	CONSTANT FORCE SPRING	2	2	2	2	4	4	4	4	
9	Z270514000	EJE RESORTE	SPRING SHAFT	2	2	2	2	4	4	4	4	
	Q352001000	PASADOR DE ALETAS 2X20	COTTER PIN 2X20	4	4	4	4	8	8	8	8	
10	Z313049000	CUBIERTA POST.CUADRO ELECT.	ELECT. PANEL REAR COVER	1	1	1	1	1	1	1	1	
	Q262040000	ARANDELA GROW. A6 A.304	WASHER GROW. A6 A.304	38	38	38	38	38	38	38	38	
	Q162040000	TUERCA EXAGONAL M6	HEXAGONAL NUT M6	24	24	24	24	24	24	24	24	
	Q212040000	TUERCA SOMBRERETE M6	COWL NUT M6	14	14	14	14	14	14	14	14	
	Q152017000	TORNILLO AMARRE M6X13 A304	FASTENING BOLT M6X13 A304	4	4	4	4	4	4	4	4	
	Q221343000	REMACHE EXAGONAL M6	HEXAGONAL RIVET M6	4	4	4	4	4	4	4	4	

MOD.	LAVAVAJILLAS MODULARES MODULAR DISHWASHERS	ZONA	TUNEL DE LAVADO / WASH TUNNEL	PLANO	C-2144

ITEM	CODIGO	DENOMINACION	TEXTO	FI-280 I ECO-280 I	FI-280 D ECO-280 D	FI-370 I ECO-370 I	FI-370 D ECO-370 D	FI-460 I ECO-460 I	FI-460 D ECO-460 D	FI-550 I ECO-550 I	FI-550 D ECO-550 D	NOTAS
11	Z270511000	SOPORTE RESORTE	SPRING SUPPORT	2	2	2	2	4	4	4	4	
	Q232040000	ARANDELA A6	WASHER A6	4	4	4	4	8	8	8	8	
	Q262030000	ARANDELA GROW. A5 A.304	WASHER GROW. A5 A.304	4	4	4	4	8	8	8	8	
	Q212031000	TUERCA SOMBRERETE M5	COWL NUT M5	4	4	4	4	8	8	8	8	
12	Z270512000	ENCAJE RESORTE	SPRING SOCKET	4	4	4	4	8	8	8	8	
13	Z310501000	PUERTA LAVADO MONTADA	WASH DOOR MOUNTED	1	1	1	1	2	2	2	2	
	Z270516000	TOPE	STOP	2	2	2	2	4	4	4	4	
	Z270531000	SUJECION PUERTA	DOOR FASTENING	1	1	1	1	2	2	2	2	ELIMIN. 10.02.09
S/Nº	Z510556000	SOPORTE ENGANCHE PUERTA	SUPPORT DOOR LATCH	1	1	1	1	1	1	1	1	INTROD. 10.02.09
S/Nº	Z510550000	ENGANCHE PUERTA COMPLETO	FULL DOOR HOOK	1	1	1	1	1	1	1	1	ELIMINAD. 25.10.13
S/Nº	12096567	ENGANCHE PUERTA COMPLETO	FULL DOOR HOOK	1	1	1	1	1	1	1	1	NTRODUC. 25.10.13
S/Nº	Z276122000	CHECK LIST ARRASTRE FAGOR	CHECK LIST	1	1	1	1	1	1	1	1	INTROD. 19.07.10
14	Z200550000	ASA PUERTA COMPLETA	COMPLETE DOOR HANDLE	1	1	1	1	2	2	2	2	
15	Z270336000	GUIA PUERTA	DOOR GUIDE	2	2	2	2	4	4	4	4	
	Q152045000	TORNILLO AMARRE M6X25	FASTENING BOLT M6X25	8	8	8	8	16	16	16	16	
	Q232040000	ARANDELA A6	WASHER A6	8	8	8	8	16	16	16	16	
	Q222012000	TUERCA AUTOBLOCANTE M6	SELF-LOCKING NUT M6	8	8	8	8	16	16	16	16	
16	Z312917000	APOYO PANEL DERECHO	RIGHT PANEL SUPPORT	_	2	_	_	_	2	_	_	
17	Z312903000	PANEL LATERAL	SIDE PANEL	_	1	_	_	_	1	_	_	
18	Z100522000	INTERRUPTOR MAGNETICO AC	MAGNETIC SWITCH AC	1	1	1	1	2	2	2	2	
	Q162020000	TUERCA EXAGONAL M4	HEXAGONAL NUT M4	2	2	2	2	4	4	4	4	
19	Z310324000	PERFIL LONGITUDINAL LAVADO	LONGITUDINAL WASH PROFILE	2	2	2	2	4	4	4	4	
S/Nº	Z310325000	PERFIL TRANSVERSAL LAVADO	TRANSVERSAL WASH PROFILE	2	2	2	2	4	4	4	4	
20	Z312901000	PANEL FRONTAL LAVADO COMPL.	COMPL. FRONT WASH PANEL	1	1	1	1	2	2	2	2	
21	Z315017000	GUIA LAVADO POSTERIOR	REAR WASH GUIDE	1	1	1	1	2	2	2	2	
	Z310341000	ARANDELA RECTANGULAR	RECTANGULAR WASHER	6	6	6	6	12	12	12	12	
	Q162040000	TUERCA EXAGONAL M6	HEXAGONAL NUT M6	6	6	6	6	12	12	12	12	
	Q232040000	ARANDELA A6	WASHER A6	6	6	6	6	12	12	12	12	
	Q012042000	TORNILLO EXAGONAL M6X15	HEXAGONAL BOLT M6x15	6	6	6	6	12	12	12	12	
22	Z315021000	SOPORTE UÑA LAVADO	WASH CLAW SUPPORT	1	1	1	1	1	1	1	1	
S/Nº	Z355001000	SOPORTE UÑA LAVADO	WASH CLAW SUPPORT	_	_	_	_	1	1	1	1	

MOD.	LAVAVAJILLAS MODULARES MODULAR DISHWASHERS	ZONA	TUNEL DE LAVADO / WASH TUNNEL	PLANO	C-2144

ITEM	CODIGO	DENOMINACION	TEXTO	FI-280 I ECO-280 I	FI-280 D ECO-280 D	FI-370 I ECO-370 I	FI-370 D ECO-370 D	FI-460 I ECO-460 I	FI-460 D ECO-460 D	FI-550 I ECO-550 I	FI-550 D ECO-550 D	NOTAS
23	Z315037000	GUIA DE LAVADO ANTERIOR IZDO.	FRONT LEFT WASH GUIDE	1	_	1	_	2	_	2	_	
23	Z315015000	GUIA DE LAVADO ANTERIOR DCH.	FRONT RIGHT WASH GUIDE	_	1	_	1	_	2	_	2	
24	Z275075000	DESLIZAMIENTO GUIAS	GUIDE SLIDE	6	6	6	6	12	12	12	12	
	Q232040000	ARANDELA A6	WASHER A6	12	12	12	12	24	24	24	24	
	Q222012000	TUERCA AUTOBLOCANTE M6	SELF-LOCKING NUT M6	12	12	12	12	24	24	24	24	
25	Z275078000	UÑA ARRASTRE DERECHA LASER	LASER RIGHT DRAG CLAW	10	16	10	16	16	16	16	16	
26	Z275077000	UÑA ARRASTRE IZQUIERDA LASER	LASER LEFT DRAG CLAW	10	16	10	16	16	16	16	16	
	Q232050000	ARANDELA A8	WASHER A8	40	40	40	40	64	64	64	64	
	Q152046000	TORNILLO EXAGON. CON CUELLO	HEXAGONAL BOLT. WITH NECK	20	20	20	20	32	32	32	32	
27	Z271211000	U SOPORTE PULSADOR	BUTTON U-SUPPORT	1	1	1	1	1	1	_	_	
	Q232040000	ARANDELA A6	WASHER A6	2	2	2	2	2	2	_	_	
	Q262030000	ARANDELA GROW. A5 A.304	WASHER GROW. A5 A.304	2	2	2	2	2	2	_	_	
	Q212031000	TUERCA SOMBRERETE M5	COWL NUT M5	2	2	2	2	2	2	_	_	
28	Z100522000	INTERRUPTOR MAGNETICO AC	MAGNETIC SWITCH AC	1	1	1	1	1	1	_	_	
	Q242020000	ARANDELA ABANICO A4 A.304	FAN WASHER A4 A.304	2	2	2	2	2	2	_	_	
	Q162020000	TUERCA EXAGONAL M4	HEXAGONAL NUT M4	2	2	2	2	2	2	_	_	
29	Z271207000	IMAN	MAGNET	1	1	1	1	1	1	_	_	
	Z271206000	SOPORTE IMAN	MAGNET BRACKET	1	1	1	1	1	1	_	_	
	Q072033000	TORN.G.S. M5X20 A304	BOLT G.S. M5X20 A304	1	1	1	1	1	1	_	_	
	Q212031000	TUERCA SOMBRERETE M5	COWL NUT M5	1	1	1	1	1	1	_	_	
	Q232030000	ARANDELA A5	WASHER A5	1	1	1	1	1	1	_	_	
	Q162040000	TUERCA EXAGONAL M6	HEXAGONAL NUT M6	2	2	2	2	2	2	_	_	
30	Z311253000	PULSADOR T.E. IZQUIERDO	T.E. BUTTON LEFT	1	_	_	_	1	_	_	_	
30	Z311256000	PULSADOR T.E. DERECHO	T.E. BUTTON RIGHT	_	1	_	_	_	1	_	_	
S/Nº	Z271201000	SOPORTE PULSADOR	BUTTON SUPPORT	1	1	1	1	1	1	_	_	
	Q232040000	ARANDELA A6	WASHER A6	2	2	2	2	2	2	_	_	
	Q262030000	ARANDELA GROW. A5 A.304	WASHER GROW. A5 A.304	2	2	2	2	2	2	_	_	
	Q212031000	TUERCA SOMBRERETE M5	COWL NUT M5	2	2	2	2	2	2	_	_	
	Z271203000	MUELLE TORSION IZDO 27601	LEFT TORSION SPRING 27601	1	1	1	1	1	1	_	_	

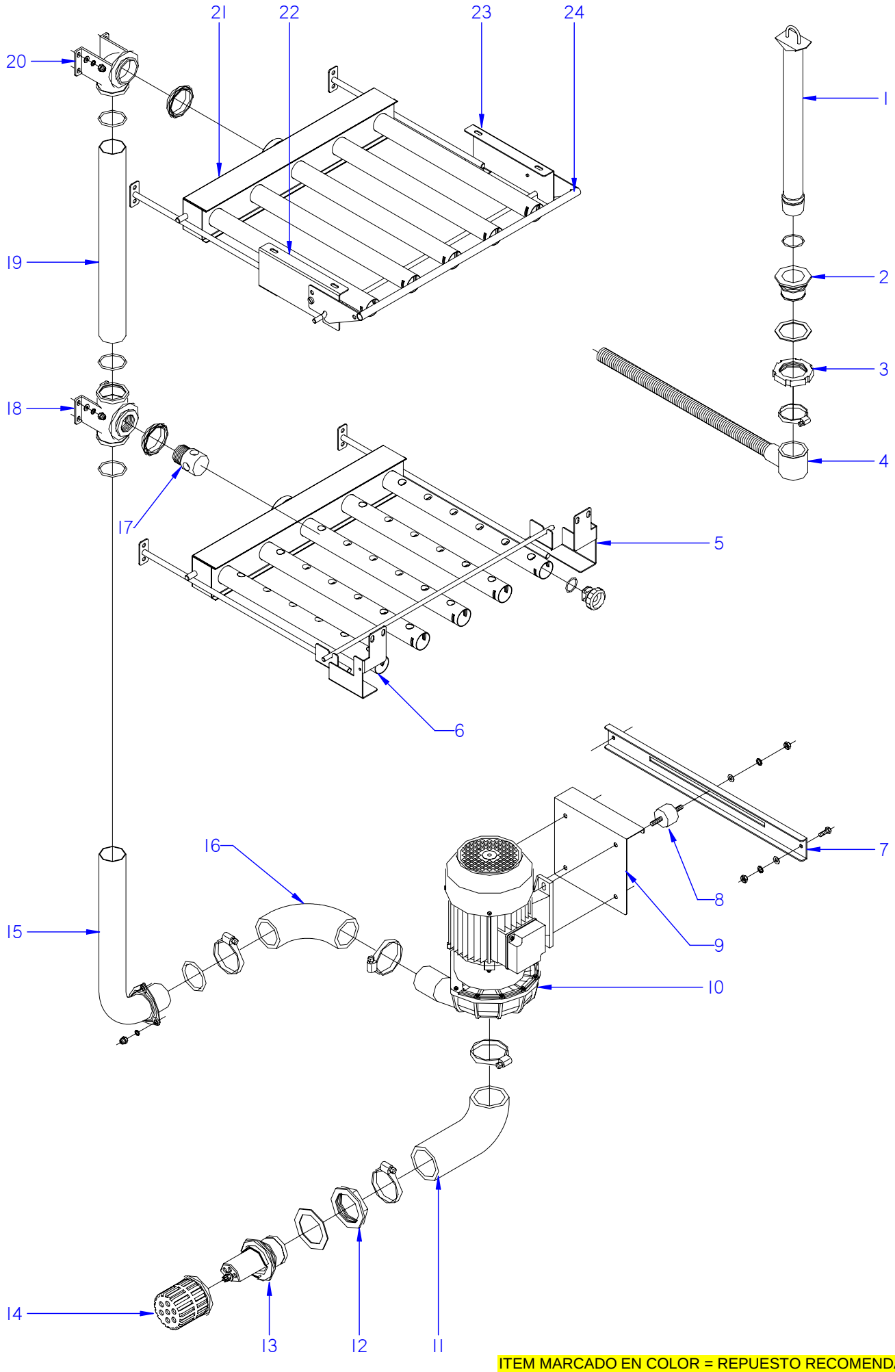

ITEM MARCADO EN COLOR = REPUESTO RECOMENDADO
COLOURED ITEM = RECOMMENDED SPARE PART

N plano	Firma	Fecha	Aparato	PARTE FUNCIONAL LAVADO	Lamina	
C-2145		2008-11	LAVAVAJILLAS MODULARES		6	Fagor Industrial S.Coop. FAGOR Oñate

MOD.	LAVAVAJILLAS MODULARES MODULAR DISHWASHERS	ZONA	PARTE FUNCIONAL DE LAVADO FUNCTIONAL PART OF WASH	PLANO	C-2145

ITEM	CODIGO	DENOMINACION	TEXTO	FI-280 ECO-280	FI-370 ECO-370	FI-460 ECO-460	FI-550 ECO-550				NOTAS
1	Z330921000	ALIVIADERO	OVERFLOW	1	1	2	2				
	Q307051000	JUNTA TORICA Ø36.17X41.41X2.6	O-RING Ø36.17X41.41X2.6	1	1	2	2				
2	Z710902000	PASAMUROS DESAGUE	DRAINAGE BUSHING	1	1	2	2				
	Q307059000	JUNTA Ø72x56x2	JOINT Ø72x56x2	1	1	2	2				
3	Q220001000	TUERCA RANURADA M56X2,5 HOS	GROOVED NUT M56X2.5 HOS	1	1	2	2				
4	Z200910000	MANGUERA DESAGUE	DRAINAGE HOSE	1	1	2	2				
	Q881307000	ABRAZADERA 40-60	CLAMP 40-60	1	1	2	2				
5	Z370711000	SOPORTE INFERIOR DERECHO	RIGHT LOWER SUPPORT	1	1	2	2				
	Q262040000	ARANDELA GROW. A6 A.304	WASHER GROW. A6 A.304	2	2	4	4				
	Q232040000	ARANDELA A6	WASHER A6	2	2	4	4				
	Q162040000	TUERCA EXAGONAL M6	HEXAGONAL NUT M6	2	2	4	4				
6	Z370715000	SOPORTE INFERIOR IZQUIERDO	LEFT LOWER SUPPORT	1	1	2	2				
	Q262040000	ARANDELA GROW. A6 A.304	WASHER GROW. A6 A.304	2	2	4	4				
	Q232040000	ARANDELA A6	WASHER A6	2	2	4	4				
	Q162040000	TUERCA EXAGONAL M6	HEXAGONAL NUT M6	2	2	4	4				
7	Z311001000	SOPORTE MOTOBOMBA LAVADO	WASH MOTORPUMP SUPPORT	2	2	4	4				
	Q012042000	TORNILLO EXAGONAL M6X15	HEXAGONAL BOLT M6x15	4	4	8	8				
	Q302022000	ARANDELA 16X6X1.2 A.304	WASHER 16X6X1.2 A.304	8	8	16	16				
	Q262040000	ARANDELA GROW. A6 A.304	WASHER GROW. A6 A.304	4	4	8	8				
	Q162040000	TUERCA EXAGONAL M6	HEXAGONAL NUT M6	4	4	8	8				
8	Z101002000	ANTIVIBRANTE 2601029	ANTIVIBRATION 2601029	4	4	8	8				
	Q232050000	ARANDELA A8	WASHER A8	4	4	8	8				
9	Z311002000	SOPORTE ANTIVIBRANTE	ANTIVIBRATION SUPPORT	1	1	2	2				
	P504920000	ARANDELA DEPOSITO	TANK WASHER	4	4	8	8				
	Q262050000	ARANDELA GROW. A8 A.304	WASHER GROW. A8 A.304	8	8	16	16				
	Q162050000	TUERCA EXAGONAL M8X1	HEXAGONAL NUT M8x1	8	8	16	16				
10	Z101001000	MOTOBOMBA 230-400 V.	MOTORPUMP 230-400 V.	1	1	2	2				
10	Z104101000	MOTOBOMBA 220-380V. 60HZ.	MOTORPUMP 220-380V. 60HZ.	1	1	2	2				
11	Z310904000	CODO ASPIRACION 1003444	EXTRACTOR ELBOW 1003444	1	1	2	2				
	Q881326000	ABRAZADERA 70-90	CLAMP 70-90	2	2	4	4				

MOD.	LAVAVAJILLAS MODULARES MODULAR DISHWASHERS	ZONA	PARTE FUNCIONAL DE LAVADO FUNCTIONAL PART OF WASH	PLANO	C-2145

ITEM	CODIGO	DENOMINACION	TEXTO	FI-280 ECO-280	FI-370 ECO-370	FI-460 ECO-460	FI-550 ECO-550				NOTAS
12	Z310903000	TUERCA PASAMUROS	WALL BUSHING NUT	1	1	2	2				
	Z310902000	ARANDELA 92x66x2	WASHER 92x66x2	1	1	2	2				
13	Z330787000	REDUCCION PRELAVADO	PREWASH REDUCTION	_	1	1	1				
14	Z310906000	FILTRO	FILTER	1	1	2	2				
15	Z310701000	CONDUCCION INFERIOR LAVADO	LOWER WASH PIPE	1	1	2	2				
	Q307044000	JUNTA TORICA 67.18x56.52x5.3	O-RING 67.18x56.52x5.3	1	1	2	2				
	Q262040000	ARANDELA GROW. A65 A.304	WASHER GROW. A65 A.304	3	3	6	6				
	Q212040000	TUERCA SOMBRERETE M6	COWL NUT M6	3	3	6	6				
16	Z310905000	CODO IMPULSION	IMPULSE ELBOW	1	1	2	2				
	Q881324000	ABRAZADERA 50-70L	CLAMP 50-70L	2	2	4	4				
17	Z310753000	REDUCCION LAVADO	WASH REDUCTION	1	1	2	2				
18	Z310764000	PASAMUROS INFERIOR LAVADO	LOWER WASH BUSHING	1	1	2	2				
	Q307064000	JUNTA TORICA 57,31x52,07x2,62	O-RING 57.31x52.07x2.62	3	3	6	6				
	Q262040000	ARANDELA GROW. A6 A.304	WASHER GROW. A6 A.304	4	4	8	8				
	Q232040000	ARANDELA A6	WASHER A6	4	4	8	8				
	Q162040000	TUERCA EXAGONAL M6	HEXAGONAL NUT M6	4	4	8	8				
19	Z310708000	CONDUCCION SUPERIOR LAVADO	UPPER WASH PIPE	1	1	2	2				
20	Z310765000	PASAMUROS SUPERIOR LAVADO	UPPER WASH BUSHING	1	1	2	2				
	Q307057000	JUNTA TOR.47.22x54.28x3.53	O-RING 47.22x54.28x3.53	2	2	4	4				
	Q262040000	ARANDELA GROW. A6 A.304	WASHER GROW. A6 A.304	4	4	8	8				
	Q232040000	ARANDELA A6	WASHER A6	4	4	8	8				
	Q162040000	TUERCA EXAGONAL M6	HEXAGONAL NUT M6	4	4	8	8				
21	Z370731000	DISTRIBUIDOR LAVADO COMPLET.	COMPLETE WASH DISTRIBUTOR	2	2	4	4				
	Z310721000	TAPON CIERRE	CLOSING PLUG	10	10	20	20				
	Q307068000	JUNTA TORICA Ø33X27X3	O-RING Ø33X27X3	10	10	20	20				
22	Z370705000	SOPORTE SUPERIOR IZQUIERDO	LEFT UPPER SUPPORT	1	1	2	2				
	Q262040000	ARANDELA GROW. A6 A.304	WASHER GROW. A6 A.304	2	2	4	4				
	Q232040000	ARANDELA A6	WASHER A6	2	2	4	4				
	Q162040000	TUERCA EXAGONAL M6	HEXAGONAL NUT M6	2	2	4	4				

MOD.	LAVAVAJILLAS MODULARES MODULAR DISHWASHERS	ZONA	PARTE FUNCIONAL DE LAVADO FUNCTIONAL PART OF WASH	PLANO	C-2145

ITEM	CODIGO	DENOMINACION	TEXTO	FI-280 ECO-280	FI-370 ECO-370	FI-460 ECO-460	FI-550 ECO-550				NOTAS
23	Z370701000	SOPORTE SUPERIOR DERECHO	RIGHT UPPER SUPPORT	1	1	2	2				
	Q262040000	ARANDELA GROW. A6 A.304	WASHER GROW. A6 A.304	2	2	4	4				
	Q232040000	ARANDELA A6	WASHER A6	2	2	4	4				
	Q162040000	TUERCA EXAGONAL M6	HEXAGONAL NUT M6	2	2	4	4				
24	Z370721000	SUJECION DISTRIBUIDOR COMPL.	COMPL. DISTRIBUTOR FASTENIN	1	1	2	2				
	Q152047000	TORNILLO CILINDRI. CON CUELLO	CYLINDRICAL SCREW WITH NEC	2	2	4	4				
	Q262030000	ARANDELA GROW. A5 A.304	WASHER GROW. A5 A.304	2	2	4	4				
	Q212031000	TUERCA SOMBRERETE M5	COWL NUT M5	2	2	4	4				

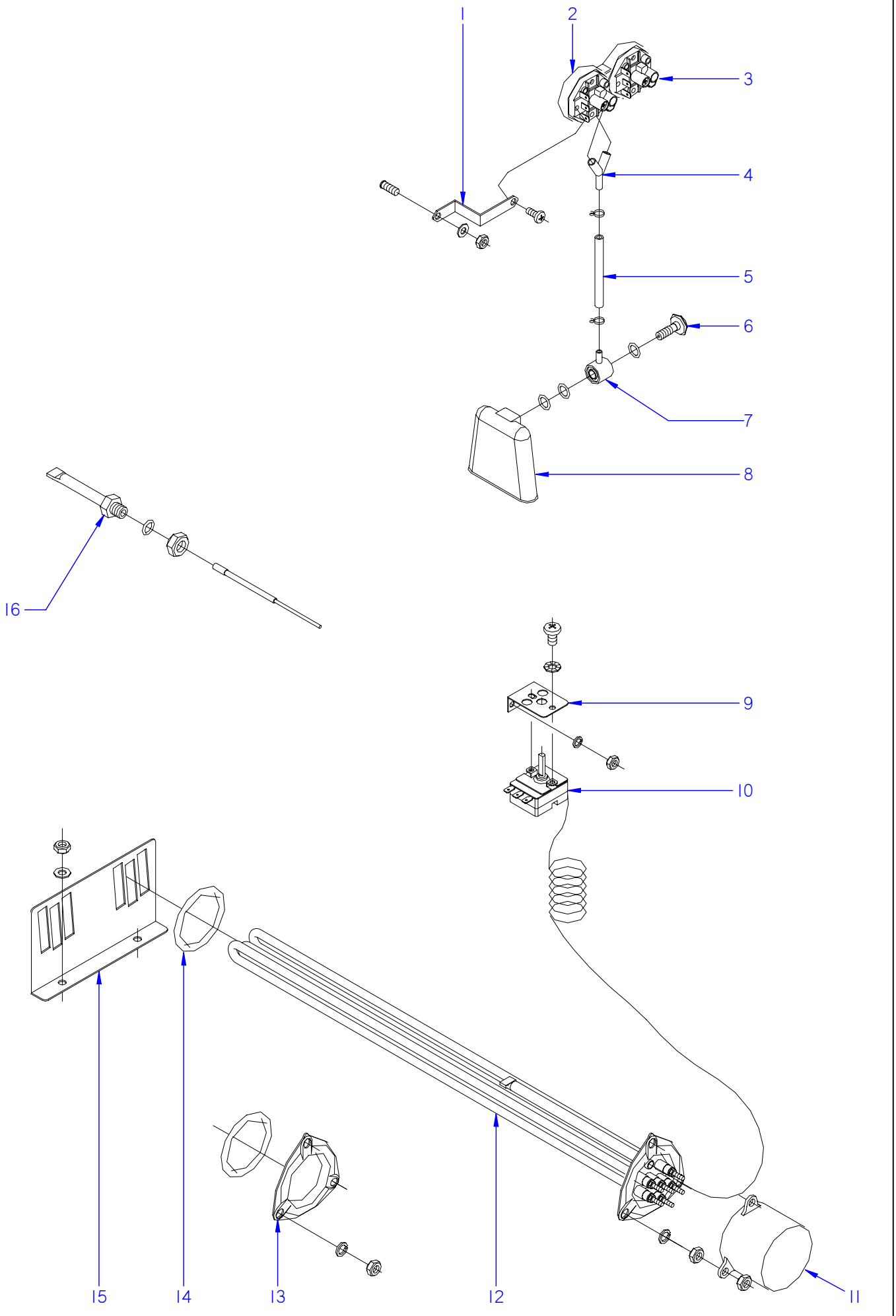

ITEM MARCADO EN COLOR = REPUESTO RECOMENDADO
COLOURED ITEM = RECOMMENDED SPARE PART

N plano	Firma	Fecha	Aparato	Lamina	
C-2146		2008-11	NIVELES Y CALENTAMIENTO DE LAVADO LAVAVAJILLAS MODULARES	7	Fagor Industrial S.Coop. Oñate

MOD.	LAVAVAJILLAS MODULARES MODULAR DISHWASHERS	ZONA	NIVELES Y CALENTAMIENTO DE LAVADO WASH LEVELS AND HEATING	PLANO	C-2146

ITEM	CODIGO	DENOMINACION	TEXTO	FI-280 ECO-280	FI-370 ECO-370	FI-460 ECO-460	FI-550 ECO-550				NOTAS
1	Z602923000	SOPORTE PRESOSTATO	PRESSURE SWITCH SUPPORT	1	1	1	2				
	Q082032000	TORNILLO ALOMADO BZ-3,5X9,5	CURVED SCREW BZ-3.5x9.5	1	1	1	2				
	Q232040000	ARANDELA A6	WASHER A6	1	1	1	2				
	Q162040000	TUERCA EXAGONAL M6	HEXAGONAL NUT M6	1	1	1	2				
2	Z403021000	PRESOSTATO SIMPLE	SIMPLE PRESSURE SWITCH	1	1	1	2				ELIMINADO 12.05.09
3	Z273006000	PRESOSTATO SIMPLE	SIMPLE PRESSURE SWITCH	1	1	2	1				
	Q162040000	TUERCA EXAGONAL M6	HEXAGONAL NUT M6	1	1	1	1				
4	Z103077000	RACORD EN Y	Y-CONNECTION	1	1	1	2				ELIMINADO 12.05.09
5	3702400000	TUBO GOMA NEGRO D 8*4	BLACK RUBBER PIPE Ø 8*4	1	1	2	2				
	P102154000	BRIDA ELASTICA TUBO	ELASTIC PIPE FLANGE	2	2	4	4				
6	Z203013000	TORNILLO PRESOSTATO	PRESSURE SWITCH BOLT	1	1	2	2				
	Q307003000	JUNTA TORICA 16.01X10.77X2.62	O-RING 16.01X10.77X2.62	3	3	6	6				
7	Z203012000	EMPALME PRESOSTATO	PRESSURE SWITCH CONNEX	1	1	2	2				
8	Z203011000	CAMARA PRESOSTATO	PRESSURE SWITCH	1	1	2	2				
S/Nº	Z273072000	REGULACION TERMOSTATO 63ºC	THERMOSTAT CONTROL 63ºC	1	1	1	2				ELIMINADO 30.11.2012
S/Nº	12047241	REGULACION 63ºC Tc DE 85ºC	CONTROL 63ºC Tc DE 85ºC	1	1	1	2				INTRODUCIDO 30.11.2012
9	Z850111000	SOPORTE TERMOSTATO	THERMOSTAT SUPPORT	1	1	1	1				
	Q152024000	TORNILLO AVELLANADO M4X8	COUNTERSUNK BOLT M4x8	2	2	2	2				
	Q232040000	ARANDELA A6	WASHER A6	2	2	2	2				
	Q162040000	TUERCA EXAGONAL M6	HEXAGONAL NUT M6	2	2	2	2				
10	Z203014000	TERMOSTATO CALDERIN	WASH DRUM THERMOSTAT	1	1	1	2				ELIMINADO 30.11.2012
10	12040858	TERMOSTATO CALDERIN	WASH DRUM THERMOSTAT	1	1	1	2				INTRODUCIDO 30.11.2012
11	Z101723000	CAPERUZA RESISTENCIA	RESISTOR HOOD	2	2	2	3				
	Q163140000	TUERCA EXAGONAL M6 LATON	HEXAGONAL NUT M6 BRASS	12	12	12	18				
	Q262040000	ARANDELA GROW. A6 A.304	WASHER GROW. A6 A.304	6	6	6	9				
12	Z101740000	RESISTENCIA COMPLET.230V.	COMP. RESISTOR 230V.	2	2	2	3				
13	Z310703010	BRIDA CIEGA	BLIND FLANGE	_	_	2	1				
	Q262040000	ARANDELA GROW. A6 A.304	WASHER GROW. A6 A.304	_	_	6	3				
	Q162040000	TUERCA EXAGONAL M6	HEXAGONAL NUT M6	_	_	6	3				
14	Q307044000	JUNTA TORICA Ø 67.18x56.52x5.3	O-RING Ø 67.18x56.52x5.3	4	4	4	4				

MOD.	LAVAVAJILLAS MODULARES MODULAR DISHWASHERS	ZONA	NIVELES Y CALENTAMIENTO DE LAVADO WASH LEVELS AND HEATING	PLANO	C-2146

ITEM	CODIGO	DENOMINACION	TEXTO	FI-280 ECO-280	FI-370 ECO-370	FI-460 ECO-460	FI-550 ECO-550				NOTAS
15	Z313602000	SUJECION RESISTENCIA	RESISTOR FASTENING	1	1	1	1				
	Q232040000	ARANDELA A6	WASHER A6	2	2	2	2				
	Q162040000	TUERCA EXAGONAL M6	HEXAGONAL NUT M6	2	2	2	2				
16	Z263002000	VAINA INDICADOR COMPLETA	COMPLETE INDICATOR SHELL	1	1	1	1				
	Q307048000	JUNTA TORICA Ø 9.12X16.18X3.53	O-RING Ø 9.12X16.18X3.53	2	2	2	2				
	Q162070000	TUERCA EXAGONAL M12	HEXAGONAL NUT M12	2	2	2	2				

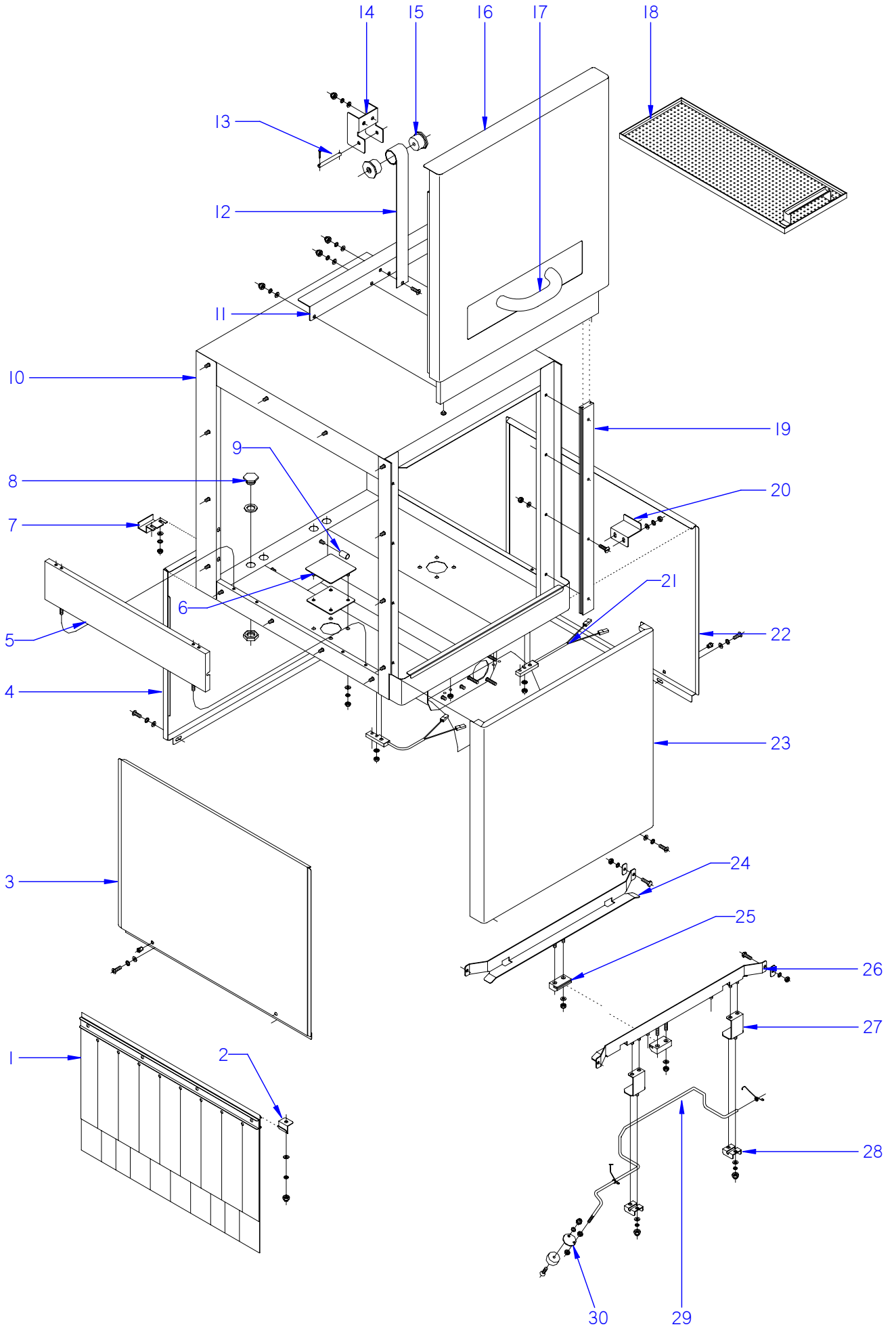

ITEM MARCADO EN COLOR = REPUESTO RECOMENDADO
COLOURED ITEM = RECOMMENDED SPARE PART

N plano	Firma	Fecha	Aparato		Lamina	
C-2147		2008-11	TUNEL DE PREACLARADO LAVAVAJILLAS MODULARES		8	Fagor Industrial S.Coop. Onate

MOD.	LAVAVAJILLAS MODULARES MODULAR DISHWASHERS	ZONA	TUNEL DE PREACLARADO / PRERINSE TUNNEL	PLANO	C-2147

ITEM	CODIGO	DENOMINACION	TEXTO	FI-280 I ECO-280 I	FI-280 D ECO-280 D	FI-370 I ECO-370 I	FI-370 D ECO-370 D	FI-460 I ECO-460 I	FI-460 D ECO-460 D	FI-550 I ECO-550 I	FI-550 D ECO-550 D	NOTAS
1	Z276429000	CORTINA INTERIOR COMPLETA	COMPLETE INTERIOR CURTAIN	1	1	1	1	1	1	1	1	
2	Z270326000	SUJECION CORTINA	CURTAIN FASTENING	2	2	2	2	2	2	2	2	
	Q232040000	ARANDELA A6	WASHER A6	2	2	2	2	2	2	2	2	
	Q262030000	ARANDELA GROW. A5 A.304	WASHER GROW. A5 A.304	2	2	2	2	2	2	2	2	
	Q212031000	TUERCA SOMBRERETE M5	COWL NUT M5	2	2	2	2	2	2	2	2	
3	Z312903000	PANEL LATERAL	SIDE PANEL	_	1	_	1	_	1	_	1	
4	Z312913000	PANEL POST. PREACLARADO IZDO	REAR PANEL LEFT PRERINSE	1	_	1	_	1	_	1	_	
4	Z312955000	PANEL POST. PREACLARADO DCH	REAR PANEL RIGHT PRERINSE	_	1	_	1	_	1	_	1	
	Q302022000	ARANDELA 16X6X1.2 A.304	WASHER 16X6X1.2 A.304	6	6	6	6	6	6	6	6	
	Q262040000	ARANDELA GROW. A6 A.304	WASHER GROW. A6 A.304	6	6	6	6	6	6	6	6	
	Q162040000	TUERCA EXAGONAL M6	HEXAGONAL NUT M6	6	6	6	6	6	6	6	6	
	Q152004000	TORNILLO APLASTADO M5x13 A304	FLAT HEADED BOLT M5x13 A304	24	24	24	24	24	24	24	24	
	Q302022000	ARANDELA 16X6X1.2 A.304	WASHER 16X6X1.2 A.304	24	24	24	24	24	24	24	24	
	Q411304000	REMACHE AVIBULB Ø4,8	AVIBULB RIVET Ø4.8	2	2	2	2	2	2	2	2	
5	Z270337000	SUPLEMENTO COMPLETO	COMPLETE SUPPLEMENT	1	1	1	1	1	1	1	1	
	Q232040000	ARANDELA A6	WASHER A6	4	4	4	4	4	4	4	4	
	Q212031000	TUERCA SOMBRERETE M5	COWL NUT M5	4	4	4	4	4	4	4	4	
	Q152004000	TORNILLO APLASTADO M5x13 A304	FLAT HEADED BOLT M5x13 A304	4	4	4	4	4	4	4	4	
	Q262030000	ARANDELA GROW. A5 A.304	WASHER GROW. A5 A.304	4	4	4	4	4	4	4	4	
6	Z311807000	TAPA PREACLARADO COMPL.	COMPL. PRERINSE COVER	1	1	1	1	1	1	1	1	
	Z311806000	JUNTA	SEAL	1	1	1	1	1	1	1	1	
	Q302022000	ARANDELA 16X6X1.2 A.304	WASHER 16X6X1.2 A.304	4	4	4	4	4	4	4	4	
	Q262040000	ARANDELA GROW. A6 A.304	WASHER GROW. A6 A.304	4	4	4	4	4	4	4	4	
	Q162040000	TUERCA EXAGONAL M6	HEXAGONAL NUT M6	4	4	4	4	4	4	4	4	
7	Z312908000	SUJECION PANEL PREACLARADO	PRERINSE PANEL FAST.	2	2	2	2	2	2	2	2	
8	Z311809000	TAPON	COVER	2	2	2	2	2	2	2	2	
	Q307032000	JUNTA 32X21X3	JOINT 32X21X3	2	2	2	2	2	2	2	2	
	Q223023000	TUERCA EXAGONAL 5-8 LATON	HEX NUT 5-8 BRASS	2	2	2	2	2	2	2	2	
9	Z311821000	APOYO BANDEJA	TRAY SUPPORT	4	4	4	4	4	4	4	4	
10	Z311801000	CAJA PREACLARADO SOLDADA	WELDED PRERINSE BOX	1	1	1	1	1	1	1	1	

MOD.	LAVAVAJILLAS MODULARES MODULAR DISHWASHERS	ZONA	TUNEL DE PREACLARADO / PRERINSE TUNNEL	PLANO	C-2147

ITEM	CODIGO	DENOMINACION	TEXTO	FI-280 I ECO-280 I	FI-280 D ECO-280 D	FI-370 I ECO-370 I	FI-370 D ECO-370 D	FI-460 I ECO-460 I	FI-460 D ECO-460 D	FI-550 I ECO-550 I	FI-550 D ECO-550 D	NOTAS
11	Z310533000	AMARRE RESORTE PREACLARAD.	PRERINSE SPRING FASTENING	1	1	1	1	1	1	1	1	ELIMINA. 10.02.09
11	Z270517000	AMARRE RESORTE	SPRING FASTENING	1	1	1	1	1	1	1	1	INTROD. 10.02.09
	Q232040000	ARANDELA A6	WASHER A6	10	10	10	10	10	10	10	10	
	Q262030000	ARANDELA GROW. A5 A.304	WASHER GROW. A5 A.304	10	10	10	10	10	10	10	10	
	Q212031000	TUERCA SOMBRERETE M5	COWL NUT M5	10	10	10	10	10	10	10	10	
12	Z270513000	RESORTE FUERZA CONSTANTE	CONSTANT FORCE SPRING	1	1	1	1	1	1	1	1	
13	Z270514000	EJE RESORTE	SPRING SHAFT	1	1	1	1	1	1	1	1	
	Q352001000	PASADOR DE ALETAS 2X20	COTTER PIN 2X20	2	2	2	2	2	2	2	2	
14	Z270511000	SOPORTE RESORTE	SPRING SUPPORT	1	1	1	1	1	1	1	1	
	Q232040000	ARANDELA A6	WASHER A6	2	2	2	2	2	2	2	2	
	Q262030000	ARANDELA GROW. A5 A.304	WASHER GROW. A5 A.304	2	2	2	2	2	2	2	2	
	Q212031000	TUERCA SOMBRERETE M5	COWL NUT M5	2	2	2	2	2	2	2	2	
15	Z270512000	ENCAJE RESORTE	SPRING SOCKET	2	2	2	2	2	2	2	2	
16	Z310521000	PUERTA PREACLARADO MONTAD.	PRERINSE DOOR MOUNTED	1	1	1	1	1	1	1	1	
	Z270516000	TOPE	STOP	2	2	2	2	2	2	2	2	
	Z270531000	SUJECION PUERTA	DOOR FASTENING	1	1	1	1	1	1	1	1	
17	Z400540000	ASA PUERTA COMPLETA	COMPLETE DOOR HANDLE	1	1	1	1	1	1	1	1	
18	Z310808000	BANDEJA PREACLARADO	PRERINSE TRAY	1	1	1	1	1	1	1	1	
19	Z270336000	GUIA PUERTA	DOOR GUIDE	2	2	2	2	2	2	2	2	
	Q152045000	TORNILLO AMARRE M6X25	FASTENING BOLT M6X25	8	8	8	8	8	8	8	8	
	Q232040000	ARANDELA A6	WASHER A6	8	8	8	8	8	8	8	8	
	Q222012000	TUERCA AUTOBLOCANTE M6	SELF-LOCKING NUT M6	8	8	8	8	8	8	8	8	
20	Z312917000	APOYO PANEL DCHO.	RIGHT PANEL SUPPORT	2	_	2	_	2	_	2	_	
	Q262040000	ARANDELA GROW. A6 A.304	WASHER GROW. A6 A.304	4	_	4	_	4	_	4	_	
	Q162040000	TUERCA EXAGONAL M6	HEXAGONAL NUT M6	4	_	4	_	4	_	4	_	
21	Z100522000	INTERRUPTOR MAGNETICO AC	MAGNETIC SWITCH AC	2	2	2	2	2	2	2	2	
	Q242020000	ARANDELA ABANICO A4 A.304	FAN WASHER A4 A.304	4	4	4	4	4	4	4	4	
	Q162020000	TUERCA EXAGONAL M4	HEXAGONAL NUT M4	4	4	4	4	4	4	4	4	
22	Z312903000	PANEL LATERAL	SIDE PANEL	1	_	1	_	1	_	1	_	
23	Z332901000	PANEL FRONTAL PRELAVADO	FRONT PREWASH PANEL	1	1	1	1	1	1	1	1	
24	Z315029000	GUIA PREACLARADO POSTERIOR	REAR PRERINSE GUIDE	1	1	1	1	1	1	1	1	

MOD.	LAVAVAJILLAS MODULARES MODULAR DISHWASHERS	ZONA	TUNEL DE PREACLARADO / PRERINSE TUNNEL	PLANO	C-2147

ITEM	CODIGO	DENOMINACION	TEXTO	FI-280 I ECO-280 I	FI-280 D ECO-280 D	FI-370 I ECO-370 I	FI-370 D ECO-370 D	FI-460 I ECO-460 I	FI-460 D ECO-460 D	FI-550 I ECO-550 I	FI-550 D ECO-550 D	NOTAS
25	Z275075000	DESLIZAMIENTO GUIAS	GUIDE SLIDE	2	2	2	2	2	2	2	2	
	Q232040000	ARANDELA A6	WASHER A6	4	4	4	4	4	4	4	4	
	Q222012000	TUERCA AUTOBLOCANTE M6	SELF-LOCKING NUT M6	4	4	4	4	4	4	4	4	
26	Z315038000	GUIA PREACLARADO ANTER. IZDO.	FRONT LEFT PRERINSE GUIDE	1	_	1	_	1	_	1	_	
26	Z315027000	GUIA PREACLARADO ANTE. DCHO.	FRONT RIGHT PRERINSE GUIDE	_	1	_	1	_	1	_	1	
27	Z271211000	U SOPORTE PULSADOR	BUTTON U-SUPPORT	2	2	2	2	2	2	2	2	
	Q232040000	ARANDELA A6	WASHER A6	4	4	4	4	4	4	4	4	
	Q262030000	ARANDELA GROW. A5 A.304	WASHER GROW. A5 A.304	4	4	4	4	4	4	4	4	
	Q212031000	TUERCA SOMBRERETE M5	COWL NUT M5	4	4	4	4	4	4	4	4	
28	Z271201000	SOPORTE PULSADOR	BUTTON SUPPORT	2	2	2	2	2	2	2	2	
	Q232040000	ARANDELA A6	WASHER A6	4	4	4	4	4	4	4	4	
	Q262030000	ARANDELA GROW. A5 A.304	WASHER GROW. A5 A.304	4	4	4	4	4	4	4	4	
	Q212031000	TUERCA SOMBRERETE M5	COWL NUT M5	4	4	4	4	4	4	4	4	
29	Z311202000	PULSADOR ACLARADO IZDO.	LEFT RINSE BUTTON	1	_	1	_	1	_	1	_	
29	Z311222000	PULSADOR ACLARADO DCHO.	RIGHT RINSE BUTTON	_	1	_	1	_	1	_	1	
	Z271203000	MUELLE TORSION IZDO 27601	LEFT TORSION SPRING 27601	1	_	1	_	1	_	1	_	
	Z271204000	MUELLE TORSION DCHO 27561	RIGHT TORS.ION SPRING 27561	_	1	_	1	_	1	_	1	
30	Z271207000	IMAN	MAGNET	1	1	1	1	1	1	1	1	
	Z271206000	SOPORTE IMAN	MAGNET BRACKET	1	1	1	1	1	1	1	1	
	Q072033000	TORN.G.S. M5X20 A304	BOLT G.S. M5X20 A304	1	1	1	1	1	1	1	1	
	Q212031000	TUERCA SOMBRERETE M5	COWL NUT M5	1	1	1	1	1	1	1	1	
	Q262030000	ARANDELA GROW. A5 A.304	WASHER GROW. A5 A.304	1	1	1	1	1	1	1	1	
	Q162040000	TUERCA EXAGONAL M6	HEXAGONAL NUT M6	2	2	2	2	2	2	2	2	

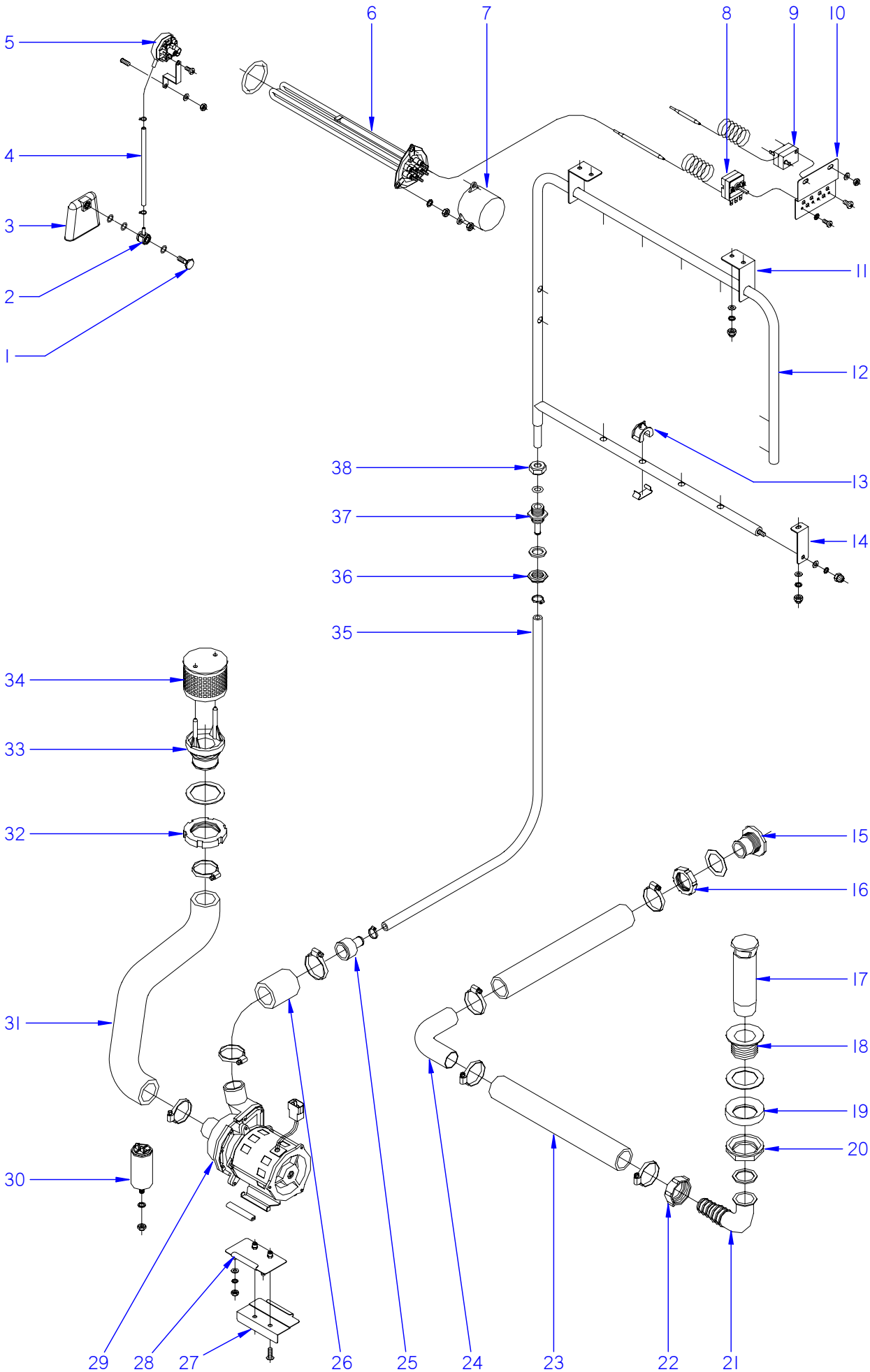

ITEM MARCADO EN COLOR = REPUESTO RECOMENDADO
COLOURED ITEM = RECOMMENDED SPARE PART

N plano	Firma	Fecha	Aparato		Lamina	
C-2148		2008-11	PARTE FUNCIONAL DE PREACLARADO	LAVAVAJILLAS MODULARES	9	Fagor Industrial S.Coop. FAGOR Oñate

MOD.	LAVAVAJILLAS MODULARES MODULAR DISHWASHERS	ZONA	PARTE FUNCIONAL DE PREACLARADO FUNCTIONAL PART OF PRERINSE	PLANO	C-2148

ITEM	CODIGO	DENOMINACION	TEXTO	FI-280 I	FI-280 D	FI-370 I	FI-370 D	FI-460 I	FI-460 D	FI-550 I	FI-550 D	NOTAS
1	Z203013000	TORNILLO PRESOSTATO	PRESSURE SWITCH BOLT	1	1	1	1	1	1	1	1	
	Q307003000	JUNTA TORICA 16.01X10.77X2.62	O-RING 16.01X10.77X2.62	2	2	2	2	2	2	2	2	
2	Z203012000	EMPALME PRESOSTATO	PRESSURE SWITCH CONNEX	1	1	1	1	1	1	1	1	
3	Z203011000	CAMARA PRESOSTATO	PRESSURE SWITCH	1	1	1	1	1	1	1	1	
4	3702400000	TUBO GOMA NEGRO D 8*4	BLACK RUBBER PIPE Ø 8*4	1	1	1	1	1	1	1	1	
	P102154000	BRIDA ELASTICA TUBO	ELASTIC PIPE FLANGE	2	2	2	2	2	2	2	2	
5	Z313006000	PRESOSTATO SIMPLE	SIMPLE PRESSURE SWITCH	1	1	1	1	1	1	1	1	
	Z602923000	SOPORTE PRESOSTATO	PRESSURE SWITCH SUPPORT	1	1	1	1	1	1	1	1	
	Q082032000	TORNILLO ALOMADO BZ-3,5X9,5	CURVED SCREW BZ-3.5x9.5	1	1	1	1	1	1	1	1	
	Q232040000	ARANDELA A6	WASHER A6	1	1	1	1	1	1	1	1	
	Q162040000	TUERCA EXAGONAL M6	HEXAGONAL NUT M6	1	1	1	1	1	1	1	1	
6	Z313601000	RESISTENCIA PREACLARADO 230V.	PRERINSE RESISTOR 230V	1	1	1	1	1	1	1	1	
	Q307044000	JUNTA TORICA Ø 67.18x56.52x5.3	O-RING Ø 67.18x56.52x5.3	1	1	1	1	1	1	1	1	
7	Z101723000	CAPERUZA RESISTENCIA	RESISTOR HOOD	1	1	1	1	1	1	1	1	
	Q163140000	TUERCA EXAGONAL M6 LATON	HEXAGONAL NUT M6 BRASS	6	6	6	6	6	6	6	6	
	Q262040000	ARANDELA GROW. A6 A.304	WASHER GROW. A6 A.304	3	3	3	3	3	3	3	3	
S/Nº	Z273073000	REGULACION TERMOSTATO 70ºC	THERMOSTAT CONTROL 70ºC	2	2	2	2	2	2	2	2	ELIMINAD. 30.11.12
S/Nº	12047243	REGULACION A 70ºC Tc 85ºC	CONTROL 70ºC Tc 85ºC	2	2	2	2	2	2	2	2	INTROD. 30.11.12
8	Z203014000	TERMOSTATO CALDERIN	WASH DRUM THERMOSTAT	1	1	1	1	1	1	1	1	ELIMINAD. 30.11.12
8	12040858	TERMOSTATO CALDERIN	WASH DRUM THERMOSTAT	1	1	1	1	1	1	1	1	INTROD. 30.11.12
9	Z276365000	TERMOSTATO 150ºC	THERMOSTAT 150ºC	1	1	1	1	1	1	1	1	
10	Z273037000	SOPORTE TERMOSTATO A.C.	A.C. THERMOSTAT SUPPORT	1	1	1	1	1	1	1	1	
11	Z311913000	SOPORTE SUPER. PREACLARADO	UPPER PRERINSE SUPPORT	2	2	2	2	2	2	2	2	
	Q262030000	ARANDELA GROW. A5 A.304	WASHER GROW. A5 A.304	4	4	4	4	4	4	4	4	
	Q212031000	TUERCA SOMBRERETE M5	COWL NUT M5	4	4	4	4	4	4	4	4	
12	Z311910000	ARBOL PREACLARADO	PRERINSE CAM	1	1	1	1	1	1	1	1	
13	Z311831000	TOBERA PREACLARADO	PRERINSE NOZZLE	12	12	12	12	12	12	12	12	
	Z400711000	ENGANCHE TOBERA LAVADO	WASH NOZZLE CATCH	12	12	12	12	12	12	12	12	
14	Z271912000	AMARRE INFERIOR ACLARADO	LOWER RINSE FASTENING	1	1	1	1	1	1	1	1	
	Q262030000	ARANDELA GROW. A5 A.304	WASHER GROW. A5 A.304	2	2	2	2	2	2	2	2	
	Q212031000	TUERCA SOMBRERETE M5	COWL NUT M5	2	2	2	2	2	2	2	2	

MOD.	LAVAVAJILLAS MODULARES MODULAR DISHWASHERS	ZONA	PARTE FUNCIONAL DE PREACLARADO FUNCTIONAL PART OF PRERINSE	PLANO	C-2148

ITEM	CODIGO	DENOMINACION	TEXTO	ECO-280 I	ECO-280 D	ECO-370 I	ECO-370 D	ECO-460 I	ECO-460 D	ECO-550 I	ECO-550 D	NOTAS
1	Z203013000	TORNILLO PRESOSTATO	PRESSURE SWITCH BOLT	1	1	1	1	1	1	1	1	
	Q307003000	JUNTA TORICA 16.01X10.77X2.62	O-RING 16.01X10.77X2.62	2	2	2	2	2	2	2	2	
2	Z203012000	EMPALME PRESOSTATO	PRESSURE SWITCH CONNEX	1	1	1	1	1	1	1	1	
3	Z203011000	CAMARA PRESOSTATO	PRESSURE SWITCH	1	1	1	1	1	1	1	1	
4	3702400000	TUBO GOMA NEGRO D 8*4	BLACK RUBBER PIPE Ø 8*4	1	1	1	1	1	1	1	1	
	P102154000	BRIDA ELASTICA TUBO	ELASTIC PIPE FLANGE	2	2	2	2	2	2	2	2	
5	Z313006000	PRESOSTATO SIMPLE	SIMPLE PRESSURE SWITCH	1	1	1	1	1	1	1	1	
	Z602923000	SOPORTE PRESOSTATO	PRESSURE SWITCH SUPPORT	1	1	1	1	1	1	1	1	
	Q082032000	TORNILLO ALOMADO BZ-3,5X9,5	CURVED SCREW BZ-3.5x9.5	1	1	1	1	1	1	1	1	
	Q232040000	ARANDELA A6	WASHER A6	1	1	1	1	1	1	1	1	
	Q162040000	TUERCA EXAGONAL M6	HEXAGONAL NUT M6	1	1	1	1	1	1	1	1	
6	Z313601000	RESISTENCIA PREACLARADO 230V.	PRERINSE RESISTOR 230V	1	1	1	1	1	1	1	1	
	Q307044000	JUNTA TORICA Ø 67.18x56.52x5.3	O-RING Ø 67.18x56.52x5.3	1	1	1	1	1	1	1	1	
7	Z101723000	CAPERUZA RESISTENCIA	RESISTOR HOOD	1	1	1	1	1	1	1	1	
	Q163140000	TUERCA EXAGONAL M6 LATON	HEXAGONAL NUT M6 BRASS	6	6	6	6	6	6	6	6	
	Q262040000	ARANDELA GROW. A6 A.304	WASHER GROW. A6 A.304	3	3	3	3	3	3	3	3	
S/Nº	Z273073000	REGULACION TERMOSTATO 70ºC	THERMOSTAT CONTROL 70ºC	1	1	1	1	1	1	1	1	ELIMINAD. 30.11.12
S/Nº	12047243	REGULACION A 70ºC Tc 85ºC	CONTROL 70ºC Tc 85ºC	1	1	1	1	1	1	1	1	INTROD. 30.11.12
9	Z276365000	TERMOSTATO 150ºC	THERMOSTAT 150ºC	1	1	1	1	1	1	1	1	
10	Z273037000	SOPORTE TERMOSTATO A.C.	A.C. THERMOSTAT SUPPORT	1	1	1	1	1	1	1	1	
11	Z311913000	SOPORTE SUPER. PREACLARADO	UPPER PRERINSE SUPPORT	2	2	2	2	2	2	2	2	
	Q262030000	ARANDELA GROW. A5 A.304	WASHER GROW. A5 A.304	4	4	4	4	4	4	4	4	
	Q212031000	TUERCA SOMBRERETE M5	COWL NUT M5	4	4	4	4	4	4	4	4	
12	Z311910000	ARBOL PREACLARADO	PRERINSE CAM	1	1	1	1	1	1	1	1	
13	Z311831000	TOBERA PREACLARADO	PRERINSE NOZZLE	12	12	12	12	12	12	12	12	
	Z400711000	ENGANCHE TOBERA LAVADO	WASH NOZZLE CATCH	12	12	12	12	12	12	12	12	
14	Z271912000	AMARRE INFERIOR ACLARADO	LOWER RINSE FASTENING	1	1	1	1	1	1	1	1	
	Q262030000	ARANDELA GROW. A5 A.304	WASHER GROW. A5 A.304	2	2	2	2	2	2	2	2	
	Q212031000	TUERCA SOMBRERETE M5	COWL NUT M5	2	2	2	2	2	2	2	2	

MOD.	LAVAVAJILLAS MODULARES MODULAR DISHWASHERS	ZONA	PARTE FUNCIONAL DE PREACLARADO FUNCTIONAL PART OF PRERINSE	PLANO	C-2148

ITEM	CODIGO	DENOMINACION	TEXTO	FI-280 I ECO-280 I	FI-280 D ECO-280 D	FI-370 I ECO-370 I	FI-370 D ECO-370 D	FI-460 I ECO-460 I	FI-460 D ECO-460 D	FI-550 I ECO-550 I	FI-550 D ECO-550 D	NOTAS
15	Z106355000	PASAMUROS	BUSHING	1	1	1	1	1	1	1	1	
	Q307011000	ARANDELA 56X39X1	WASHER 56X39X1	1	1	1	1	1	1	1	1	
16	Q228006000	TUERCA DISTRIBUIDOR	DISTRIBUTOR NUT	1	1	1	1	1	1	1	1	
17	Z652101000	ALIVIADERO	OVERFLOW	1	1	1	1	1	1	1	1	
18	Z102104000	VALVULA DESAGUE	DRAINAGE VALVE	1	1	1	1	1	1	1	1	
	Q307009000	ARANDELA 70X48X1.5	WASHER 70X48X1.5	1	1	1	1	1	1	1	1	
19	Q307026000	JUNTA ESPECIAL 2012592	SPECIAL JOINT 2012592	1	1	1	1	1	1	1	1	
20	Z702101000	TUERCA R.11/2 DELRIN	R.11/2 DELRIN NUT	1	1	1	1	1	1	1	1	
	Q307027000	JUNTA 45X35X2	JOINT 45X35X2	1	1	1	1	1	1	1	1	
21	Z602101000	CODO DESAGUE	DRAINAGE L-BEND	1	1	1	1	1	1	1	1	
22	Z602102000	TUERCA	NUT	1	1	1	1	1	1	1	1	
23	Z310912000	MANGUERA COMUNICACION	COMMUNICATION HOSE	2	2	2	2	2	2	2	2	
	Q881307000	ABRAZADERA 40-60	CLAMP 40-60	4	4	4	4	4	4	4	4	
24	Z310932000	CODO EMPALME	CONNECTION ELBOW	1	1	1	1	1	1	1	1	
25	Z162312000	REDUCCION	REDUCTION	1	1	1	1	1	1	1	1	
26	Z162301000	CONDUCTO ASPIRAC. IMPULSION	EXTRACTOR PIPE. IMPULSE	1	1	1	1	1	1	1	1	
	Q881307000	ABRAZADERA 40-60	CLAMP 40-60	2	2	2	2	2	2	2	2	
27	Z162315000	SOPORTE MOTOBOMBA COMPL.	COMPL. MOTOR PUMP SUPPORT	1	1	1	1	1	1	1	1	
28	Z162313000	AMARRE MOTOBOMBA COMPLET.	COMPL. MOTOR PUMP FASTENI	1	1	1	1	1	1	1	1	
	Q152004000	TORNILLO APLASTADO M5x13 A304	FLAT HEADED BOLT M5x13 A304	2	2	2	2	2	2	2	2	
	Q262040000	ARANDELA GROW. A6 A.304	WASHER GROW. A6 A.304	3	3	3	3	3	3	3	3	
	Q012042000	TORNILLO EXAGONAL M6X15	HEXAGONAL BOLT M6x15	2	2	2	2	2	2	2	2	
	Q232040000	ARANDELA A6	WASHER A6	3	3	3	3	3	3	3	3	
	Q162040000	TUERCA EXAGONAL M6	HEXAGONAL NUT M6	2	2	2	2	2	2	2	2	
	Q302022000	ARANDELA 16X6X1.2 A.304	WASHER 16X6X1.2 A.304	2	2	2	2	2	2	2	2	
	Q221343000	REMACHE EXAGONAL M6	HEXAGONAL RIVET M6	2	2	2	2	2	2	2	2	
29	Z401001000	BOMBA LAVADO	WASH PUMP	1	1	1	1	1	1	1	1	
	Z281112000	PROTECTOR MOTOBOMBA	MOTOR PUMP GUARD	1	1	1	1	1	1	1	1	
	3701700000	PERFIL GOMA U 9*4	RUBBER PROFILE U 9*4	2	2	2	2	2	2	2	2	
30	V817100000	CONDENSADOR 6 M.F.	CONDENSER 6 M.F.	1	1	1	1	1	1	1	1	

MOD.	LAVAVAJILLAS MODULARES MODULAR DISHWASHERS	ZONA	PARTE FUNCIONAL DE PREACLARADO FUNCTIONAL PART OF PRERINSE	PLANO	C-2148

ITEM	CODIGO	DENOMINACION	TEXTO	FI-280 I ECO-280 I	FI-280 D ECO-280 D	FI-370 I ECO-370 I	FI-370 D ECO-370 D	FI-460 I ECO-460 I	FI-460 D ECO-460 D	FI-550 I ECO-550 I	FI-550 D ECO-550 D	NOTAS
31	Z310911000	CONDUCTO ASPIRAC. PREACL. IZ	PRERINSE INTAKE PIPE LEFT	1	_	1	_	1	_	1	_	
31	Z310931000	CONDUCTO ASPIRAC. PREACL. D,	PRERINSE INTAKE PIPE RIGHT	_	1	_	1	_	1	_	1	
	Q881324000	ABRAZADERA 50-70L	CLAMP 50-70L	2	2	2	2	2	2	2	2	
32	Q228005000	TUERCA RANURADA M49X2.5	GROOVED NUT M49X2.5	1	1	1	1	1	1	1	1	
	Q307009000	ARANDELA 70X48X1.5	WASHER 70X48X1.5	1	1	1	1	1	1	1	1	
33	Z600905000	PASAMUROS ASPIRACION	EXTRACTOR BUSHING	1	1	1	1	1	1	1	1	
34	Z600906000	FILTRO	FILTER	1	1	1	1	1	1	1	1	
35	3715300000	TUBO GOMA 14x24	RUBBER PIPE 14x24	1	1	1	1	1	1	1	1	
	Q881336000	ABRAZADERA 16-27	CLAMP 16-27	2	2	2	2	2	2	2	2	
36	Q223023000	TUERCA EXAGONAL 5-8 LATON	HEX NUT 5-8 BRASS	1	1	1	1	1	1	1	1	
	Q307032000	JUNTA Ø32X21X3	JOINT Ø32X21X3	1	1	1	1	1	1	1	1	
37	Z281901000	PASAMUROS ACLARADO	RINSE BUSHING	1	1	1	1	1	1	1	1	
38	Q223108000	TUERCA M.24X2.5	NUT M.24X2.5	1	1	1	1	1	1	1	1	
	Q307063000	JUNTA TORICA 12.29X19.35X3.53	O-RING 12.29X19.35X3.53	1	1	1	1	1	1	1	1	

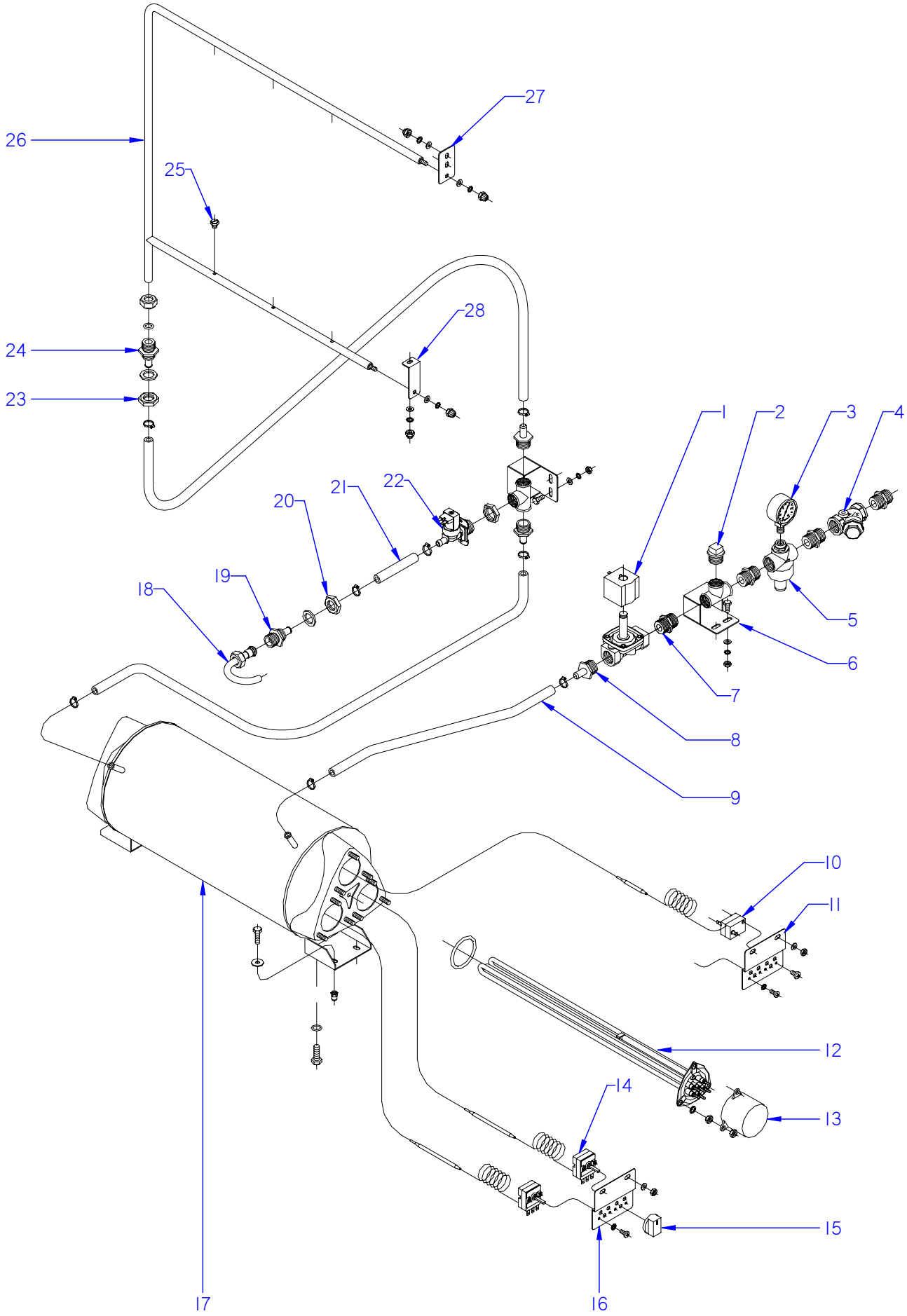

ITEM MARCADO EN COLOR = REPUESTO RECOMENDADO
COLOURED ITEM = RECOMMENDED SPARE PART

N plano	Firma	Fecha	Aparato		Lamina	
C-2149		2008-11	PARTE FUNCIONAL DE ACLARADO LAVAVAJILLAS MODULARES FI		10	Fagor Industrial S.Coop. FAGOR Oñate

MOD.	LAVAVAJILLAS MODULARES MODULAR DISHWASHERS	ZONA	PARTE FUNCIONAL DE ACLARADO FUNCTIONAL PART OF RINSE	PLANO	C-2149

ITEM	CODIGO	DENOMINACION	TEXTO	FI-280	FI-370	FI-460	FI-550				NOTAS
1	Z102322000	ELECTROV. 3/4"-240V. MONTADA	SOLENOID 3/4"-240V. MOUNTED	1	1	1	1				
2	Z311103000	TAPON 3/4"	LID 3/4"	1	1	1	1				
3	Z102316000	MANOMETRO	MANOMETER	1	1	1	1				
4	Z102308000	FILTRO 3/4	FILTER 3/4"	1	1	1	1				
5	Z102307000	REDUCTOR PRESION	PRESSURE REDUCER	1	1	1	1				
6	Z311101000	TE COMPLETO	COMPLETE T	2	2	2	2				
	Q012042000	TORNILLO EXAGONAL M6X15	HEXAGONAL BOLT M6x15	3	3	3	3				
	Q262040000	ARANDELA GROW. A6 A.304	WASHER GROW. A6 A.304	3	3	3	3				
	Q302022000	ARANDELA 16X6X1.2 A.304	WASHER 16X6X1.2 A.304	6	6	6	6				
	Q162040000	TUERCA EXAGONAL M6	HEXAGONAL NUT M6	1	1	1	1				
	Q221343000	REMACHE EXAGONAL M6	HEXAGONAL RIVET M6	2	2	2	2				
7	Z102301000	MANGUITO 3/4"	HOSE 3/4"	4	4	4	4				
8	Z102309000	EMPALME 3-4	CONNECTION 3-4'	3	3	3	3				
9	3676900000	TUBO GOMA NEGRA Ø 17*10	BLACK RUBBER PIPE 17*10	3	3	3	3				
10	Z276365000	TERMOSTATO 150ºC	THERMOSTAT 150ºC	1	1	1	1				
	Q152024000	TORNILLO AVELLANADO M4X8	COUNTERSUNK BOLT M4x8	2	2	2	2				
11	Z273037000	SOPORTE TERMOST. A.C.	A.C. THERMOSTAT SUPPORT	1	1	1	1				
	Q232040000	ARANDELA A6	WASHER A6	4	4	4	4				
	Q162040000	TUERCA EXAGONAL M6	HEXAGONAL NUT M6	4	4	4	4				
12	Z121741000	RESISTENCIA 230 V.	RESISTOR 230 V.	3	3	_	_				
12	Z129502000	RESISTENCIA 220-240 V.	RESISTOR 220-240 V.	_	_	3	3				
	Q307044000	JUNTA TORICA Ø 67.18x56.52x5.3	O-RING Ø 67.18x56.52x5.3	1	1	1	1				
13	Z101723000	CAPERUZA RESISTENCIA	RESISTOR HOOD	3	3	3	3				
	Q221305000	TUERCA EXAG. AUTO M4 ZINCADA	HEXAG. SCREW AUTO M4 ZINC-	18	18	18	18				
14	Z203014000	TERMOSTATO CALDERIN	WASH DRUM THERMOSTAT	2	2	2	2				ELIMINADO 30.11.2012
14	12040858	TERMOSTATO CALDERIN	WASH DRUM THERMOSTAT	2	2	2	2				INTRODUCIDO 30.11.2012
	Q152024000	TORNILLO AVELLANADO M4X8	COUNTERSUNK BOLT M4x8	4	4	4	4				
15	Z203069000	BOTON DE MANDO	CONTROL BUTTON	1	1	1	1				
16	Z273037000	SOPORTE TERMOST. A.C.	A.C. THERMOSTAT SUPPORT	1	1	1	1				
	Q232040000	ARANDELA A6	WASHER A6	4	4	4	4				
	Q162040000	TUERCA EXAGONAL M6	HEXAGONAL NUT M6	4	4	4	4				

MOD.	LAVAVAJILLAS MODULARES MODULAR DISHWASHERS	ZONA	PARTE FUNCIONAL DE ACLARADO FUNCTIONAL PART OF RINSE	PLANO	C-2149

ITEM	CODIGO	DENOMINACION	TEXTO	FI-280	FI-370	FI-460	FI-550				NOTAS
17	Z311701000	CALDERIN	BOILER	1	1	1	1				
	Q262040000	ARANDELA GROW. A6 A.304	WASHER GROW. A6 A.304	13	13	13	13				
	Q162040000	TUERCA EXAGONAL M6	HEXAGONAL NUT M6	18	18	18	18				
18	Z331101000	CONDUCTO LLENADO COMPLETO	COMPLETE FILLER PIPE	1	1	1	1				
	Q223106000	TUERCA UNION	UNION NUT	1	1	1	1				
19	Z821910000	PASAMUROS ACLARADO COMPL.	COMPL. RINSE BUSHING	1	1	1	1				
	Q307032000	JUNTA 32X21X3	JOINT 32X21X3	1	1	1	1				
20	Q223023000	TUERCA EXAGONAL LATON	HEXAGONAL BRASS NUT	1	1	1	1				
21	3676900000	TUBO GOMA NEGRA Ø 17*10	BLACK RUBBER PIPE 17*10	3	3	3	3				
22	Z701135000	ELECTRO. SIMP.220V COD.255.208	ELECTRO. SIMP.220V COD.255.2	1	1	1	_				
22	P255001000	ELECTROVALVULA DOBLE	DOUBLE SOLENOID VALVE	_	_	_	1				
	Z601156000	REGULADOR 8L RO. 254.034	REGULATOR 8L RED 254.034	_	_	_	2				ELIMINADO 11.11.2013
	12096626	REGULADOR 8 L AZUL	REGULATOR 8L BLUE	_	_	_	2				INTRODUCIDO 11.11.2013
	Q221324000	TUERCA 3/4 GAS	NUT 3/4 GAS	1	1	1	1				
23	Q223023000	TUERCA EXAGONAL 5-8 LATON	HEX NUT 5-8 BRASS	1	1	1	1				
	Q307032000	JUNTA 32X21X3	JOINT 32X21X3	1	1	1	1				
24	Z271901000	PASAMUROS ACLARADO	RINSE BUSHING	1	1	1	1				
	Q307063000	JUNTA TORICA 12.29X19.35X3.53	O-RING 12.29X19.35X3.53	1	1	1	1				
	Q223108000	TUERCA M.24X2.5	NUT M.24X2.5	1	1	1	1				
25	Z211903000	TOBERA ACLARADO	RINSE NOZZLE	8	8	8	8				
26	Z351901000	ARBOL DE ACLARADO	RINSE CAM	1	1	1	1				
27	Z311917000	SOPORTE SUPERIOR ACLARADO	UPPER RINSE SUPPORT	1	1	1	1				
28	Z271912000	AMARRE INFERIOR ACLARADO	LOWER RINSE FASTENING	1	1	1	1				

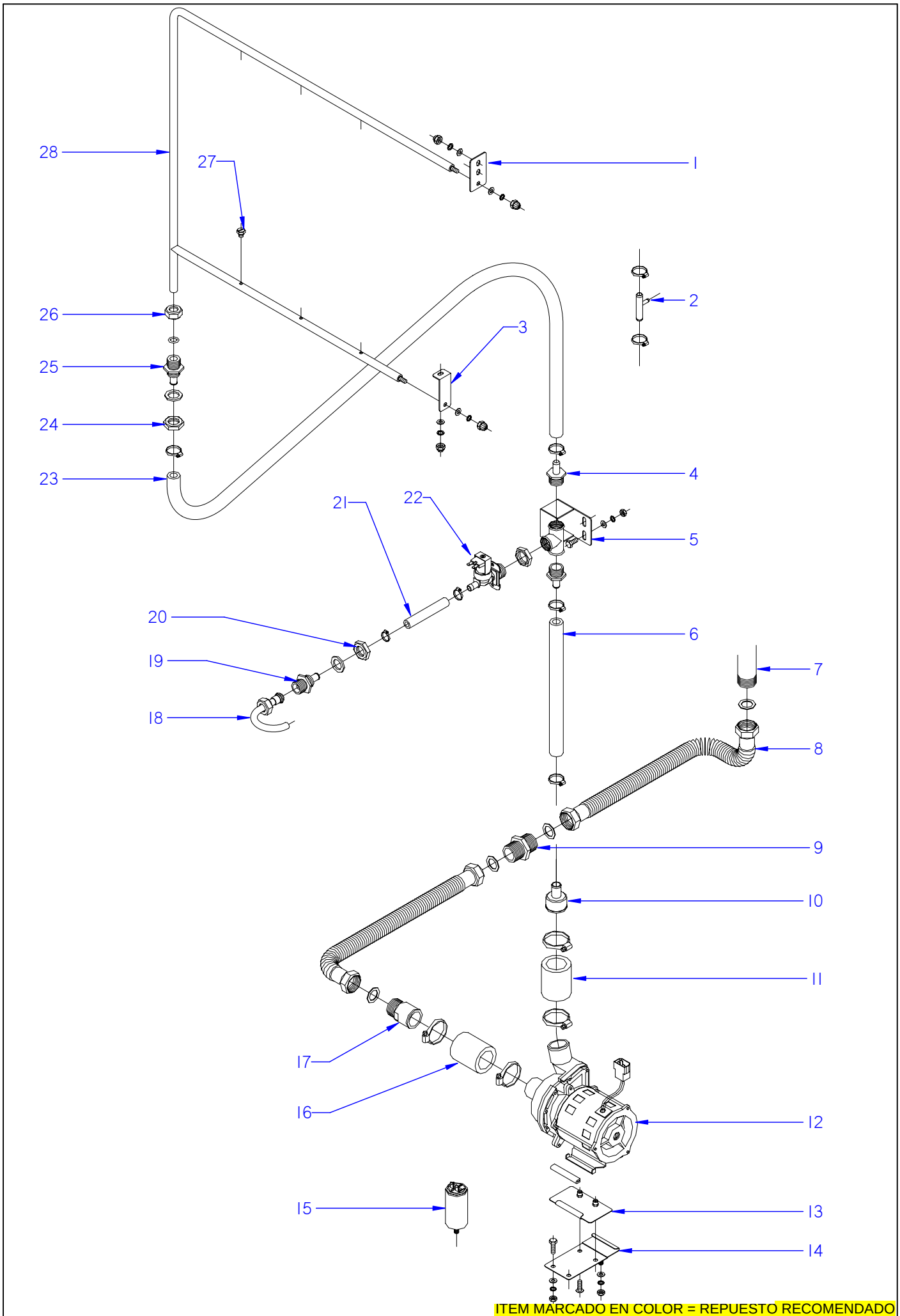

ITEM MARCADO EN COLOR = REPUESTO RECOMENDADO
COLOURED ITEM = RECOMMENDED SPARE PART

N plano	Firma	Fecha	Aparato		Lamina	
C-2150		2008-11	PARTE FUNCIONAL DE ACLARADO LAVAVAJILLAS MODULARES ECO		11	Fagor Industrial S.Coop. FAGOR Oñate

MOD.	LAVAVAJILLAS MODULARES MODULAR DISHWASHERS	ZONA	PARTE FUNCIONAL DE ACLARADO FUNCTIONAL PART OF RINSE	PLANO	C-2150

ITEM	CODIGO	DENOMINACION	TEXTO	ECO-280	ECO-370	ECO-460	ECO-550				NOTAS
1	Z311917000	SOPORTE SUPERIOR ACLARADO	UPPER RINSE SUPPORT	1	1	1	1				
2	Z162308000	TOMA PRESION	PRESSURE INTAKE	1	1	1	1				
	Q881302000	ABRAZADERA 12*20	CLAMP 12*20	2	2	2	2				
3	Z271912000	AMARRE INFERIOR ACLARADO	LOWER RINSE FASTENING	1	1	1	1				
4	Z102309000	EMPALME 3-4	CONNECTION 3-4'	2	2	2	2				
5	Z311101000	TE COMPLETO	COMPLETE T	1	1	1	1				
	Q012042000	TORNILLO EXAGONAL M6X15	HEXAGONAL BOLT M6x15	2	2	2	2				
	Q262040000	ARANDELA GROW. A6 A.304	WASHER GROW. A6 A.304	2	2	2	2				
	Q302022000	ARANDELA 16X6X1.2 A.304	WASHER 16X6X1.2 A.304	2	2	2	2				
	Q162040000	TUERCA EXAGONAL M6	HEXAGONAL NUT M6	2	2	2	2				
	Q221343000	REMACHE EXAGONAL M6	HEXAGONAL RIVET M6	2	2	2	2				
6	3715300000	TUBO GOMA 14x24	RUBBER PIPE 14x24	1	1	1	1				
	Q881336000	ABRAZADERA 16-27	CLAMP 16-27	2	2	2	2				
7		SALIDA DE GENERADOR	GENERATOR OUTPUT	1	1	1	1				
8	Z951101000	TUBO CORRUGADO	CORRUGATED PIPE	2	2	2	2				
	Q306038000	ARANDELA JUNATA Ø31X21X1.5	WASHER SEAL Ø31X21X1.5	4	4	4	4				
9	Z162306000	MANGUITO DOBLE ROSCA LATON 1	DOUBLE HOSE BRASS THREAD	1	1	1	1				
10	Z162312000	REDUCCION	REDUCTION	1	1	1	1				
11	Z162301000	CONDUCTO ASPIRAC. IMPULSION	EXTRACTOR PIPE. IMPULSE	1	1	1	1				
	Q881307000	ABRAZADERA 40-60	CLAMP 40-60	2	2	2	2				
12	Z401001000	BOMBA LAVADO	WASH PUMP	1	1	1	1				
	Z281112000	PROTECTOR MOTOBOMBA	MOTOR PUMP GUARD	1	1	1	1				
	3701700000	PERFIL GOMA U 9*4	RUBBER PROFILE U 9*4	2	2	2	2				
13	Z162313000	AMARRE MOTOBOMBA COMPLET.	COMPL. MOTOR PUMP FASTENI	1	1	1	1				
	Q152004000	TORNILLO APLASTADO M5x13 A304	FLAT HEADED BOLT M5x13 A304	2	2	2	2				
14	Z162315000	SOPORTE MOTOBOMBA COMPL.	COMPL. MOTOR PUMP SUPPOR	1	1	1	1				
	Q012042000	TORNILLO EXAGONAL M6X15	HEXAGONAL BOLT M6x15	2	2	2	2				
	Q302022000	ARANDELA 16X6X1.2 A.304	WASHER 16X6X1.2 A.304	2	2	2	2				
	Q262040000	ARANDELA GROW. A6 A.304	WASHER GROW. A6 A.304	3	3	3	3				
	Q162040000	TUERCA EXAGONAL M6	HEXAGONAL NUT M6	2	2	2	2				
15	V817100000	CONDENSADOR 6 M.F.	CONDENSER 6 M.F.	1	1	1	1				

MOD.	LAVAVAJILLAS MODULARES MODULAR DISHWASHERS	ZONA	PARTE FUNCIONAL DE ACLARADO FUNCTIONAL PART OF RINSE	PLANO	C-2150

ITEM	CODIGO	DENOMINACION	TEXTO	ECO-280	ECO-370	ECO-460	ECO-550				NOTAS
16	Z162301000	CONDUCTO ASPIRAC. IMPULSION	EXTRACTOR PIPE. IMPULSE	1	1	1	1				
	Q881307000	ABRAZADERA 40-60	CLAMP 40-60	2	2	2	2				
17	Z701102000	MANGUITO	HOSE	1	1	1	1				
18	Z331101000	CONDUCTO LLENADO COMPLETO	COMPLETE FILLER PIPE	1	1	1	1				
	Q223106000	TUERCA UNION	UNION NUT	1	1	1	1				
19	Z821910000	PASAMUROS ACLARADO COMPL.	COMPL. RINSE BUSHING	1	1	1	1				
	Q307032000	JUNTA 32X21X3	JOINT 32X21X3	1	1	1	1				
20	Q223023000	TUERCA EXAGONAL LATON	HEXAGONAL BRASS NUT	1	1	1	1				
21	3676900000	TUBO GOMA NEGRA Ø 17*10	BLACK RUBBER PIPE 17*10	1	1	1	1				
	Q881302000	ABRAZADERA 12*20	CLAMP 12*20	2	2	2	2				
22	Z701135000	ELECTRO. SIMP.220V COD.255.208	ELECTRO. SIMP.220V COD.255.2	1	1	1	_				
22	P255001000	ELECTROVALVULA DOBLE	DOUBLE SOLENOID VALVE	_	_	_	1				
	Z601156000	REGULADOR 8L RO. 254.034	REGULATOR 8L RED 254.034	_	_	_	2				ELIMINADO 11.11.2013
	12096626	REGULADOR 8 L AZUL	REGULATOR 8L BLUE	_	_	_	2				INTRODUCIDO 11.11.2013
	Q221324000	TUERCA 3/4 GAS	NUT 3/4 GAS	1	1	1	1				
23	3715300000	TUBO GOMA 14x24	RUBBER PIPE 14x24	1	1	1	1				
	Q881336000	ABRAZADERA 16-27	CLAMP 16-27	2	2	2	2				
24	Q223023000	TUERCA EXAGONAL 5-8 LATON	HEX NUT 5-8 BRASS	1	1	1	1				
	Q307032000	JUNTA 32X21X3	JOINT 32X21X3	1	1	1	1				
25	Z281901000	PASAMUROS ACLARADO	RINSE BUSHING	1	1	1	1				
	Q307063000	JUNTA TORICA 12.29X19.35X3.53	O-RING 12.29X19.35X3.53	1	1	1	1				
26	Q223108000	TUERCA M.24X2.5	NUT M.24X2.5	1	1	1	1				
27	Z211903000	TOBERA ACLARADO	RINSE NOZZLE	8	8	8	8				
28	Z351901000	ARBOL DE ACLARADO	RINSE CAM	1	1	1	1				

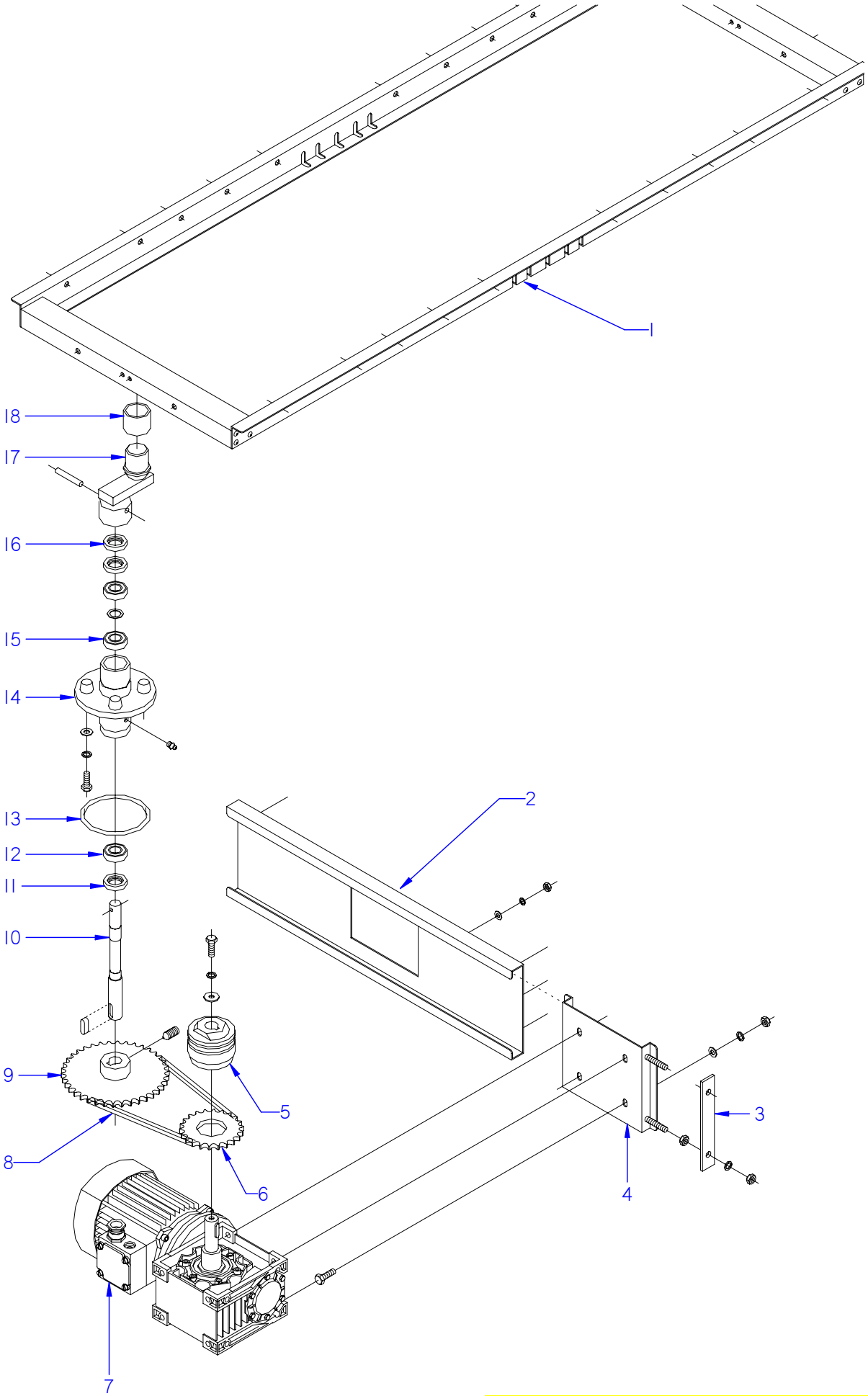

ITEM MARCADO EN COLOR = REPUESTO RECOMENDADO
COLOURED ITEM = RECOMMENDED SPARE PART

N plano	Firma	Fecha	Aparato		Lamina	
C-2151		2008-11	SISTEMA DE ARRASTRE LAVAVAJILLAS MODULARES		12	Fagor Industrial S.Coop. Oñate

MOD.	LAVAVAJILLAS MODULARES MODULAR DISHWASHERS	ZONA	SISTEMA DE ARRASTRE / SWEEP ZONE	PLANO	C-2151

ITEM	CODIGO	DENOMINACION	TEXTO	FI-280 ECO-280	FI-370 ECO-370	FI-460 ECO-460	FI-550 ECO-550				NOTAS
1	Z315021000	SOPORTE UÑAS DE LAVADO	WASH CLAW SUPPORT	1	1	1	1				
2	Z315004000	GUIA MOTORREDUCTOR COMPLET	COMPLETE GEARED MOTOR GU	1	1	1	1				
	Q262040000	ARANDELA GROW. A6 A.304	WASHER GROW. A6 A.304	9	9	9	9				
	Q162040000	TUERCA EXAGONAL M6	HEXAGONAL NUT M6	9	9	9	9				
	Q302022000	ARANDELA 16X6X1.2 A.304	WASHER 16X6X1.2 A.304	9	9	9	9				
3	Z275006000	TENSOR	TENSIONER	1	1	1	1				
	Q162050000	TUERCA EXAGONAL M8x1 INOX.	HEXAGONAL NUT M8x1 INOX.	2	2	2	2				
	Q262050000	ARANDELA GROW. A8 A.304	WASHER GROW. A8 A.304	2	2	2	2				
4	Z315002000	SOPORTE MOTORREDUCTOR	GEARED MOTOR SUPPORT	1	1	1	1				ELIMINADO 04.12.13
4	12103552	SOPORTE MOTORREDUCTOR COM	COM. GEARED MOTOR SUPPOR	1	1	1	1				INTRODUCIDO 04.12.13
	Q012053000	TORNILLO EXAGONAL M8X20	HEXAGONAL BOLT M8x20	4	4	4	4				
	Q262050000	ARANDELA GROW. A8 A.304	WASHER GROW. A8 A.304	4	4	4	4				
	Q162050000	TUERCA EXAGONAL M8x1 INOX.	HEXAGONAL NUT M8x1 INOX.	4	4	4	4				
5	Z105008000	LIMITADOR DE PAR LS 70	TORQUE LIMITER LS 70	1	1	1	1				
6	Z105009000	CORONA	CROWN	1	1	1	1				
6	Z104104000	CORONA 60 Hz,	CROWN 60 Hz,	1	1	1	1				
7	Z315001000	MOTORREDUCTOR SIN-FIN MONTA	WORM GEAR MOTOR MOUNTED	1	1	1	1				
8	Z275008000	CADENA IRIS 12.7X7.95X730	IRIS CHAIN 12.7x7.95x730	1	1	1	1				
	Z105012000	ENGANCHE CADENA SIMPLE	SIMPLE CHAIN FASTENER	1	1	1	1				
9	Z275007000	PIÑON Z=26	PINION Z=26	1	_	_	_				
9	Z335021000	PIÑON Z=19	PINION Z=19	_	1	_	_				
9	Z355021000	PIÑON Z=15	PINION Z=15	_	_	1	_				
9	Z375001000	PIÑON Z=13	PINION Z=13	_	_	_	1				
	Z105051000	VARILLA ROSCADA M. 8X16	THREADED ROD M-8x16	1	1	1	1				
10	Z315011000	EJE	SHAFT	1	1	1	1				
	Z105014000	CHAVETA 25X6X6	COTTER PIN 25X6X6	1	1	1	1				
11	Z105016000	RETEN RADIAL 20x35x7	RADIAL SEAL 20x35x7	1	1	1	1				
12	Z105017000	RODAMIENTO 6003-2RS	BEARING 6003 - 2RS	1	1	1	1				
13	Q307045000	JUNTA TORICA 105.28x94.62	"O" RING 105.28x94.62	1	1	1	1				

MOD.	LAVAVAJILLAS MODULARES MODULAR DISHWASHERS	ZONA	SISTEMA DE ARRASTRE / SWEEP ZONE	PLANO	C-2151

ITEM	CODIGO	DENOMINACION	TEXTO	FI-280 ECO-280	FI-370 ECO-370	FI-460 ECO-460	FI-550 ECO-550				NOTAS
14	Z105021000	SOPORTE RODAMIENTOS	BEARING SUPPORT	1	1	1	1				
	Q012053000	TORNILLO EXAGONAL M8X20	HEXAGONAL BOLT M8x20	4	4	4	4				
	Q262050000	ARANDELA GROW. A8 A.304	WASHER GROW. A8 A.304	4	4	4	4				
	Q262050000	ARANDELA GROW. A8 A.304	WASHER GROW. A8 A.304	4	4	4	4				
15	Z105017000	RODAMIENTO 6003-2RS	BEARING 6003 - 2RS	2	2	2	2				
	Z105019000	ARANDELA SEPARACION	SPACER WASHER	1	1	1	1				
16	Z105016000	RETEN RADIAL 20x35x7	RADIAL SEAL 20x35x7	2	2	2	2				
17	Z275025000	BULON ARRASTRE	DRIVE BOLT	1	1	1	1				
	Q362000000	PASADOR INOX.6,3x50	PIN INOX.6.3x50	1	1	1	1				
18	Z105027000	CASQUILLO	BUSHING	1	1	1	1				

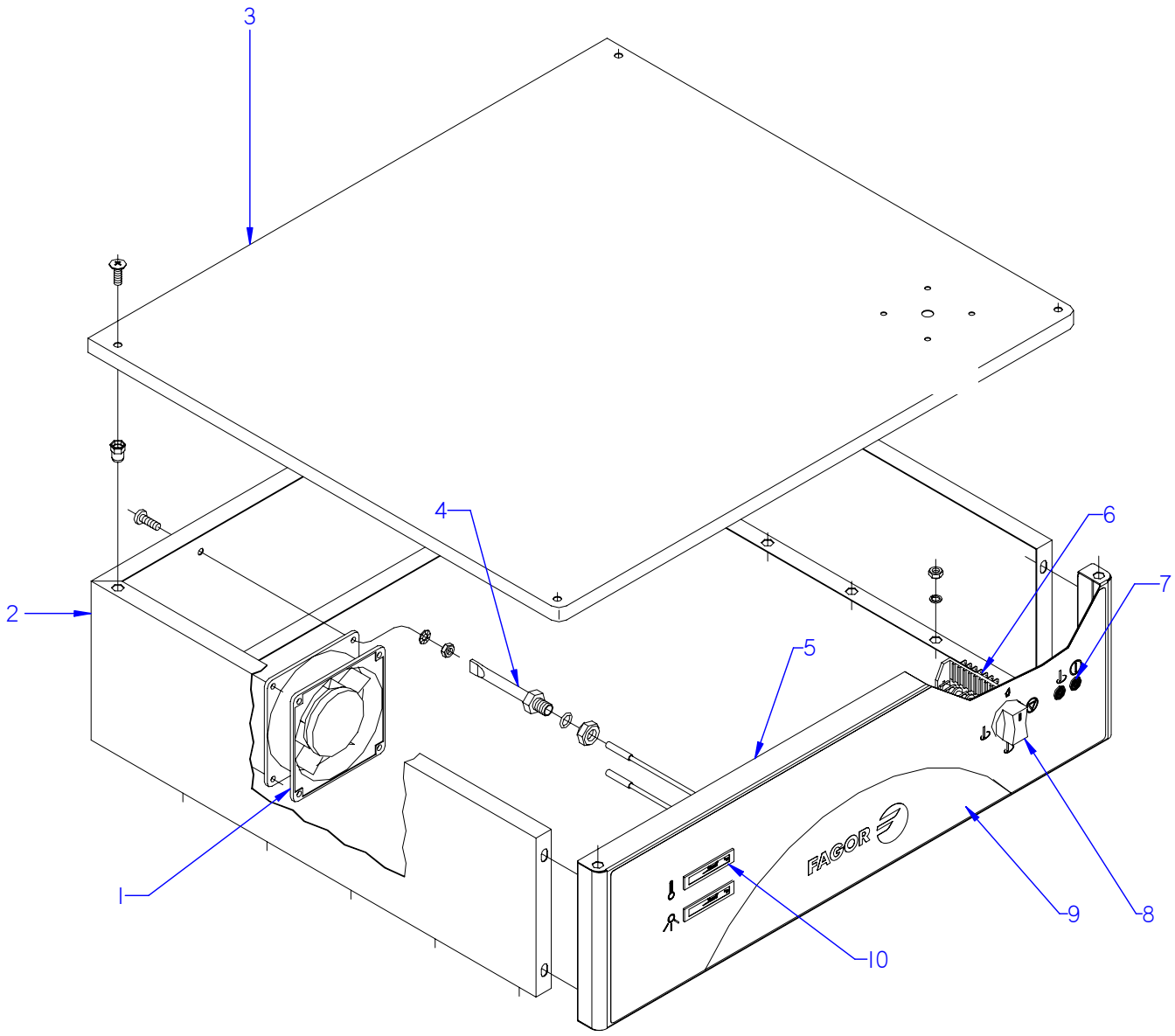

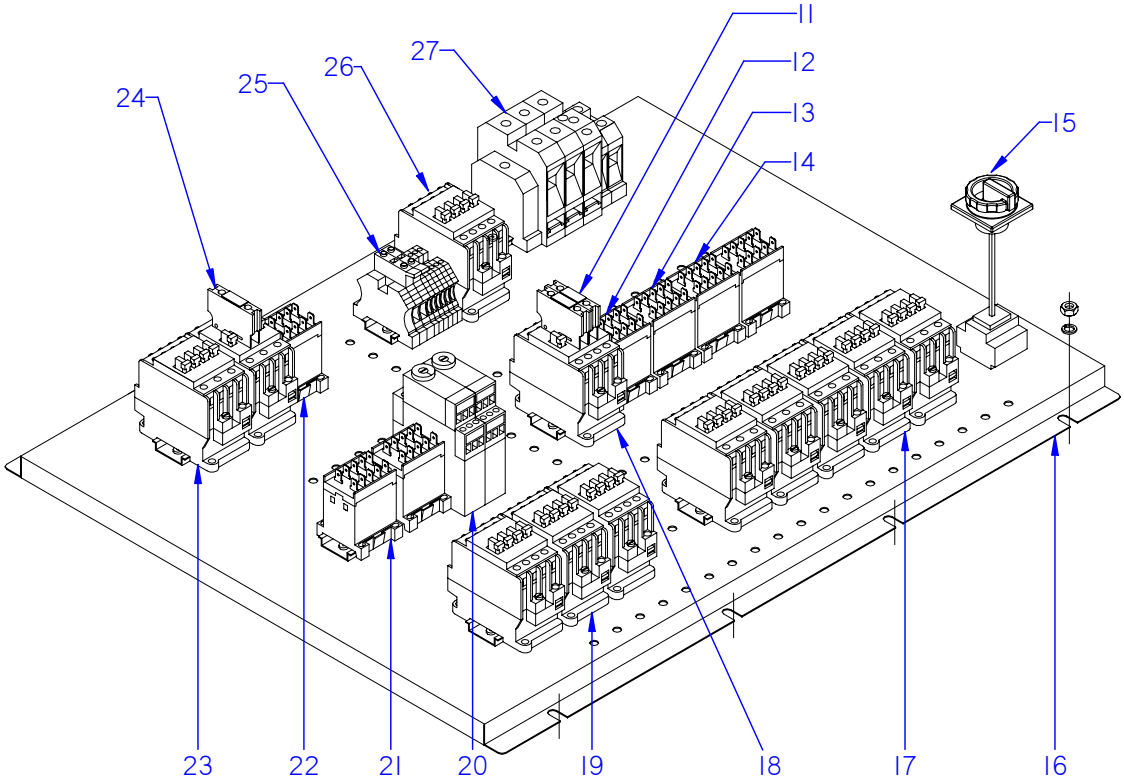

ITEM MARCADO EN COLOR = REPUESTO RECOMENDADO
COLOURED ITEM = RECOMMENDED SPARE PART

N plano	Firma	Fecha	Aparato	Lamina	
C-2152		2008-11	CONJUNTO FUNCIONAL ELECTRICO LAVAVAJILLAS MODULARES	13	Fagor Industrial S.Coop. FAGOR Onate

MOD.	LAVAVAJILLAS MODULARES MODULAR DISHWASHERS	ZONA	CONJUNTO FUNCIONAL ELECTRICO FUNCTIONAL ELECTRIC UNIT	PLANO	C-2152

ITEM	CODIGO	DENOMINACION	TEXTO	FI-280 ECO-280	FI-370 ECO-370	FI-460 I ECO-460 I	FI-550 D ECO-550 D				NOTAS
1	Z103066000	VENTILADOR 230V.50-60HZ	FAN 230V.50-60HZ	1	1	1	1				
	Q031322000	TORNILLO ALOMADO M4X15	CURVED SCREW M4X15	4	4	4	4				
	Q242020000	ARANDELA GROW. A4 A.304	WASHER GROW. A4 A.304	4	4	4	4				
	Q162020000	TUERCA EXAGONAL M4	HEXAGONAL NUT M4	4	4	4	4				
2	Z313043000	CUBIERTA CUADRO ELECTRICO	ELECTRIC PANEL COVER	1	1	1	1				ELIMINADO 01.12.09
2	Z313089000	CUBIERTA CUADRO ELECTRICO	ELECTRIC PANEL COVER	1	1	1	1				ELIMINADO 25.10.13
2	12096569	CUBIERTA CUADRO ELECT. COMP.	COMP. ELECTR. PANEL COVER	1	1	1	1				INTRODUCIDO 25.10.13
3	Z313048000	TAPA CUADRO ELECTRICO	ELECTRIC PANEL COVER	1	1	1	1				ELIMINADO 01.12.09
3	Z313093000	TAPA CUADRO ELECTRICO	ELECTRIC PANEL COVER	1	1	1	1				INTRODUCIDO 01.12.09
	Q152017000	TORNILLO AMARRE M6X13 A304	FASTENING BOLT M6X13 A304	4	4	4	4				
4	Z263002000	VAINA INDICADOR COMPLETA	COMPLETE INDICATOR SHELL	1	1	1	1				
	Q307048000	JUNTA TORICA 9,128x16,18x3,53	O-RING 9.128x16.18x3.53	1	1	1	1				
	Q162070000	TUERCA EXAGONAL M12	HEXAGONAL NUT M12	1	1	1	1				
5	Z313085000	FRENTE CUADRO ELECTRICO	ELECTRIC PANEL FRONT	1	1	1	1				ELIMINADO 01.12.09
5	Z273075000	FRENTE CUADRO ELECTRICO	ELECTRIC PANEL FRONT	1	1	1	1				INTRODUCIDO 01.12.09
6	Z273005000	COMMUTADOR DE FUNCIONES	FUNCTIONS SWITCH	1	1	1	1				
	Z602906000	CASQUILLO	BUSHING	2	2	2	2				
7	Z313080000	PILOTO AMBAR Ø18	AMBAR PILOT LIGHT Ø18	2	2	2	2				ELIMINADO 01.02.2013
7	12024254	PILOTO AMBAR 41227000A4	AMBAR PILOT 41227000A4	2	2	2	2				INTRODUCIDO 01.02.2013
8	Z203069000	BOTON DE MANDO	CONTROL BUTTON	1	1	1	1				
9	Z313078000	EMBELLECEDOR ADHESIVO FI-	ADHESIVE TRIM FI-	1	1	1	1				MOD.FI ELIMINA. 01.12.09
9	Z313079000	EMBELLECEDOR ADHESIVO FI-	ADHESIVE TRIM FI-	1	1	1	1				MOD.FI INTROD. 01.12.09
9	Z323021000	EMBELLECEDOR ADHESIVO ECO	ADHESIVE TRIM ECO	1	1	1	1				M.ECO ELIMINA. 01.12.09
9	Z323022000	EMBELLECEDOR ADHESIVO ECO	ADHESIVE TRIM ECO	1	1	1	1				M.ECO INTROD. 01.12.09
10	Z203072000	INDICADOR ANALOGICO RECT.	RECT. ANALOGUE DISPLAY	2	2	2	2				ELIMINADO 01.12.09
10	Z513023000	INDICADOR ANALOGICO	RECT. ANALOGUE DISPLAY	2	2	2	2				MOD.FI INTROD. 01.12.09
10	Z513023000	INDICADOR ANALOGICO	RECT. ANALOGUE DISPLAY	1	1	1	1				M.ECO INTROD. 01.12.09
11	Z953046000	CONTACTO AUXIL. 3RH1911-2FA11	AUX. CONTACT 3RH1911-2FA11	1	1	1	1				
12	Z213007000	CONTACTOR 230 V. 50-60 HZ	CONTACTOR 230 V. 50-60 HZ	1	1	1	1				
13	Z683087000	CONTACTOR 3TF20 01-3AL2 230	CONTACTOR 3TF20 01-3AL2 230	1	1	1	1				
14	Z213007000	CONTACTOR 230 V. 50-60 HZ	CONTACTOR 230 V. 50-60 HZ	2	2	2	2				

MOD.	LAVAVAJILLAS MODULARES MODULAR DISHWASHERS	ZONA	CONJUNTO FUNCIONAL ELECTRICO FUNCTIONAL ELECTRIC UNIT	PLANO	C-2152

ITEM	CODIGO	DENOMINACION	TEXTO	FI-280 ECO-280	FI-370 ECO-370	FI-460 I ECO-460 I	FI-550 D ECO-550 D				NOTAS
15	P663014000	SECCIONADOR 3P.125A SIEMENS	SECTIONATOR 3P.125A SIEMENS	1	1	1	_			SOLO FI	INTRODUCIDO 04.01.10
15	Z513081000	SECCIONADOR 4P. 160A SIEMENS	SECTIONATOR 4P.160A SIEMENS	_	_	_	1			SOLO FI	INTRODUCIDO 04.01.10
15	P683039000	SECCIONADOR 4P.63A SIEMENS	SECTIONATOR 4P.63A SIEMENS	1	1	_	_			SOLO ECO	INTRODUCID. 04.01.10
15	P663014000	SECCIONADOR 3P.125A SIEMENS	SECTIONATOR 3P.125A SIEMENS	_	_	1	_			SOLO ECO	INTRODUCID. 04.01.10
S/Nº	P663015000	BLOQUE 4º P. SECCIONAD. 125A S.	SECTION. 125A 4º POLO SIEMEN	1	1	1	_			SOLO FI	INTRODUCID. 04.01.10
S/Nº	P663015000	BLOQUE 4º P. SECCIONAD. 125A S.	SECTION. 125A 4º POLO SIEMEN	_	_	1	1			SOLO ECO	INTRODUCID. 04.01.10
16	Z313042000	SOPORTE CUADRO ELECTRICO	ELECTRIC PANEL SUPPORT	1	1	1	1				ELIMINADO 01.12.09
16	Z313088000	SOPORTE CUADRO ELECTRICO	ELECTRIC PANEL SUPPORT	1	1	1	1				INTRODUCIDO 01.12.09
17	X183011000	CONTACTOR 3RT1024-1AN20 230	CONTACTOR 3RT1024-1AN20 23	5	5	5	5				
18	Z743009000	CONT.SIRIUS 3RT10 16-2AP02	SIRIUS CONT. 3RT10 16-2AP02	1	1	1	1				
19	Z203050000	CONTACTOR SIRIUS 3R 230V50-60	CONTACTOR SIRIUS 3R 230V50-	3	3	3	3				
20	Z123022000	TEMPORI. SYRELEC TRU SECADO	TIMER . SYRELEC TRU DRYER	2	2	2	2				
21	Z213007000	CONTACTOR 230 V. 50-60 HZ	CONTACTOR 230 V. 50-60 HZ	_	1	1	2				
22	Z213007000	CONTACTOR 230 V. 50-60 HZ	CONTACTOR 230 V. 50-60 HZ	1	1	1	1				
23	X183011000	CONTACTOR 3RT1024-1AN20 230	CONTACTOR 3RT1024-1AN20 23	1	1	2	2				
24	Z103070000	BLOQ. AUX. 3RH1921-1CA10	AUX. BLOCK 3RH1921-1CA10	1	1	1	1				
25	Z103029000	BORNE PAS WDU 2.5 10200-0	TERMINAL PAS WDU 2.5 10200-0	6	6	6	6				
	P453026000	BORNE TIER 10 WPE-10103.O	TERMINAL TIER 10 WPE-10103.O	1	1	1	1				
	R073005000	BORNAS PORTA FUSIBLES	FUSE HOLDER TERMINALS	2	2	2	2				
	R723015000	FUSIBLE CRISTAL 10A.	GLASS FUSE 10A.	2	2	2	2				
	Z263303000	TOPE FINAL	END STOP	1	1	1	1				
26	Z203050000	CONTACTOR SIRIUS 3R 230V50-60	CONTACTOR SIRIUS 3R 230V50-	1	1	1	1				
27	Z103035000	BORNA TIERRA 35MM	EARTH TERMINAL 35MM	1	1	1	1				
	R673010000	BORNA PASO AZUL 35MM	THROUGH TERMINAL BLUE 35MI	1	1	1	1				
	Z683096000	TOPE FINAL WEW35 10590.0	END STOP WEW35 10590.0	1	1	1	1				
	R143011000	BORNA WDU-70/N REF.951219	TERMINAL WDU-70/N REF.95121	3	3	3	3			SOLO FI	ELIMINADO 01.12.09
	R263003000	BORNA PASO 35MM	THROUGH TERMINAL 35MM	3	3	3	3			SOLO ECO	ELIMINADO 01.12.09
	Z513083000	BORNE DISTRIBUIDOR 70 MM2	DISTRIBUI. 70 MM2 TERMINAL	1	1	1	1			SOLO FI	INTRODUCIDU 04.01.10
	Z513083000	BORNE DISTRIBUIDOR 70 MM2	DISTRIBUI. 70 MM2 TERMINAL	_	_	1	1			SOLO ECO	INTRODUCID. 01.12.09
	Z273083000	BORNE DISTRIBUIDOR 35 MM2	DISTRIBUI. 35 MM2 TERMINAL	3	3	_	_			SOLO ECO	INTRODUCID. 01.12.09

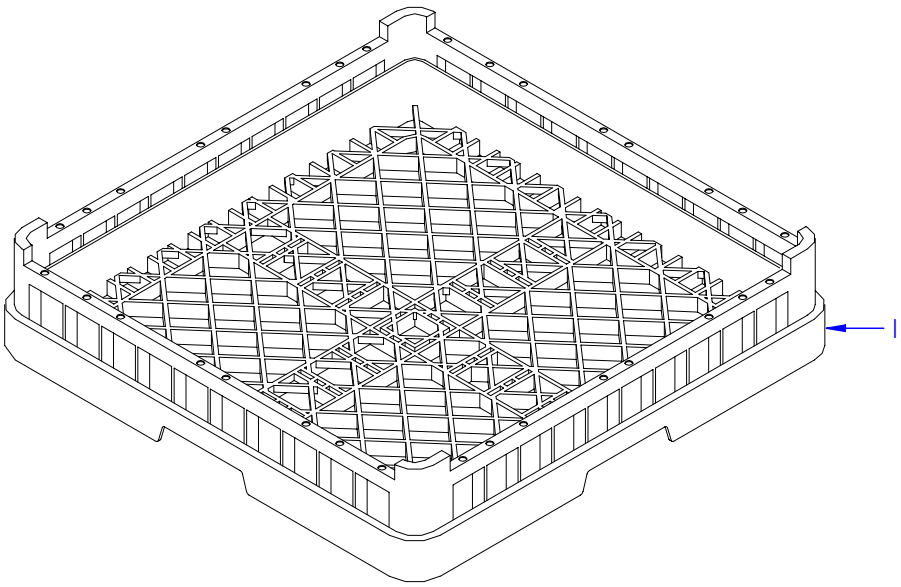

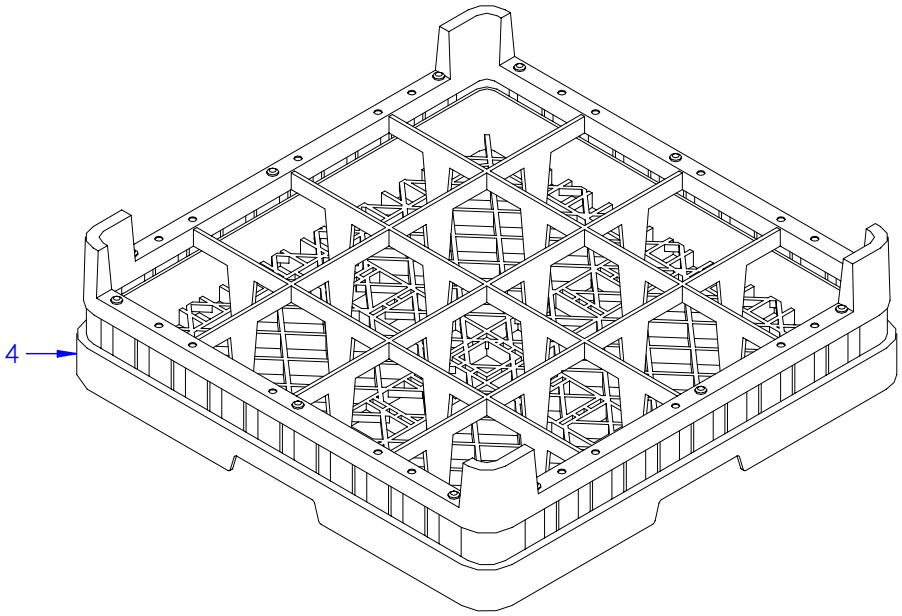

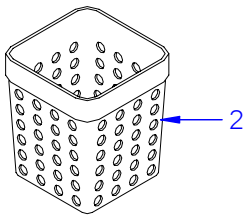

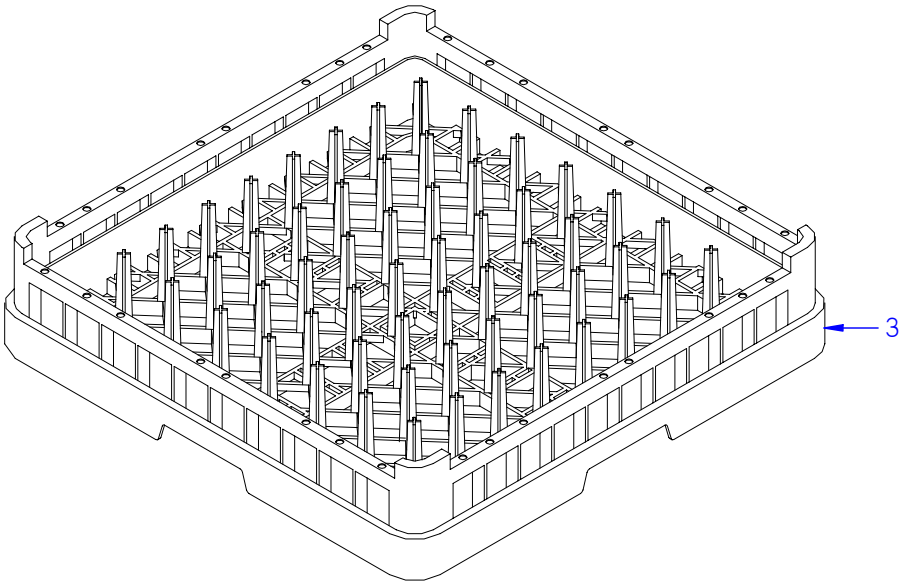

ITEM MARCADO EN COLOR = REPUESTO RECOMENDADO
COLOURED ITEM = RECOMMENDED SPARE PART

N plano	Firma	Fecha	Aparato	Lamina	
C-2153		2008-11	CESTILLOS LAVAVAJILLAS MODULARES	14	Fagor Industrial S.Coop. Oñate

MOD.	LAVAVAJILLAS MODULARES MODULAR DISHWASHERS	ZONA	CESTILLOS / BASKETS	PLANO	C-2153

ITEM	CODIGO	DENOMINACION	TEXTO	FI-280 ECO-280	FI-370 ECO-370	FI-460 ECO-460	FI-550 ECO-550					
1	Z655301000	CESTILLO BASE CT-10	BASE BASKET CT-10	2	2	2	2					
2	Z655314000	CESTILLO CUBIERTOS	CUTLERY BASKET	16	16	16	16					ELIMINA. 01.12.09
2	Z275315000	CESTILLO CUBIERTOS	CUTLERY BASKET	1	1	1	1					INTROD. 01.12.09
3	Z655302000	CESTILLO PLATOS CP-16-18	PLATE BASKET CP-16-18	2	2	2	2					
4	Z655316000	CESTILLO CV-16-105	BASKET CV-16-105	1	1	1	1					

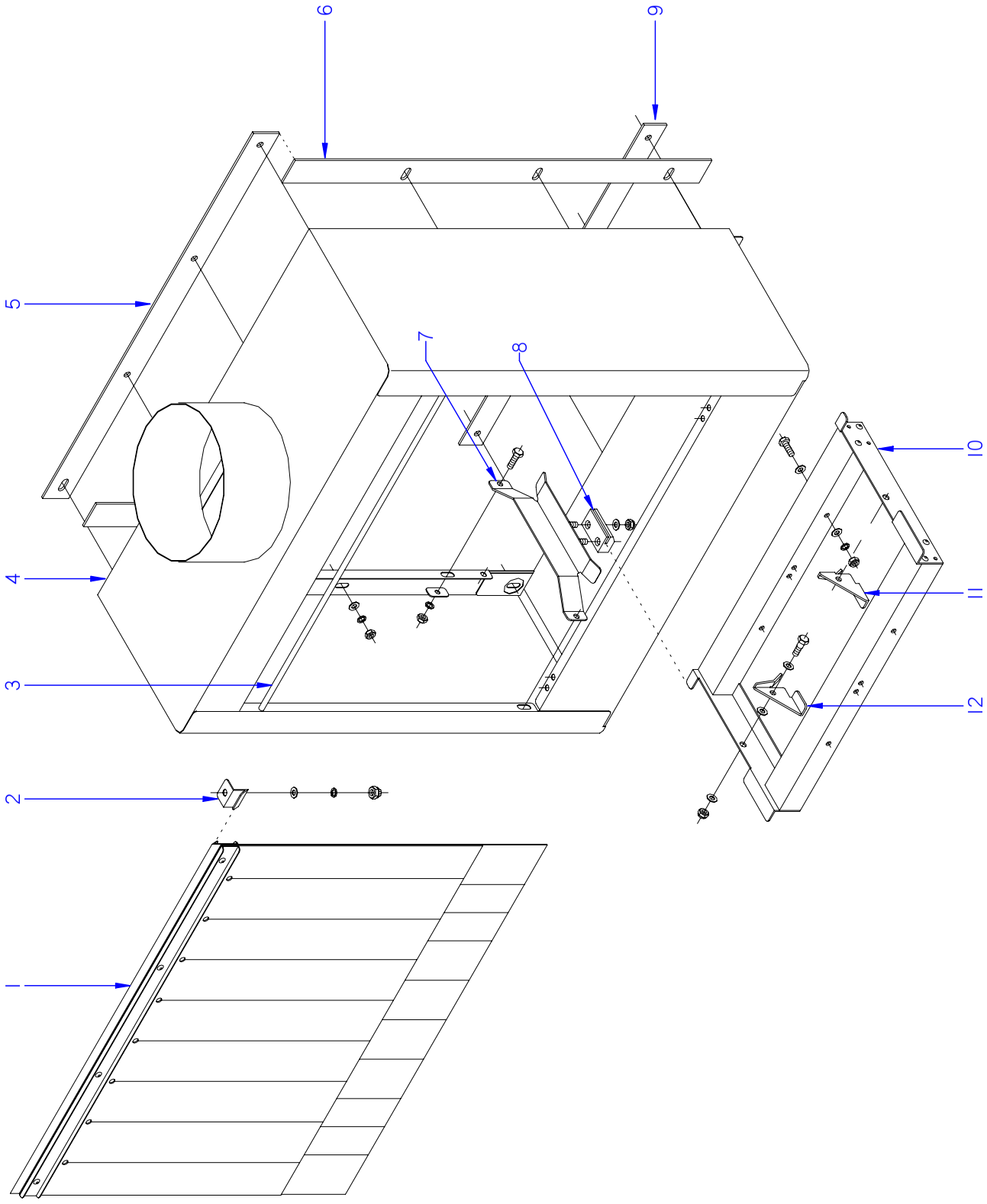

ITEM MARCADO EN COLOR = REPUESTO RECOMENDADO
COLOURED ITEM = RECOMMENDED SPARE PART

N plano	Firma	Fecha	Aparato	Lamina	
C-2154		2008-11	TUNEL ASPIRADOR DE VAHOS LAVAVAJILLAS MODULARES	15	Fagor Industrial S.Coop. Oñate

MOD.	LAVAVAJILLAS MODULARES MODULAR DISHWASHERS	ZONA	TUNEL ASPIRADOR DE VAHOS STEAM INTAKE TUNNEL	PLANO	C-2154

ITEM	CODIGO	DENOMINACION	TEXTO	FI-280 ECO-280	FI-370 ECO-370	FI-460 ECO-460	FI-550 ECO-550				NOTAS
1	Z276419000	CORTINA EXTERIOR COMPLETA	COMPLETE EXTERIOR CURTAIN	1	1	1	1				
	Q302022000	ARANDELA 16X6X1.2 A.304	WASHER 16X6X1.2 A.304	12	12	12	12				
	Q262040000	ARANDELA GROW. A6 A304	WASHER GROW. A6 A304	12	12	12	12				
	Q162040000	TUERCA EXAGONAL M6	HEXAGONAL NUT M6	12	12	12	12				
2	Z270326000	SUJECION CORTINA	CURTAIN FASTENING	2	2	2	2				
	Q262040000	ARANDELA GROW. A6 A.304	WASHER GROW. A6 A.304	2	2	2	2				
	Q232040000	ARANDELA A6	WASHER A6	2	2	2	2				
	Q212040000	TUERCA SOMBRERETE M6	COWL NUT M6	2	2	2	2				
3	Z276520000	PROTECTOR SUPER. SOLDADO	UPPER PROTECTION WELDED	1	1	1	1				
	Q262030000	ARANDELA GROW. A5 A.304	WASHER GROW. A5 A.304	2	2	2	2				
	Q232030000	ARANDELA A5	WASHER A5	2	2	2	2				
	Q012032000	TORNILLO EXAGONAL M5X15	HEXAGONAL BOLT M5x15	2	2	2	2				
4	Z276501000	TUNEL ASPIRADOR VAHOS COMP.	COMP. STEAM EXTRACTOR TUN	1	1	1	1				
5	Z276206000	JUNTA SUPERIOR COMPACTO	COMPACT UPPER JOINT	1	1	1	1				
6	Z276208000	JUNTA LATERAL COMPACTO	COMPACT SIDE JOINT	2	2	2	2				
7	Z276215000	GUIA ENTRADA-SALIDA	INPUT-OUTPUT GUIDE	2	2	2	2				
	Q012042000	TORNILLO EXAGONAL M6X15 A304	HEXAGONAL BOLT M6x15 A304	4	4	4	4				
	Q262040000	ARANDELA GROW. A6 A.304	WASHER GROW. A6 A.304	4	4	4	4				
	Z310341000	ARANDELA RECTANGULAR	RECTANGULAR WASHER	4	4	4	4				
	Q162040000	TUERCA EXAGONAL M6	HEXAGONAL NUT M6	4	4	4	4				
8	Z275075000	DESLIZAMIENTO GUIAS	GUIDE SLIDE	2	2	2	2				
	Q232040000	ARANDELA A6	WASHER A6	4	4	4	4				
	Q222012000	TUERCA AUTOBLOCANTE M6	SELF-LOCKING NUT M6	4	4	4	4				
9	Z276207000	JUNTA INFERIOR COMPACTO	COMPACT LOWER GUIDE	1	1	1	1				
10	Z276221000	SOPORTE UÑA ENTRADA	INPUT CLAW SUPPORT	1	1	1	1				
	Q012042000	TORNILLO EXAGONAL M6X15 A304	HEXAGONAL BOLT M6x15 A304	2	2	2	2				
	Q232050000	ARANDELA A8	WASHER A8	4	4	4	4				
	Q232040000	ARANDELA A6	WASHER A6	2	2	2	2				
	Q222012000	TUERCA AUTOBLOCANTE M6	SELF-LOCKING NUT M6	2	2	2	2				
11	Z275077000	UÑA ARRASTRE IZQUIERDA LASER	LASER LEFT DRAG CLAW	1	1	1	1				

MOD.	LAVAVAJILLAS MODULARES MODULAR DISHWASHERS	ZONA	TUNEL ASPIRADOR DE VAHOS STEAM INTAKE TUNNEL	PLANO	C-2154

ITEM	CODIGO	DENOMINACION	TEXTO	FI-280 ECO-280	FI-370 ECO-370	FI-460 ECO-460	FI-550 ECO-550				NOTAS
12	Z275078000	UÑA ARRASTRE DERECHA LASER	LASER RIGHT DRAG CLAW	1	1	1	1				
	Q232050000	ARANDELA A8	WASHER A8	4	4	4	4				
	Q152046000	TORNILLO EXAGON. CON CUELLO	HEXAGONAL BOLT. WITH NECK	2	2	2	2				
	Q232040000	ARANDELA A6	WASHER A6	2	2	2	2				
	Q222012000	TUERCA AUTOBLOCANTE M6	SELF-LOCKING NUT M6	2	2	2	2				
S/Nº	Z336201000	JUNTA ANTERIOR MODULAR	FRONT MODULAR JOINT	1	2	2	3				
S/Nº	Z336202000	JUNTA POSTERIOR MODULAR	REAR MODULAR JOINT	1	2	2	3				
S/Nº	Z336203000	JUNTA SUPERIOR MODULAR	UPPER MODULAR JOINT	1	3	3	3				
S/Nº	Z336204000	JUNTA INFERIOR MODULAR	LOWER MODULAR JOINT	1	3	3	3				

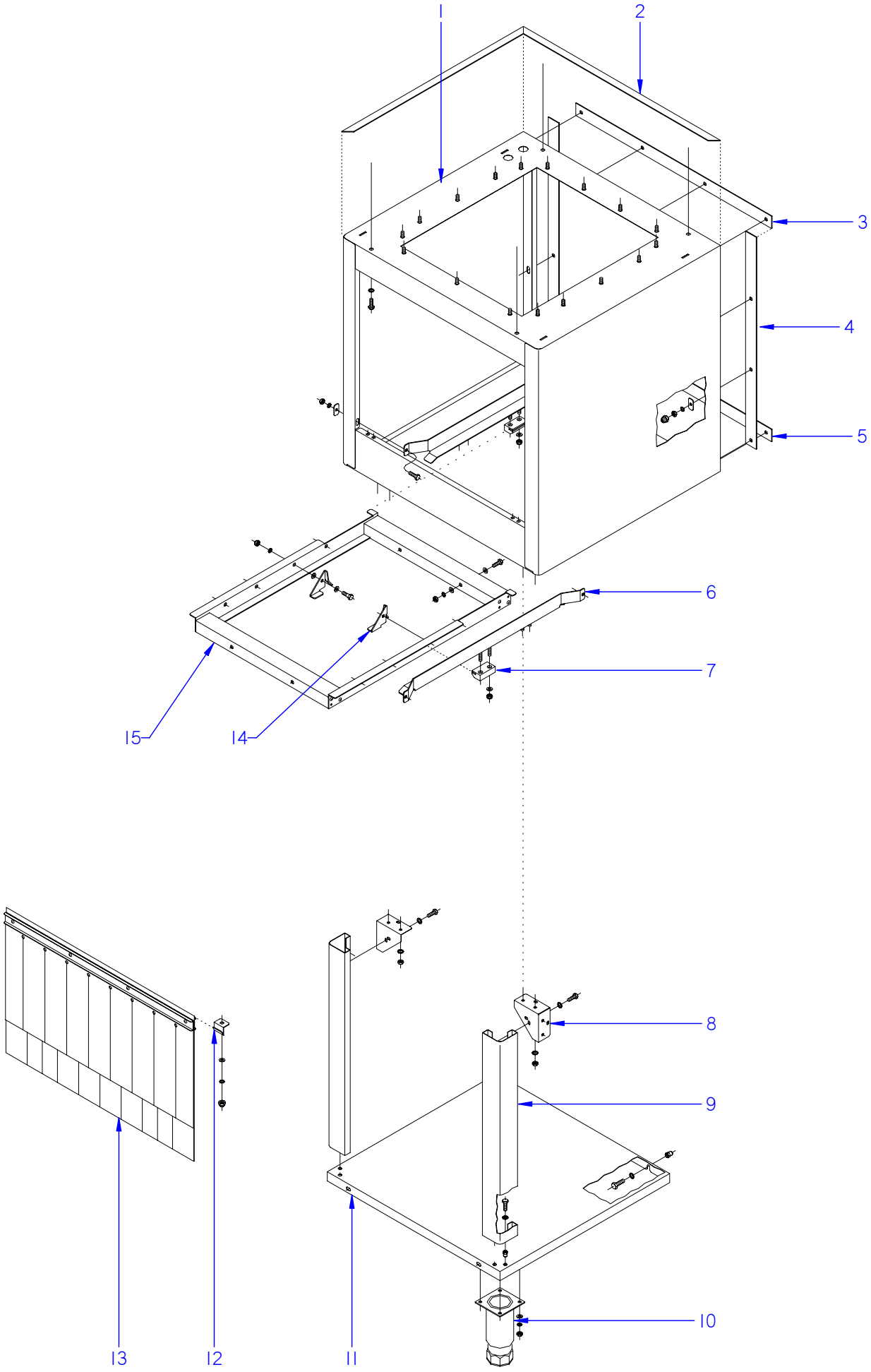

ITEM MARCADO EN COLOR = REPUESTO RECOMENDADO
COLOURED ITEM = RECOMMENDED SPARE PART

N plano	Firma	Fecha	Aparato	Lamina	
C-2155		2008-11	TUNEL CONDENSADOR DE VAHOS LAVAVAJILLAS MODULARES	16	Fagor Industrial S.Coop. FAGOR Oñate

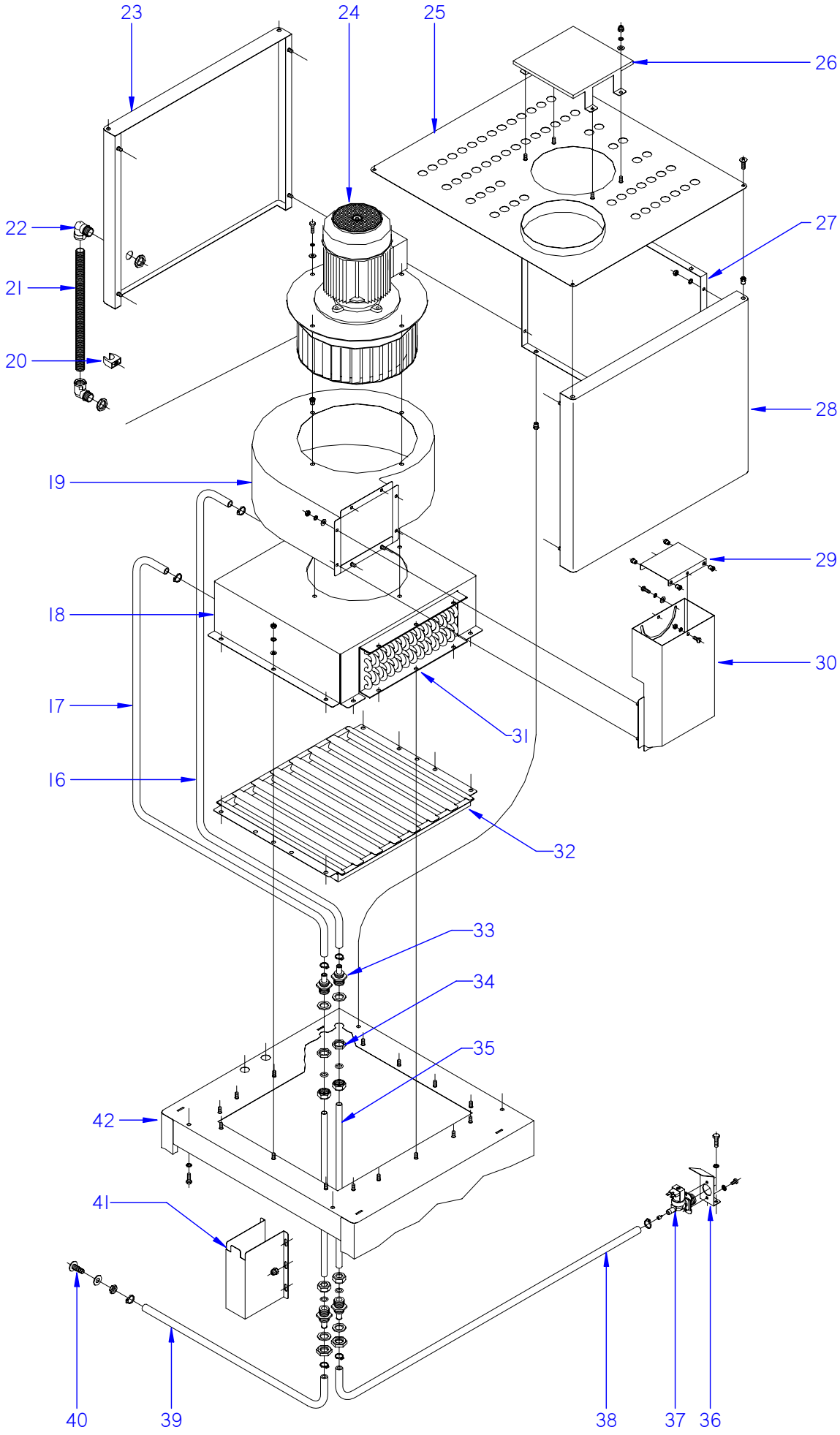

ITEM MARCADO EN COLOR = REPUESTO RECOMENDADO
COLOURED ITEM = RECOMMENDED SPARE PART

N plano	Firma	Fecha	Aparato		Lamina	
C-2156		2008-11	CONDENSADOR DE VAHOS LAVAVAJILLAS MODULARES		17	Fagor Industrial S.Coop. Oñate

MOD.	LAVAVAJILLAS MODULARES MODULAR DISHWASHERS	ZONA	TUNEL CONDENSADOR DE VAHOS STEAM CONDENSER TUNNEL	PLANO	C-2155 C-2156

ITEM	CODIGO	DENOMINACION	TEXTO	TUNEL COND. DE VAHOS							NOTAS
1	Z276732000	TUNEL CONDENSADOR DE VAHOS (	COMP STEAM CONDENSER TUN	1							
	Z276520000	PROTECTOR SUPERIOR SOLDAD.	WELDED UPPER PROTECTOR	1							
2	Z270334000	PERFIL	PROFILE	4							
3	Z276206000	JUNTA SUPERIOR COMPACTO**	COMPACT UPPER JOINT**	1							
4	Z276208000	JUNTA LATERAL COMPACTO**	COMPACT SIDE JOINT**	2							
5	Z276207000	JUNTA INFERIOR COMPACTO**	COMPACT LOWER JOINT **	1							
	Q302022000	ARANDELA 16X6X1.2 A.304	WASHER 16X6X1.2 A.304	12							
	Q262040000	ARANDELA GROW. A6 A304	WASHER GROW. A6 A304	12							
	Q162040000	TUERCA EXAGONAL M6	HEXAGONAL NUT M6	12							
	Q212040000	TUERCA SOMBRERETE M6	COWL NUT M6	10							
6	Z276309000	GUIA DE SECADO COMPLETO	COMPLETE DRYER GUIDE	2							
7	Z275075000	DESLIZAMIENTO GUIAS	GUIDE SLIDE	4							
	Q232040000	ARANDELA A6	WASHER A6	8							
	Q222012000	TUERCA AUTOBLOCANTE M6	SELF-LOCKING NUT M6	8							
	Q012042000	TORNILLO EXAGONAL M6X15 A304	HEXAGONAL BOLT M6x15 A304	4							
	Q262040000	ARANDELA GROW. A6 A304	WASHER GROW. A6 A304	4							
	Z310341000	ARANDELA RECTANGULAR	RECTANGULAR WASHER	4							
	Q162040000	TUERCA EXAGONAL M6	HEXAGONAL NUT M6	4							
8	Z276354000	AMARRE PATA	LEG FASTENING	2							
	Q262040000	ARANDELA GROW. A6 A304	WASHER GROW. A6 A304	4							
	Q162040000	TUERCA EXAGONAL M6	HEXAGONAL NUT M6	4							
9	Z276395000	PATA TUNEL SECADO COMPLETA	COMPLETE DRYER TUNNEL LEG	2							ELIMINADO 19.12.13
9	12098654	PATA TUNEL SECADO COMPLETA	COMPLETE DRYER TUNNEL LEG	2							INTRODUCIDO 19.12.13
10	X260151000	PATA REGULABLE	ADJUSTABLE LEG	2							
	Q302022000	ARANDELA 16X6X1.2 A.304	WASHER 16X6X1.2 A.304	8							
	Q262040000	ARANDELA GROW. A6 A.304	WASHER GROW. A6 A.304	8							
	Q162040000	TUERCA EXAGONAL M6	HEXAGONAL NUT M6	8							
11	Z276398000	BANDEJA TUNEL SECADO COMPL.	COMPL. DRYER TUNNEL TRAY	1							
	Q221342000	REMACHE EXAGONAL M5	HEXAGONAL RIVET M5	8							
	Q242030000	ARANDELA ABANICO A5 A.304	FAN WASHER A5 A.304	8							
	Q012031000	TORNILLO EXAGONAL M5X10 A304	HEXAGONAL BOLT M5x10 A304	8							

MOD.	LAVAVAJILLAS MODULARES MODULAR DISHWASHERS	ZONA	TUNEL CONDENSADOR DE VAHOS STEAM CONDENSER TUNNEL	PLANO	C-2155 C-2156

ITEM	CODIGO	DENOMINACION	TEXTO	TUNEL COND. DE VAHOS							NOTAS
12	Z270326000	SUJECION CORTINA	CURTAIN FASTENING	2							
	Q262030000	ARANDELA GROW. A5 A.304	WASHER GROW. A5 A.304	2							
	Q232040000	ARANDELA A6	WASHER A6	2							
13	Z276419000	CORTINA EXTERIOR COMPLETA	COMPLETE EXTERIOR CURTAIN	1							
14	Z275077000	UÑA ARRASTRE IZQUIERDA LASER	LASER LEFT DRAG CLAW	5							
S/Nº	Z275078000	UÑA ARRASTRE DERECHA LASER	LASER RIGHT DRAG CLAW	5							
	Q232050000	ARANDELA A8	WASHER A8	20							
	Q152046000	TORNILLO EXAGON. CON CUELLO	HEXAGONAL BOLT. WITH NECK	10							
	Q232040000	ARANDELA A6	WASHER A6	10							
	Q222012000	TUERCA AUTOBLOCANTE M6	SELF-LOCKING NUT M6	10							
15	Z276311000	SOPORTE UÑA SECADO COMPL.	COMPL. DRYER CLAY SUPPORT	1							
	Q012042000	TORNILLO EXAGONAL M6X15 A304	HEXAGONAL BOLT M6x15 A304	2							
	Q232050000	ARANDELA A8	WASHER A8	4							
	Q232040000	ARANDELA A6	WASHER A6	2							
	Q222012000	TUERCA AUTOBLOCANTE M6	SELF-LOCKING NUT M6	2							
16	3676900000	TUBO GOMA NEGRA Ø 17*10	BLACK RUBBER PIPE 17*10	1							
	Q881302000	ABRAZADERA 12-20	CLAMP 12-20	2							
17	3676900000	TUBO GOMA NEGRA Ø 17*10	BLACK RUBBER PIPE 17*10	1							
	Q881302000	ABRAZADERA 12-20	CLAMP 12-20	2							
18	Z276741000	CUBIERTA BATERIA	BATTERY COVER	1							
	Q221343000	REMACHE EXAGONAL M6	HEXAGONAL RIVET M6	4							
	Q262040000	ARANDELA GROW. A6 A.304	WASHER GROW. A6 A.304	12							
	Q162040000	TUERCA EXAGONAL M6	HEXAGONAL NUT M6	12							
19	Z276742000	CUBIERTA VENTOLA COMPLETA	COMPLETE VENTOLA COVER	1							
	Q221343000	REMACHE EXAGONAL M6	HEXAGONAL RIVET M6	8							
20	Z316354000	ABRAZADERA DE PRESION	PRESSURE CLAMP	2							
21	3712300000	TUBO PG21 0233.204.023	PIPE PG21 0233.204.023	1							
22	Z703006000	RACORD A 90 SFWO-P213T	CONNECTION A 90 SFWO-P213T	2							
	R023025000	CONTRATUERCA (GAES)	COUNTERNUT (GAES)	2							
23	Z276752000	POSTERIOR CUBIERTA COMPL.	COMPLETE REAR COVER	1							
24	Z276760000	VENTILADOR CENTRIFUGO	SPIN FAN	1							

MOD.	LAVAVAJILLAS MODULARES MODULAR DISHWASHERS	ZONA	TUNEL CONDENSADOR DE VAHOS STEAM CONDENSER TUNNEL	PLANO	C-2155 C-2156

ITEM	CODIGO	DENOMINACION	TEXTO	TUNEL COND. DE VAHOS							NOTAS
25	Z276756000	TAPA CUBIERTA COMPLETA	COMPLETE COVER LID	1							
	Q152017000	TORNILLO AMARRE M6X13 A304	FASTENING BOLT M6X13 A304	4							
	Q221343000	REMACHE EXAGONAL M6	HEXAGONAL RIVET M6	8							
26	Z276759000	CUBIERTA MOTOR	MOTOR COVER								
	Q262040000	ARANDELA GROW. A6 A.304	WASHER GROW. A6 A.304	16							
	Q162040000	TUERCA EXAGONAL M6	HEXAGONAL NUT M6	16							
27	Z276751000	LATERAL CUBIERTA	SIDE COVER	2							
28	Z276342000	ANTERIOR CUBIERTA COMPLETA	COMPLETE FRONT COVER	1							
29	Z276755000	REGULADOR SALIDA AIRE	AIR OUTPUT CONTROL	1							
	Q152047000	TORNILLO EXAGON. CON CUELLO	HEXAGONAL BOLT. WITH NECK	2							
	Q232050000	ARANDELA A8	WASHER A8	2							
	Q262030000	ARANDELA GROW. A5 A.304	WASHER GROW. A5 A.304	2							
	Q162030000	TUERCA EXAGONAL M5	HEXAGONAL NUT M5	2							
	Q222011000	REMACHE EXAGONAL M5 (INOX)	HEXAGONAL RIVET M5 (INOX)	2							
30	Z276746000	SALIDA AIRE COMPLETO	COMPLETE AIR OUTPUT	1							
	Q232040000	ARANDELA A6	WASHER A6	4							
	Q162040000	TUERCA EXAGONAL M6	HEXAGONAL NUT M6	4							
	Q262040000	ARANDELA GROW. A6 A.304	WASHER GROW. A6 A.304	12							
	Q012042000	TORN.EXA. M6X15 AISI 304	HEX BOLT M6X15 AISI 304	8							
31	Z276762000	BATERIA COMPLETA	COMPLETE BATTERY	1							
32	Z276734000	REJILLA ASPIRACION VAHOS COM.	COM. STEAM EXTRACT. GRILLE	1							
33	Z271901000	PASAMUROS ACLARADO	RINSE BUSHING	4							
	Q307032000	JUNTA 32X21X3	JOINT 32X21X3	4							
34	Q223031000	TUERCA M.24x2.5	NUT M.24X2.5	2							
	Q223023000	TUERCA EXAGONAL 5-8 LATON	HEX NUT 5-8 BRASS	2							
35	Z276761000	TUBO EMPALME	CONNECTION PIPE	2							
	Q307063000	JUNTA TORICA 12.29X19.35X3.53	O-RING 12.29X19.35X3.53	4							
	Q223108000	TUERCA M.24X2.5	NUT M.24X2.5	4							

MOD.	LAVAVAJILLAS MODULARES MODULAR DISHWASHERS	ZONA	TUNEL CONDENSADOR DE VAHOS STEAM CONDENSER TUNNEL	PLANO	C-2155 C-2156

ITEM	CODIGO	DENOMINACION	TEXTO	TUNEL COND. DE VAHOS							NOTAS
36	Z201101000	ESCUADRA AMARRE ELECTROVA	SOLENOID VALVE BRACKET	1							
	Q032021000	TORNILLO ALOMADO M4X10	CURVED SCREW M4X10	2							
	Q232020000	ARANDELA A-4	WASHER A-4	2							
	Q242020000	ARANDELA ABANICO A.4 A304	FAN WASHER A.4 A304	2							
	Q012042000	TORNILLO EXAGONAL M6X15 A304	HEXAGONAL BOLT M6x15 A304	2							
	Q262040000	ARANDELA GROW. A6 A.304	WASHER GROW. A6 A.304	14							
37	Z106811000	ELECTROVALVULA MONTADA	SOLENOID VALVE MOUNTED	1							
38	3676900000	TUBO GOMA NEGRA Ø 17*10	BLACK RUBBER PIPE 17*10	1							
	Q881302000	ABRAZADERA 12-20	CLAMP 12-20	2							
39	3676900000	TUBO GOMA NEGRA Ø 17*10	BLACK RUBBER PIPE 17*10	1							
	Q881302000	ABRAZADERA 12-20	CLAMP 12-20	2							
40	Z600907000	TOMA DE PRESION	PRESSURE CONNECTION	1							
	Z600908000	ARANDELA	WASHER	1							
	Q223013000	TUERCA	NUT	1							
41	Z276772000	CUBIERTA	COVER	1							
	Q152014000	PERNO SOLDADO M5X10	WELDED BOLT M5X10	6							
	Q212031000	TUERCA SOMBRERETE M5	COWL NUT M5	6							
42	Z276732000	TUNEL CONDENSADOR DE VAHOS	COMP STEAM CONDENSER TUN	1							
S/Nº	Z316702000	CABLEADO CONDENSADOR	CONDENSER WIRING	1							

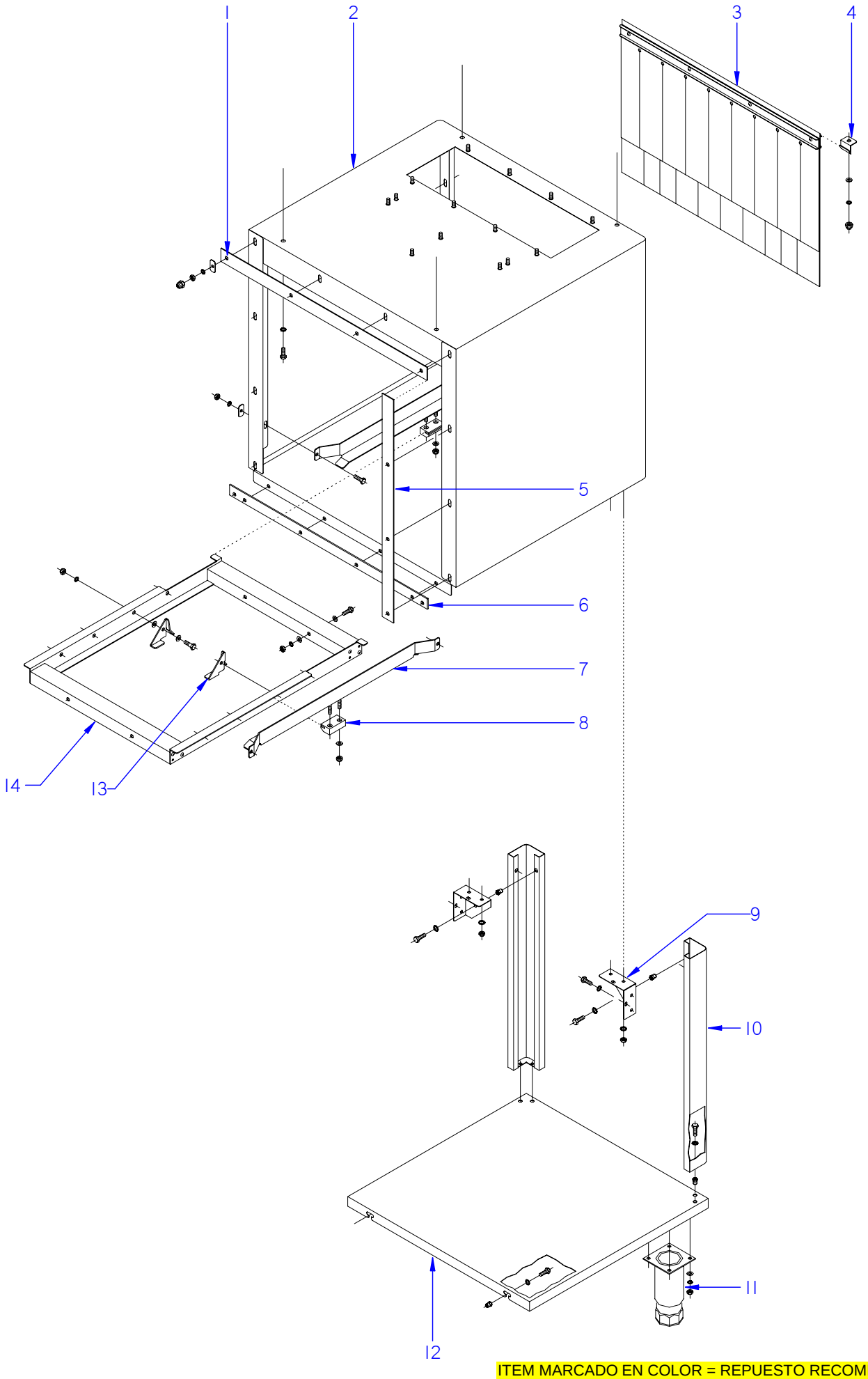

ITEM MARCADO EN COLOR = REPUESTO RECOMENDADO
COLOURED ITEM = RECOMMENDED SPARE PART

N plano	Firma	Fecha	Aparato		Lamina	
C-2157		2008-11	TUNEL DE SECADO LAVAVAJILLAS MODULARES		18	Fagor Industrial S.Coop. Oñate

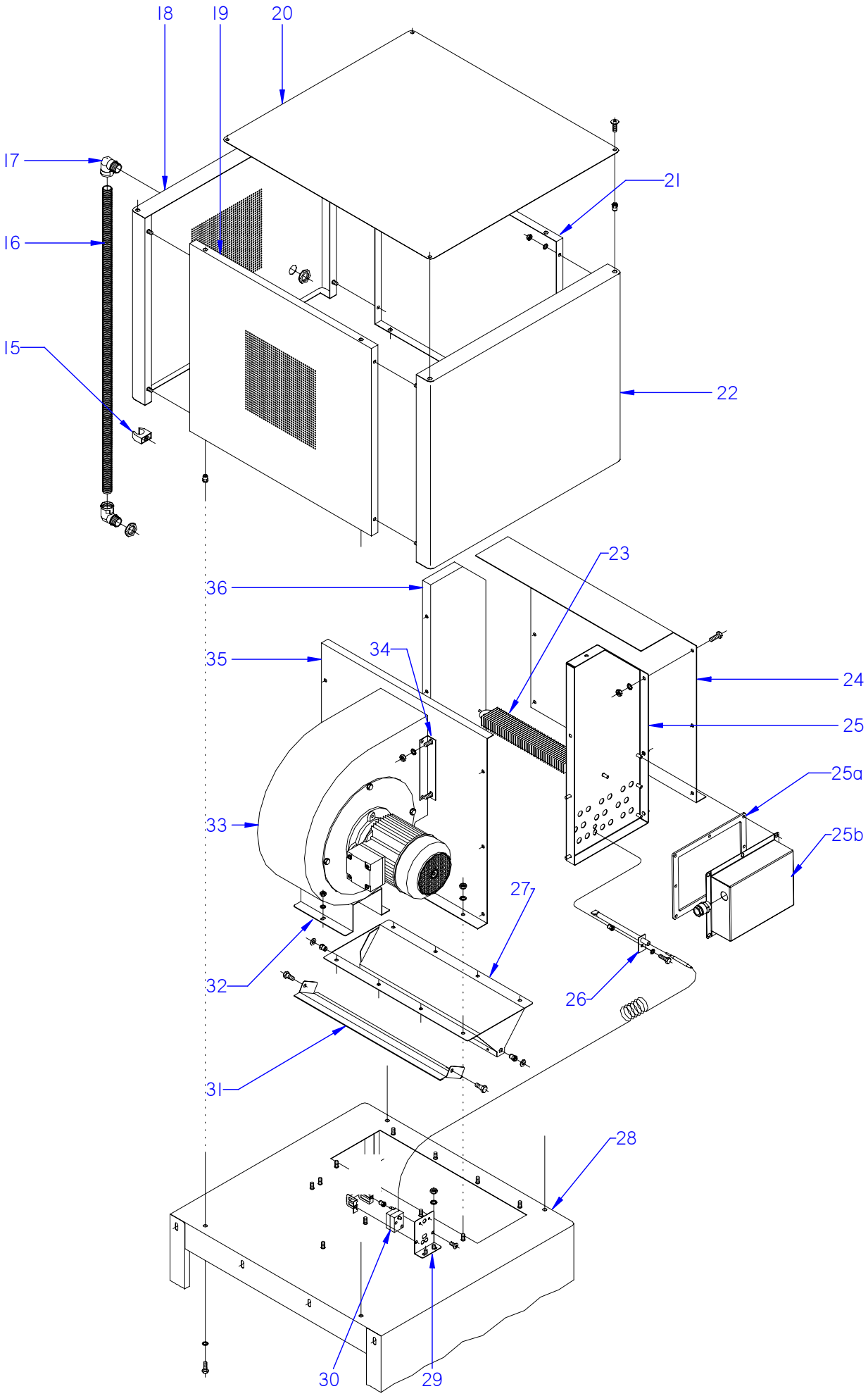

ITEM MARCADO EN COLOR = REPUESTO RECOMENDADO
COLOURED ITEM = RECOMMENDED SPARE PART

N plano	Firma	Fecha	Aparato	SECADO	Lamina	
C-2158		2008-11	LAVAVAJILLAS MODULARES		19	Fagor Industrial S.Coop. FAGOR Oñate

MOD.	LAVAVAJILLAS MODULARES MODULAR DISHWASHERS	ZONA	TUNEL DE SECADO / DRYING TUNNEL	PLANO	C-2157 C-2158

ITEM	CODIGO	DENOMINACION	TEXTO	TUNEL DE SECADO 600	TUNEL DE SECADO 800						NOTAS
1	Z276206000	JUNTA SUPERIOR COMPACTO**	COMPACT UPPER JOINT**	1	1						
	Q302022000	ARANDELA 16X6X1.2 A.304	WASHER 16X6X1.2 A.304	4	4						
	Q262040000	ARANDELA GROW. A6 A304	WASHER GROW. A6 A304	4	4						
	Q162040000	TUERCA EXAGONAL M6	HEXAGONAL NUT M6	12	12						
2	Z276301000	TUNEL SECADO SOLDADO	WELDED DRYER TUNNEL	1	_						
2	Z316301000	TUNEL SECADO SOLDADO	WELDED DRYER TUNNEL	_	1						
3	Z276429000	CORTINA INTERIOR COMPLETA	COMPLETE INTERIOR CURTAIN	1	1						
4	Z270326000	SUJECION CORTINA	CURTAIN FASTENING	2	2						
	Q262030000	ARANDELA GROW. A5 A.304	WASHER GROW. A5 A.304	2	2						
	Q232040000	ARANDELA A6	WASHER A6	2	2						
	Q212031000	TUERCA SOMBRERETE M5	COWL NUT M5	2	2						
5	Z276208000	JUNTA LATERAL COMPACTO**	COMPACT SIDE JOINT**	2	2						
	Q302022000	ARANDELA 16X6X1.2 A.304	WASHER 16X6X1.2 A.304	8	8						
	Q262040000	ARANDELA GROW. A6 A304	WASHER GROW. A6 A304	8	8						
	Q162040000	TUERCA EXAGONAL M6	HEXAGONAL NUT M6	8	8						
6	Z276207000	JUNTA INFERIOR COMPACTO**	COMPACT LOWER JOINT **	1	1						
	Q302022000	ARANDELA 16X6X1.2 A.304	WASHER 16X6X1.2 A.304	4	4						
	Q262040000	ARANDELA GROW. A6 A304	WASHER GROW. A6 A304	4	4						
	Q162040000	TUERCA EXAGONAL M6	HEXAGONAL NUT M6	4	4						
7	Z276309000	GUIA DE SECADO COMPLETO 600	COMPLETE DRYER GUIDE 600	2	_						
7	Z316341000	GUIA DE SECADO COMPLETO 800	COMPLETE DRYER GUIDE 800	_	2						
8	Z275075000	DESLIZAMIENTO GUIAS	GUIDE SLIDE	4	4						
	Q232040000	ARANDELA A6	WASHER A6	8	8						
	Q222012000	TUERCA AUTOBLOCANTE M6	SELF-LOCKING NUT M6	8	8						
	Q012042000	TORNILLO EXAGONAL M6X15 A304	HEXAGONAL BOLT M6x15 A304	4	4						
	Q262040000	ARANDELA GROW. A6 A304	WASHER GROW. A6 A304	4	4						
	Z310341000	ARANDELA RECTANGULAR	RECTANGULAR WASHER	4	4						
	Q162040000	TUERCA EXAGONAL M6	HEXAGONAL NUT M6	4	4						
9	Z276354000	AMARRE PATA	LEG FASTENING	2	2						
	Q262040000	ARANDELA GROW. A6 A304	WASHER GROW. A6 A304	4	4						
	Q162040000	TUERCA EXAGONAL M6	HEXAGONAL NUT M6	4	4						

MOD.	LAVAVAJILLAS MODULARES MODULAR DISHWASHERS	ZONA	TUNEL DE SECADO / DRYING TUNNEL	PLANO	C-2157 C-2158

ITEM	CODIGO	DENOMINACION	TEXTO	TUNEL DE SECADO 600	TUNEL DE SECADO 800						NOTAS
10	Z276395000	PATA TUNEL SECADO COMPLETA	COMPLETE DRYER TUNNEL LEG	2	2						ELIMINADO 19.12.13
10	12098654	PATA TUNEL SECADO COMPLETA	COMPLETE DRYER TUNNEL LEG	2	2						INTRODUCIDO 19.12.13
11	X260151000	PATA REGULABLE	ADJUSTABLE LEG	2	2						
	Q302022000	ARANDELA 16X6X1.2 A.304	WASHER 16X6X1.2 A.304	8	8						
	Q162040000	TUERCA EXAGONAL M6	HEXAGONAL NUT M6	8	8						
12	Z276398000	BANDEJA TUNEL SECADO COMPL.	COMPL. DRYER TUNNEL TRAY	1	_						
12	Z316333000	BANDEJA TUNEL SECADO COMPL.	COMPL. DRYER TUNNEL TRAY	_	1						
	Q221342000	REMACHE EXAGONAL M5	HEXAGONAL RIVET M5	8	8						
	Q242030000	ARANDELA ABANICO A5 A.304	FAN WASHER A5 A.304	8	8						
	Q012031000	TORNILLO EXAGONAL M5X10 A304	HEXAGONAL BOLT M5x10 A304	8	8						
13	Z275077000	UÑA ARRASTRE IZQUIERDA LASER	LASER LEFT DRAG CLAW	5	5						
S/Nº	Z275078000	UÑA ARRASTRE DERECHA LASER	LASER RIGHT DRAG CLAW	5	5						
	Q232050000	ARANDELA A8	WASHER A8	20	20						
	Q152046000	TORNILLO EXAGON. CON CUELLO	HEXAGONAL BOLT. WITH NECK	10	10						
	Q232040000	ARANDELA A6	WASHER A6	10	10						
	Q222012000	TUERCA AUTOBLOCANTE M6	SELF-LOCKING NUT M6	10	10						
14	Z276311000	SOPORTE UÑA SECADO COMPL.	COMPL. DRYER CLAY SUPPORT	1	_						
14	Z316306000	SOPORTE UÑA SECADO COMPLETO	COMPL. DRYER CLAW SUPPORT	_	1						
	Q012042000	TORNILLO EXAGONAL M6X15 A304	HEXAGONAL BOLT M6x15 A304	2	2						
	Q232050000	ARANDELA A8	WASHER A8	4	4						
	Q232040000	ARANDELA A6	WASHER A6	2	2						
	Q222012000	TUERCA AUTOBLOCANTE M6	SELF-LOCKING NUT M6	2	2						
15	Z316354000	ABRAZADERA DE PRESION	PRESSURE CLAMP	2	2						
16	3712300000	TUBO PG21 0233.204.023	PIPE PG21 0233.204.023	1	1						
17	Z703006000	RACORD A 90 SFWO-P213T	CONNECTION A 90 SFWO-P213T	2	2						ELIMINADO 30.03.09
17	Z276307000	CODO CURVADO 90º VBD-P213GT	BENDING ELBOW 90º VBD-P213	2	2						INTRODUCIDO 30.03.09
	R023025000	CONTRATUERCA (GAES)	COUNTERNUT (GAES)	2	2						
18	Z276361000	POSTERIOR CUBIERTA COMPLET.	COMPLETE REAR COVER	1	_						ELIMINADO 16.12.13
18	12098292	POSTERIOR CUBIERTA COMPLET.	COMPLETE REAR COVER	1	_						INTRODUCIDO 16.12.13
18	Z316324000	POSTERIOR CUBIERTA COMPLET.	COMPLETE REAR COVER	_	1						
19	Z276345000	LATERAL CUBIERTA	SIDE COVER	1	2						

MOD.	LAVAVAJILLAS MODULARES MODULAR DISHWASHERS	ZONA	TUNEL DE SECADO / DRYING TUNNEL	PLANO	C-2157 C-2158

ITEM	CODIGO	DENOMINACION	TEXTO	TUNEL DE SECADO 600	TUNEL DE SECADO 800						NOTAS
20	Z276346000	TAPA CUBIERTA	COVER LID	1	_						
20	Z316326000	TAPA CUBIERTA	COVER LID	_	1						
	Q162040000	TUERCA EXAGONAL M6	HEXAGONAL NUT M6	16	16						
	Q152017000	TORNILLO AMARRE M6X13 A304	FASTENING BOLT M6X13 A304	4	4						
	Q221343000	REMACHE EXAGONAL M6	HEXAGONAL RIVET M6	8	8						
21	Z276751000	LATERAL CUBIERTA	SIDE COVER	1	_						
22	Z276342000	ANTERIOR CUBIERTA COMPLETA	COMPLETE FRONT COVER	1	_						
22	Z316322000	ANTERIOR CUBIERTA COMPLETA	COMPLETE FRONT COVER	_	1						
23	Z276391000	RESISTENCIA ALETAS 1500W 230V	FIN RESISTOR 1500W 230V	6	9						
	Q221305000	TUERCA EXG. AUTO M4 ZINCADA	HEXAG. NUT AUTO M4 ZINC-COA	12	18						
24	Z276326000	LATERAL IZDO. CAJA RESISTENC.	LEFT SIDE RESISTOR BOX	1	_						ELIMINADO 04.01.10
24	Z276340000	LATERAL IZDO. CAJA RESISTENC.	LEFT SIDE RESISTOR BOX	1	_						INTRODUCIDO 04.01.10
24	Z316316000	LATERAL IZDO. CAJA RESISTENC.	LEFT SIDE RESISTOR BOX	_	1						
25	Z276329000	FRONTAL CAJA RESISTENCIA	RESISTOR BOX FRONT	1	_						ELIMINADO 04.01.10
25	Z276335000	FRONTAL CAJA RESISTENCIA	RESISTOR BOX FRONT	1	_						INTRODUCIDO 04.01.10
25	Z316319000	FRONTAL CAJA RESISTENCIA	RESISTOR BOX FRONT	_	1						ELIMINADO 04.01.10
25	Z316345000	FRONTAL CAJA RESISTENCIAS	RESISTOR BOX FRONT	_	1						INTRODUCIDO 04.01.10
25a	Z276347000	JUNTA SECADO 600	DRYING 600 JOINT	1	_						INTRODUCIDO 04.01.10
25a	Z316344000	JUNTA SECADO 800	DRYING 800 JOINT	_	1						INTRODUCIDO 04.01.10
25b	Z276348000	CAPERUZA SECADO 600	DRYING 600 CAP	1	_						INTRODUCIDO 04.01.10
25b	Z316343000	CAPERUZA SECADO 800	DRYING 800 CAP	_	1						INTRODUCIDO 04.01.10
26	Z276331000	VAINA TS. COMPLETA	COMPLETE TS. SHELL	1	1						
	Q012042000	TORNILLO EXAGONAL M6X15 A304	HEXAGONAL BOLT M6x15 A304	1	2						
	Q262040000	ARANDELA GROW. A6 A.304	WASHER GROW. A6 A.304	1	1						
	Q221343000	REMACHE EXAGONAL M6	HEXAGONAL RIVET M6	1	1						
27	Z276315000	SALIDA SECADO SOLDADO	WELDED DRYER OUTPUT	1	_						
27	Z316386000	SALIDA SECADO SOLDADO	WELDED DRYER OUTPUT	_	1						
	Q262040000	ARANDELA GROW. A6 A.304	WASHER GROW. A6 A.304	8	8						
	Q162040000	TUERCA EXAGONAL M6	HEXAGONAL NUT M6	16	16						
28	Z276301000	TUNEL SECADO SOLDADO	WELDED DRYER TUNNEL	1	_						
28	Z316301000	TUNEL SECADO SOLDADO	WELDED DRYER TUNNEL	_	1						

MOD.	LAVAVAJILLAS MODULARES MODULAR DISHWASHERS	ZONA	TUNEL DE SECADO / DRYING TUNNEL	PLANO	C-2157 C-2158

ITEM	CODIGO	DENOMINACION	TEXTO	TUNEL DE SECADO 600	TUNEL DE SECADO 800						NOTAS
29	Z203047000	SOPORTE TERMOSTATOS	THERMOSTAT SUPPORT	1	1						
	Q232040000	ARANDELA A6	WASHER A6	2	2						
	Q162040000	TUERCA EXAGONAL M6	HEXAGONAL NUT M6	2	2						
	Q152024000	TORNILLO AVELLANADO M4X8	COUNTERSUNK BOLT M4x8	2	2						
30	Z203060000	TERMOSTATO 150ºC	THERMOSTAT 150ºC	1	_						
30	Z276365000	TERMOSTATO 150ºC	THERMOSTAT 150ºC	_	1						
31	Z276318000	TAPA SALIDA SECADO	DRYER OUTPUT LID	1	_						
31	Z316388000	TAPA SALIDA SECADO	DRYER OUTPUT LID	_	2						
	Q302022000	ARANDELA 16X6X1.2 A.304	WASHER 16X6X1.2 A.304	2	4						
	Q152046000	TORNILLO EXAGON. CON CUELLO	HEXAGONAL BOLT. WITH NECK	2	4						
32	Z276394000	SOPORTE VENTILADOR	FAN BRACKET	1	_						
32		SOPORTE VENT. (INCORPORADO)	FAN SUPPORT (BUILT-IN)	_	1						
	Q082005000	TORNILLO CHAP. Ø4,2X13 4.2X13	PLATE BOLT Ø4.2X13 4.2X13	4	_						
	Q262040000	ARANDELA GROW. A6 A.304	WASHER GROW. A6 A.304	6	_						
	Q162040000	TUERCA EXAGONAL M6	HEXAGONAL NUT M6	6	_						
33	Z316412000	VENTILADOR CENTRIFUGO	SPIN FAN	1	_						
33	Z316331000	VENT CENT. (220/380) V 50-60 HZ	CENT. FAN (220/380) V 50-60 HZ	_	1						
34	Z276375000	AMARRE VENTILADOR	FAN FASTENING	2	_						
35	Z276376000	LATERAL DCHO. CAJA RESISTEN.	RIGHT SIDE RESIST. BOX	1	_						ELIMINADO 04.01.10
35	Z276339000	LATERAL DCHO. CAJA RESISTEN.	RIGHT SIDE RESIST. BOX	1	_						INTRODUCIDO 04.01.10
35	Z316336000	LATERAL DCHO. CAJA RESISTEN.	RIGHT SIDE RESIST. BOX	_	1						
36	Z276330000	POSTERIOR CAJA RESISTENCIA	REAR RESISTOR BOX	1	_						ELIMINADO 04.01.10
36	Z276337000	POSTERIOR CAJA RESISTENCIA	REAR RESISTOR BOX	1	_						INTRODUCIDO 04.01.10
36	Z316320000	POSTERIOR CAJA RESISTENCIA	REAR RESISTOR BOX	_	1						ELIMINADO 04.01.10
36	Z316347000	POSTERIOR CAJA RESISTENCIAS	RESISTOR BOX REAR	_	1						INTRODUCIDO 04.01.10
	Q012042000	TORNILLO EXAGONAL M6X15 A304	HEXAGONAL BOLT M6x15 A304	14	14						
S/Nº	Z316381000	CABLEADO SECADO	DRYER WIRING	1	1						
S/Nº	Z316382000	CABLEADO AUXILIAR SECADO	AUX. DRYER WIRING	1	_						
S/Nº	Z316393000	CABLEADO AUXILIAR SECADO	AUX. DRYER WIRING	_	1						ELIMINADO 15.07.10
S/Nº	Z316353000	CABLEADO SECADO FI-460 FI-550	DRYER WIRING FI-460 FI-550	_	1						INTRODUCIDO 15.07.10
S/Nº	Z316353000	CABLEADO SECADO	DRYER WIRING	_	1						

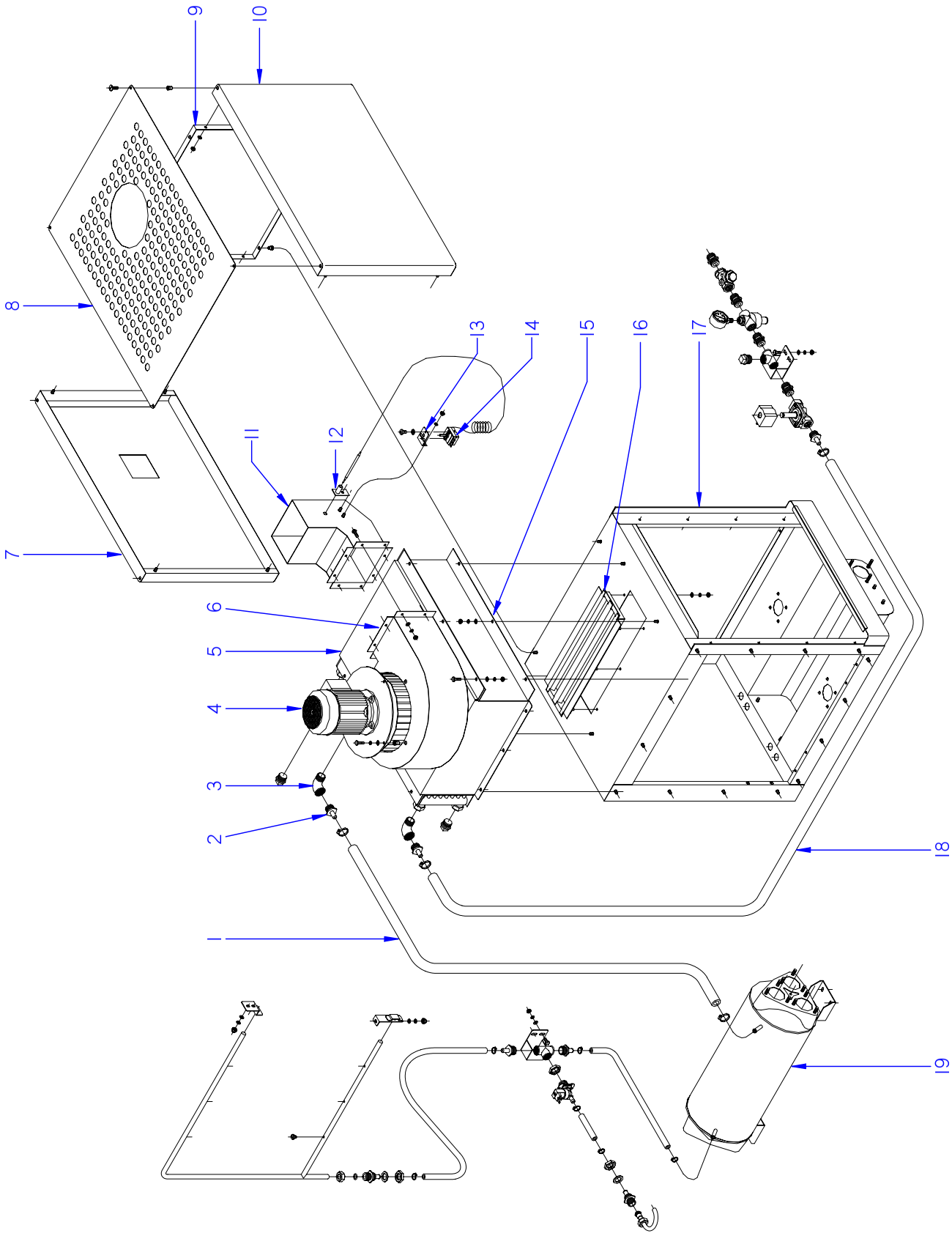

ITEM MARCADO EN COLOR = REPUESTO RECOMENDADO
COLOURED ITEM = RECOMMENDED SPARE PART

N plano	Firma	Fecha	Aparato		Lamina	
C-2159		2008-11	RECUPERADOR DE ENERGIA LAVAVAJILLAS MODULARES		20	Fagor Industrial S.Coop. Onate

MOD.	LAVAVAJILLAS MODULARES MODULAR DISHWASHERS	ZONA	RECUPERADOR DE ENERGIA / ENERGY RECOVERY	PLANO	C-2159

ITEM	CODIGO	DENOMINACION	TEXTO	RECUERADOR DE ENERGIA							NOTAS
1	3715300000	TUBO GOMA 14x24	RUBBER PIPE 14x24	1							
	Q881304000	ABRAZADERA 20-32	CLAMP 20-32	2							
2	Z316419000	EMPALME 3/4	CONNECTION 3/4"	2							
3	Z718421000	CODO M-H 3/4" LATON	L-BEND M-H 3/4" BRASS	2							
4	Z516421000	VENTILADOR CENTRIFUGO	SPIN FAN	1							
	Z311103000	TAPON 3/4"	LID 3/4"	2							
	Q262040000	ARANDELA GROW. A6 A304	WASHER GROW. A6 A304	6							
	Q162040000	TUERCA EXAGONAL M6	HEXAGONAL NUT M6	6							
	Q232040000	ARANDELA A6	WASHER A6	6							
5	Z316411000	CUBIERTA BATERIA	BATTERY COVER	1							
	Q232040000	ARANDELA A6	WASHER A6	7							
	Q262040000	ARANDELA GROW. A6 A304	WASHER GROW. A6 A304	7							
	Q162040000	TUERCA EXAGONAL M6	HEXAGONAL NUT M6	7							
	Q221343000	REMACHE EXAGONAL M6	HEXAGONAL RIVET M6	4							
6	Z316456000	CUBIERTA VENTOLA COMPLETA	COMPLETE VENTOLA COVER	1							
	Q232040000	ARANDELA A6	WASHER A6	10							
	Q012042000	TORNILLO EXAGONAL M6X15 A304	HEXAGONAL BOLT M6x15 A304	10							
	Q262040000	ARANDELA GROW. A6 A304	WASHER GROW. A6 A304	6							
	Q162040000	TUERCA EXAGONAL M6	HEXAGONAL NUT M6	6							
7	Z316420000	POSTERIOR CUBIERTA COMPLET.	COMPLETE REAR COVER	1							
8	Z316423000	TAPA CUBIERTA	COVER LID	1							
	Q232040000	ARANDELA A6	WASHER A6	12							
	Q262040000	ARANDELA GROW. A6 A304	WASHER GROW. A6 A304	12							
	Q162040000	TUERCA EXAGONAL M6	HEXAGONAL NUT M6	12							
	Q152017000	TORNILLO AMARRE M6X13 A304	FASTENING BOLT M6X13 A304	8							
9	Z316422000	LATERAL CUBIERTA	SIDE COVER	2							
10	Z316453000	ANTERIOR CUBIERTA COMPLETA	COMPLETE FRONT COVER	1							
11	Z316413000	SALIDA AIRE RECUPER. ENERGIA	ENERGY RECOVERY AIR OUTPU	1							
12	Z276331000	VAINA TS. COMPLETA	COMPLETE TS. SHELL	1							

MOD.	LAVAVAJILLAS MODULARES MODULAR DISHWASHERS	ZONA	RECUPERADOR DE ENERGIA / ENERGY RECOVERY	PLANO	C-2159

ITEM	CODIGO	DENOMINACION	TEXTO	RECUERADOR DE ENERGIA							NOTAS
13	Z850111000	SOPORTE TERMOSTATO	THERMOSTAT SUPPORT	1							
	Q262040000	ARANDELA GROW. A6 A304	WASHER GROW. A6 A304	2							
	Q162040000	TUERCA EXAGONAL M6	HEXAGONAL NUT M6	2							
14	Z203014000	TERMOSTATO CALDERIN	WASH DRUM THERMOSTAT	1							ELIMINADO 30.11.2012
14	12040858	TERMOSTATO CALDERIN	WASH DRUM THERMOSTAT	1							INTRODUCIDO 30.11.2012
	Q242020000	ARANDELA ABANICO A4 A.304	FAN WASHER A4 A.304	2							
	Q152024000	TORNILLO AVELLANADO M4X8	COUNTERSUNK BOLT M4x8	4							
	Q151320000	TOR. ALOMADO M4X6 H.ZINCADO	CURVED SCREW M4X6 H. ZINC	2							
15	Z316410000	BATERIA COMPLETA	COMPLETE BATTERY	1							
16	Z316403000	REJILLA ASPIR.VAHOS COMP.	COMP. STEAM INTAKE GRILLE	1							
	Q232040000	ARANDELA A6	WASHER A6	6							
	Q262040000	ARANDELA GROW. A6 A304	WASHER GROW. A6 A304	6							
	Q162040000	TUERCA EXAGONAL M6	HEXAGONAL NUT M6	6							
17	Z316400000	CAJA PREACLARADO SOLDADA	WELDED PRERINSE BOX	1							
	Z316452000	CABLEADO RECUPERADOR	RECOVERY WIRING	1							
18	3715300000	TUBO GOMA 14x24	RUBBER PIPE 14x24	1							
	Q881304000	ABRAZADERA 20-32	CLAMP 20-32	2							
19	Z316426000	CUERPO COMPLETO	COMPLETE BODY	1							
S/Nº	Z102305000	ELECTROVALVULA 032U 2261-00	SOLENOID 032U 2261-00	1							

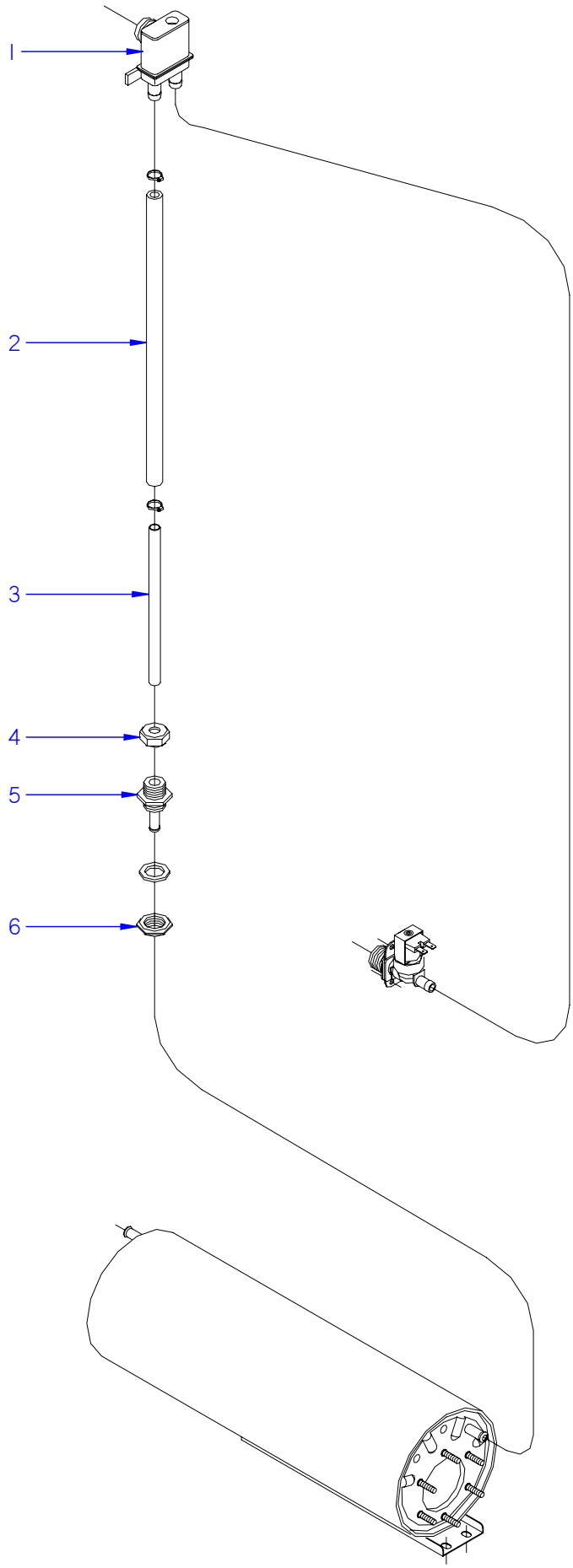

ITEM MARCADO EN COLOR = REPUESTO RECOMENDADO
COLOURED ITEM = RECOMMENDED SPARE PART

N plano	Firma	Fecha	Aparato		Lamina	
C-2160		2008-11	VALVULA ANTIRRETORNO LAVAVAJILLAS MODULARES A.R.		21	Fagor Industrial S.Coop. Oñate

MOD.	LAVAVAJILLAS MODULARES MODULAR DISHWASHERS	ZONA	VALVULA ANTIRRETORNO / NON-RETURN VALVE	C-2160

ITEM	CODIGO	DENOMINACION	TEXTO	FI-280	FI-370	FI-460	FI-550				
1	Z231106000	VALVULA ANTIRRETORNO	NON-RETURN VALVE	1	1	1	1				
	Z271111000	SOPORTE VALVULA A.R.COMPLETO	COMPLETE VALVE SUPPORT A.R	1	1	1	1				
	Z271110000	SOPORTE INFERIOR A.R.	LOWER SUPPORT A.R.	1	1	1	1				
	Z271114000	CUBIERTA A.R.	COVER A.R.	1	1	1	1				
2	3676900000	TUBO GOMA NEGRA D 17*10	BLACK RUBBER PIPE 17*10	2	2	2	2				
	Q881302000	ABRAZADERA 12-20	CLAMP 12-20	4	4	4	4				
3	Z711114000	TUBO EMPALME	CONNECTION PIPE	2	2	2	2				
4	Q223107000	TUERCA M.20x2.5	NUT M.20X2.5	2	2	2	2				
5	Z711904000	PASAMUROS ACLARADO	RINSE BUSHING	2	2	2	2				
	Q307032000	JUNTA 32X21X3	JOINT 32X21X3	2	2	2	2				
6	Q223023000	TUERCA EXAGONAL 5-8 LATON	HEX NUT 5-8 BRASS	2	2	2	2				

MOD.	LAVAVAJILLAS MODULARES MODULAR DISHWASHERS	ZONA	PIEZAS ESPEC. PARA LA VERSION SIN NEUTRO SPECIF.PARTS FOR VERSION WITHOUT NEUTRAL	PLANO	

ITEM	CODIGO	DENOMINACION	TEXTO	FI-160	FI-200						NOTAS
	Z273039000	CONDENSADOR 10MF 550V	CONDENSER 10MF 550V	2	2						
	Z273038000	CABLEADO TRANSF. SIN NEUTRO	TRANSF. WIRING W/O NEUTRAL	1	1						
	P503059000	TRANSFORMADOR 440V.S.N.	TRANSFORMER 440V.S.N.	1	1						

MOD.	LAVAVAJILLAS MODULARES MODULAR DISHWASHERS	ZONA	PIEZAS A ELIMINAR E INTRODUCIR VERSION H'' PARTS TO BE ELIMINATED AND INTRODUCED	PLANO	

ITEM	CODIGO	DENOMINACION	TEXTO	FI-200	FI-200 H	ECO-200	ECO-200 H				NOTAS
		PIEZAS A ELIMINAR	**PARTS TO BE REMOVED**								
10	Z105013000	PIÑON	PINION	1	_	1	_				PLANO C-2123
12	Z121741000	RESISTENCIA 9600 230V.	RESISTOR 9600 230V	1	_	_	_				PLANO C-2125
		PIEZAS A INTRODUCIR	**PARTS TO BE INCLUDED**								
10	Z275007000	PIÑON	PINION	_	1	_	1				PLANO C-2123
12	Z129502000	RESISTENCIA 220-240 V.	RESISTOR 220-240 V.	_	1	_	_				PLANO C-2125

MOD.	LAVAVAJILLAS MODULARES MODULAR DISHWASHERS	ZONA	VARIOS / VARIOUS	PLANO	

ITEM	CODIGO	DENOMINACION	TEXTO	FI-280	FI-370	FI-460	FI-550				
	Z316102000	FOLLETO INSTRUCCIONES	INSTRUCTION LEAFLET.	1	1	1	1				
	Z313074000	ESQUEMA TEÓRICO 280	THEORET. DIAGRAM 280	1	_	_	_				ELIMINADO 18.05.2012
	Z333041000	ESQUEMA TEÓRICO 370	THEORET. DIAGRAM 370	_	1	_	_				ELIMINADO 18.05.2012
	Z353042000	ESQUEMA TEÓRICO 460	THEORET. DIAGRAM 460	_	_	1	_				ELIMINADO 18.05.2012
	Z373043000	ESQUEMA TEÓRICO 550	THEORET. DIAGRAM 550	1	1	1					INTRODUCIDO 18.05.2012
	Z373043000	ESQUEMA TEÓRICO 550	THEORET. DIAGRAM 550	_	_	_	1				PLANO HC-17416
	Z313072000	ESQUEMA MONTAJE IZDO	LEFT ASSEMBLY DIAGRAM	1	1	1	1				PLANO HE-15487
	Z313073000	ESQUEMA MONTAJE DCHO	RIGHT ASSEMBLY DIAGRAM	1	1	1	1				PLANO HE-15488
	Z313070000	LEYENDA ESQUE.TEOR.COMP.MODU	LEGEND COMP. MODUL. THEOR.	1	1	1	1				PLANO HC-17259
	Z313071000	INSTAL. ELECTR. BASE MODULAR	MODULAR BASE ELEC. INSTALL.	1	1	1	1				
	Z333040000	CABLEADO FI-370	WIRING FI-370	_	1	_	_				
	Z353041000	CABLEADO FI-460	WIRING FI-460	_	_	1	_				
	Z373042000	CABLEADO FI-550	WIRING FI-550	_	_	_	1				
	Z313062000	CABLEADO FUERZA BASE	BASE POWER WIRING	1	1	1	1				
	Z313063000	CABLEADO CALDERIN ELECTR.	ELECTR. BOILER WIRING	1	1	1	1				
	Z283022000	CABLE TIERRA M.BOMBA	EARTH WIRE M. PUMP	1	1	1	1				
	Z273016000	MICRO FIN DE CARRERA	LIMIT SWITCH MICRO	1	1	1	1				
	Z273085000	CABLEADO SECCIONADOR 125A	SECTIONATOR 125A WIRING	1	1	1	_				INTRODUCIDO 01.12.09
	Z273086000	CABLEADO SECCIONADOR 160A	SECTIONATOR 160A WIRING	_	_	_	1				INTRODUCIDO 04.01.10

MOD.	LAVAVAJILLAS MODULARES MODULAR DISHWASHERS	ZONA	VARIOS / VARIOUS	PLANO	

ITEM	CODIGO	DENOMINACION	TEXTO	ECO-280	ECO-370	ECO-460	ECO-550				
	Z326102000	FOLLETO INSTRUCCIONES	INSTRUCTION LEAFLET.	1	1	1	1				
	Z323020000	ESQUEMA TEÓRICO ECO 280	THEORET. DIAGRAM ECO 280	1	_	_	_				ELIMINADO 18.05.2012
	Z343021000	ESQUEMA TEÓRICO ECO 370	THEORET. DIAGRAM ECO 370	_	1	_	_				ELIMINADO 18.05.2012
	Z363020000	ESQUEMA TEÓRICO ECO 460	THEORET. DIAGRAM ECO 460	_	_	1	_				ELIMINADO 18.05.2012
	Z383023000	ESQUEMA TEÓRICO ECO 550	THEORET. DIAGRAM ECO 550	_	_	_	1				ELIMINADO 18.05.2012
	Z373043000	ESQUEMA TEÓRICO 550	THEORET. DIAGRAM 550	1	1	1	1				INTRODUCIDO 18.05.2012
	Z313072000	ESQUEMA MONTAJE IZDO	LEFT ASSEMBLY DIAGRAM	1	1	1	1				PLANO HE-15487
	Z313073000	ESQUEMA MONTAJE DCHO	RIGHT ASSEMBLY DIAGRAM	1	1	1	1				PLANO HE-15488
	Z313070000	LEYENDA ESQUE.TEOR.COMP.MOD	LEGEND COMP. MODUL. THEOR	1	1	1	1				PLANO HC-17259
	Z313071000	INSTAL. ELECTR. BASE MODULAR	MODULAR BASE ELEC. INSTALL.	1	1	1	1				
	Z333040000	CABLEADO FI-370	WIRING FI-370	_	1	_	_				
	Z353041000	CABLEADO FI-460	WIRING FI-460	_	_	1	_				
	Z373042000	CABLEADO FI-550	WIRING FI-550	_	_	_	1				
	Z313062000	CABLEADO FUERZA BASE	BASE POWER WIRING	1	1	1	1				
	Z323001000	CABLEADO ECO	ECO WIRING	1	1	1	1				
	Z283022000	CABLE TIERRA M.BOMBA	EARTH WIRE M. PUMP	1	1	1	1				
	Z273016000	MICRO FIN DE CARRERA	LIMIT SWITCH MICRO	1	1	1	1				
	Z273084000	CABLEADO SECCIONADOR 63A	SECTIONATOR 63A WIRING	1	1	_	_				INTRODUCIDO 01.12.09
	Z273085000	CABLEADO SECCIONADOR 125A	SECTIONATOR 125A WIRING	_	_	1	1				INTRODUCIDO 01.12.09

MOD.	LAVAVAJILLAS MODULARES MODULAR DISHWASHERS	ZONA	PIEZAS A INTRODUCIR EN LA VERSION 220 V. PARTS A INTRODUCED IN VERSION 220 V.	PLANO	

ITEM	CODIGO	DENOMINACION	TEXTO	FI-280	FI-370	FI-460	FI-550				NOTAS
		PIEZAS A INTRODUCIR EN LA VERSION 220 V.									
15	Z513081000	SECCIONAD. 4P. 160A SIEMENS	SECTIONAT. 4P.160A SIEMENS	1	_	_	_				INTRODUCIDO 04.01.10
15	Z513082000	SECCIONAD. 4P. 250A SIEMENS	SECTIONAT. 4P.250A SIEMENS	_	1	1	1				INTRODUCIDO 04.01.10
S/Nº	Z513083000	BORNE DISTRIBUIDOR 70 MM2	DISTRIBUI. 70 MM2 TERMINAL	1	_	_	_				INTRODUCIDO 04.01.10
S/Nº	Z513084000	BORNE DISTRIBUIDOR 120 MM2	DISTRIBUI. 120 MM2 TERMINAL	_	3	3	3				ELIMINADO 09.07.10
S/Nº	Z513085000	BORNA DIST. 400A 185mm2 1vía UL	DISTRIBUI. 400A 185mm2 1vía UL	_	3	3	3				INTRODUCIDO 09.07.10
	Z273086000	CABLEADO SECCIONADOR 160A	SECTIONATOR 160A WIRING	1	_	_	_				INTRODUCIDO 04.01.10
	Z273087000	CABLEADO SECCIONADOR 250A	SECTIONATOR 2560A WIRING	_	1	1	1				INTRODUCIDO 04.01.10

MOD.	LAVAVAJILLAS MODULARES MODULAR DISHWASHERS	ZONA	PIEZAS A INTRODUCIR EN LA VERSION 220 V. PARTS A INTRODUCED IN VERSION 220 V.	PLANO	

ITEM	CODIGO	DENOMINACION	TEXTO	ECO-280	ECO-370	ECO-460	ECO-550				NOTAS
		PIEZAS A INTRODUCIR EN LA VERSION 220 V.									
15	P663014000	SECCIONADOR 3P.125A SIEMENS	SECTIONATOR 3P.125A SIEMENS	1	1	1	_				INTRODUCIDO 04.01.10
15	Z513081000	SECCIONAD. 4P. 160A SIEMENS	SECTIONAT. 4P.160A SIEMENS	_	_	_	1				INTRODUCIDO 04.01.10
S/Nº	Z513083000	BORNE DISTRIBUIDOR 70 MM2	DISTRIBUI. 70 MM2 TERMINAL	1	1	1	1				INTRODUCIDO 04.01.10
S/Nº	P663015000	BLOQUE 4º P. SECCIONAD. 125A S.	SECTION. 125A 4º POLO SIEMEN	1	1	1	_				INTRODUCIDO 04.01.10
	Z273085000	CABLEADO SECCIONADOR 125A	SECTIONATOR 125A WIRING	1	1	1	_				INTRODUCIDO 01.12.09
	Z273086000	CABLEADO SECCIONADOR 160A	SECTIONATOR 160A WIRING	_	_	_	1				INTRODUCIDO 01.12.09

FI - 280

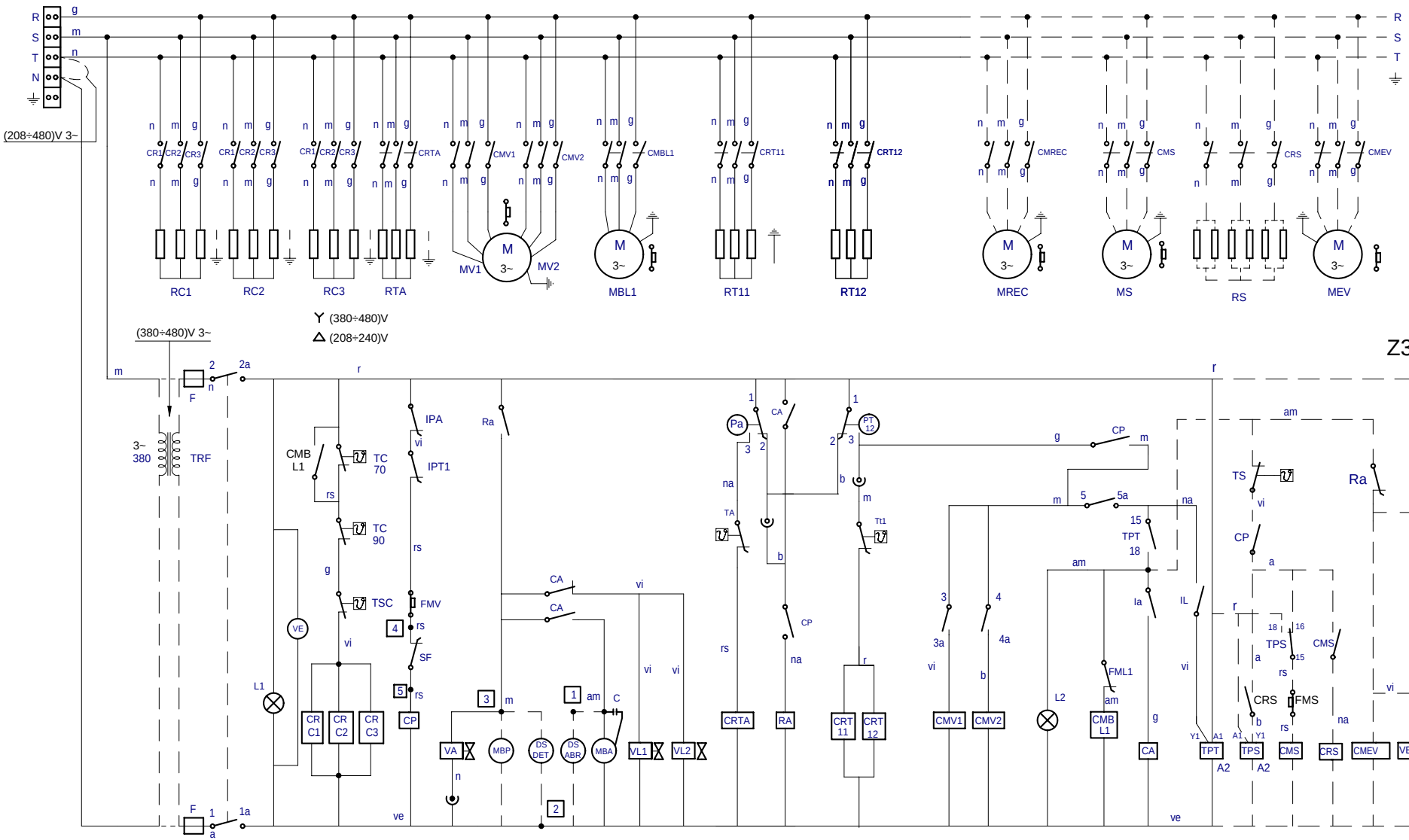

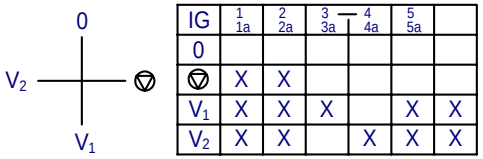

IG	1 1a	2 2a	3 3a	4 4a	5 5a	
0						
▽	X	X				
V1	X	X	X		X	X
V2	X	X		X	X	X

COLOR		ESPAÑOL	FRANÇAIS	ENGLISH	DEUTSCH	ITALIANO
		COLOR	*COULEUR*	*COLOUR*	*FARBEN*	*COLORE*
a	=	Azul	Bleu	Blue	Blau	Blu
am	=	Amarillo	Jaune	Yellow	Gelb	Giallo
am/ve	=	Amarillo/verde	Jaune / vert	Yellow / green	Gelb/grün	Giallo/verde
b	=	Blanco	Blanc	White	Weiß	Bianco
g	=	Gris	Gris	Grey	Grau	Grigio
m	=	Marrón	Marron	Brown	Braun	Marrone

COLOR		ESPAÑOL	FRANÇAIS	ENGLISH	DEUTSCH	ITALIANO
		COLOR	*COULEUR*	*COLOUR*	*FARBEN*	*COLORE*
n	=	Negro	Noir	Black	Schwarz	Nero
na	=	Naranja	Orange	Orange	Orange	Arancio
r	=	Rojo	Rouge	Red	Rot	Rosso
rs	=	Rosa	Rose	Pink	Rosa	Roseo
ve	=	Verde	Vert	Green	Grün	Verde
vi	=	Violeta	Violet	Purple	Violett	Viola

ECO-280

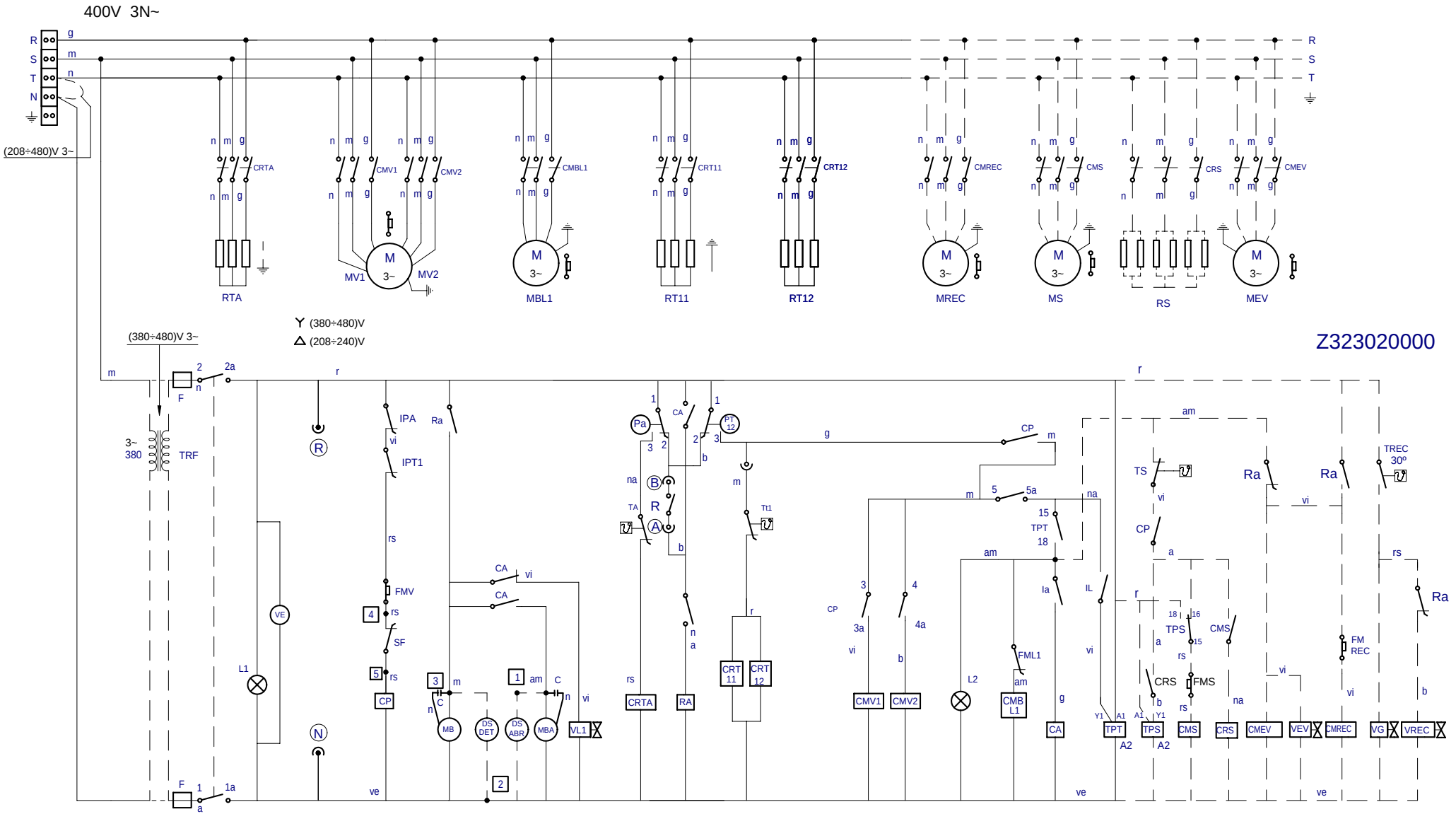

IG	1 1a	2 2a	3 3a	4 4a	5 5a	
0						
▽	X	X				
V_1	X	X	X		X	X
V_2	X	X		X	X	X

COLOR		ESPAÑOL	FRANÇAIS	ENGLISH	DEUTSCH	ITALIANO
		COLOR	*COULEUR*	*COLOUR*	*FARBEN*	*COLORE*
a	=	Azul	Bleu	Blue	Blau	Blu
am	=	Amarillo	Jaune	Yellow	Gelb	Giallo
am/ve	=	Amarillo/verde	Jaune / vert	Yellow / green	Gelb/grün	Giallo/verde
b	=	Blanco	Blanc	White	Weiß	Bianco
g	=	Gris	Gris	Grey	Grau	Grigio
m	=	Marrón	Marron	Brown	Braun	Marrone

COLOR		ESPAÑOL	FRANÇAIS	ENGLISH	DEUTSCH	ITALIANO
		COLOR	*COULEUR*	*COLOUR*	*FARBEN*	*COLORE*
n	=	Negro	Noir	Black	Schwarz	Nero
na	=	Naranja	Orange	Orange	Orange	Arancio
r	=	Rojo	Rouge	Red	Rot	Rosso
rs	=	Rosa	Rose	Pink	Rosa	Roseo
ve	=	Verde	Vert	Green	Grün	Verde
vi	=	Violeta	Violet	Purple	Violett	Viola

HC-17411-1

FI-370

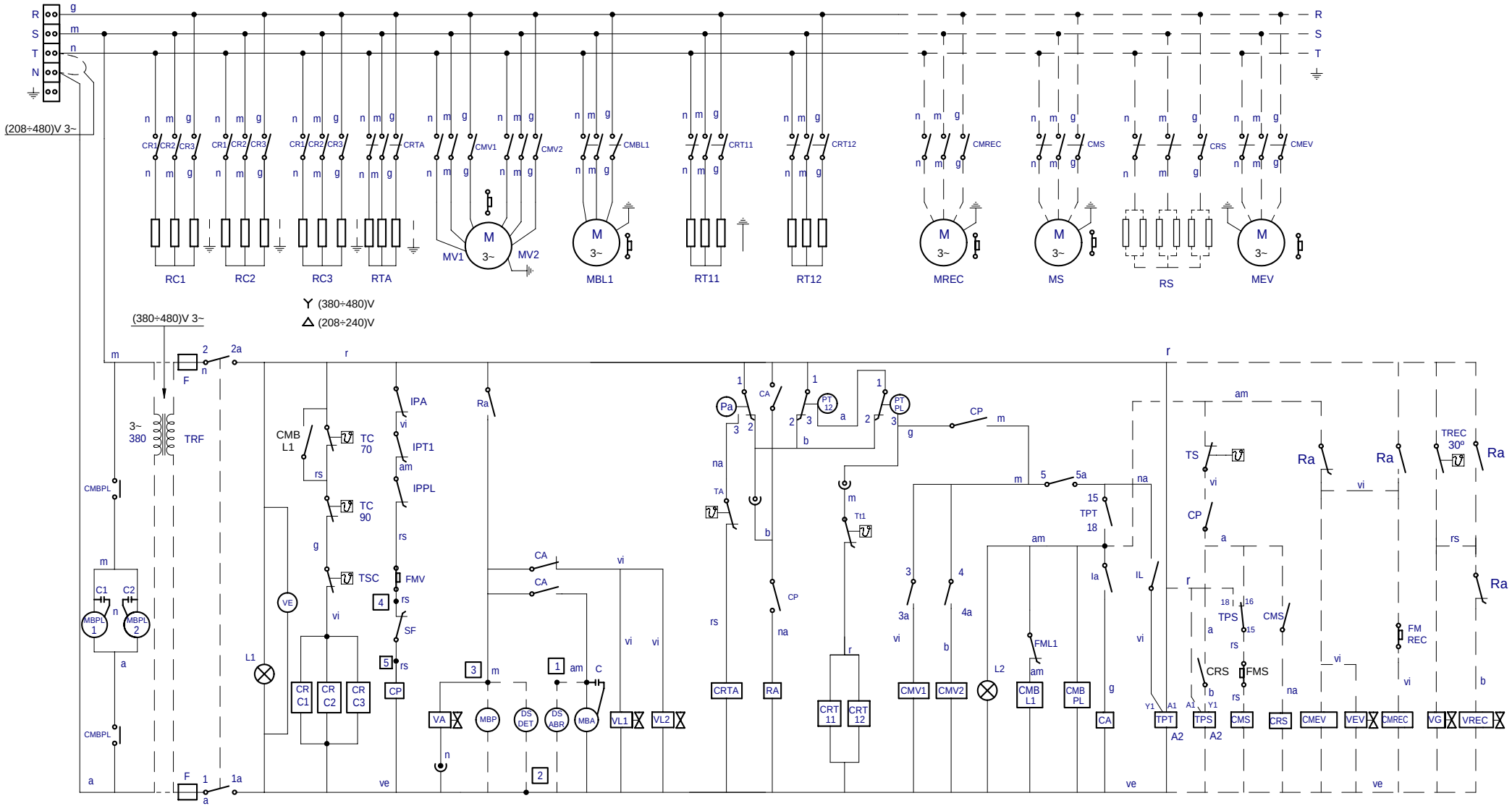

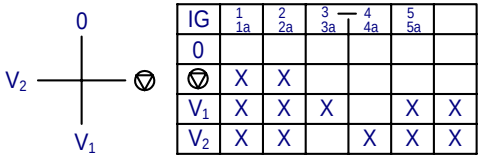

IG	1 1a	2 2a	3 3a	4 4a	5 5a	
0						
▽	X	X				
V1	X	X	X		X	X
V2	X	X		X	X	X

COLOR		ESPAÑOL	FRANÇAIS	ENGLISH	DEUTSCH	ITALIANO
		COLOR	*COULEUR*	*COLOUR*	*FARBEN*	*COLORE*
a	=	Azul	Bleu	Blue	Blau	Blu
am	=	Amarillo	Jaune	Yellow	Gelb	Giallo
am/ve	=	Amarillo/verde	Jaune / vert	Yellow / green	Gelb/grün	Giallo/verde
b	=	Blanco	Blanc	White	Weiß	Bianco
g	=	Gris	Gris	Grey	Grau	Grigio
m	=	Marrón	Marron	Brown	Braun	Marrone

COLOR		ESPAÑOL	FRANÇAIS	ENGLISH	DEUTSCH	ITALIANO
		COLOR	*COULEUR*	*COLOUR*	*FARBEN*	*COLORE*
n	=	Negro	Noir	Black	Schwarz	Nero
na	=	Naranja	Orange	Orange	Orange	Arancio
r	=	Rojo	Rouge	Red	Rot	Rosso
rs	=	Rosa	Rose	Pink	Rosa	Roseo
ve	=	Verde	Vert	Green	Grün	Verde
vi	=	Violeta	Violet	Purple	Violett	Viola

Z333041000

ECO-370

400V 3N~

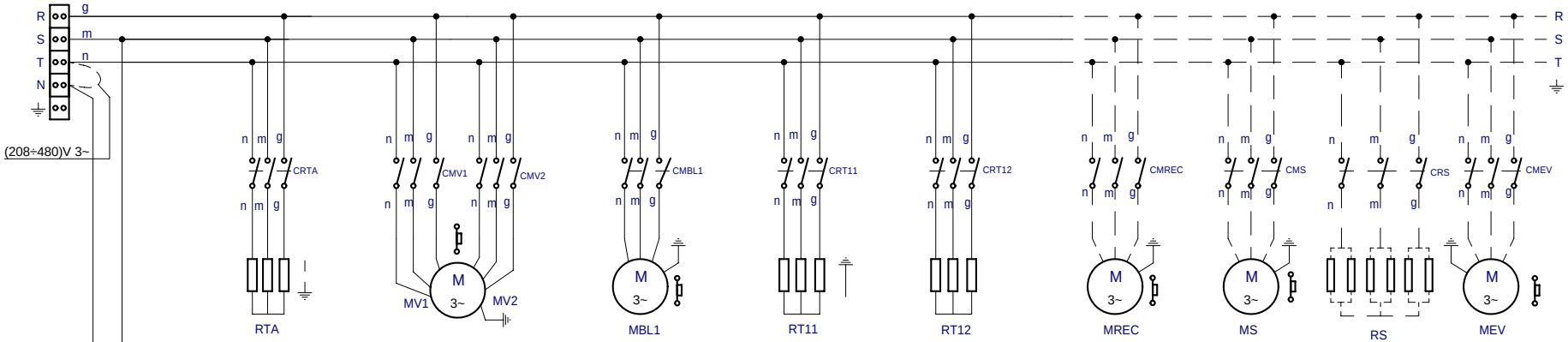

Y (380÷480)V
Δ (208÷240)V

Z343021000

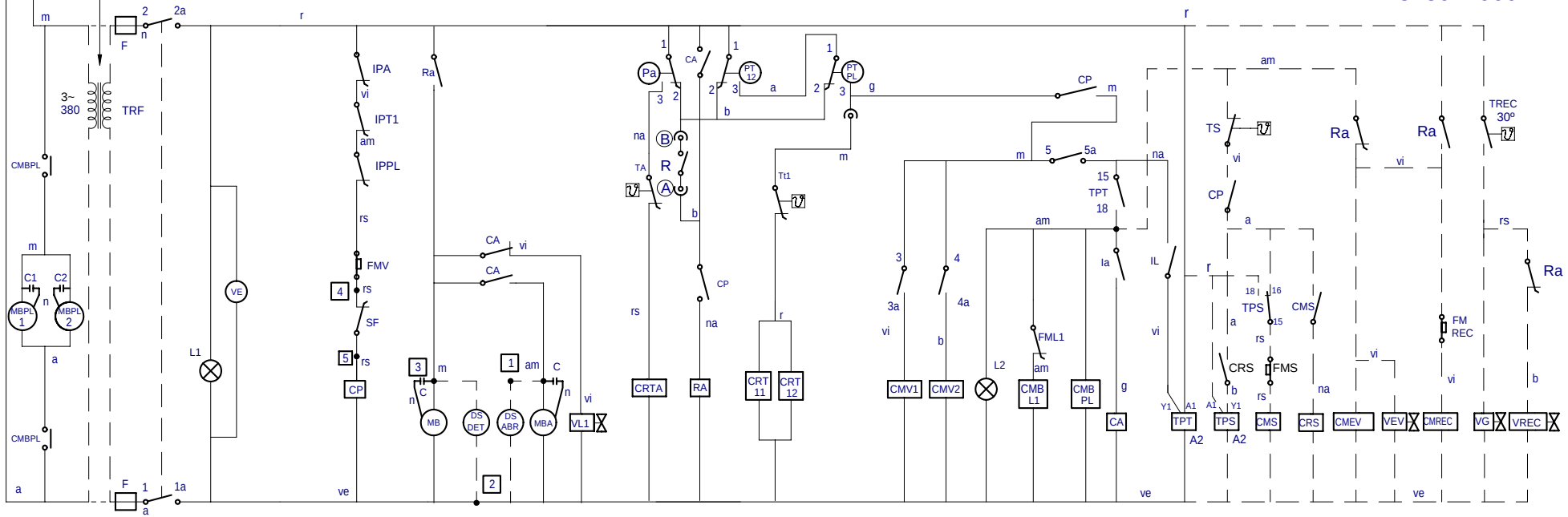

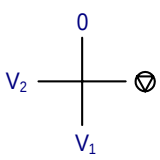

IG	1 1a	2 2a	3 3a	4 4a	5 5a	
0						
▽	X	X				
V1	X	X	X		X	X
V2	X	X		X	X	X

COLOR		ESPAÑOL	FRANÇAIS	ENGLISH	DEUTSCH	ITALIANO
		COLOR	*COULEUR*	*COLOUR*	*FARBEN*	*COLORE*
a	=	Azul	Bleu	Blue	Blau	Blu
am	=	Amarillo	Jaune	Yellow	Gelb	Giallo
am/ve	=	Amarillo/verde	Jaune / vert	Yellow / green	Gelb/grün	Giallo/verde
b	=	Blanco	Blanc	White	Weiß	Bianco
g	=	Gris	Gris	Grey	Grau	Grigio
m	=	Marrón	Marron	Brown	Braun	Marrone

COLOR		ESPAÑOL	FRANÇAIS	ENGLISH	DEUTSCH	ITALIANO
		COLOR	*COULEUR*	*COLOUR*	*FARBEN*	*COLORE*
n	=	Negro	Noir	Black	Schwarz	Nero
na	=	Naranja	Orange	Orange	Orange	Arancio
r	=	Rojo	Rouge	Red	Rot	Rosso
rs	=	Rosa	Rose	Pink	Rosa	Roseo
ve	=	Verde	Vert	Green	Grün	Verde
vi	=	Violeta	Violet	Purple	Violett	Viola

HC-17413 -01

FI - 460

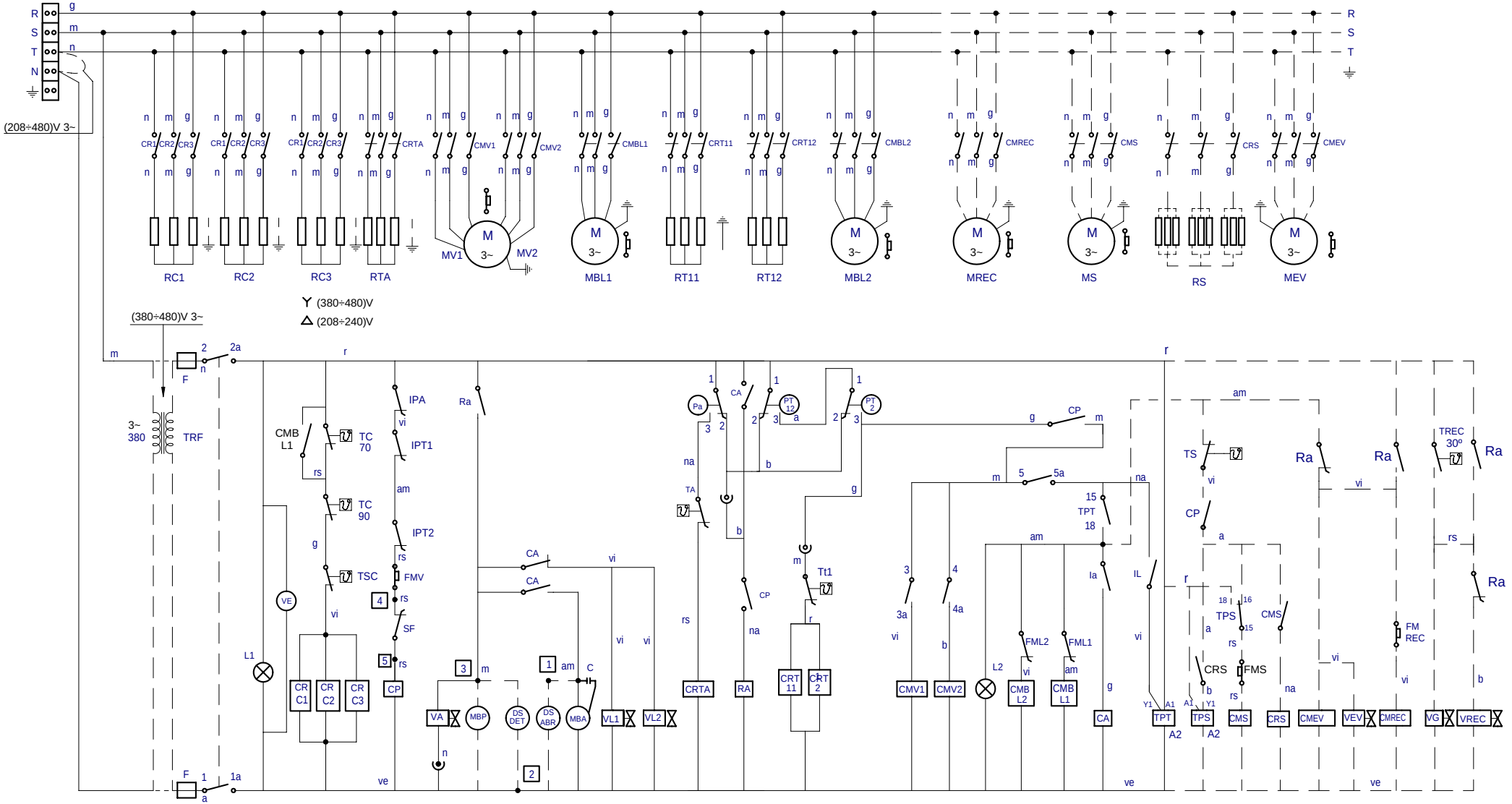

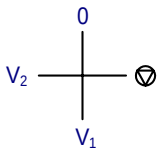

IG	1 1a	2 2a	3 3a	4 4a	5 5a	
0						
▽	X	X				
V1	X	X	X		X	X
V2	X	X		X	X	X

COLOR		ESPAÑOL	FRANÇAIS	ENGLISH	DEUTSCH	ITALIANO
		COLOR	*COULEUR*	*COLOUR*	*FARBEN*	*COLORE*
a	=	Azul	Bleu	Blue	Blau	Blu
am	=	Amarillo	Jaune	Yellow	Gelb	Giallo
am/ve	=	Amarillo/verde	Jaune / vert	Yellow / green	Gelb/grün	Giallo/verde
b	=	Blanco	Blanc	White	Weiß	Bianco
g	=	Gris	Gris	Grey	Grau	Grigio
m	=	Marrón	Marron	Brown	Braun	Marrone

COLOR		ESPAÑOL	FRANÇAIS	ENGLISH	DEUTSCH	ITALIANO
		COLOR	*COULEUR*	*COLOUR*	*FARBEN*	*COLORE*
n	=	Negro	Noir	Black	Schwarz	Nero
na	=	Naranja	Orange	Orange	Orange	Arancio
r	=	Rojo	Rouge	Red	Rot	Rosso
rs	=	Rosa	Rose	Pink	Rosa	Roseo
ve	=	Verde	Vert	Green	Grün	Verde
vi	=	Violeta	Violet	Purple	Violett	Viola

Z353042000

ECO-460

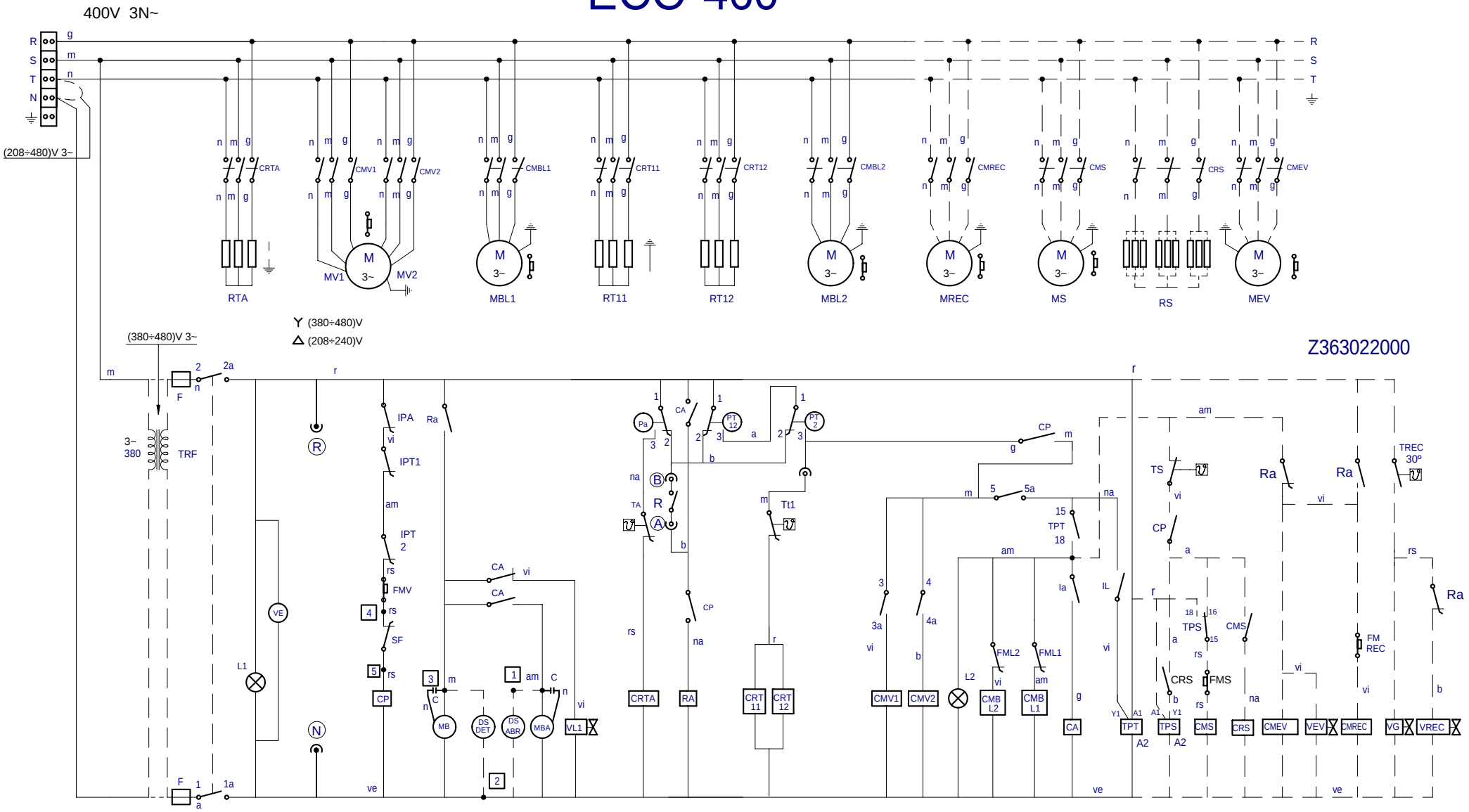

IG	1 1a	2 2a	3 3a	4 4a	5 5a	
0						
▽	X	X				
V_1	X	X	X		X	X
V_2	X	X		X	X	X

0, V_2, ▽, V_1

COLOR		ESPAÑOL	FRANÇAIS	ENGLISH	DEUTSCH	ITALIANO
		COLOR	*COULEUR*	*COLOUR*	*FARBEN*	*COLORE*
a	=	Azul	Bleu	Blue	Blau	Blu
am	=	Amarillo	Jaune	Yellow	Gelb	Giallo
am/ve	=	Amarillo/verde	Jaune / vert	Yellow / green	Gelb/grün	Giallo/verde
b	=	Blanco	Blanc	White	Weiß	Bianco
g	=	Gris	Gris	Grey	Grau	Grigio
m	=	Marrón	Marron	Brown	Braun	Marrone

COLOR		ESPAÑOL	FRANÇAIS	ENGLISH	DEUTSCH	ITALIANO
		COLOR	*COULEUR*	*COLOUR*	*FARBEN*	*COLORE*
n	=	Negro	Noir	Black	Schwarz	Nero
na	=	Naranja	Orange	Orange	Orange	Arancio
r	=	Rojo	Rouge	Red	Rot	Rosso
rs	=	Rosa	Rose	Pink	Rosa	Roseo
ve	=	Verde	Vert	Green	Grün	Verde
vi	=	Violeta	Violet	Purple	Violett	Viola

HC-17415-01

400V 3N~ FI 280, FI 370, FI 460, FI 550 ECO 280, ECO 370, ECO 460, ECO 550

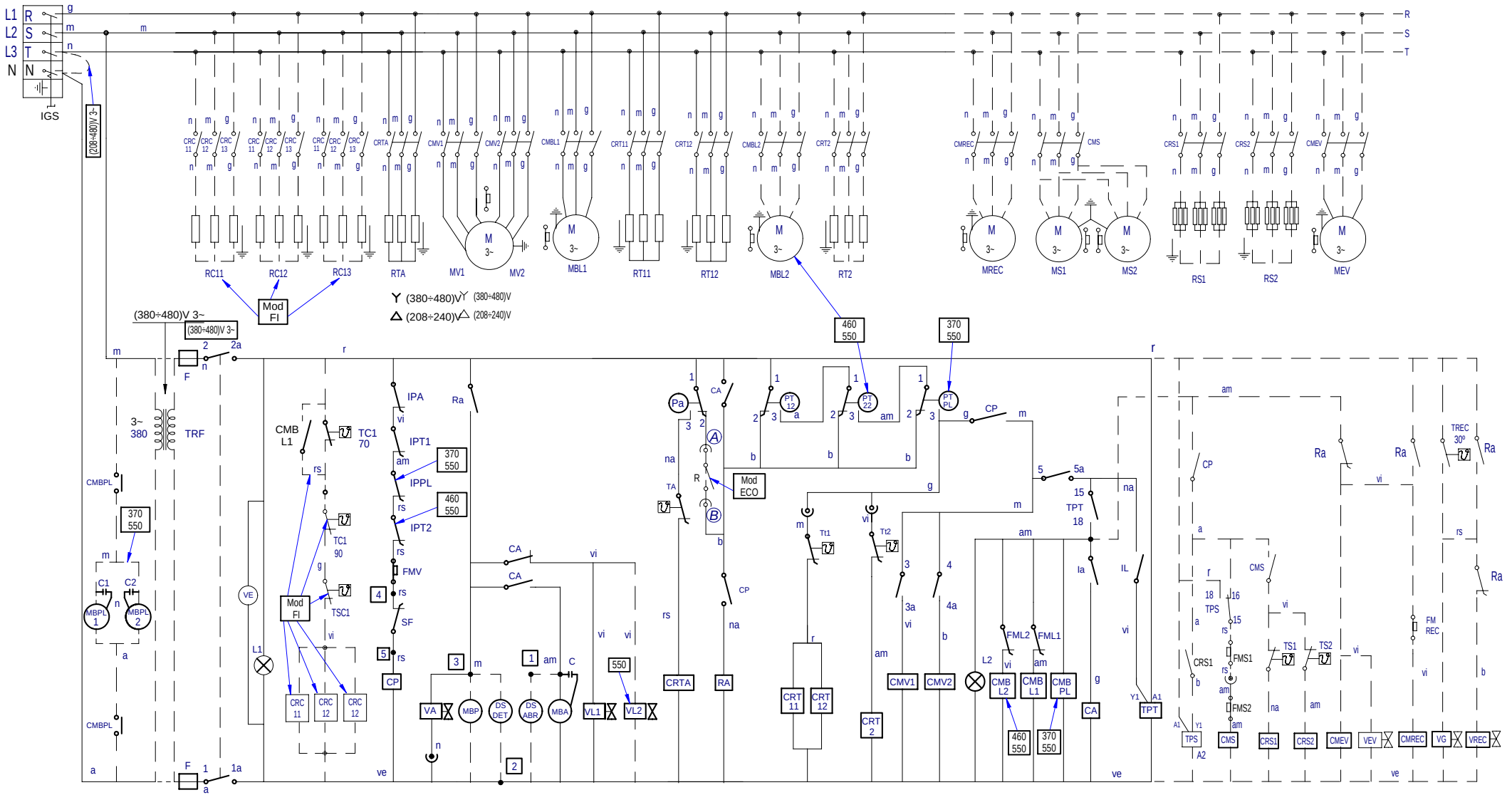

IG	1 1a	2 2a	3 3a	4 4a	5 5a	
0						
▽	X	X				
V_1	X	X	X		X	X
V_2	X	X		X	X	X

COLOR		ESPAÑOL	FRANÇAIS	ENGLISH	DEUTSCH	ITALIANO
		COLOR	*COULEUR*	*COLOUR*	*FARBEN*	*COLORE*
a	=	Azul	Bleu	Blue	Blau	Blu
am	=	Amarillo	Jaune	Yellow	Gelb	Giallo
am/ve	=	Amarillo/verde	Jaune / vert	Yellow / green	Gelb/grün	Giallo/verde
b	=	Blanco	Blanc	White	Weiß	Bianco
g	=	Gris	Gris	Grey	Grau	Grigio
m	=	Marrón	Marron	Brown	Braun	Marrone

COLOR		ESPAÑOL	FRANÇAIS	ENGLISH	DEUTSCH	ITALIANO
		COLOR	*COULEUR*	*COLOUR*	*FARBEN*	*COLORE*
n	=	Negro	Noir	Black	Schwarz	Nero
na	=	Naranja	Orange	Orange	Orange	Arancio
r	=	Rojo	Rouge	Red	Rot	Rosso
rs	=	Rosa	Rose	Pink	Rosa	Roseo
ve	=	Verde	Vert	Green	Grün	Verde
vi	=	Violeta	Violet	Purple	Violett	Viola

Z-373043000

ECO-550

400V 3N~

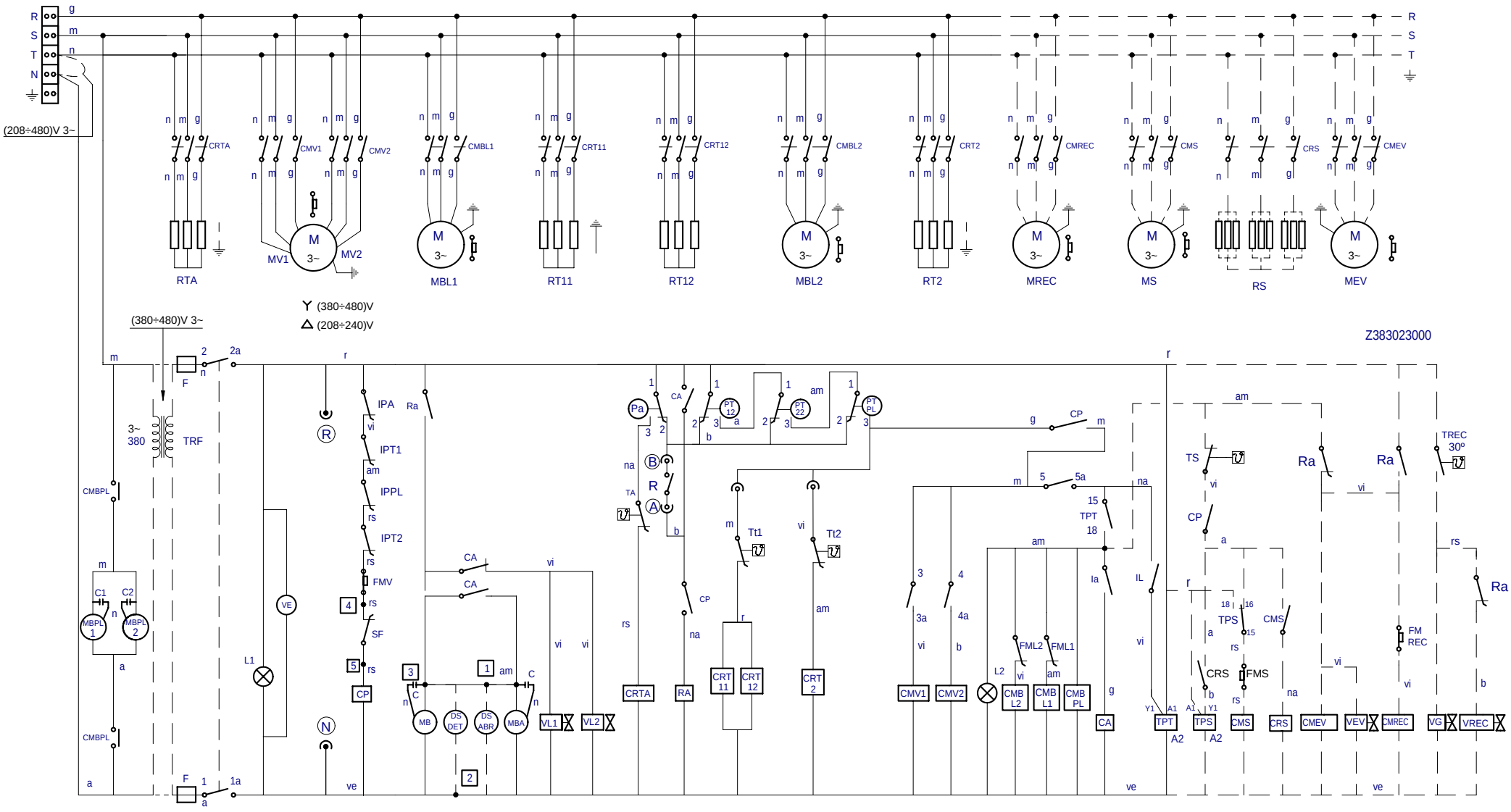

IG	1 1a	2 2a	3 3a	4 4a	5 5a	
0						
▽	X	X				
V_1	X	X	X		X	X
V_2	X	X		X	X	X

0, V_2, ▽, V_1

COLOR		ESPAÑOL	FRANÇAIS	ENGLISH	DEUTSCH	ITALIANO
		COLOR	*COULEUR*	*COLOUR*	*FARBEN*	*COLORE*
a	=	Azul	Bleu	Blue	Blau	Blu
am	=	Amarillo	Jaune	Yellow	Gelb	Giallo
am/ve	=	Amarillo/verde	Jaune / vert	Yellow / green	Gelb/grün	Giallo/verde
b	=	Blanco	Blanc	White	Weiß	Bianco
g	=	Gris	Gris	Grey	Grau	Grigio
m	=	Marrón	Marron	Brown	Braun	Marrone

COLOR		ESPAÑOL	FRANÇAIS	ENGLISH	DEUTSCH	ITALIANO
		COLOR	*COULEUR*	*COLOUR*	*FARBEN*	*COLORE*
n	=	Negro	Noir	Black	Schwarz	Nero
na	=	Naranja	Orange	Orange	Orange	Arancio
r	=	Rojo	Rouge	Red	Rot	Rosso
rs	=	Rosa	Rose	Pink	Rosa	Roseo
ve	=	Verde	Vert	Green	Grün	Verde
vi	=	Violeta	Violet	Purple	Violett	Viola

CONDENS.

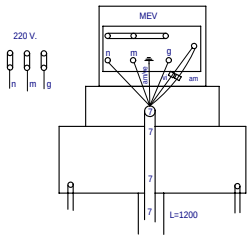

FI-460eT.S. / FI-550eT.S. / FI (TODOS) 380 V. / 220 V. — PG 42
- Prensaestopas Z-312941
- Junta goma Z-312942
- Tuerca Z-312943

FI-280eT.S. / FI-370eT.S. / ECO (TODOS) 380 V. — PG 36
- Prensaestopas R-143010
- Junta goma R-143026
- Tuerca R-143025

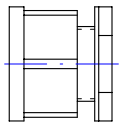

Modular HE-15487 - 3

C.E

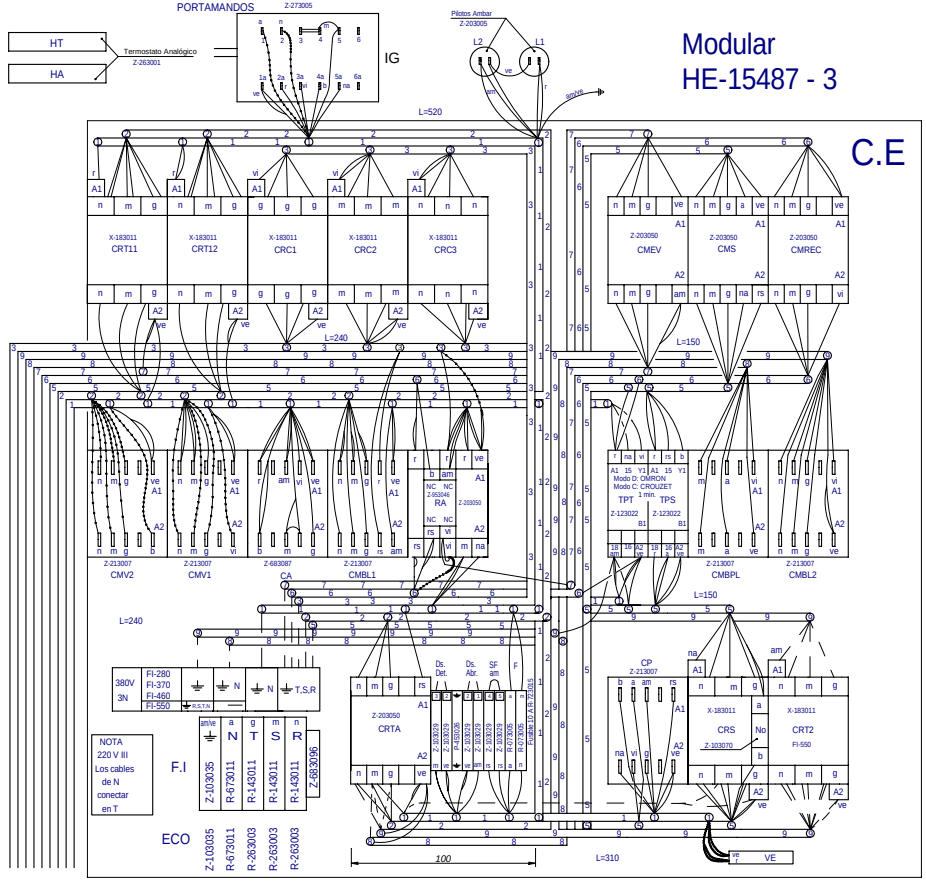

NOTA: ECO RECUPERADOR
No conectar el cable rosa en RA (NA)

REC.

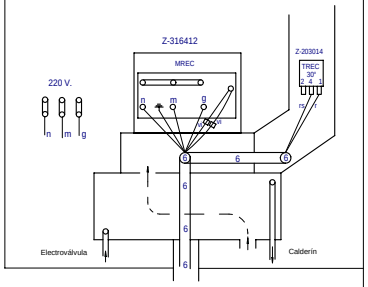

SEC.

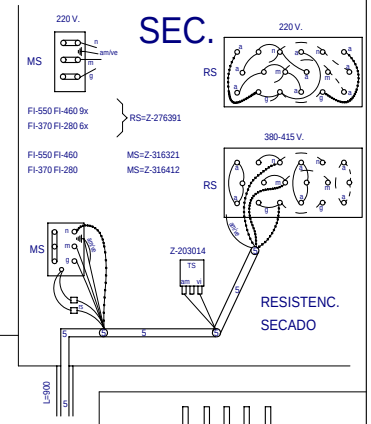

Nº	REFERENCIA	280	370	460	550	
1	Z-313071	X	X	X	X	I.Base Control
2	Z-313062	X	X	X	X	I.Base Fuerza
3	Z-313063	X	X	X	X	Calderín Eléctrico
5	Z-316381	X	X	X	X	Secado
6	Z-316452	X	X	X	X	Recuperador
7	Z-316702	X	X	X	X	Condensandor.Extrac.
8	Z-333040		X			Prelavado FI-370
9	Z-353041			X		Lavado 2 FI-460
8+9	Z-373042				X	Lavado 2 + Prelavado FI-550

ESQUEMAS ELECTRICOS		LEYENDA
ECO 280	Z-323020	Z-313070
ECO 370	Z-343021	Z-313070
ECO 460	Z-363022	Z-313070
ECO 550	Z-383023	Z-313070
FI-280	Z-313074	Z-313070
FI-370	Z-333041	Z-313070
FI-460	Z-353042	Z-313070
FI-550	Z-373043	Z-313070

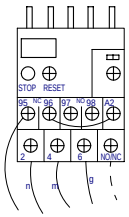

RELES TERMICOS	380-415 V	230 V
FMS FI-460-550	Z-316334 Reg. 2.6	Z-316335 Reg. 4.6
FMS FI-280-370	Z-123014 Reg. 1.4	Z-123015 Reg. 2.3
FMREC	Z-123014 Reg. 1.4	Z-123015 Reg. 2.3
FMREV	Z-123014 Reg. 1.4	Z-123015 Reg. 2.3

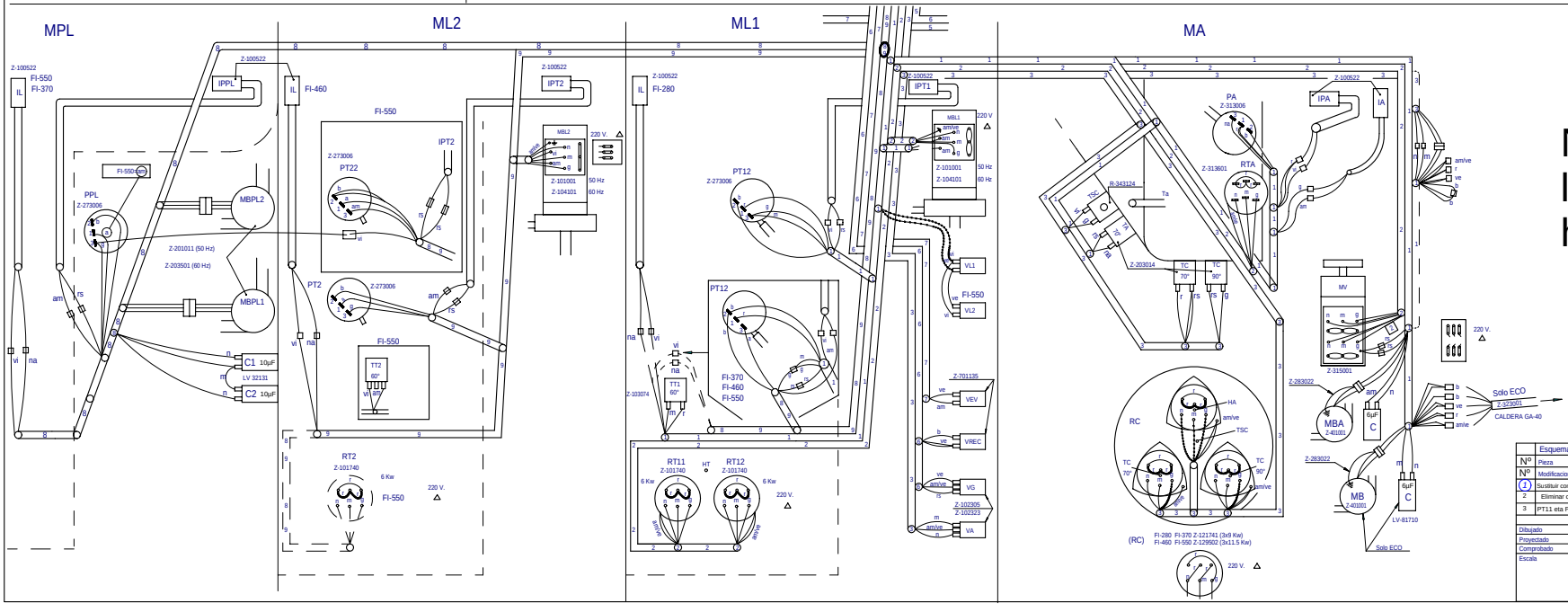

No Imprimir para la cadena, imprimir hoja 2 y 3 - 4

	Esquema montaje arrastre modular Izdo.		Z-313072	
Nº	Pieza	Material	Nº Clasificacion	Acabado
Nº	Modificacion	Propuesta de	Fecha	Tolerancias generales
1	Sustituir contac. R-663031 por Z-203050 y Z-316328 por Z-953046	J.M.P.	03-12-02	<3± 50~100±
2	Eliminar conexion en 1G 6 y conectar en CMBL1 (Cable r y rs)	M.Mallo	25-04-2005	3~25± >100±
3	PT11 eta PT21 kendutak	e.carrascal	2008-12-05	25~50± <±

	Firma	Fecha	
Dibujado	S. N.	6-2-2002	FAGOR
Proyectado			Fagor Industrial,Koop.Elk, Mugatxa
Comprobado			
Escala			

Mecanizado superficial

LAVAVAJILLAS

Plano numero HE-15487 - 3

Sustituye al Nº HE-15483

Sustituido por

Plano hau ez dakike erabili ez bertizta gan baimenitz gabe

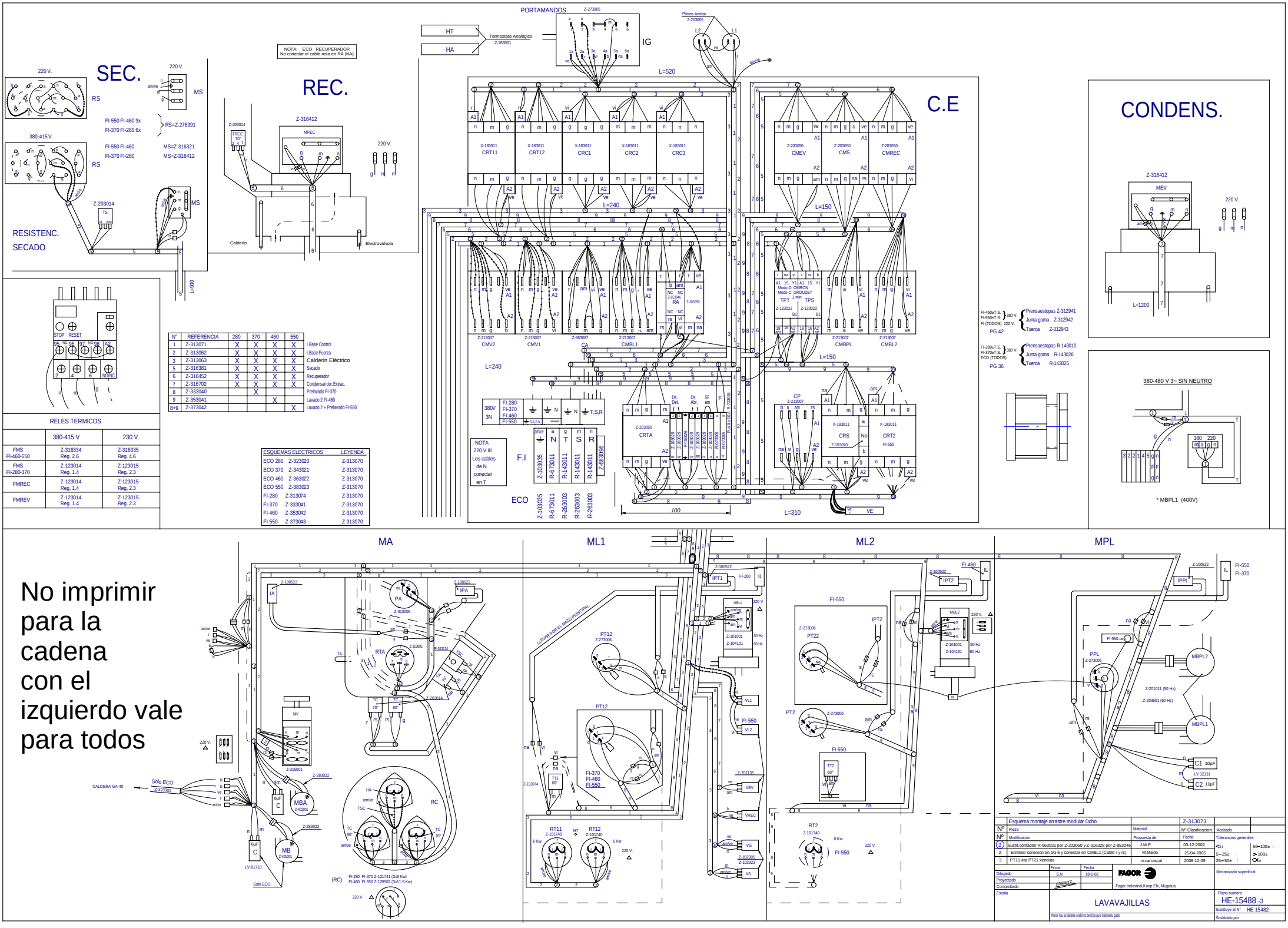
SEC.
REC.
C.E
CONDENS.
RESISTENC.
SECADO
RS
MS
220 V.
380-415 V.
FI-550 FI-460 9x
FI-370 FI-280 6x
RS=Z-276391
FI-550 FI-460
FI-370 FI-280
MS=Z-316321
MS=Z-316412
Z-203014
TS
L=900
NOTA: ECO RECUPERADOR
No conectar el cable rosa en RA (NA)
Z-316412
MREC
TREC 30°
Calderín
Electroválvula
PORTAMANDOS
Z-273005
HT
HA
Termostato Analógico
Z-263001
IG
Pilotos Ambar
Z-203005
L=520
L=240
L=150
L=310
100
CRT11
CRT12
CRC1
CRC2
CRC3
CMEV
CMS
CMREC
CMV2
CMV1
CA
CMBL1
CMBPL
CMBL2
TPT
TPS
RA
CRTA
CRS
CRT2
CP
F.I
ECO
380V 3N
FI-280
FI-370
FI-460
FI-550
T,S,R
Z-103035
R-673011
R-143011
R-263003
Z-683096
NOTA
220 V III
Los cables
de N
conectar
en T
STOP
RESET
RELES TERMICOS
380-415 V
230 V
FMS FI-460-550
Z-316334 Reg. 2.6
Z-316335 Reg. 4.6
FMS FI-280-370
Z-123014 Reg. 1.4
Z-123015 Reg. 2.3
FMREC
Z-123014 Reg. 1.4
Z-123015 Reg. 2.3
FMREV
Z-123014 Reg. 1.4
Z-123015 Reg. 2.3
Nº REFERENCIA 280 370 460 550
1 Z-313071 X X X X I.Base Control
2 Z-313062 X X X X I.Base Fuerza
3 Z-313063 X X X X Calderín Eléctrico
5 Z-316381 X X X X Secado
6 Z-316452 X X X X Recuperador
7 Z-316702 X X X X Condensandor,Extrac.
8 Z-333040 X Prelavado FI-370
9 Z-353041 X Lavado 2 FI-460
8+9 Z-373042 X Lavado 2 + Prelavado FI-550
ESQUEMAS ELECTRICOS LEYENDA
ECO 280 Z-323020 Z-313070
ECO 370 Z-343021 Z-313070
ECO 460 Z-363022 Z-313070
ECO 550 Z-383023 Z-313070
FI-280 Z-313074 Z-313070
FI-370 Z-333041 Z-313070
FI-460 Z-353042 Z-313070
FI-550 Z-373043 Z-313070
FI-460±T.S. FI-550±T.S. FI (TODOS) 220 V. 380 V.
Prensaestopas Z-312941
Junta goma Z-312942
Tuerca Z-312943
PG 42
FI-280±T.S. FI-370±T.S. ECO (TODOS) 380 V.
Prensaestopas R-143010
Junta goma R-143026
Tuerca R-143025
PG 36
Z-316412
MEV
L=1200
380-480 V 3~ SIN NEUTRO
* MBPL1 (400V)
No imprimir para la cadena con el izquierdo vale para todos
MA
ML1
ML2
MPL
IA
IPA
PA
RTA
MV
MBA
MB
RC
Solo ECO
CALDERA GA-40
LV-81710
(RC) FI-280 FI-370 Z-121741 (3x8 Kw)
FI-460 FI-550 Z-129502 (3x11.5 Kw)
IPT1
IPT2
PT12
PT22
PT2
RT1
RT2
VL1
VL2
VEV
VREC
VG
VA
MBL1
MBL2
IPPL
PPL
MBPL1
MBPL2
C1 10µF
C2 10µF
LV 32131
Esquema montaje arrastre modular Dcho.
Z-313073
Pieza
Material
Nº Clasificacion
Acabado
Modificacion
Propuesta de
Fecha
Tolerancias generales
1 Sustit.contactor R-663031 por Z-203050 y Z-316328 por Z-953046 J.M.P. 03-12-2002
2 Eliminar conexion en 1G 6 y conectar en CMBL1 (Cable r ys) M.Maillo 25-04-2005
3 PT11 eta PT21 kenduta e.carrascal 2008-12-05
Dibujado S.N 18-1-02
Proyectado
Comprobado
Escala
Firma
Fecha
Fagor Industrial,Koop.Elk, Mugatxa
Mecanizado superficial
LAVAVAJILLAS
Plano numero HE-15488 -3
Sustituye al Nº HE-15482
Sustituido por

ESPANOL

Ⓐ Ⓑ = Puntos de conexion con R
Ⓒ = Puntos de conex.160/200 sin secado ni condensador
C,C1,C2 = Condensador
CA = Rele auxiliar aclarado
CMBL 1/2/3 = Contactor bomba lavado 1/2/3
CMBPL = Contactor bomba prelavado
CMEV = Contactor motor extractor
CMS = Contactor motor secado
CMV 1/2 = Contactor avance 1/2
CMREC = Contactor motor recuperador
CRC 11/12/13/21/22 = Contactor calentamiento calderin
CRS = Contactor resistencia secado
CRTA = Contactor calentamiento aclarado
CRT2 = Contactor calentamiento tanque 2
CRT11/12 = Contactor calentamiento tanque 1
CP = Rele puerta
DS.ABR = Dosificador abrillantador
DS.DET.= Dosificador detergente
F = Fusible
FMEV = Rele termico motor extractor
FML1/2/3 = S. Termico bomba lavado 1/2/3
FMS = Rele termico motor secado
FMREC = Rele termico motor recuperador
FMV = S. Termica motor avance
Ia = Micro aclarado
IG = Interruptor general
IL = Micro lavado
Im1/2/3 = Pulsador de marcha
IPA = Micro puerta aclarado
IP1/2/3 = Pulsador de parada
IPPL = Micro puerta prelavado
IPT1/2/3 = Micro puerta tanque 1/2/3
L1 = Piloto de encendido
L2 = Piloto marcha
MB = Bomba de llenado y aclarado
MBA = Bomba aclarado
MBL1/2/3 = Bomba lavado 1/2/3
MBP = Bomba de presion
MBPL = Bomba prelavado
MEV = Motor extractor vahos
MREC = Motor recuperador
MS = Motor secado
MV = Motor avance
Pa = Presostato aclarado
PE1/2 = Parada de emergencia
PPL = Presostato prelavado
PT11 = Presostato lavado 1 calentamiento
PT12 = Presostato lavado 1 llenado
PT21 = Presostato lavado 2 calentamiento
PT2/PT22 = Presostato lavado 2 llenado
PT3 = Presostato lavado 3 llenado
R = Rele de Generador A.C.
Ⓡ Ⓝ = Toma de alimentacion Generador A.C.
Ra = Rele auxiliar aclarado y llenado
RC11/12/13/21/22 = Resistencia calderin
RS = Resistencia secado
RTA = Resistencia calentamiento aclarado
RT2 = Resistencia tanque 2
RT11/12 = Resistencia tanque 1
SF = Micro fin recorrido
TA = Termostato aclarado
TC,1/2 = Termostato calderin
TPA = Temporizador Aclarado
TPT = Temporizador inicio
TPS = Temporizador secado
TREC = Termostato recuperador
TRF = Transformador
TS = Termostato secado
TSC,1/2 = Limitador calderin
Tt1/2 = Termostato tanque 1/2
VA = Electrovalvula llenado y aclarado
VE = Ventilador cuadro electrico
VEV = Electrovalvula condensacion vahos
VL1/2 = Electrovalvula llenado tanque
VG = Electrovalvula general
VREC = Electrovalvula salida

COLOR		COLORES
a	=	Azul
am	=	Amarillo
am/ve	=	Amarillo/verde
b	=	Blanco
g	=	Gris
m	=	Marrón
n	=	Negro
na	=	Naranja
r	=	Rojo
rs	=	Rosa
ve	=	Verde
vi	=	Violeta

FRANÇAIS

Points de conexion R
Points de conexion 160/200 sans sechege ni condensateur
Condensateur
Relais auxilier rinçage
Contacteur pompe lavage 1/2/3
Contacteur pompe prelavage
Contacteur moteur extracteur
Contacteur moteur sechage
Contacteur avance 1/2
Contacteur moteur recuperateur
Contacteur chauf. surchauffeur
Contacteur resistances sechage
Contacteur chaufage rinçage
Contacteur chaufage cuve 2
Contacteur chaufage cuve 1
Relais porte
Dosseur de tensoactif
Dosseur de detergent
Fusible
Relais termique moteur extracteur
S. Termique pompe lavage 1/2/3
Relais termique moteur sechage
Relais termique moteur recuperateur
S. Termica moteur avance
Micro rinçage
Interrupteur general
Micro lavage
Bouton marche
Micro porte rinçage
Bouton arrêt
Micro porte prelavage
Micro porte cuve 1/2/3
Voyant funcionement
Voyant demarrage
Pompe remplissage rinçage
Pompe rinçage
Pompe lavage 1/2/3
Pompe de pression
Pompe prelavage
Moteur extracteur vapeur
Moteur recuperateur
Moteur sechage
Moteur avance
Pressostat rinçage
Arrêt d´urgence
Pressostat prelavage
Pressostat lavage 1 chauffage
Pressostat lavage 1 remplissage
Pressostat lavage 2 chauffage
Pressostat lavage 2 remplissage
Pressostat lavage 3 remplissage
Relais du Generateur
Alimentation generateur
Relais auxilier rinçage remplissage
Resistance surchauffeur
Resistance sechage
Resistance chauffage rinçage
Resistance cuve 2
Resistance cuve 1
Micro fin de coourse
Thermostat de rinçage
Thermostat surchauffeur
Temporisateur rinçage
Temporisateur demarrage
Temporisateur sechage
Thermostate recuperateur
Transformateur
Thermostat sechage
Thermostat limiteur surchauffeur
Thermostat cuve 1/2
Electrovanne remplissage rinçage
Ventilateur tableau electrique
Electrovanne condenseur vapeur
Electrovanne remplissage cuve
Electrovanne general
Electrovanne demarrage

COULEURS

Bleu
Jaune
Jaune / vert
Blanc
Gris
Marron
Noir
Orange
Rouge
Rose
Vert
Violet

ENGLISH

Conecction point with R
Connection points 160/200 without drying nor condenser
Condenser
Rinse auxiliary relay
Wash pump contactor 1/2/3
Pre-Wash pump contactor
Exhaust motor contactor
Drying motor contactor
Advance contactor 1/2
Motor recover contactor
Boiler heating contactor
Drying heating element contactor
Rinse heating contactor
Tank heating contactor 2
Tank heating contactor 1
Door relay
Rinse doser
Detergent doser
Fuse
Thermic switch exhaust motor relay
Thermic switch pump 1/2/3
Drying motor thermic relay
Thermic switch recover motor
Thermic switch rack pulling motor
Rinse microswitch
Main switch
Wash microswitch
On pushbutton
Rinse door microswitch
Off pushbutton
Pre-wash door microswitch
Tank door microswitch 1/2/3
Operation light
Start light
Fill and rinse pump
Rinse pump
Wash pump 1/2/3
Pressure pump
Pre-wash pump
Exhaust steam motor
Recover motor
Drying motor
Motor advance
Rinse level switch
Emergency stop
Pre-wash level switch
Wash level 1 and heating switch
Wash level 1 and fill switch
Wash level 2 and heating switch
Wash level 2 and fill switch
Wash 3 fill pressostat
Generator rele
Water heater feeding
Rinse and fill auxiliary relay
Boiler heating element
Drying heating element
Rinse heating heater
Tank heater 2
Tank heater 1
Safety end switch
Rinse thermostat
Boiler thermostat
Rinsing timer
Start timer
Drying timer
Recover thermostat
Trasformer
Drying thermostat
Boiler Hi-limit thermostat
Tank thermostat 1/2
Fill and rinse valve
Switchboard fan
Exhaust condenser solenoide valve
Tank fill valve
Main valve
Outlet solenoide valve

COLOUR

Blue
Yellow
Yellow / green
White
Grey
Brown
Black
Orange
Red
Pink
Green
Purple

DEUTSCH

Anschlusspunkte mit R
Anschlusspunkte 160/200 weder ohne Trocknung noch Kondensator
Kondensator
Hilfsrelais Spülen
Kontaktschütz Waschpumpe 1/2/3
Kontaktschütz Vorwaschpumpe
Kontaktschütz Abzugsmotor
Kontaktschütz Trocknungsmotor
Kontaktschütz Vorlauf 1/2
Kontaktschütz Rekuperatormotor
Kontaktschütz Boilerheizung
Kontaktschütz Trocknungsheizwiderstand
Kontaktschütz Spülheizung
Kontaktschütz Heizung Tank 2
Kontaktschütz Heizung Tank 1
Türrelais
Dosierer Glanzmittel
Dosierer Spülmittel
Sicherung
Thermorelais Abzugsmotor
Thermoschalter Waschpumpe 1/2/3
Thermorelais Trocknungsmotor
Thermorelais Rekuperatormotor
Thermoschalter Vorlaufmotor
Mikroschalter Spülen
Hauptschalter
Mikroschalter Waschen
Betriebstaster
Mikroschalter Tür Spülen
Aus-Taster
Mikroschalter Tür Vorwaschen
Mikroschalter Tür Tank 1/2/3
Betriebsanzeigelampe
Startanzeigelampe
Füll-und Spülpumpe
Spülpumpe
Waschpumpe 1/2/3
Druckpumpe
Vorwaschpumpe
Motor Dampfabzug
Rekuperatormotor
Trocknungsmotor
Vorlaufmotor
Druckregler Spülen
Not-Aus
Druckregler Vorwaschen
Druckregler Waschstufe 1 Heizen
Druckregler Waschstufe 1 Füllen
Druckregler Waschstufe 2 Heizen
Druckregler Waschstufe 2 Füllen
Druckwächter Spülgang 3 Füllvorgang
Relais Generator
Stromversorgungsanschluss Generator
Hilfsrelais Spülen und Füllen
Boilerheizwiderstand
Heizwiderstand Trocknen
Heizwiderstand Spülen
Heizwiderstand Tank 2
Heizwiderstand Tank 1
Mikroschalter Zyklusende
Thermostat zum Spülen
Thermostat kessel
Zeitschaltuhr Spülgang
Start-Timer
Trocknungs-Timer
Rekuperator-Timer
Transformator
Trocknungsthermostat
Grenzthermostat Boiler
Thermostat Tank 1/2
Elektroventil Füllen und Spülen
Schalttafelventilator
Elektroventil Dampfkondensation
Elektroventil Tankfüllung
Hauptelektroventil
Ausgangselectroventil

FARBEN

Blau
Gelb
Gelb/grün
Weiß
Grau
Braun
Schwarz
Orange
Rot
Rosa
Grün
Violett

ITALIANO

Punti di collegamento con R
Punti di collegamento 160/200 senza asciugatura né condensatore
Condensatore
Rele ausiliario risciacquo
Contattore pompa lavaggio 1/2/3
Contattore pompa prelavaggio
Contattore motore estrattore
Contattore motore asciugatura
Contattore avanzamento 1/2
Contattore motore recuperatore
Contattore riscaldamento boiler
Contattore resistenza asciugatura
Contattore riscaldamento risciacquo
Contattore riscaldamento serbatoio 2
Contattore riscaldamento serbatoio 1
Rele porta
Dosatore brillantante
Dosatore detersivo
Fusibile
Rele termico motore estrattore
Rele termico pompa lavaggio 1/2/3
Rele termico motore asciugatura
Contattore motore recuperatore
Rele termico motore avanzamento
Microinterruttore risciacquo
Interruttore generale
Microinterruttore lavaggio
Bottone di avvio
Microinterruttore porta risciacquo
Bottone di arresto
Microinterruttore porta prelavaggio
Microinterruttore porta serbatoio 1/2/3
Spia accensione
Spia avvio
Pompa di riempimento e risciacquo
Pompa risciacquo
Pompa lavaggio 1/2/3
Pompa a pressione
Pompa prelavaggio
Motore estrazione vapore
Motore recuperatore
Motore asciugatura
Motore avanzamento
Pressostato risciacquo
Arresto di emergenza
Pressostato prelavaggio
Pressostato lavaggio 1 riscaldamento
Pressostato lavaggio 1 riempimento
Pressostato lavaggio 2 riscaldamento
Pressostato lavaggio 2 riempimento
Pressostato lavaggio 3 riempimento
Rele Generator
Alimentazione generatore
Rele ausiliario risciacquo e riempimento
Resistenza boiler
Resistenza asciugatura
Resistenza riscaldamento risciacquo
Resistenza serbatoio 2
Resistenza serbatoio 1
Microinterruttore finecorsa
Termostato risciacquo
Termostato boiler
Timer risciacquo
Timer avvio
Timer asciugatura
Termostato recuperatore
Trasformatore
Termostato asciugatura
Termostato limitatore boiler
Termostato serbatoio 1/2
Elettrovalvola riempimento e risciacquo
Ventilatore quadro elettrico
Elettrovalvola condensazione vapore
Elettrovalvola riempimento serbatoio
Elettrovalvola generale
Elettrovalvola uscita

COLORE

Blu
Giallo
Giallo/verde
Bianco
Grigio
Marrone
Nero
Arancio
Rosso
Roseo
Verde
Viola

Z313070000