# Sarten basculante
# Sauteuse basculante
# Tilting bratt pan
# Kippbratpfannen
# Brasiera

## SERIE 900

**Modelos:**

SBG 9-10
SBG 9-10S
SBG 9-10I
SBG 9-10 I S
SBG 9-10 M
SBG 9-10 M S
SBG 9-10 I M
SBG 9-10 I M S
SBG 9-15 I M
SBG 9-15 I M S

SBE 9-10
SBE 9-10S
SBE 9-10I
SBE 9-10 I S
SBE 9-10 M
SBE 9-10 M S
SBE 9-10 I M
SBE 9-10 I M S
SBE 9-15 I M
SBE 9-15 I M S

*Junio 2002 June*

FAGOR

Fagor Industrial

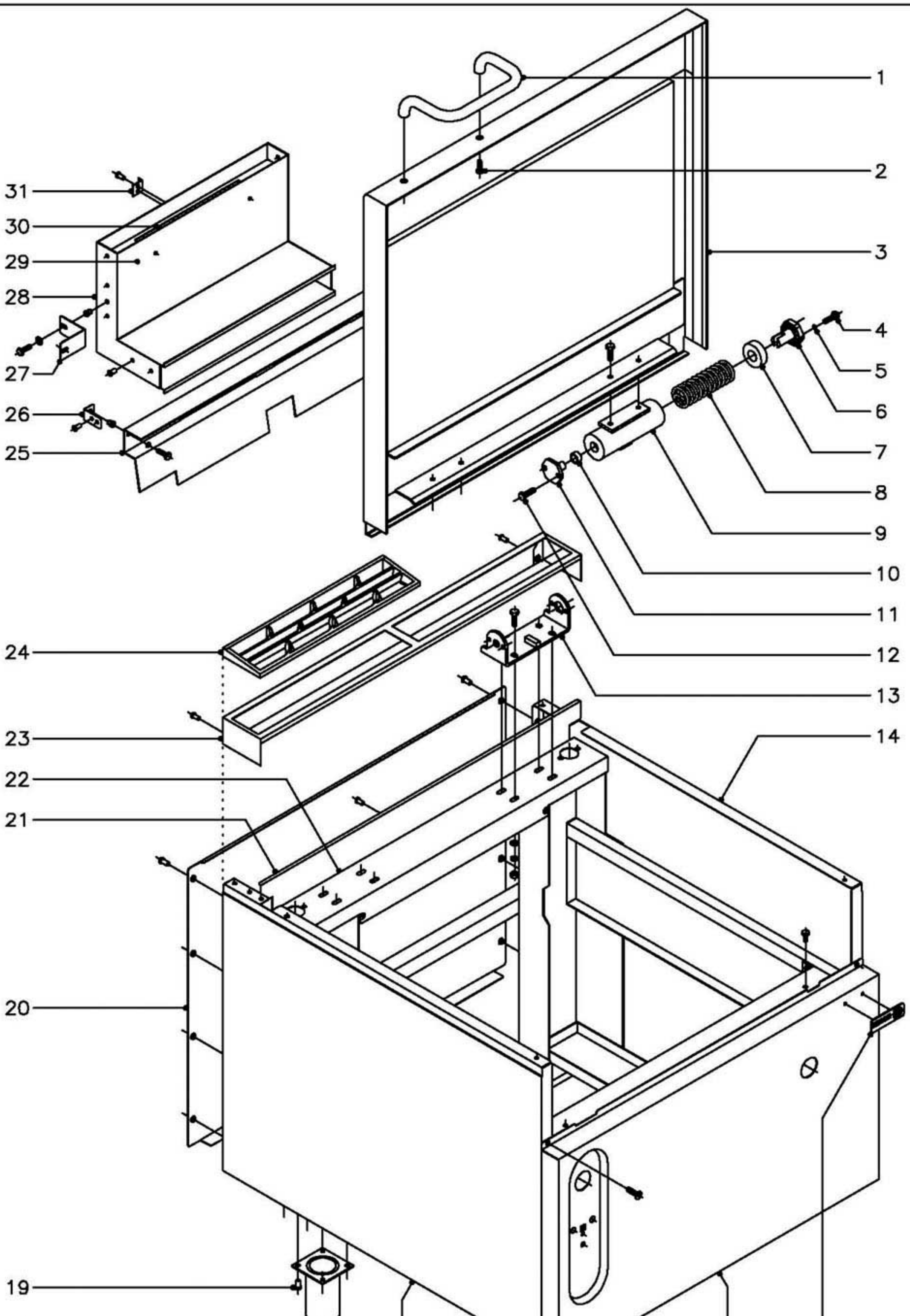


| N plano | Firma | Fecha | Aparato | Lamina | |
|---|---|---|---|---|---|
| C–1197 | | 6–2002 | MUEBLE<br>SARTEN BASCULANTE 900 | 1 | Fagor Industrial S.Coop. FAGOR<br>Oñate |

| MOD. | SARTENES BASCULANTES GAMA 900 | ZONA | MUEBLE | PLANO | C-1197 |
|---|---|---|---|---|---|

| ITEM | CODIGO | DENOMINACION | TEXTO | SBG9-10 SBG9-10 M | SBG9-10 S SBG9-10 M S | SBE9-10 SBE9-10 M | SBE9-10 S SBE9-10 M S | SBG9-15 M | SBG9-15 M S | SBE9-15 M | SBE9-15 M S | | NOTAS |
|---|---|---|---|---|---|---|---|---|---|---|---|---|---|
| 1 | S036123 | Asa de tapa | | 1 | 1 | 1 | 1 | 1 | 1 | 1 | 1 | | |
| 2 | X152809 | Tornillo sujecion asa tapa M-8x15 | | 2 | 2 | 2 | 2 | 2 | 2 | 2 | 2 | | |
| 3 | X152843 | Tapa completa 1 M. | | 1 | 1 | 1 | 1 | - | - | - | - | | |
| 3 | X282820 | Tapa completa 1,5 M. | | - | - | - | - | 1 | 1 | 1 | 1 | | |
| 4 | Q012042 | Tornillo exagonal M-6x15 | | 4 | 4 | 4 | 4 | 4 | 4 | 4 | 4 | | |
| 5 | Q262040 | Arandela muelle A-6 | | 4 | 4 | 4 | 4 | 4 | 4 | 4 | 4 | | |
| 6 | S116120 | Tensor resorte | | 2 | 2 | 2 | 2 | 2 | 2 | 2 | 2 | | |
| 7 | S116118 | Casquillo | | 2 | 2 | 2 | 2 | 2 | 2 | 2 | 2 | | |
| 8 | S116121 | Resorte tapa | | 2 | 2 | 2 | 2 | 2 | 2 | 2 | 2 | | |
| 9 | X156101 | Bisagra | | 2 | 2 | 2 | 2 | 2 | 2 | 2 | 2 | | |
| | Q012051 | Tornillo exagonal M-8x10 | | 4 | 4 | 4 | 4 | 4 | 4 | 4 | 4 | | |
| 10 | S116126 | Cojinete cilindrico | | 2 | 2 | 2 | 2 | 2 | 2 | 2 | 2 | | |
| 11 | S116119 | Giro de asa | | 2 | 2 | 2 | 2 | 2 | 2 | 2 | 2 | | |
| 12 | Q012041 | Tornillo exagonal M-6x10 | | 4 | 4 | 4 | 4 | 4 | 4 | 4 | 4 | | |
| 13 | X286102 | Soporte de bisagra | | 2 | 2 | 2 | 2 | 2 | 2 | 2 | 2 | | |
| | Q012053 | Tornillo exagonal M-8x20 | | 8 | 8 | 8 | 8 | 8 | 8 | 8 | 8 | | |
| | Q232050 | Arandela plana A-8 | | 8 | 8 | 8 | 8 | 8 | 8 | 8 | 8 | | |
| | Q262050 | Arandela muelle A-8 | | 8 | 8 | 8 | 8 | 8 | 8 | 8 | 8 | | |
| | Q162050 | Tuerca exagonal M-8 | | 8 | 8 | 8 | 8 | 8 | 8 | 8 | 8 | | |
| 14 | X152836 | Panel lateral derecho | | 1 | - | 1 | - | 1 | - | 1 | - | | |
| 14 | X242820 | Panel lateral derecho suspendido | | - | 1 | - | 1 | - | 1 | - | 1 | | |
| | Q012042 | Tornillo exagonal M-6x15 | | 4 | 4 | 4 | 4 | 4 | 4 | 4 | 4 | | |
| | Q262040 | Arandela muelle A-6 | | 4 | 4 | 4 | 4 | 4 | 4 | 4 | 4 | | |
| | Q302022 | Arandela plana Ø16xØ6x1,2 | | 4 | 4 | 4 | 4 | 4 | 4 | 4 | 4 | | |
| 15 | U262806 | Escudo FAGOR | | 1 | 1 | 1 | 1 | 1 | 1 | 1 | 1 | | |
| | Q221023 | Clip sujecion escudo | | 2 | 2 | 2 | 2 | 2 | 2 | 2 | 2 | | |
| 16 | X152839 | Panel frontal SBG9-10 | | 1 | 1 | - | - | - | - | - | - | | |
| 16 | X342805 | Panel frontal SBG9-10 Motorizada | | 1 | 1 | - | - | - | - | - | - | | |
| 16 | X142802 | Panel frontal SBE9-10 | | - | - | 1 | 1 | - | - | - | - | | |

| MOD. | SARTENES BASCULANTES GAMA 900 | ZONA | MUEBLE | PLANO | C-1197 |
|---|---|---|---|---|---|

| ITEM | CODIGO | DENOMINACION | TEXTO | SBG9-10 / SBG9-10 M | SBG9-10 S / SBG9-10 M S | SBE9-10 / SBE9-10 M | SBE9-10 S / SBE9-10 M S | SBG9-15 M | SBG9-15 M S | SBE9-15 M | SBE9-15 M S | | NOTAS |
|---|---|---|---|---|---|---|---|---|---|---|---|---|---|
| 16 | X142802 | Panel frontal SBE9-10 Motorizada | | - | - | 1 | 1 | - | - | - | - | | |
| 16 | X282816 | Panel frontal SBG-15 | | - | - | - | - | 1 | 1 | - | - | | |
| 16 | X422801 | Panel frontal SBE-15 | | - | - | - | - | - | - | 1 | 1 | | |
| | Q012042 | Tornillo exagonal M-6x15 | | 2 | 2 | 2 | 2 | 2 | 2 | 2 | 2 | | |
| | Q262040 | Arandela muelle A-6 | | 2 | 2 | 2 | 2 | 2 | 2 | 2 | 2 | | |
| | Q152004 | Tornillo aplastado M-5x13 | | 2 | 2 | 2 | 2 | 2 | 2 | 2 | 2 | | |
| 17 | X152835 | Panel lateral izquierdo | | 1 | - | 1 | - | 1 | - | 1 | - | | |
| 17 | X242821 | Panel lateral izquierdo suspendido | | - | 1 | - | 1 | - | 1 | - | 1 | | |
| | Q012042 | Tornillo exagonal M-6x15 | | 4 | 4 | 4 | 4 | 4 | 4 | 4 | 4 | | |
| | Q262040 | Arandela muelle A-6 | | 4 | 4 | 4 | 4 | 4 | 4 | 4 | 4 | | |
| | Q302022 | Arandela plana Ø16xØ6x1,2 | | 4 | 4 | 4 | 4 | 4 | 4 | 4 | 4 | | |
| 18 | X260151 | Pata regulable | | 4 | - | 4 | - | 4 | - | 4 | - | | |
| 19 | Q411304 | Remache avibulb Ø4,8 | | 16 | - | 16 | - | 16 | - | 16 | - | | |
| 20 | U562853 | Panel posterior SB-10 | | 1 | - | 1 | - | - | - | - | - | | |
| 20 | S372816 | Panel posterior SB-10 suspendido | | - | 1 | - | 1 | - | - | - | - | | |
| 20 | U582852 | Panel posterior SB-15 | | - | - | - | - | 1 | - | 1 | - | | |
| 20 | X412802 | Panel posterior SB-15 suspendido | | - | - | - | - | - | 1 | - | 1 | | |
| | Q419005 | Remache tubular Ø4x8 | | 8 | 8 | 8 | 8 | 8 | 8 | 8 | 8 | | |
| 21 | X152638 | Liston posterior SB-10 | | 1 | 1 | 1 | 1 | - | - | - | - | | |
| 21 | X282613 | Liston posterior SB-15 | | - | - | - | - | 1 | 1 | 1 | 1 | | |
| | Q419005 | Remache tubular Ø4x8 | | 5 | 5 | 5 | 5 | 5 | 5 | 5 | 5 | | |
| 22 | X150100 | Armazon completo SB-10 | | 1 | - | 1 | - | - | - | - | - | | |
| 22 | X240100 | Armazon completo SB-10 S | | - | 1 | - | 1 | - | - | - | - | | |
| 22 | X420100 | Armazon completo SB-15 | | - | - | - | - | 1 | - | 1 | - | | |
| 22 | X440100 | Armazon completo SB-15 S | | - | - | - | - | - | 1 | - | 1 | | |
| 23 | R205428 | Soporte embellecedor 1 M. | | 1 | 1 | 1 | 1 | - | - | - | - | | |
| 23 | R205430 | Soporte embellecedor 1,5 M. | | - | - | - | - | 1 | 1 | 1 | 1 | | |
| | Q419005 | Remache tubular Ø4x8 | | 2 | 2 | 2 | 2 | 2 | 2 | 2 | 2 | | |
| 24 | R205425 | Embellecedor chimenea | | 2 | 2 | 2 | 2 | 3 | 3 | 3 | 3 | | |

| MOD. | SARTENES BASCULANTES GAMA 900 | ZONA | MUEBLE | PLANO | C-1197 |
|---|---|---|---|---|---|

| ITEM | CODIGO | DENOMINACION | TEXTO | SBG9-10 / SBG9-10 M | SBG9-10 S / SBG9-10 M S | SBE9-10 / SBE9-10 M | SBE9-10 S / SBE9-10 M S | SBG9-15 M | SBG9-15 M S | SBE9-15 M | SBE9-15 M S | | NOTAS |
|---|---|---|---|---|---|---|---|---|---|---|---|---|---|
| 25 | X152677 | Salida de humos SBG-10 | | 1 | 1 | - | - | - | - | - | - | | |
| 25 | X282630 | Salida de humos SBG-15 | | - | - | - | - | 1 | 1 | - | - | | |
| | Q012031 | Tornillo exagonal M-5x10 | | 2 | 2 | - | - | 2 | 2 | - | - | | |
| | Q232030 | Arandela muelle A-5 | | 2 | 2 | - | - | 2 | 2 | - | - | | |
| | Q221342 | Remache exagonal M-5 | | 2 | 2 | - | - | 2 | 2 | - | - | | |
| 26 | X152679 | Soporte salida de humos | | 2 | 2 | - | - | 2 | 2 | - | - | | |
| | Q419005 | Remache tubular Ø4x8 | | 4 | 4 | - | - | 4 | 4 | - | - | | |
| 27 | X152655 | Amarre chimenea | | 2 | 2 | - | - | 2 | 2 | - | - | | |
| | Q012031 | Tornillo exagonal M-5x10 | | 4 | 4 | - | - | 4 | 4 | - | - | | |
| | Q302022 | Arandela plana Ø16xØ6x1,2 | | 4 | 4 | - | - | 4 | 4 | - | - | | |
| | Q221342 | Remache exagonal M-5 | | 4 | 4 | - | - | 4 | 4 | - | - | | |
| 28 | X152674 | Posterior de chimenea SBG-10 | | 1 | 1 | - | - | - | - | - | - | | |
| 28 | X282627 | Posterior de chimenea SBG-15 | | - | - | - | - | 1 | 1 | - | - | | |
| 29 | X152673 | Anterior de chimenea SBG-10 | | 1 | 1 | - | - | - | - | - | - | | |
| 29 | X282626 | Anterior de chimenea SBG-15 | | - | - | - | - | 1 | 1 | - | - | | |
| 30 | X152654 | Freno de humos SBG-10 | | 1 | 1 | - | - | - | - | - | - | | |
| 30 | X282628 | Freno de humos SBG-15 | | - | - | - | - | 1 | 1 | - | - | | |
| 31 | R202607 | Escuadra | | 1 | 1 | - | - | 1 | 1 | - | - | | |
| | Q419005 | Remache tubular Ø4x8 | | 16 | 16 | - | - | 16 | 16 | - | - | | |
| | | | | | | | | | | | | | |
| | | | | | | | | | | | | | |
| | | | | | | | | | | | | | |
| | | | | | | | | | | | | | |
| | | | | | | | | | | | | | |
| | | | | | | | | | | | | | |
| | | | | | | | | | | | | | |
| | | | | | | | | | | | | | |
| | | | | | | | | | | | | | |
| | | | | | | | | | | | | | |

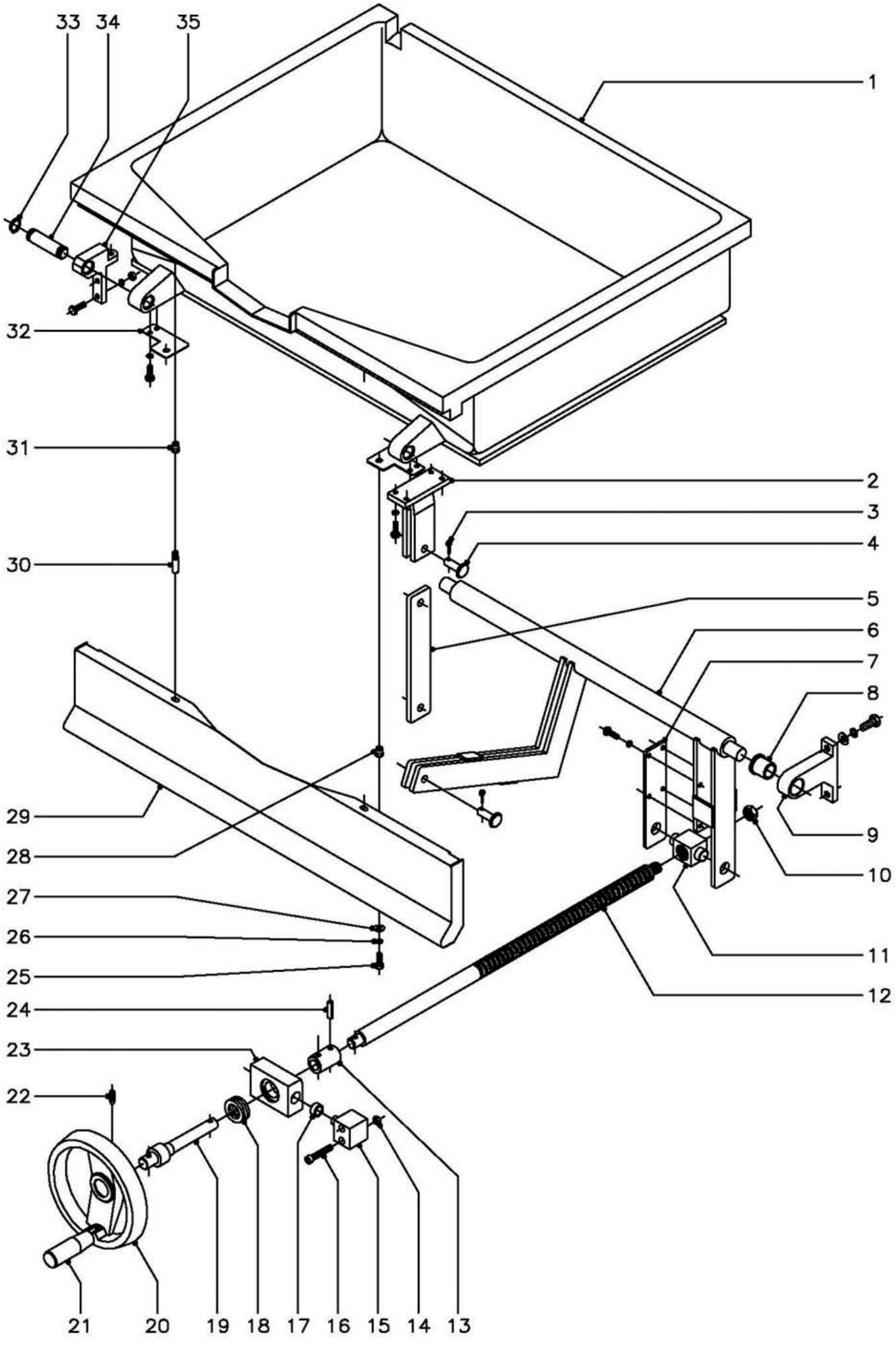


| N plano | Firma | Fecha | Aparato | | Lamina | |
|---|---|---|---|---|---|---|
| C–1198 | | 6–2002 | SARTEN BASCULANTE 900 (Elev.Manual) | CUBA | 2 | Fagor Industrial S.Coop. FAGOR Onate |

| MOD. | SARTENES BASCULANTES GAMA 900 | ZONA | CUBA (Elevacion Manual) | PLANO | C-1198 |
|---|---|---|---|---|---|

| ITEM | CODIGO | DENOMINACION | TEXTO | SBG9-10 | SBG9-10 I | SBE9-10 | SBE9-10 I | | | | | | NOTAS |
|---|---|---|---|---|---|---|---|---|---|---|---|---|---|
| 1 | X156155 | Cuba SBG9-10 | | 1 | - | - | - | | | | | | |
| 1 | X156150 | Cuba SBG9-10 I | | - | 1 | - | - | | | | | | |
| 1 | X146125 | Cuba SBE9-10 | | - | - | 1 | - | | | | | | |
| 1 | X146126 | Cuba SBE9-10 I | | - | - | - | 1 | | | | | | |
| 2 | X156157 | Horquilla de giro | | 1 | - | 1 | - | | | | | | |
| | Q262040 | Arandela muelle A-6 | | 4 | - | 4 | - | | | | | | |
| | Q012042 | Tornillo exagonal M-6x15 | | 4 | - | 4 | - | | | | | | |
| 2 | - | Horquilla de giro (soldado a cuba) | | - | 1 | - | 1 | | | | | | |
| 3 | Q352024 | Pasador de aletas Ø4x25 | | 2 | 2 | 2 | 2 | | | | | | |
| 4 | X156123 | Bulon Ø12 | | 2 | 2 | 2 | 2 | | | | | | |
| 5 | X156151 | Brazo | | 1 | 1 | 1 | 1 | | | | | | |
| 6 | X156148 | Brazo elevador | | 1 | 1 | 1 | 1 | | | | | | |
| 7 | X156149 | Brazo lateral | | 1 | 1 | 1 | 1 | | | | | | |
| | Q012042 | Tornillo exagonal M-6x15 | | 4 | 4 | 4 | 4 | | | | | | |
| | Q262040 | Arandela muelle A-6 | | 4 | 4 | 4 | 4 | | | | | | |
| 8 | X109550 | Cojinete | | 2 | 2 | 2 | 2 | | | | | | |
| 9 | X150108 | Soporte giro | | 2 | 2 | 2 | 2 | | | | | | |
| | Q232060 | Arandela plana A-10 | | 4 | 4 | 4 | 4 | | | | | | |
| | Q261060 | Arandela muelle A-10 | | 4 | 4 | 4 | 4 | | | | | | |
| | Q012063 | Tornillo exagonal M-10x20 | | 4 | 4 | 4 | 4 | | | | | | |
| 10 | Q222015 | Tuerca exagonal 3/8" | | 1 | 1 | 1 | 1 | | | | | | |
| 11 | X156154 | Tuerca de husillo | | 1 | 1 | 1 | 1 | | | | | | |
| 12 | X156152 | Husillo | | 1 | 1 | 1 | 1 | | | | | | |
| 13 | X156115 | Casquillo | | 1 | 1 | 1 | 1 | | | | | | |
| 14 | Q162040 | Tuerca exagonal M-6 | | 4 | 4 | 4 | 4 | | | | | | |
| 15 | X156113 | Pivote de giro | | 2 | 2 | 2 | 2 | | | | | | |
| 16 | Q052046 | Tornillo allem M-6x40 | | 4 | 4 | 4 | 4 | | | | | | |
| 17 | S116126 | Cojinete cilindrico | | 2 | 2 | 2 | 2 | | | | | | |
| 18 | X156125 | Rodamiento | | 1 | 1 | 1 | 1 | | | | | | |

| MOD. | SARTENES BASCULANTES GAMA 900 | ZONA | CUBA (Elevacion Manual) | PLANO | C-1198 |
|---|---|---|---|---|---|

| ITEM | CODIGO | DENOMINACION | TEXTO | SBG9-10 | SBG9-10 I | SBE9-10 | SBE9-10 I | | | | | | NOTAS |
|---|---|---|---|---|---|---|---|---|---|---|---|---|---|
| 19 | X156153 | Eje volante | | 1 | 1 | 1 | 1 | | | | | | |
| 20 | X156139 | Volante con mango inoxidable | | 1 | 1 | 1 | 1 | | | | | | |
| 21 | X156135 | Mango abatible inoxidable | | 1 | 1 | 1 | 1 | | | | | | |
| 22 | Q131552 | Varilla roscada M-8x15 | | 2 | 2 | 2 | 2 | | | | | | |
| 23 | X156114 | Soporte rodamiento | | 1 | 1 | 1 | 1 | | | | | | |
| 24 | Q371027 | Manguito Ø8x30 | | 2 | 2 | 2 | 2 | | | | | | |
| 25 | Q012042 | Tornillo exagonal M-6x15 | | 2 | 2 | 2 | 2 | | | | | | |
| 26 | Q262040 | Arandela muelle A-6 | | 2 | 2 | 2 | 2 | | | | | | |
| 27 | Q302022 | Arandela plana Ø16xØ6x1,2 | | 2 | 2 | 2 | 2 | | | | | | |
| 28 | Q221343 | Remache exagonal M-6 | | 2 | 2 | 2 | 2 | | | | | | |
| 29 | X152830 | Panel portamandos (Cuba fundid.) | | 1 | - | 1 | - | | | | | | |
| 29 | X152833 | Panel portamandos (Cuba inox.) | | - | 1 | - | 1 | | | | | | |
| 30 | Q151336 | Tornillo soporte guia portamandos | | 2 | 2 | 2 | 2 | | | | | | |
| 31 | Q221343 | Remache exagonal M-6 | | 2 | 2 | 2 | 2 | | | | | | |
| 32 | X156156 | Amarre panel portamandos | | 2 | 2 | 2 | 2 | | | | | | |
| | Q262040 | Arandela muelle A-6 | | 4 | - | 4 | - | | | | | | |
| | Q012042 | Tornillo exagonal M-6x15 | | 4 | - | 4 | - | | | | | | |
| 33 | Q301020 | Anillo seguridad Ø20x1,2 | | 4 | 4 | 4 | 4 | | | | | | |
| 34 | X109511 | Bulon | | 2 | 2 | 2 | 2 | | | | | | |
| 35 | X156145 | Soporte giro cuba | | 2 | 2 | 2 | 2 | | | | | | |
| | Q012043 | Tornillo exagonal M-6x20 | | 6 | 6 | 6 | 6 | | | | | | |
| | Q262040 | Arandela muelle A-6 | | 6 | 6 | 6 | 6 | | | | | | |
| | Q162040 | Tuerca exagonal M-6 | | 6 | 6 | 6 | 6 | | | | | | |
| | | | | | | | | | | | | | |
| | | | | | | | | | | | | | |
| | | | | | | | | | | | | | |
| | | | | | | | | | | | | | |
| | | | | | | | | | | | | | |
| | | | | | | | | | | | | | |

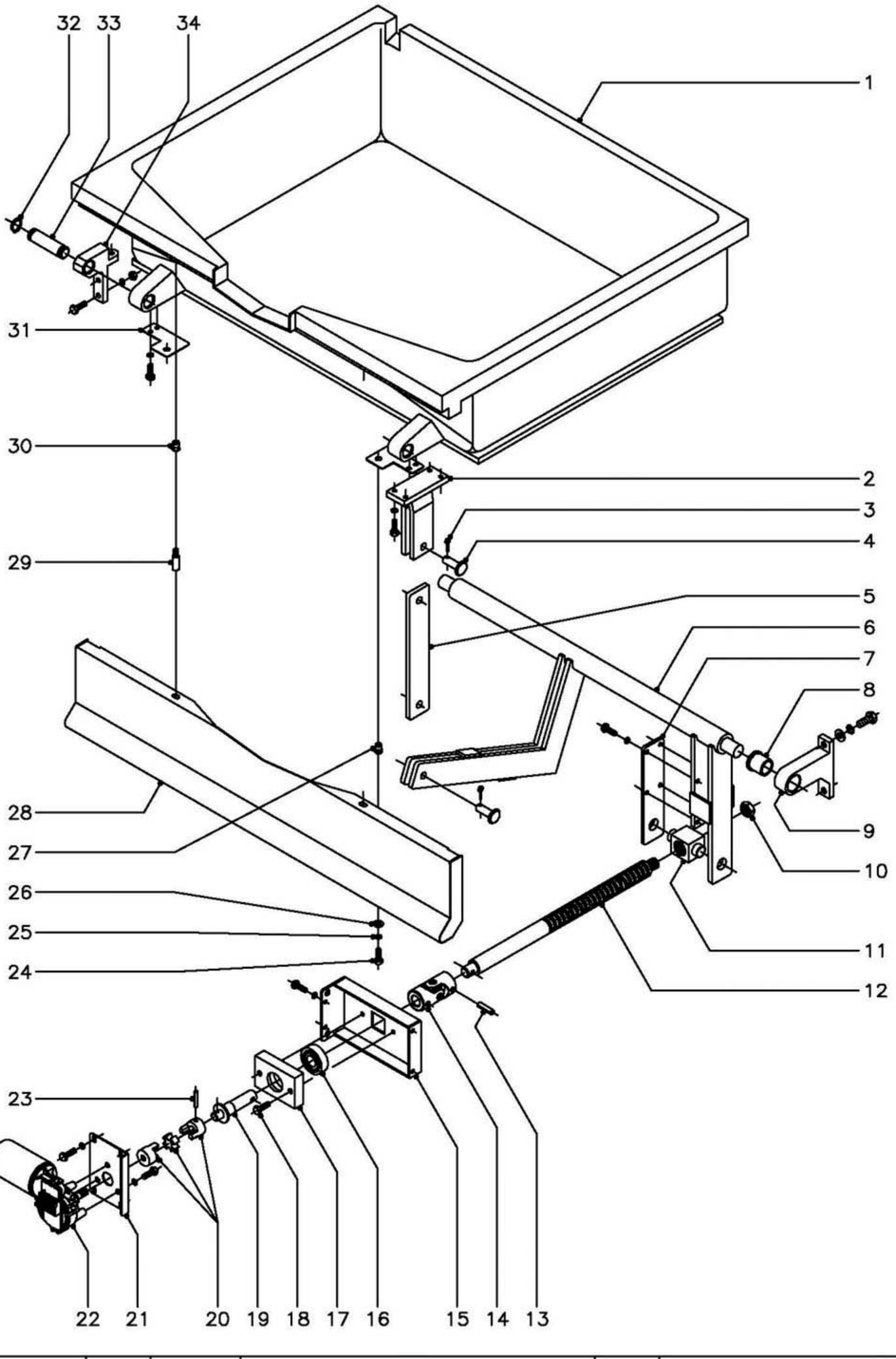


| N plano | Firma | Fecha | Aparato | | Lamina | |
|---|---|---|---|---|---|---|
| C–1199 | | 6–2002 | CUBA<br>SARTEN BASCULANTE 900 (Elev.Motor) | | 3 | Fagor Industrial S.Coop.<br>Oñate |

| MOD. | SARTENES BASCULANTES GAMA 900 | ZONA | CUBA (Elevacion Motor) | PLANO | C-1199 |
|---|---|---|---|---|---|

| ITEM | CODIGO | DENOMINACION | TEXTO | SBG9-10 M | SBG9-10 I M | SBE9-10 M | SBE9-10 I M | SBG9-15 I M | SBE9-15 I M | | | | NOTAS |
|---|---|---|---|---|---|---|---|---|---|---|---|---|---|
| 1 | X156155 | Cuba SBG9-10 | | 1 | - | - | - | | | | | | |
| 1 | X156150 | Cuba SBG9-10 I | | - | 1 | - | - | | | | | | |
| 1 | X146125 | Cuba SBE9-10 | | - | - | 1 | - | | | | | | |
| 1 | X146126 | Cuba SBE9-10 I | | - | - | - | 1 | | | | | | |
| 1 | X286105 | Cuba SBG9-15 I | | - | - | - | - | 1 | - | | | | |
| 1 | X426102 | Cuba SBE9-15 I | | - | - | - | - | - | 1 | | | | |
| 2 | X156157 | Horquilla de giro | | 1 | - | 1 | - | - | - | | | | |
| | Q262040 | Arandela muelle A-6 | | 4 | - | 4 | - | - | - | | | | |
| | Q012042 | Tornillo exagonal M-6x15 | | 4 | - | 4 | - | - | - | | | | |
| 2 | - | Horquilla de giro (soldada a cuba) | | - | 1 | - | 1 | 1 | 1 | | | | |
| 3 | Q352024 | Pasador de aletas Ø4x25 | | 2 | 2 | 2 | 2 | 2 | 2 | | | | |
| 4 | X156123 | Bulon Ø12 | | 2 | 2 | 2 | 2 | 2 | 2 | | | | |
| 5 | X156151 | Brazo | | 1 | 1 | 1 | 1 | 1 | 1 | | | | |
| 6 | X156148 | Brazo elevador | | 1 | 1 | 1 | 1 | - | - | | | | |
| 6 | X286106 | Brazo elevador | | - | - | - | - | 1 | - | | | | |
| 6 | X426103 | Brazo elevador | | - | - | - | - | - | 1 | | | | |
| 7 | X156149 | Brazo lateral | | 1 | 1 | 1 | 1 | 1 | 1 | | | | |
| | Q012042 | Tornillo exagonal M-6x15 | | 4 | 4 | 4 | 4 | 4 | 4 | | | | |
| | Q262040 | Arandela muelle A-6 | | 4 | 4 | 4 | 4 | 4 | 4 | | | | |
| 8 | X109550 | Cojinete | | 2 | 2 | 2 | 2 | 2 | 2 | | | | |
| 9 | X150108 | Soporte giro | | 2 | 2 | 2 | 2 | 2 | 2 | | | | |
| | Q232060 | Arandela plana A-10 | | 4 | 4 | 4 | 4 | 4 | 4 | | | | |
| | Q261060 | Arandela muelle A-10 | | 4 | 4 | 4 | 4 | 4 | 4 | | | | |
| | Q012063 | Tornillo exagonal M-10x20 | | 4 | 4 | 4 | 4 | 4 | 4 | | | | |
| 10 | Q222015 | Tuerca exagonal 3/8" | | 1 | 1 | 1 | 1 | 1 | 1 | | | | |
| 11 | X156154 | Tuerca de husillo | | 1 | 1 | 1 | 1 | 1 | 1 | | | | |
| 12 | X156152 | Husillo | | 1 | 1 | 1 | 1 | 1 | 1 | | | | |
| 13 | Q371027 | Manguito Ø8x30 | | 2 | 2 | 2 | 2 | 2 | 2 | | | | |
| 14 | X126114 | Junta universal | | 1 | 1 | 1 | 1 | 1 | 1 | | | | |

| MOD. | SARTENES BASCULANTES GAMA 900 | ZONA | CUBA (Elevacion Motor) | PLANO | C-1199 |
|---|---|---|---|---|---|

| ITEM | CODIGO | DENOMINACION | TEXTO | SBG9-10 M | SBG9-10 I M | SBE9-10 M | SBE9-10 I M | SBG9-15 I M | SBE9-15 I M | | | | NOTAS |
|---|---|---|---|---|---|---|---|---|---|---|---|---|---|
| 15 | X342607 | Soporte eje motor | | 1 | 1 | 1 | 1 | 1 | 1 | | | | |
| | Q012032 | Tornillo exagonal M-5x15 | | 4 | 4 | 4 | 4 | 4 | 4 | | | | |
| | Q262030 | Arandela muelle A-5 | | 4 | 4 | 4 | 4 | 4 | 4 | | | | |
| 16 | X346109 | Rodamiento SKF | | 1 | 1 | 1 | 1 | 1 | 1 | | | | |
| 17 | X346105 | Soporte rodamiento | | 1 | 1 | 1 | 1 | 1 | 1 | | | | |
| 18 | Q012044 | Tornillo exagonal M-6x25 | | 2 | 2 | 2 | 2 | 2 | 2 | | | | |
| 19 | X346106 | Eje motor | | 1 | 1 | 1 | 1 | 1 | 1 | | | | |
| 20 | X346107 | Acoplamiento elastico | | 1 | 1 | 1 | 1 | 1 | 1 | | | | |
| 21 | X342603 | Soporte motor | | 1 | 1 | 1 | 1 | 1 | 1 | | | | |
| | Q012042 | Tornillo exagonal M-6x15 | | 4 | 4 | 4 | 4 | 4 | 4 | | | | |
| | Q262040 | Arandela muelle A-6 | | 4 | 4 | 4 | 4 | 4 | 4 | | | | |
| 22 | X343020 | Motorreductor elevacion cuba | | 1 | 1 | 1 | 1 | 1 | 1 | | | | |
| | Q012042 | Tornillo exagonal M-6x15 | | 3 | 3 | 3 | 3 | 3 | 3 | | | | |
| | Q262040 | Arandela muelle A-6 | | 3 | 3 | 3 | 3 | 3 | 3 | | | | |
| 23 | Q371032 | Manguito Ø5x30 | | 1 | 1 | 1 | 1 | 1 | 1 | | | | |
| 24 | Q012042 | Tornillo exagonal M-6x15 | | 2 | 2 | 2 | 2 | 2 | 2 | | | | |
| 25 | Q262040 | Arandela muelle A-6 | | 2 | 2 | 2 | 2 | 2 | 2 | | | | |
| 26 | Q302022 | Arandela plana Ø16xØ6x1,2 | | 2 | 2 | 2 | 2 | 2 | 2 | | | | |
| 27 | Q221343 | Remache exagonal M-6 | | 2 | 2 | 2 | 2 | 2 | 2 | | | | |
| 28 | X152830 | Panel portamandos (Cuba fundid.) | | 1 | - | 1 | - | - | - | | | | |
| 28 | X152833 | Panel portamandos (Cuba inox.) | | - | 1 | - | 1 | - | - | | | | |
| 28 | X282815 | Panel portamandos SB-15 | | - | - | - | - | 1 | 1 | | | | |
| 29 | Q151336 | Tornillo soporte guia portamandos | | 2 | 2 | 2 | 2 | 2 | 2 | | | | |
| 30 | Q221343 | Remache exagonal M-6 | | - | 2 | - | 2 | 2 | 2 | | | | |
| 31 | X156156 | Amarre panel portamandos | | 2 | - | 2 | - | - | - | | | | |
| | Q262040 | Arandela muelle A-6 | | 4 | - | 4 | - | - | - | | | | |
| | Q012042 | Tornillo exagonal M-6x15 | | 4 | - | 4 | - | - | - | | | | |
| 32 | Q301020 | Anillo seguridad Ø20x1,2 | | 4 | 4 | 4 | 4 | 4 | 4 | | | | |
| 33 | X109511 | Bulon | | 2 | 2 | 2 | 2 | 2 | 2 | | | | |

| MOD. | SARTENES BASCULANTES GAMA 900 | ZONA | CUBA (Elevacion Motor) | PLANO | C-1199 |
|---|---|---|---|---|---|

| ITEM | CODIGO | DENOMINACION | TEXTO | SBG9-10 M | SBG9-10 I M | SBE9-10 M | SBE9-10 I M | SBG9-15 I M | SBE9-15 I M | | | | NOTAS |
|---|---|---|---|---|---|---|---|---|---|---|---|---|---|
| 34 | X156145 | Soporte giro cuba | | 2 | 2 | 2 | 2 | 2 | 2 | | | | |
| | Q012043 | Tornillo exagonal M-6x20 | | 6 | 6 | 6 | 6 | 6 | 6 | | | | |
| | Q262040 | Arandela muelle A-6 | | 6 | 6 | 6 | 6 | 6 | 6 | | | | |
| | Q162040 | Tuerca exagonal M-6 | | 6 | 6 | 6 | 6 | 6 | 6 | | | | |

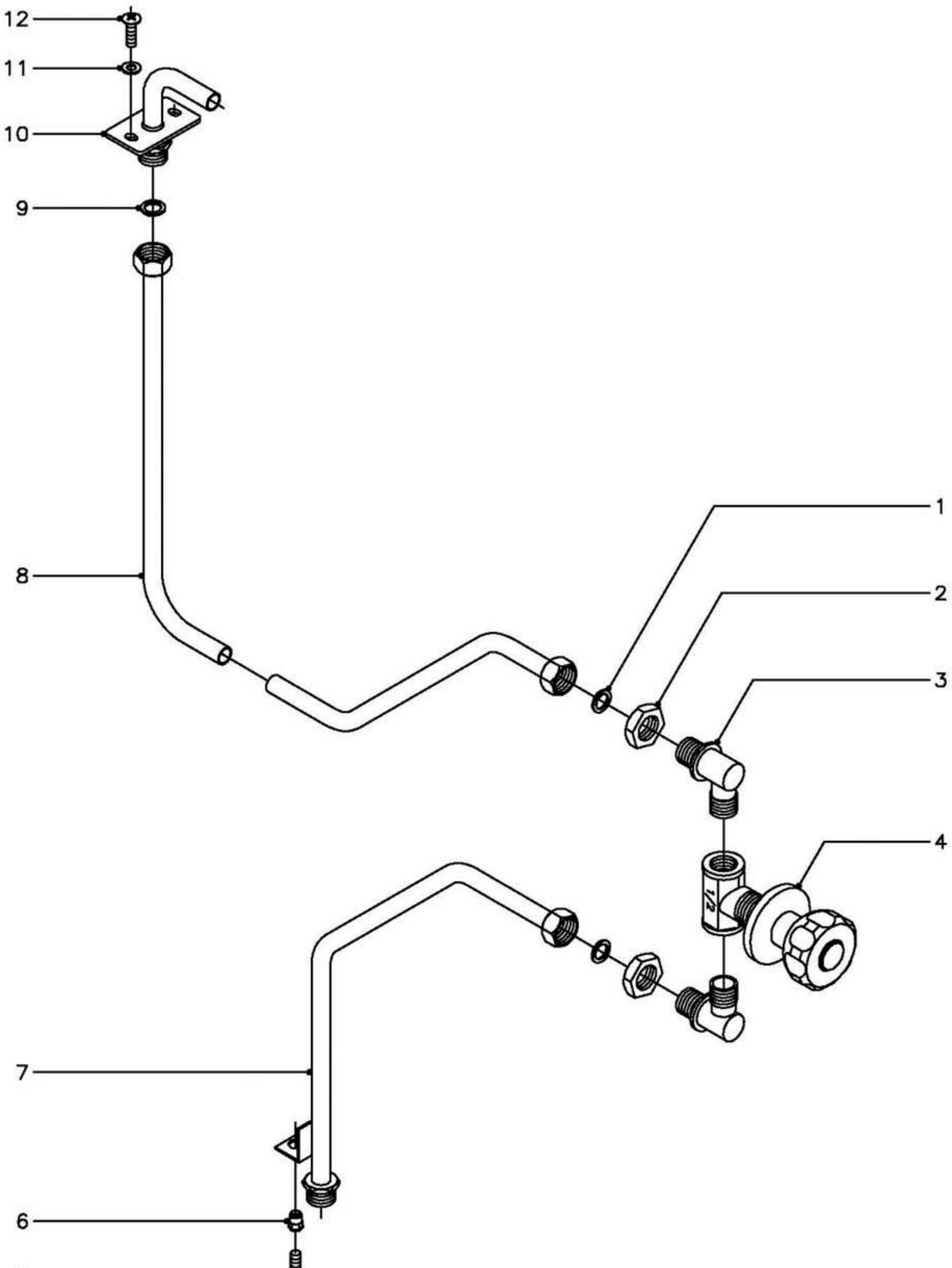


| N plano | Firma | Fecha | Aparato | Lamina | |
|---|---|---|---|---|---|
| C-1200 | | 6-2002 | TOMA DE AGUA<br>SARTEN BASCULANTE 900 | 4 | Fagor Industrial S.Coop. FAGOR<br>Onate |

| MOD. | SARTENES BASCULANTES GAMA 900 | ZONA | TOMA DE AGUA | PLANO | C-1200 |
|---|---|---|---|---|---|

| ITEM | CODIGO | DENOMINACION | TEXTO | SG9-10 SB9-15 | SB9-10 S SB9-15 S | | | | | | | | NOTAS |
|---|---|---|---|---|---|---|---|---|---|---|---|---|---|
| 1 | Q306024 | Arandela junta Ø18xØ12,5x1,5 | | 2 | 2 | | | | | | | | |
| 2 | Q221302 | Tuerca exagonal 1/2" Gas | | 2 | 2 | | | | | | | | |
| 3 | S115013 | Codo | | 2 | 2 | | | | | | | | |
| 4 | S112151 | Llave de paso 1/2" con mando | | 1 | 1 | | | | | | | | |
| 5 | Q012042 | Tornillo exagonal M-6x15 | | 1 | 1 | | | | | | | | |
| 6 | Q221343 | Remache exagonal M-6 | | 1 | 1 | | | | | | | | |
| 7 | X155038 | Conduccion entrada de agua | | 1 | - | | | | | | | | |
| 7 | X245017 | Conduccion entrada de agua susp. | | - | 1 | | | | | | | | |
| 8 | X155040 | Conduccion agua a tubo llenado | | 1 | 1 | | | | | | | | |
| 9 | Q306024 | Arandela junta Ø18xØ12,5x1,5 | | 1 | 1 | | | | | | | | |
| 10 | X156140 | Conjunto tubo de llenado | | 1 | 1 | | | | | | | | |
| 11 | Q232030 | Arandela plana A-5 | | 2 | 2 | | | | | | | | |
| 12 | Q152004 | Tornillo aplastado M-5x13 | | 2 | 2 | | | | | | | | |

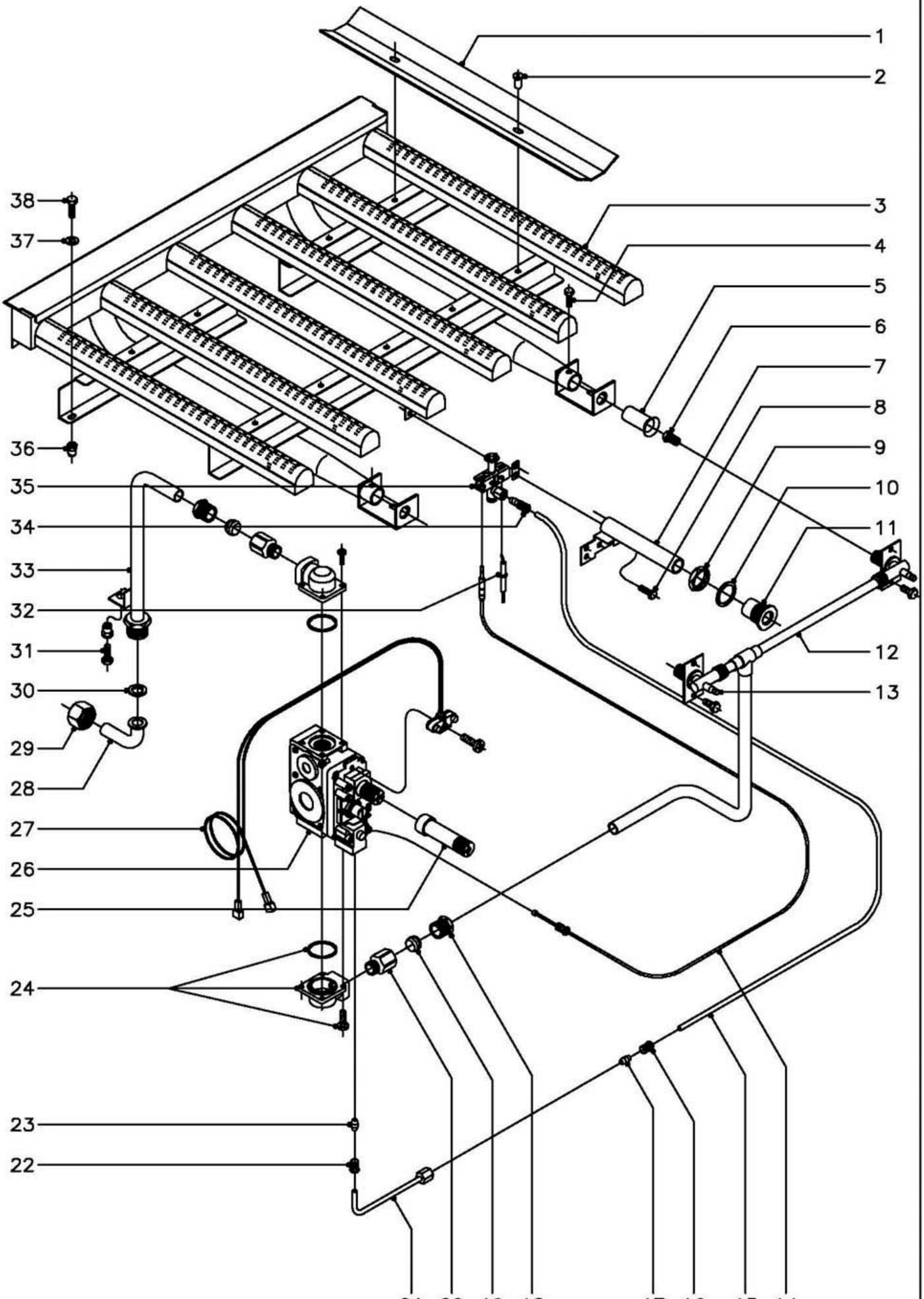


| N plano | Firma | Fecha | Aparato | Lamina | |
|---|---|---|---|---|---|
| C–1201 | | 6–2002 | PARTE FUNCIONAL GAS<br>SARTEN BASCULANTE 900 | 5 | Fagor Industrial S.Coop. FAGOR<br>Oñate |

| MOD. | SARTENES BASCULANTES GAMA 900 | ZONA | PARTE FUNCIONAL GAS | PLANO | C-1201 |
|---|---|---|---|---|---|

| ITEM | CODIGO | DENOMINACION | TEXTO | SBG9-10 | SBG9-15 | | | | | | | | NOTAS |
|---|---|---|---|---|---|---|---|---|---|---|---|---|---|
| 1 | X155720 | Deflector largo | | 3 | 6 | | | | | | | | |
| 1 | X155721 | Deflector corto | | 1 | 1 | | | | | | | | |
| 2 | Q419005 | Remache tubular Ø4x8 | | 8 | 14 | | | | | | | | |
| 3 | X155710 | Quemador | | 1 | - | | | | | | | | |
| 3 | X285710 | Quemador | | - | 1 | | | | | | | | |
| 4 | Q012031 | Tornillo exagonal M-5x10 | | 2 | 2 | | | | | | | | |
| 5 | U325707 | Regulador de aire | | 2 | 2 | | | | | | | | |
| 6 | U052401 | Tobera Ø1,45 ( Butano Propano ) | | 2 | 3 | | | | | | | | |
| 6 | U262400 | Tobera Ø2,15 ( Gas Natural ) | | 2 | 3 | | | | | | | | |
| 6 | X102403 | Tobera Ø4,58 ( Gas Villa ) | | 2 | 3 | | | | | | | | |
| 7 | X155035 | Tubo de encendido | | 1 | 1 | | | | | | | | |
| 8 | Q012031 | Tornillo exagonal M-5x10 | | 2 | 2 | | | | | | | | |
| 9 | Q221324 | Tuerca exagonal 3/4" | | 1 | 1 | | | | | | | | |
| 10 | Q306027 | Arandela plana Ø33,8x27x1,5 | | 1 | 1 | | | | | | | | |
| 11 | S112804 | Embellecedor tubo de encendido | | 1 | 1 | | | | | | | | |
| 12 | X155030 | Conduccion a quemador | | 1 | - | | | | | | | | |
| 12 | X285015 | Conduccion a quemador | | - | 1 | | | | | | | | |
| | Q012031 | Tornillo exagonal M-5x10 | | 4 | 4 | | | | | | | | |
| 13 | Q153002 | Tornillo tapon | | 2 | 3 | | | | | | | | |
| 14 | U562130 | Termopar L=850 | | 1 | 1 | | | | | | | | |
| 15 | X155032 | Tubo piloto | | 1 | - | | | | | | | | |
| 15 | X285017 | Tubo piloto | | - | 1 | | | | | | | | |
| 16 | U195009 | Manguito empalme | | 1 | 1 | | | | | | | | |
| 17 | X205028 | Bicono Ø6 | | 1 | 1 | | | | | | | | |
| 18 | X012104 | Manguito para racord 1/2" | | 2 | 2 | | | | | | | | |
| 19 | X012105 | Bicono Ø16 | | 2 | 2 | | | | | | | | |
| 20 | X162101 | Racord 1/2" | | 2 | 2 | | | | | | | | |
| 21 | X155043 | Tubo piloto a valvula | | 1 | 1 | | | | | | | | |
| 22 | U195009 | Manguito empalme | | 1 | 1 | | | | | | | | |

| MOD. | SARTENES BASCULANTES GAMA 900 | ZONA | PARTE FUNCIONAL GAS | PLANO | C-1201 |
|---|---|---|---|---|---|

| ITEM | CODIGO | DENOMINACION | TEXTO | SBG9-10 | SBG9-15 | | | | | | | | NOTAS |
|---|---|---|---|---|---|---|---|---|---|---|---|---|---|
| 23 | X205028 | Bicono Ø6 | | 1 | 1 | | | | | | | | |
| 24 | X153004 | Codo 1/2" SIT | | 2 | 2 | | | | | | | | |
| | | Junta torica | | 2 | 2 | | | | | | | | |
| | | Tornillo amarre codo | | 8 | 8 | | | | | | | | |
| 25 | X262100 | Alargadera pulsador | | 1 | 1 | | | | | | | | |
| 26 | X163000 | Electrovalvula 820 nova ( 50 Hz.) | | 1 | 1 | | | | | | | | |
| | X163020 | Bobina para electrovalvula ( 60 Hz.) | | 1 | 1 | | | | | | | | |
| 27 | R275027 | Cableado electrosit | | 1 | 1 | | | | | | | | |
| 28 | U565007 | Codo entrada gas | | 1 | 1 | | | | | | | | |
| 29 | U725006 | Tuerca 3/4" | | 1 | 1 | | | | | | | | |
| 30 | Q306052 | Arandela junta Ø23,5x15,5x3 | | 1 | 1 | | | | | | | | |
| 31 | Q012042 | Tornillo exagonal M-6x15 | | 1 | 1 | | | | | | | | |
| | Q221343 | Remache exagonal M-6 | | 1 | 1 | | | | | | | | |
| 32 | X012101 | Bujia de encendido | | 1 | 1 | | | | | | | | |
| 33 | X155033 | Conduccion entrada gas | | 1 | 1 | | | | | | | | |
| 34 | U134323 | Racord c/bicono Ø6 | | 1 | 1 | | | | | | | | |
| 35 | U322118 | Piloto completo | | 1 | 1 | | | | | | | | |
| 36 | Q221342 | Remache exagonal M-5 | | 2 | 2 | | | | | | | | |
| 37 | Q302022 | Arandela plana Ø16xØ6x1,2 | | 2 | 2 | | | | | | | | |
| 38 | Q012031 | Tornillo exagonal M-5x10 | | 2 | 2 | | | | | | | | |
| | | | | | | | | | | | | | |
| | | | | | | | | | | | | | |
| | | | | | | | | | | | | | |
| | | | | | | | | | | | | | |
| | | | | | | | | | | | | | |
| | | | | | | | | | | | | | |
| | | | | | | | | | | | | | |
| | | | | | | | | | | | | | |
| | | | | | | | | | | | | | |

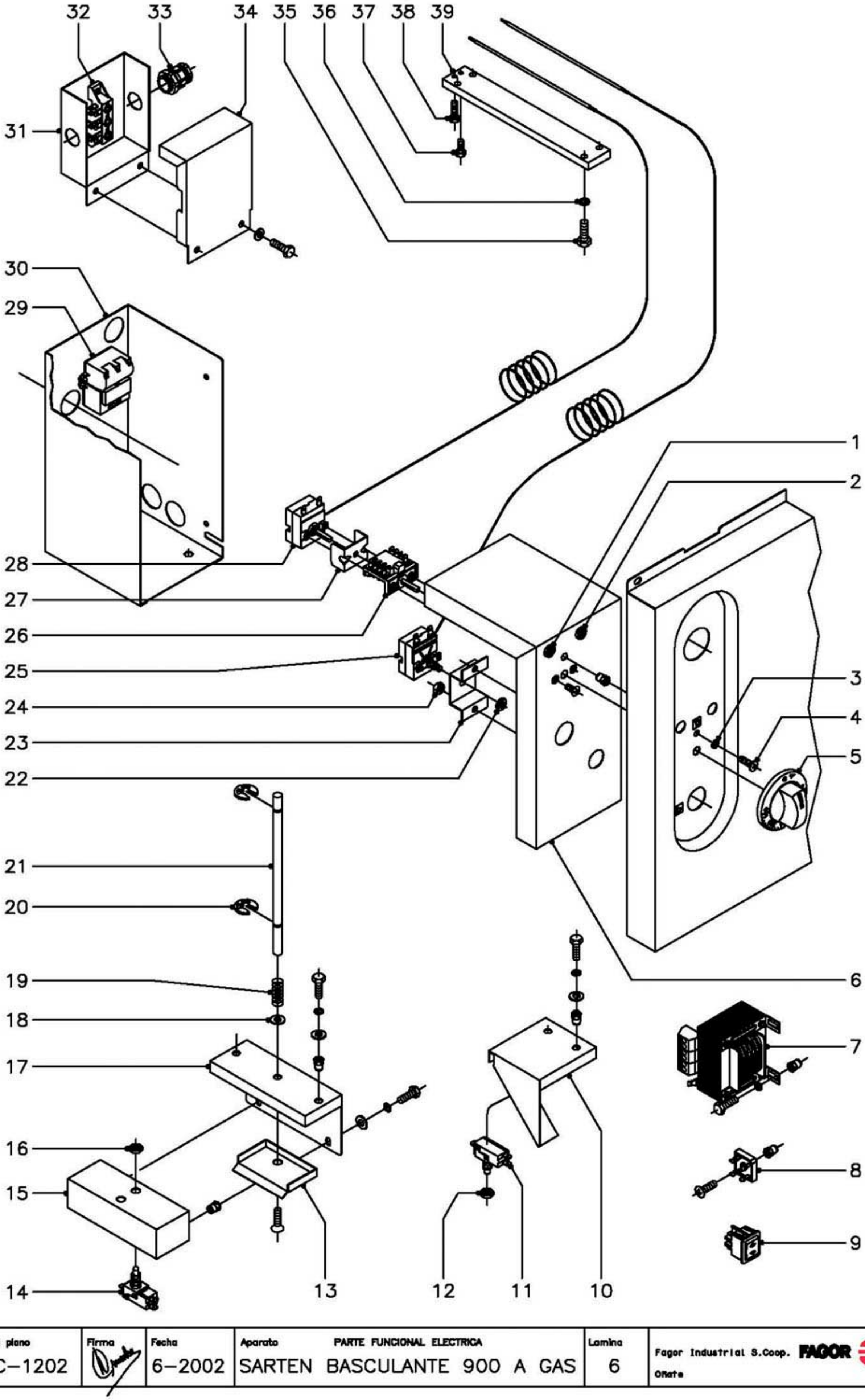


| N plano | Firma | Fecha | Aparato | Lamina | |
|---|---|---|---|---|---|
| C–1202 | | 6–2002 | PARTE FUNCIONAL ELECTRICA<br>SARTEN BASCULANTE 900 A GAS | 6 | Fagor Industrial S.Coop.<br>Oñate |

| MOD. | SARTENES BASCULANTES GAMA 900 | ZONA | PARTE FUNCIONAL ELECTRICA ( GAS ) | PLANO | C-1202 |
|---|---|---|---|---|---|

| ITEM | CODIGO | DENOMINACION | TEXTO | SBG9-10 | SBG9-10 I | SBG9-10 M | SBG9-10 I M | SBG9-15 I M | | | | | NOTAS |
|---|---|---|---|---|---|---|---|---|---|---|---|---|---|
| 1 | X143017 | Piloto verde | | 1 | 1 | 1 | 1 | | | | | | |
| 2 | X143018 | Piloto ambar | | 1 | 1 | 1 | 1 | | | | | | |
| 3 | Q262030 | Arandela muelle A-5 | | 1 | 1 | 1 | 1 | | | | | | |
| 4 | Q152004 | Tornillo aplastado M-5x13 | | 1 | 1 | 1 | 1 | | | | | | |
| | Q221342 | Remache exagonal M-5 | | 1 | 1 | 1 | 1 | | | | | | |
| 5 | X152111 | Boton de mando Ø6 | | 1 | 1 | 1 | 1 | | | | | | |
| | Q281000 | Anillo de compresion mando | | 1 | 1 | 1 | 1 | | | | | | |
| 6 | X152667 | Tapa caja | | 1 | 1 | 1 | 1 | | | | | | |
| 7 | X343021 | Transformador | | - | - | 1 | 1 | | | | | | |
| | Q012031 | Tornillo exagonal M-5x10 | | - | - | 4 | 4 | | | | | | |
| | Q302022 | Arandela plana Ø16xØ6x1,2 | | - | - | 4 | 4 | | | | | | |
| | Q221342 | Remache exagonal M-5 | | - | - | 4 | 4 | | | | | | |
| | X342605 | Tapa transformador | | - | - | 1 | 1 | | | | | | |
| | X342606 | Caja transformador | | - | - | 1 | 1 | | | | | | |
| | Q012031 | Tornillo exagonal M-5x10 | | - | - | 4 | 4 | | | | | | |
| | Q302022 | Arandela plana Ø16xØ6x1,2 | | - | - | 4 | 4 | | | | | | |
| | X342609 | Escuadra amarre tapa transforma. | | - | - | 1 | 1 | | | | | | |
| | Q419005 | Remache tubular Ø4x8 | | - | - | 4 | 4 | | | | | | |
| 8 | X343022 | Puente rectificador | | - | - | 1 | 1 | | | | | | |
| | Q152004 | Tornillo aplastado M-5x13 | | - | - | 1 | 1 | | | | | | |
| | Q221342 | Remache exagonal M-5 | | - | - | 1 | 1 | | | | | | |
| 9 | X343009 | Pulsador doble con protector | | - | - | 1 | 1 | | | | | | |
| | X342608 | Soporte pulsador | | - | - | 1 | 1 | | | | | | |
| | Q012042 | Tornillo exagonal M-6x15 | | - | - | 4 | 4 | | | | | | |
| | Q162040 | Tuerca exagonal M-6 | | - | - | 4 | 4 | | | | | | |
| | Q302022 | Arandela plana Ø16xØ6x1,2 | | - | - | 4 | 4 | | | | | | |
| 10 | X342602 | Soporte micro | | - | - | 1 | 1 | | | | | | |
| | Q012031 | Tornillo exagonal M-5x10 | | - | - | 2 | 2 | | | | | | |
| | Q262030 | Arandela muelle A-5 | | - | - | 2 | 2 | | | | | | |

| MOD. | SARTENES BASCULANTES GAMA 900 | ZONA | PARTE FUNCIONAL ELECTRICA ( GAS ) | PLANO | C-1202 |
|---|---|---|---|---|---|

| ITEM | CODIGO | DENOMINACION | TEXTO | SBG9-10 | SBG9-10 I | SBG9-10 M | SBG9-10 I M SBG9-15 I M | | | | | | NOTAS |
|---|---|---|---|---|---|---|---|---|---|---|---|---|---|
| | Q302022 | Arandela plana Ø16xØ6x1,2 | | - | - | 2 | 2 | | | | | | |
| | Q221342 | Remache exagonal M-5 | | - | - | 2 | 2 | | | | | | |
| 11 | X343015 | Microrruptor | | - | - | 1 | 1 | | | | | | |
| 12 | Q222005 | Tuerca exagonal M-10x0,75 | | - | - | 1 | 1 | | | | | | |
| 13 | X152646 | Proteccion superior | | 1 | 1 | 1 | 1 | | | | | | |
| | Q152024 | Tornillo avellanado M-4x8 | | 1 | 1 | 1 | 1 | | | | | | |
| 14 | X343015 | Microrruptor | | 1 | 1 | 2 | 2 | | | | | | |
| 15 | X152681 | Caja portamicro | | 1 | 1 | 1 | 1 | | | | | | |
| | Q221342 | Remache exagonal M-5 | | 2 | 2 | 2 | 2 | | | | | | |
| | Q302022 | Arandela plana Ø16xØ6x1,2 | | 2 | 2 | 2 | 2 | | | | | | |
| | Q262030 | Arandela muelle A-5 | | 2 | 2 | 2 | 2 | | | | | | |
| | Q012031 | Tornillo exagonal M-5x10 | | 2 | 2 | 2 | 2 | | | | | | |
| 16 | Q222005 | Tuerca exagonal M-10x0,75 | | 1 | 1 | 2 | 2 | | | | | | |
| 17 | X152680 | Soporte caja portamicro | | 1 | 1 | 1 | 1 | | | | | | |
| | Q221342 | Remache exagonal M-5 | | 2 | 2 | 2 | 2 | | | | | | |
| | Q302022 | Arandela plana Ø16xØ6x1,2 | | 2 | 2 | 2 | 2 | | | | | | |
| | Q262030 | Arandela muelle A-5 | | 2 | 2 | 2 | 2 | | | | | | |
| | Q012031 | Tornillo exagonal M-5x10 | | 2 | 2 | 2 | 2 | | | | | | |
| 18 | Q232050 | Arandela plana A-8 | | 1 | 1 | 1 | 1 | | | | | | |
| 19 | Z700603 | Muelle | | 1 | 1 | 1 | 1 | | | | | | |
| 20 | Q271033 | Arandela de seguridad Ø6 | | 2 | 2 | 2 | 2 | | | | | | |
| 21 | X152682 | Eje pulsador micro | | 1 | 1 | 1 | 1 | | | | | | |
| 22 | Q223022 | Tuerca exagonal M-8x1 | | 1 | 1 | 1 | 1 | | | | | | |
| 23 | X152661 | Soporte limitador | | 1 | 1 | 1 | 1 | | | | | | |
| 24 | Q162030 | Tuerca exagonal M-5 | | 2 | 2 | 2 | 2 | | | | | | |
| 25 | R612103 | Termostato limitador | | 1 | 1 | 1 | 1 | | | | | | |
| 26 | X163007 | Conmutador acople termostato | | 1 | 1 | 1 | 1 | | | | | | |
| | Q151320 | Tornillo alomado M-4x6 | | 2 | 2 | 2 | 2 | | | | | | |
| 27 | X313001 | "U" soporte termostato | | 1 | 1 | 1 | 1 | | | | | | |

| MOD. | SARTENES BASCULANTES GAMA 900 | ZONA | PARTE FUNCIONAL ELECTRICA ( GAS ) | PLANO | C-1202 |
|---|---|---|---|---|---|

| ITEM | CODIGO | DENOMINACION | TEXTO | SBG9-10 | SBG9-10 I | SBG9-10 M | SBG9-10 I M | SBG9-15 I M | | | | | NOTAS |
|---|---|---|---|---|---|---|---|---|---|---|---|---|---|
| 28 | X153000 | Termostato | | 1 | 1 | 1 | 1 | | | | | | |
| 29 | R073007 | Encendedor | | 1 | 1 | 1 | 1 | | | | | | |
| 30 | X152656 | Soporte valvula (caja electrica) | | 1 | 1 | 1 | 1 | | | | | | |
| 31 | X342601 | Cuadro regleta | | 1 | 1 | 1 | 1 | | | | | | |
| 32 | U183046 | Regleta toma corriente | | 1 | 1 | 1 | 1 | | | | | | |
| 33 | R073004 | Prensaestopas | | 2 | 2 | 2 | 2 | | | | | | |
| 34 | X342600 | Tapa caja regleta | | 1 | 1 | 1 | 1 | | | | | | |
| | Q302022 | Arandela plana Ø16xØ6x1,2 | | 2 | 2 | 2 | 2 | | | | | | |
| | Q012042 | Tornillo exagonal M-6x15 | | 2 | 2 | 2 | 2 | | | | | | |
| 35 | Q012042 | Tornillo exagonal M-6x15 | | 4 | - | 4 | - | | | | | | |
| 36 | Q262040 | Arandela muelle A-6 | | 4 | - | 4 | - | | | | | | |
| 37 | Q012032 | Tornillo exagonal M-5x15 | | 1 | 1 | 1 | 1 | | | | | | Amarre bulbo |
| 38 | Q012033 | Tornillo exagonal M-5x20 | | 1 | 1 | 1 | 1 | | | | | | Amarre bulbo |
| 39 | X156147 | Cubrebulbo | | 1 | - | 1 | - | | | | | | |

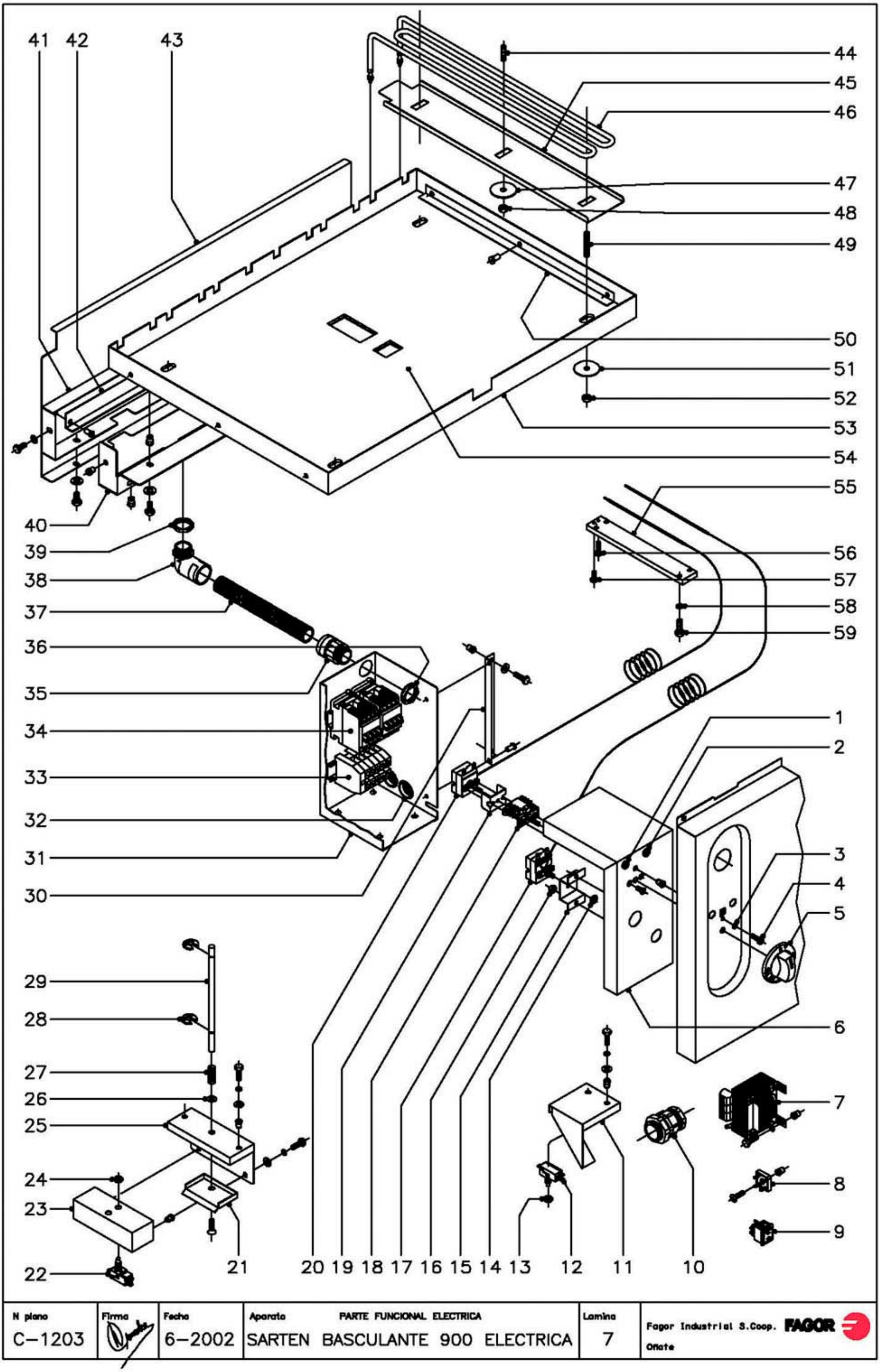


| N plano | Firma | Fecha | Aparato | Lamina | |
|---|---|---|---|---|---|
| C–1203 | | 6–2002 | PARTE FUNCIONAL ELECTRICA<br>SARTEN BASCULANTE 900 ELECTRICA | 7 | Fagor Industrial S.Coop. FAGOR<br>Oñate |

| MOD. | SARTENES BASCULANTES GAMA 900 | ZONA | PARTE FUNCIONAL ELECTRICA ( ELECTRICAS ) | PLANO | C-1203 |
|---|---|---|---|---|---|

| ITEM | CODIGO | DENOMINACION | TEXTO | SBE9-10 | SBE9-10 I | SBE9-10 M | SBE9-10 I M | SBE9-15 I M | | | | | NOTAS |
|---|---|---|---|---|---|---|---|---|---|---|---|---|---|
| 1 | X143017 | Piloto verde | | 1 | 1 | 1 | 1 | 1 | | | | | |
| 2 | X143018 | Piloto ambar | | 1 | 1 | 1 | 1 | 1 | | | | | |
| 3 | Q262030 | Arandela muelle A-5 | | 1 | 1 | 1 | 1 | 1 | | | | | |
| 4 | Q152004 | Tornillo aplastado M-5x13 | | 1 | 1 | 1 | 1 | 1 | | | | | |
| | Q221342 | Remache exagonal M-5 | | 1 | 1 | 1 | 1 | 1 | | | | | |
| 5 | U673017 | Boton de mando Ø6 | | 1 | 1 | 1 | 1 | 1 | | | | | |
| | Q281000 | Anillo de compresion mando | | 1 | 1 | 1 | 1 | 1 | | | | | |
| 6 | X152667 | Tapa caja | | 1 | 1 | 1 | 1 | 1 | | | | | |
| 7 | X343021 | Transformador | | - | - | 1 | 1 | 1 | | | | | |
| | Q012031 | Tornillo exagonal M-5x10 | | - | - | 4 | 4 | 4 | | | | | |
| | Q302022 | Arandela plana Ø16xØ6x1,2 | | - | - | 4 | 4 | 4 | | | | | |
| | Q221342 | Remache exagonal M-5 | | - | - | 4 | 4 | 4 | | | | | |
| | X342605 | Tapa transformador | | - | - | 1 | 1 | 1 | | | | | |
| | X342606 | Caja transformador | | - | - | 1 | 1 | 1 | | | | | |
| | Q012031 | Tornillo exagonal M-5x10 | | - | - | 4 | 4 | 4 | | | | | |
| | Q302022 | Arandela plana Ø16xØ6x1,2 | | - | - | 4 | 4 | 4 | | | | | |
| | X342609 | Escuadra amarre tapa transforma. | | - | - | 1 | 1 | 1 | | | | | |
| | Q419005 | Remache tubular Ø4x8 | | - | - | 4 | 4 | 4 | | | | | |
| 8 | X343022 | Puente rectificador | | - | - | 1 | 1 | 1 | | | | | |
| | Q152004 | Tornillo aplastado M-5x13 | | - | - | 1 | 1 | 1 | | | | | |
| | Q221342 | Remache exagonal M-5 | | - | - | 1 | 1 | 1 | | | | | |
| 9 | X343009 | Pulsador doble con protector | | - | - | 1 | 1 | 1 | | | | | |
| | X342608 | Soporte pulsador | | - | - | 1 | 1 | 1 | | | | | |
| | Q012042 | Tornillo exagonal M-6x15 | | - | - | 4 | 4 | 4 | | | | | |
| | Q162040 | Tuerca exagonal M-6 | | - | - | 4 | 4 | 4 | | | | | |
| | Q302022 | Arandela plana Ø16xØ6x1,2 | | - | - | 4 | 4 | 4 | | | | | |
| 10 | R033002 | Prensaestopas | | 1 | 1 | 1 | 1 | 1 | | | | | |
| 11 | X342602 | Soporte micro | | - | - | 1 | 1 | 1 | | | | | |
| | Q012031 | Tornillo exagonal M-5x10 | | - | - | 2 | 2 | 2 | | | | | |

| MOD. | SARTENES BASCULANTES GAMA 900 | ZONA | PARTE FUNCIONAL ELECTRICA ( ELECTRICAS ) | PLANO | C-1203 |
|---|---|---|---|---|---|

| ITEM | CODIGO | DENOMINACION | TEXTO | SBE9-10 | SBE9-10 I | SBE9-10 M | SBE9-10 I M | SBE9-15 I M | | | | | NOTAS |
|---|---|---|---|---|---|---|---|---|---|---|---|---|---|
| | Q262030 | Arandela muelle A-5 | | - | - | 2 | 2 | 2 | | | | | |
| | Q302022 | Arandela plana Ø16xØ6x1,2 | | - | - | 2 | 2 | 2 | | | | | |
| | Q221342 | Remache exagonal M-5 | | - | - | 2 | 2 | 2 | | | | | |
| 12 | X343015 | Microrruptor | | - | - | 1 | 1 | 1 | | | | | |
| 13 | Q222005 | Tuerca exagonal M-10x0,75 | | - | - | 1 | 1 | 1 | | | | | |
| 14 | Q223022 | Tuerca exagonal M-8x1 | | 1 | 1 | 1 | 1 | 1 | | | | | |
| 15 | X152661 | Soporte limitador | | 1 | 1 | 1 | 1 | 1 | | | | | |
| 16 | Q162030 | Tuerca exagonal M-5 | | 2 | 2 | 2 | 2 | 2 | | | | | |
| 17 | R612103 | Termostato limitador | | 1 | 1 | 1 | 1 | 1 | | | | | |
| 18 | X163007 | Conmutador acople termostato | | 1 | 1 | 1 | 1 | 1 | | | | | |
| | Q151320 | Tornillo alomado M-4x6 | | 2 | 2 | 2 | 2 | 2 | | | | | |
| 19 | X313001 | 'U" soporte termostato | | 1 | 1 | 1 | 1 | 1 | | | | | |
| 20 | X153000 | Termostato | | 1 | 1 | 1 | 1 | 1 | | | | | |
| 21 | X152646 | Proteccion superior | | 1 | 1 | 1 | 1 | 1 | | | | | |
| | Q152024 | Tornillo avellanado M-4x8 | | 1 | 1 | 1 | 1 | 1 | | | | | |
| 22 | X343015 | Microrruptor | | 1 | 1 | 2 | 2 | 2 | | | | | |
| 23 | X152681 | Caja portamicro | | 1 | 1 | 1 | 1 | 1 | | | | | |
| | Q221342 | Remache exagonal M-5 | | 2 | 2 | 2 | 2 | 2 | | | | | |
| | Q302022 | Arandela plana Ø16xØ6x1,2 | | 2 | 2 | 2 | 2 | 2 | | | | | |
| | Q262030 | Arandela muelle A-5 | | 2 | 2 | 2 | 2 | 2 | | | | | |
| | Q012031 | Tornillo exagonal M-5x10 | | 2 | 2 | 2 | 2 | 2 | | | | | |
| 24 | Q222005 | Tuerca exagonal M-10x0,75 | | 1 | 1 | 2 | 2 | 2 | | | | | |
| 25 | X152680 | Soporte caja portamicro | | 1 | 1 | 1 | 1 | 1 | | | | | |
| | Q221342 | Remache exagonal M-5 | | 2 | 2 | 2 | 2 | 2 | | | | | |
| | Q302022 | Arandela plana Ø16xØ6x1,2 | | 2 | 2 | 2 | 2 | 2 | | | | | |
| | Q262030 | Arandela muelle A-5 | | 2 | 2 | 2 | 2 | 2 | | | | | |
| | Q012031 | Tornillo exagonal M-5x10 | | 2 | 2 | 2 | 2 | 2 | | | | | |
| 26 | Q232050 | Arandela plana A-8 | | 1 | 1 | 1 | 1 | 1 | | | | | |
| 27 | Z700603 | Muelle | | 1 | 1 | 1 | 1 | 1 | | | | | |

| MOD. | SARTENES BASCULANTES GAMA 900 | ZONA | PARTE FUNCIONAL ELECTRICA ( ELECTRICAS ) | PLANO | C-1203 |
|---|---|---|---|---|---|

| ITEM | CODIGO | DENOMINACION | TEXTO | SBE9-10 | SBE9-10 I | SBE9-10 M | SBE9-10 I M | SBE9-15 I M | | | | | NOTAS |
|---|---|---|---|---|---|---|---|---|---|---|---|---|---|
| 28 | Q271033 | Arandela de seguridad Ø6 | | 2 | 2 | 2 | 2 | 2 | | | | | |
| 29 | X152682 | Eje pulsador micro | | 1 | 1 | 1 | 1 | 1 | | | | | |
| 30 | X152657 | Soporte caja | | 1 | 1 | 1 | 1 | 1 | | | | | |
| | Q221342 | Remache exagonal M-5 | | 2 | 2 | 2 | 2 | 2 | | | | | |
| | Q302022 | Arandela plana Ø16xØ6x1,2 | | 2 | 2 | 2 | 2 | 2 | | | | | |
| | Q012031 | Tornillo exagonal M-5x10 | | 2 | 2 | 2 | 2 | 2 | | | | | |
| 31 | X152656 | Soporte valvula (caja electrica) | | 1 | 1 | 1 | 1 | 1 | | | | | |
| | Q419005 | Remache tubular Ø4x8 | | 2 | 2 | 2 | 2 | 2 | | | | | |
| 32 | X723014 | Pasamuros Ø30 | | 2 | 2 | 2 | 2 | 2 | | | | | |
| 33 | P453025 | Borna fases 10 (gris) | | 3 | 3 | 3 | 3 | - | | | | | |
| | Z263302 | Borna neutro 10 (azul) | | 1 | 1 | 1 | 1 | - | | | | | |
| | P453026 | Borna tierra 10 (amarillo-verde) | | 1 | 1 | 1 | 1 | - | | | | | |
| | Z263303 | Tope final | | 1 | 1 | 1 | 1 | - | | | | | |
| 33 | Z683069 | Borna fases 16 (gris) | | - | - | - | - | 3 | | | | | |
| | Z683097 | Borna neutro 16 (azul) | | - | - | - | - | 1 | | | | | |
| | Z683070 | Borna tierra 16 (amarillo-verde) | | - | - | - | - | 1 | | | | | |
| | Z683096 | Tope final | | - | - | - | - | 1 | | | | | |
| | Z403016 | Guia contactor L=100 | | 1 | 1 | 1 | 1 | 1 | | | | | |
| | Q419005 | Remache tubular Ø4x8 | | 2 | 2 | 2 | 2 | 2 | | | | | |
| 34 | R663031 | Contactor 3TF3010-OAL2 | | 2 | 2 | 2 | 2 | - | | | | | |
| 34 | X183011 | Contactor 3RT1024-1AN20 | | - | - | - | - | 2 | | | | | |
| | Z403016 | Guia contactor L=100 | | 1 | 1 | 1 | 1 | 1 | | | | | |
| | Q419005 | Remache tubular Ø4x8 | | 2 | 2 | 2 | 2 | 2 | | | | | |
| 35 | X713021 | Racord | | 1 | 1 | 1 | 1 | 1 | | | | | |
| 36 | X713022 | Tuerca PG-21 | | 1 | 1 | 1 | 1 | 1 | | | | | |
| 37 | 3712300 | Tubo PG-21 L=850 mm. | | 1 | 1 | 1 | 1 | 1 | | | | | |
| 38 | Z703006 | Racord a 90º | | 1 | 1 | 1 | 1 | 1 | | | | | |
| 39 | X143012 | Contratuerca laton | | 1 | 1 | 1 | 1 | 1 | | | | | |
| 40 | X142651 | Cubierta de bornas 10 | | 1 | 1 | 1 | 1 | - | | | | | |

| MOD. | SARTENES BASCULANTES GAMA 900 | ZONA | PARTE FUNCIONAL ELECTRICA ( ELECTRICAS ) | PLANO | C-1203 |
|---|---|---|---|---|---|

| ITEM | CODIGO | DENOMINACION | TEXTO | SBE9-10 | SBE9-10 I | SBE9-10 M | SBE9-10 I M | SBE9-15 I M | | | | | NOTAS |
|---|---|---|---|---|---|---|---|---|---|---|---|---|---|
| 40 | X422616 | Cubierta de bornas 15 | | - | - | - | - | 1 | | | | | |
| | Q221342 | Remache exagonal M-5 | | 3 | 3 | 3 | 3 | 4 | | | | | |
| | Q302022 | Arandela plana Ø16xØ6x1,2 | | 3 | 3 | 3 | 3 | 4 | | | | | |
| | Q012032 | Tornillo exagonal M-5x15 | | 3 | 3 | 3 | 3 | 4 | | | | | |
| 41 | X142652 | Tapa cubierta bornas 10 | | 1 | 1 | 1 | 1 | - | | | | | |
| 41 | X422617 | Tapa cubierta bornas 15 | | - | - | - | - | 1 | | | | | |
| | Q221342 | Remache exagonal M-5 | | 2 | 2 | 2 | 2 | 2 | | | | | |
| | Q302022 | Arandela plana Ø16xØ6x1,2 | | 2 | 2 | 2 | 2 | 2 | | | | | |
| | Q012032 | Tornillo exagonal M-5x15 | | 2 | 2 | 2 | 2 | 2 | | | | | |
| 42 | X402601 | Escuadra separador resistencias | | 2 | 2 | 2 | 2 | 3 | | | | | |
| | Q419005 | Remache tubular Ø4x8 | | 4 | 4 | 4 | 4 | 6 | | | | | |
| 43 | X142653 | Proteccion agua cuba 10 | | 1 | 1 | 1 | 1 | - | | | | | |
| 43 | X422618 | Proteccion agua cuba 15 | | - | - | - | - | 1 | | | | | |
| | Q221342 | Remache exagonal M-5 | | 3 | 3 | 3 | 3 | 4 | | | | | |
| | Q302022 | Arandela plana Ø16xØ6x1,2 | | 3 | 3 | 3 | 3 | 4 | | | | | |
| | Q012032 | Tornillo exagonal M-5x15 | | 3 | 3 | 3 | 3 | 4 | | | | | |
| 44 | Q131555 | Varilla roscada M-8x30 | | 14 | 14 | 14 | 14 | 21 | | | | | |
| 45 | X142620 | Amarre resistencias | | 6 | 6 | 6 | 6 | 9 | | | | | |
| 46 | X143010 | Resistencia (2000 W., 230 V.) | | 6 | 6 | 6 | 6 | 9 | | | | | |
| 47 | Q302024 | Arandela plana Ø44xØ9x1,5 | | 14 | 14 | 14 | 14 | 21 | | | | | |
| 48 | Q162050 | Tuerca exagonal M-8 | | 14 | 14 | 14 | 14 | 21 | | | | | |
| 49 | Q131558 | Varilla roscada M-8x60 | | 4 | 4 | 4 | 4 | 6 | | | | | |
| 50 | X142609 | Amarre aislante | | 3 | 3 | 3 | 3 | 3 | | | | | |
| | Q419005 | Remache tubular Ø4x8 | | 9 | 9 | 9 | 9 | 9 | | | | | |
| 51 | Q302024 | Arandela plana Ø44xØ9x1,5 | | 4 | 4 | 4 | 4 | 6 | | | | | |
| 52 | Q162050 | Tuerca exagonal M-8 | | 4 | 4 | 4 | 4 | 6 | | | | | |
| 53 | X142650 | Cubierta resistencias 10 | | 1 | 1 | 1 | 1 | - | | | | | |
| 53 | X422615 | Cubierta resistencias 15 | | - | - | - | - | 1 | | | | | |
| 54 | X142656 | Aislante cubierta barlan 730x520x5 | | 1 | 1 | 1 | 1 | - | | | | | |

| MOD. | SARTENES BASCULANTES GAMA 900 | ZONA | PARTE FUNCIONAL ELECTRICA ( ELECTRICAS ) | PLANO | C-1203 |
|---|---|---|---|---|---|

| ITEM | CODIGO | DENOMINACION | TEXTO | SBE9-10 | SBE9-10 I | SBE9-10 M | SBE9-10 I M | SBE9-15 I M | | | | | NOTAS |
|---|---|---|---|---|---|---|---|---|---|---|---|---|---|
| 54 | X422605 | Aislante cubierta barlan 575x530x5 | | - | - | - | - | 2 | | | | | |
| 55 | X156147 | Cubrebulbo | | 1 | - | 1 | - | - | | | | | |
| 56 | Q012033 | Tornillo exagonal M-5x20 | | 1 | 1 | 1 | 1 | 1 | | | | | Amarre bulbo |
| 57 | Q012032 | Tornillo exagonal M-5x15 | | 1 | 1 | 1 | 1 | 1 | | | | | Amarre bulbo |
| 58 | Q262040 | Arandela muelle A-6 | | 4 | - | 4 | - | - | | | | | |
| 59 | Q012042 | Tornillo exagonal M-6x15 | | 4 | - | 4 | - | - | | | | | |

| MOD. | SARTENES BASCULANTES GAMA 900 | ZONA | VARIOS ( SARTENES DE GAS ) | PLANO | |
|---|---|---|---|---|---|

| ITEM | CODIGO | DENOMINACION | TEXTO | SBG9-10 | SBG9-10 M | SBG9-15 I M | | | | | | NOTAS |
|---|---|---|---|---|---|---|---|---|---|---|---|---|
| | X156511 | Folleto de instrucciones | | 1 | 1 | 1 | | | | | | |
| | X153022 | Esquema electrico adhesivo | | 1 | - | - | | | | | | Plano HC-75428 |
| | X343023 | Esquema electrico adhesivo | | - | 1 | 1 | | | | | | Plano HC-75426 |
| | X153024 | Esquema electrico de montaje | | 1 | 1 | 1 | | | | | | Plano HC-75722 |
| | X153021 | Instalacion electrica | | 1 | 1 | 1 | | | | | | |
| | U323007 | Cable encendedor a bujia | | 1 | 1 | 1 | | | | | | |
| | U333003 | Cable masa a encendedor | | 1 | 1 | 1 | | | | | | |
| | X163002 | Cable bujia | | 1 | 1 | 1 | | | | | | |
| | X283000 | Cableado motorreductor elevacion | | - | 1 | 1 | | | | | | |

| MOD. | SARTENES BASCULANTES GAMA 900 | ZONA | PIEZAS ESPECIFICAS PARA LOS DISTINTOS GASES | PLANO | C-1201 |
|---|---|---|---|---|---|

| ITEM | CODIGO | DENOMINACION | TEXTO | SBG9-10 | SBG9-15 | | | | | | | | NOTAS |
|---|---|---|---|---|---|---|---|---|---|---|---|---|---|
| | | | | | | | | | | | | | |
| | | **BUTANO-PROPANO** | | | | | | | | | | | |
| 6 | U052401 | Tobera quemador Ø1,45 | | 2 | 3 | | | | | | | | |
| 35 | U442138 | Inyector piloto Ø0,25 | | 1 | 1 | | | | | | | | |
| | | | | | | | | | | | | | |
| | | | | | | | | | | | | | |
| | | | | | | | | | | | | | |
| | | | | | | | | | | | | | |
| | | | | | | | | | | | | | |
| | | | | | | | | | | | | | |
| | | **GAS NATURAL** | | | | | | | | | | | |
| 6 | U262400 | Tobera quemador Ø2,15 | | 2 | 3 | | | | | | | | |
| 35 | U442137 | Inyector piloto Ø0,40 | | 1 | 1 | | | | | | | | |
| | | | | | | | | | | | | | |
| | | | | | | | | | | | | | |
| | | | | | | | | | | | | | |
| | | | | | | | | | | | | | |
| | | | | | | | | | | | | | |
| | | | | | | | | | | | | | |
| | | | | | | | | | | | | | |
| | | **GAS VILLA** | | | | | | | | | | | |
| 6 | X102403 | Tobera quemador Ø4,58 | | 2 | 3 | | | | | | | | |
| 35 | U442138 | Inyector piloto Ø0,25 | | 1 | 1 | | | | | | | | REGULAR |
| | | | | | | | | | | | | | |
| | | | | | | | | | | | | | |
| | | | | | | | | | | | | | |
| | | | | | | | | | | | | | |
| | | | | | | | | | | | | | |
| | | | | | | | | | | | | | |

| MOD. | SARTENES BASCULANTES GAMA 900 | | ZONA | VARIOS ( SARTENES ELECTRICAS ) | | | | | | | | | PLANO | |
|---|---|---|---|---|---|---|---|---|---|---|---|---|---|---|
| ITEM | CODIGO | DENOMINACION | TEXTO | SBE9-10 | SBE9-10 M | SBE9-15 I M | | | | | | | | NOTAS |
| | X146511 | Folleto de instrucciones | | 1 | 1 | 1 | | | | | | | | |
| | X143006 | Esquema electrico adhesivo | | 1 | - | - | | | | | | | | Plano HC-75709 |
| | X403002 | Esquema electrico adhesivo | | - | 1 | 1 | | | | | | | | Plano HC-75708 |
| | X143005 | Esquema electrico de montaje | | 1 | 1 | 1 | | | | | | | | Plano HC-75713 |
| | X143015 | Instalacion electrica | | 1 | 1 | 1 | | | | | | | | |
| | X143004 | Cableado resistencias 10 | | 1 | 1 | - | | | | | | | | |
| | X423004 | Cableado resistencias 15 | | - | - | 1 | | | | | | | | |
| | X143016 | Cableado regleta a contactores 10 | | 2 | 2 | - | | | | | | | | |
| | X423005 | Cableado regleta a contactores 15 | | - | - | 2 | | | | | | | | |
| | X283000 | Cableado motorreductor elevacion | | - | 1 | 1 | | | | | | | | |

# SBG9-10,SBG-710

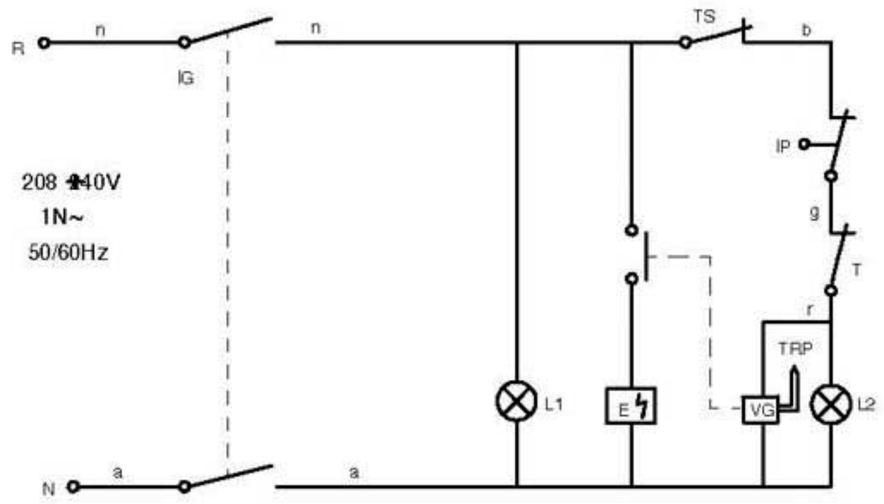


| | | | | |
|---|---|---|---|---|
| n: negro | n: noir | n: black | n: shwarz | n: nero |
| r: rojo | r: rouge | r: red | r: rot | r: rosso |
| b: blanco | b: blanc | b: white | b: weiss | b: bianco |
| g: gris | g: gris | g: grey | g: grau | g: grigio |
| a: azul | a: bleu | a: blue | a: blau | a: azzurro |

| | | | | |
|---|---|---|---|---|
| E: Encendedor | E: Allumage | E: Igniter | E: Start | E: Ignitore |
| IG: Interruptor general | IG: Interrupteur général | IG: Main switch | IG: Hauptschalter | IG: Interruttore generale |
| IP: Micro seguridad | Ip: Micro sécurité | IP: Security switch | IP: Mikro-Sicherheitsschalter | IP: Micro sicurezza |
| L1: Lampara marcha | L1: Veilleuse mise en route | L1: On light | L1: Funktionsleuchte | L1: Lampada funzionamento |
| L2: Lampara calentamiento | L2: Veilleuse chauffage | L2: Heating light | L2: Erwìrmungsleuchte | L2: Lampada riscaldamento |
| T: Termostato | T: Thermostat | T: Thermostat | T: Termostat | T: Termostato |
| TS: Termostato seguridad | TS: Thermostat sécurité | TS: Security thermostat | TS: Sicherheitsthermostat | TS: Termostato di sicurezza |
| TRP:Termopar | TRP:Termocouple | TRP:Thermo couple | TRP:Termometer | TRP:Coppia termoelettrica |
| VG: Válvula gas | VG:Valve gaz | VG:Gas valve | VG: Gasventil | VG: Válvola del gas |

X-153022

| | | | | | | |
|---|---|---|---|---|---|---|
| | Esquema teórico | | | X-153022 | | |
| Nº | Pieza | Cant. | Material | Nº Clasificacion | Acabado | |
| Nº | Modificacion | | Propuesta de | Fecha | Tolerancias generales | |
| | | | | | <5± | 50–100± |
| | | | | | 5–25± | >100± |
| | | | | | 25–50± | ∝± |
| | | | | | | |

| | Firma | Fecha |
|---|---|---|
| Dibujado | KONTXI | 10/1/2001 |
| Proyectado | | |
| Comprobado | | |

FAGOR

Fagor Industrial,Koop.Elk, Mugatua

Mecanizado superficial

Escala

SARTEN BASCULANTE

Plano numero HC-75428

Sustituye al Nº

Sustituido por

Plano hau ez daiteke erabili ez berriztagure baimenik gabe

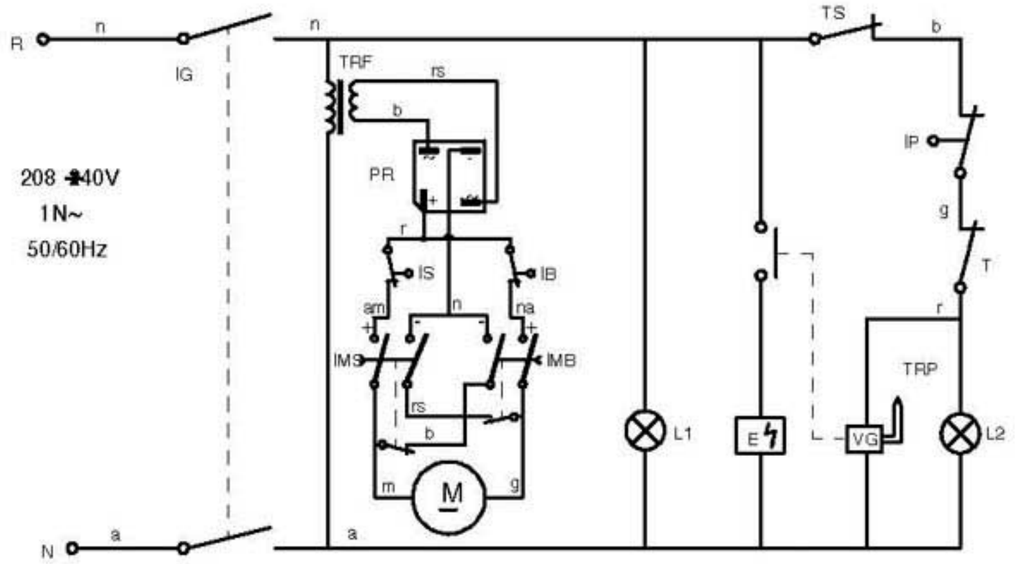


## SBG9-10M, SBG9-15

| | | | | |
|---|---|---|---|---|
| a: azul | a: bleu | a: blue | a: blow | a: azzurra |
| m: marron | m: marrron | m: brown | m: braun | m: marrone |
| n: negro | n: noir | n: black | n: shwarz | n: nero |
| r: rojo | r: rouge | r: red | r: rot | r: rosso |
| b: blanco | b: blanc | b: white | b: weiss | b: bianco |
| g: gris | g: gris | g: grey | g: grau | g: grigio |
| rs: rosa | rs: rose | rs: pink | rs: rosa | rs: rosa |
| am: amarillo | am: jaune | am: yellow | am: gelb | am: giallo |
| na: naranja | na: orange | na: orange | na: orange | na: arancione |
| ve: verde | ve: vert | ve: green | ve: grün | ve: verde |

| | | | | |
|---|---|---|---|---|
| E: Encendedor | E: Allumage | E: Igniter | E: Start | E: Ignitore |
| VG: Válvula gas | VG: Valve gaz | VG: Gas valve | VG: Gasventil | VG: Valvola del gas |
| IB: Micro tope bajada | IB: Micro bride descente | IB: Descént tops witch | IB: Mikro-Schalter unten | IB: Micro arresto discesa |
| IG: Interruptor general | IG: Interrupteur général | IG: Main switch | IG: Hauptschalter | IG: Interruttore generale |
| IMB:Pulsador bajada | IMB:Commande de baisse | IMB:Descent switch | IMB:Kippschalter unten | IMB:Pulsante discesa |
| IMS:Pulsador subida | IMS:Commande de montée | IMS:Elevation switch | IMS:Kippschalter oben | IMS:Pulsante salita |
| IP: Micro seguridad | Ip: Micro sécurité | IP: Security switch | IP: Mikro-Sicherheitsschalter | IP: Micro sicurezza |
| IS: Micro tope subida | Is: Micro bride montée | IS: Elevating top switch | IS: Mikro-Schalter oben | IS: Micro arresto salita |
| L1: Lámpara marcha | L1: Veilleuse mise en route | L1: On light | L1: Funktionsleuchte | L1: Lampada funzionamento |
| L2: Lámpara calentamiento | L2: Veilleuse chauffage | L2: Heating light | L2: Erwärmungsleuchte | L2: Lampada riscaldamento |
| M: Motor | M: Moteur | M: Motor | M: Motor | M: Motore |
| PR: Puente rectificador | PR: Pont redificateur | PR: Rectifier bridge | PR: Richtleiterüberbrückung | PR: Ponte rettificatore |
| T: Termostato | T: Thermostat | T: Thermostat | T: Termostat | T: Termostato |
| TRF:Transformador | TRF:Transformateur | TRF:Transformer | TRF:Transformator | TRF:Transformatore |
| TS: Termostato seguridad | TS: Thermostat sécurité | TS: Security thermostat | TS: Sicherheitsthermostat | TS: Termostato di sicurezza |
| TRP:Termopar | TRP:Termocouple | TRP:Thermo couple | TRP:Termometer | TRP:Coppia termoelettrica |

X-343023

| | | | | | | |
|---|---|---|---|---|---|---|
| | Esquema teórico | | | X-343023 | | |
| Nº | Pieza | Cant. | Material | Nº Clasificacion | Acabado | |
| Nº | Modificacion | | Propuesta de | Fecha | Tolerancias generales | |
| | | | | | <5± : | 50–100± : |
| | | | | | 5–25± : | >100± : |
| | | | | | 25–50± : | OX± : |

| | Firma | Fecha |
|---|---|---|
| Dibujado | KONTXI | 10/1/2001 |
| Proyectado | | |
| Comprobado | | |

FAGOR

Fagor Industrial,Koop.Elk, Mugatua

Mecanizado superficial

Escala

# SARTEN BASCULANTE

Plano numero HC-75426

Sustituye al Nº

Sustituido por

Plano hau ez da fotokopiatu edo bestelako bitarteko gisa baimenik gabe

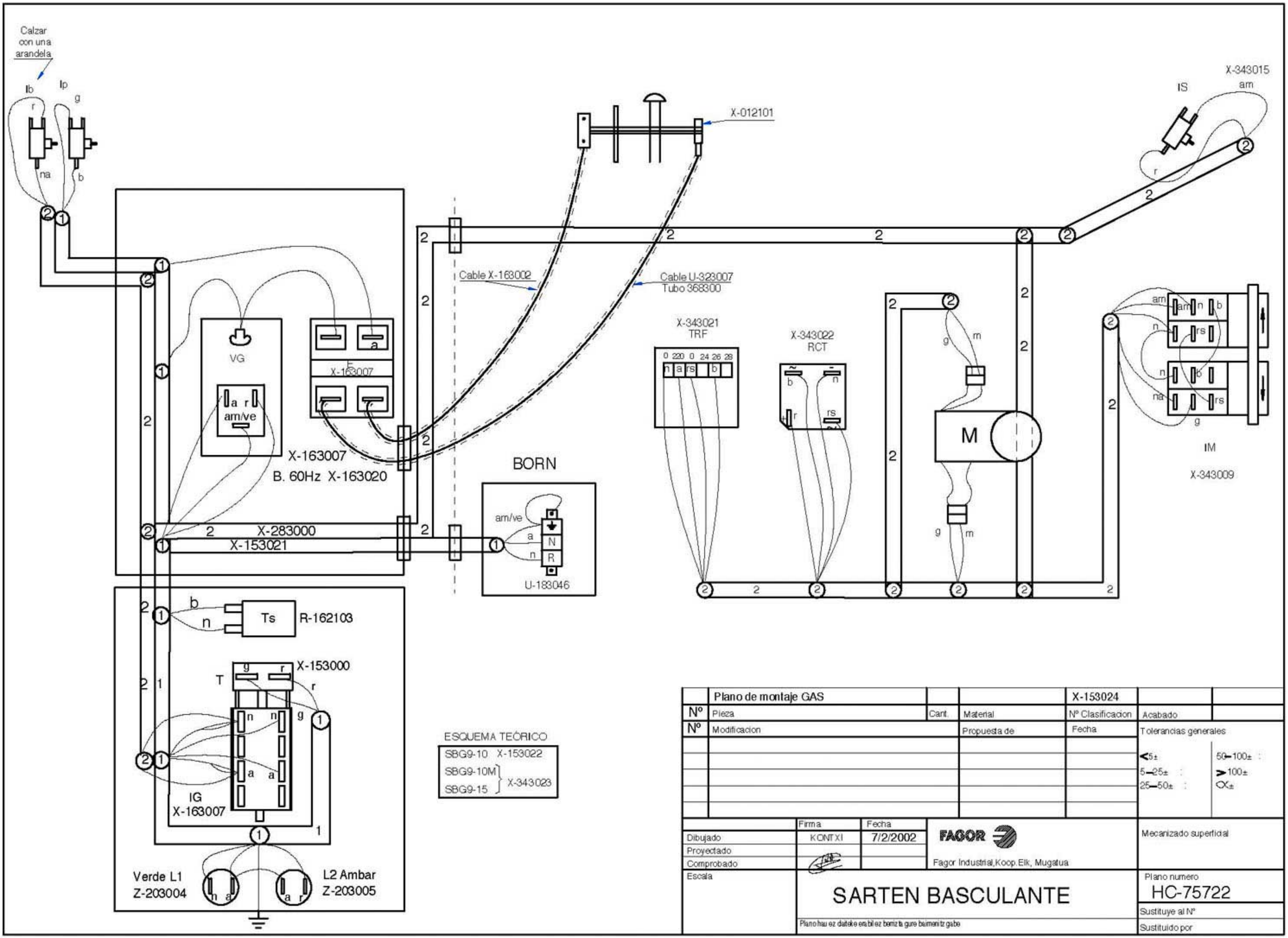


| | | | | | | |
|---|---|---|---|---|---|---|
| | Plano de montaje GAS | | | X-153024 | | |
| Nº | Pieza | Cant. | Material | Nº Clasificacion | Acabado | |
| Nº | Modificacion | | Propuesta de | Fecha | Tolerancias generales | |
| | | | | | <5± | 50–100± : |
| | | | | | 5–25± : | >100± |
| | | | | | 25–50± : | <x± |

| | Firma | Fecha |
|---|---|---|
| Dibujado | KONTXI | 7/2/2002 |
| Proyectado | | |
| Comprobado | | |
| Escala | | |

FAGOR

Fagor Industrial,Koop.Elk, Mugatua

Mecanizado superficial

# SARTEN BASCULANTE

Plano hau ez daiteke erabil ez berrizta gure baimenitz gabe

Plano numero
HC-75722

Sustituye al Nº

Sustituido por

# SBE9-10,SBE-710

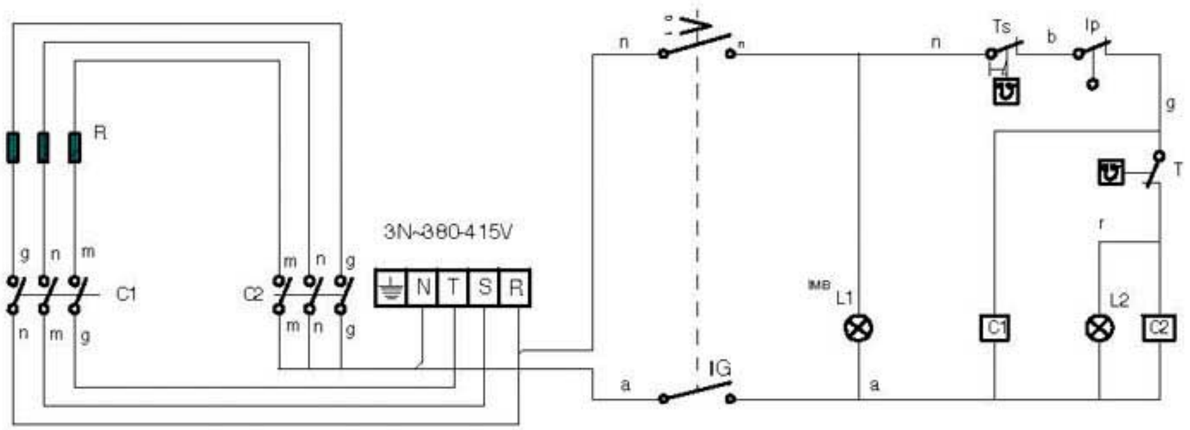


| | | | | |
|---|---|---|---|---|
| a: azul | a: bleu | a: blue | a: blow | a: azzurra |
| m: marron | m: marron | m: brown | m: braun | m: marrone |
| n: negro | n: noir | n: black | n: shwarz | n: nero |
| r: rojo | r: rouge | r: red | r: rot | r: rosso |
| b: blanco | b: blanc | b: white | b: weiss | b: bianco |
| g: gris | g: gris | g: grey | g: grau | g: grigio |
| rs: rosa | rs: rose | rs: pink | rs: rosa | rs: rosa |
| am: amarillo | am: jaune | am: yellow | am: gelb | am: giallo |
| na: naranja | na: orange | na: orange | na: orange | na: arancione |
| ve: verde | ve: vert | ve: green | ve: grün | ve: verde |







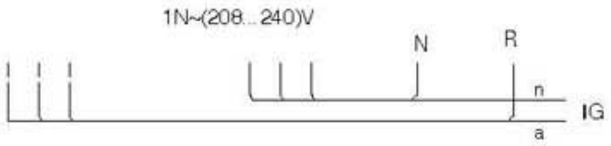


| | | | | |
|---|---|---|---|---|
| C1,C2: Contactor calentamiento | C1,C2: Contacteur chauffage | C1,C2: Heating relay | C1,C2: Aufheizkantaktor | C1,C2: Contactore riscaldamento |
| IG: Interruptor general | IG: Interrupteur général | IG: Main switch | IG: Hauptschalter | IG: Interruttore generale |
| IP: Micro seguridad | Ip: Micro sécurité | IP: Security switch | IP: Mikro-Sicherheitsschalter | IP: Micro sicurezza |
| L1: Lampara marcha | L1: Veilleuse mise en route | L1: On light | L1: Funktionsleuchte | L1: Lampada funzionamento |
| L2: Lampara calentamiento | L2: Veilleuse chauffage | L2: Heating light | L2: Erwärmungsleuchte | L2: Lampada riscaldamento |
| R: Resistencia calentamiento | R: Résistance chauffage | R: Heating element | R: Heizsystem | R: Resistenza riscaldamento |
| T: Termostato | T: Thermostat | T: Thermostat | T: Termostat | T: Termostato |
| TS: Termostato seguridad | TS: Thermostat sécurité | TS: Security thermostat | TS: Sicherheitsthermostat | TS: Termostato di sicurezza |

X-143006

| | | | | | | |
|---|---|---|---|---|---|---|
| | | | | | | |
| | | | | | | |
| | Esquema teórico SBE | | Poliester mate | X-143006 | | |
| Nº | Pieza | Cant. | Material | Nº Clasificacion | Acabado | |
| Nº | Modificacion | | Propuesta de | Fecha | Tolerancias generales | |
| | | | | | <5± | 50–100± : |
| | | | | | 5–25± : | >100± |
| | | | | | 25–50± : | ∝± |
| | | | | | | |
| | | | | | | |

| | Firma | Fecha | | |
|---|---|---|---|---|
| Dibujado | KONTXI | 9/5/2001 | FAGOR | Mecanizado superficial |
| Proyectado | | | | |
| Comprobado | | | Fagor Industrial,Koop.Elk, Mugalua | |
| Escala | SARTEN BASCULANTE | | | Plano numero HC-75709 |
| | Plano hau ez dateke erabilez berriztagure baimenik gabe | | | Sustituye al Nº |
| | | | | Sustituido por |

SBE9-10M SBE9-15

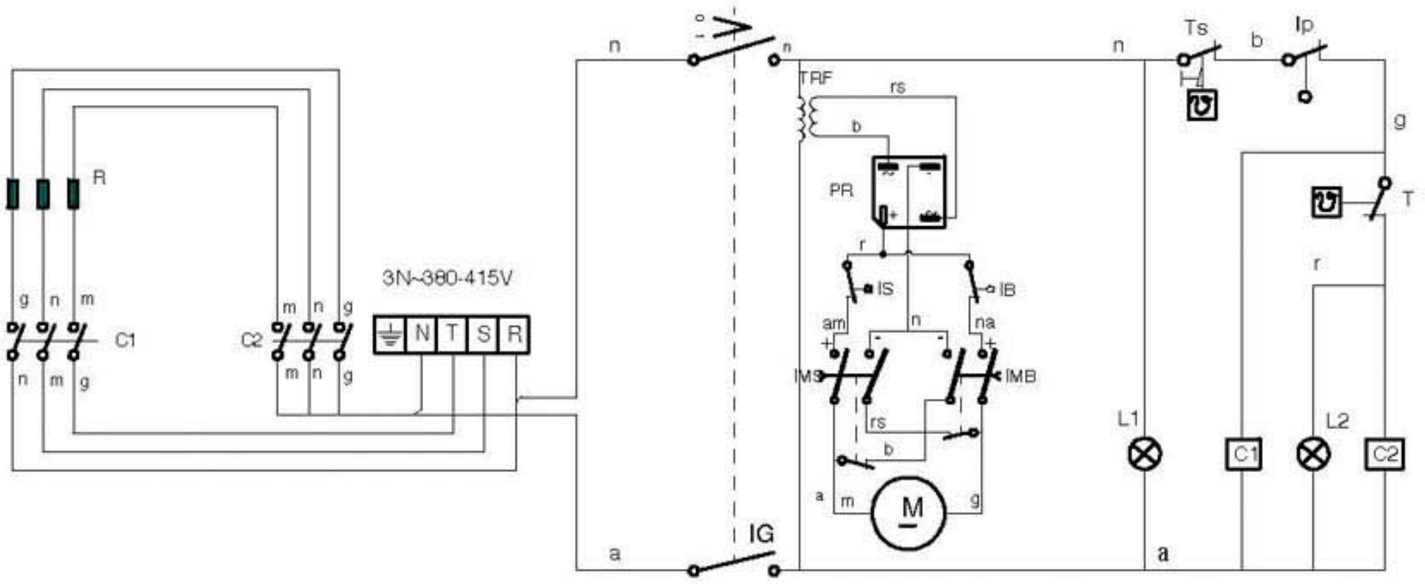


| | | | | |
|---|---|---|---|---|
| a: azul | a: bleu | a: blue | a: blow | a: azzurra |
| m: marron | m: marrron | m: brown | m: braun | m: marrone |
| n: negro | n: noir | n: black | n: shwarz | n: nero |
| r: rojo | r: rouge | r: red | r: rot | r: rosso |
| b: blanco | b: blanc | b: white | b: weiss | b: bianco |
| g: gris | g: gris | g: grey | g: grau | g: grigio |
| rs: rosa | rs: rose | rs: pink | rs: rosa | rs: rosa |
| am: amarillo | am: jaune | am: yellow | am: gelb | am: giallo |
| na: naranja | na: orange | na: orange | na: orange | na: arancione |
| ve: verde | ve: vert | ve: green | ve: grün | ve: verde |

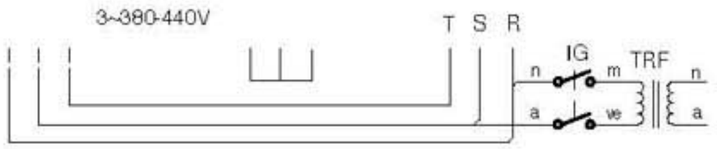


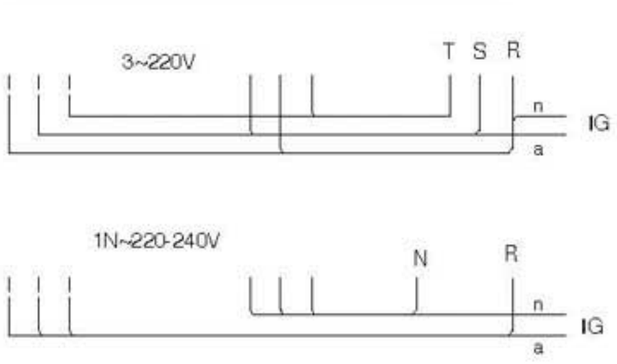


C1,C2: Contactor calentamiento
IB: Micro tope bajada
IG: Interruptor general
IMB:Pulsador bajada
IMS:Pulsador subida
IP: Micro seguridad
IS: Micro tope subida
L1: Lampara marcha
L2: Lampara calentamiento
M: Motor
PR: Puente rectificador
R: Resistencia calentamiento
T: Termostato
TRF:Transformador
TS: Termostato seguridad

C1,C2: Contacteur chauffage
IB: Micro bride descente
IG: Interrupteur général
IMB:Commande de baisse
IMS:Commande de montée
Ip: Micro sécurité
Is: Micro bride montée
L1: Veilleuse mise en route
L2: Veilleuse chauffage
M: Moteur
PR: Pont rectificateur
R: Résistance chauffage
T: Thermostat
TRF:Transformateur
TS: Thermostat sécurité

C1,C2: Heating relay
IB: Descènt tops witch
IG: Main switch
IMB:Descent switch
IMS:Elevation switch
IP: Security switch
IS: Elevating top switch
L1: On light
L2: Heating light
M: Motor
PR: Rectifier bridge
R: Heating element
T: Thermostat
TRF:Transformer
TS: Security thermostat

C1,C2: Aufheizkantaktor
IB: Mikro-Schalter unten
IG: Hauptschalter
IMB:Kippschalter unten
IMS:Kippschalter oben
IP: Mikro-Sicherheitsschalter
IS: Mikro-Schalter oben
L1: Funktionsleuchte
L2: Erwïrmungsleuchte
M: Motor
PR: Richtleiterüberbrückung
R: Heizsystem
T: Termostat
TRF:Transformator
TS: Sicherheitsthermostat

C1,C2: Contactore riscaldamento
IB: Micro arresto discesa
IG: Interruttore generale
IMB:Pulsante discesa
IMS:Pulsante salita
IP: Micro sicurezza
IS: Micro arresto salita
L1: Lampada funzionamento
L2: Lampada riscaldamento
M: Motore
PR: Ponte rettificatore
R: Resistenza riscaldamento
T: Termostato
TRF:Transformatore
TS: Termostato di sicurezza

X-403002

| | | | | | | |
|---|---|---|---|---|---|---|
| | Esquema teórico SBEM | | Poliester mate | X-403002 | | |
| Nº | Pieza | Cant. | Material | Nº Clasificacion | Acabado | |
| Nº | Modificacion | | Propuesta de | Fecha | Tolerancias generales | |
| | | | | | <5± : 5–25± : 25–50± : | 50–100± : >100± : ∝± |

| | Firma | Fecha | | |
|---|---|---|---|---|
| Dibujado | KONTXI | 9/5/2001 | FAGOR | Mecanizado superficial |
| Proyectado | | | | |
| Comprobado | | | Fagor Industrial,Koop.Elk, Mugalua | |
| Escala | SARTEN BASCULANTE | | | Plano numero HC-75708 |
| | Plano hau ez dateke erabilez bernizta gure baimenitz gabe | | | Sustituye al Nº |
| | | | | Sustituido por |

Calzar con una arandela

| Instalación | SBE x10 | SBE 915 |
|---|---|---|
| 1 | X-143015 | |
| 2 | X-283000 | |
| 3 | X-143016 | X-423005 |
| 4 | X-143004 | X-423004 |

Resistencias 230 V
SBE 910 6x2000 W
SBE 915 9x2000 W
X-143010

SBE 710 6x1500 W
X-273000

L=820

3 ~ 220V

1N ~ 240V

SBE X10 R-663031
SBE 915 X-183011

X-343021
TRF

X-343022
RCT

M

IM

X-343009

Ts R-162103

X-153000

IG
X-163007

Verde L1
Z-203004

L2 Ambar
Z-203005

| | Esquema de montaje electrico | | | X-143005 | | |
|---|---|---|---|---|---|---|
| Nº | Pieza | Cant. | Material | Nº Clasificacion | Acabado | |
| Nº | Modificacion | | Propuesta de | Fecha | Tolerancias generales | |
| | | | | | <5± | 50–100± : |
| | | | | | 5–25± : | >100± |
| | | | | | 25–50± : | ∝± |

| | Firma | Fecha |
|---|---|---|
| Dibujado | KONTXI | 18/01/2002 |
| Proyectado | | |
| Comprobado | | |
| Escala | | |

FAGOR

Fagor Industrial,Koop.Elk, Mugatua

Mecanizado superficial

# SARTEN BASCULANTE

Plano hau ez dateke eskubidez beretzta gure baimenitz gabe

Plano numero
HC-75713

Sustituye al Nº

Sustituido por