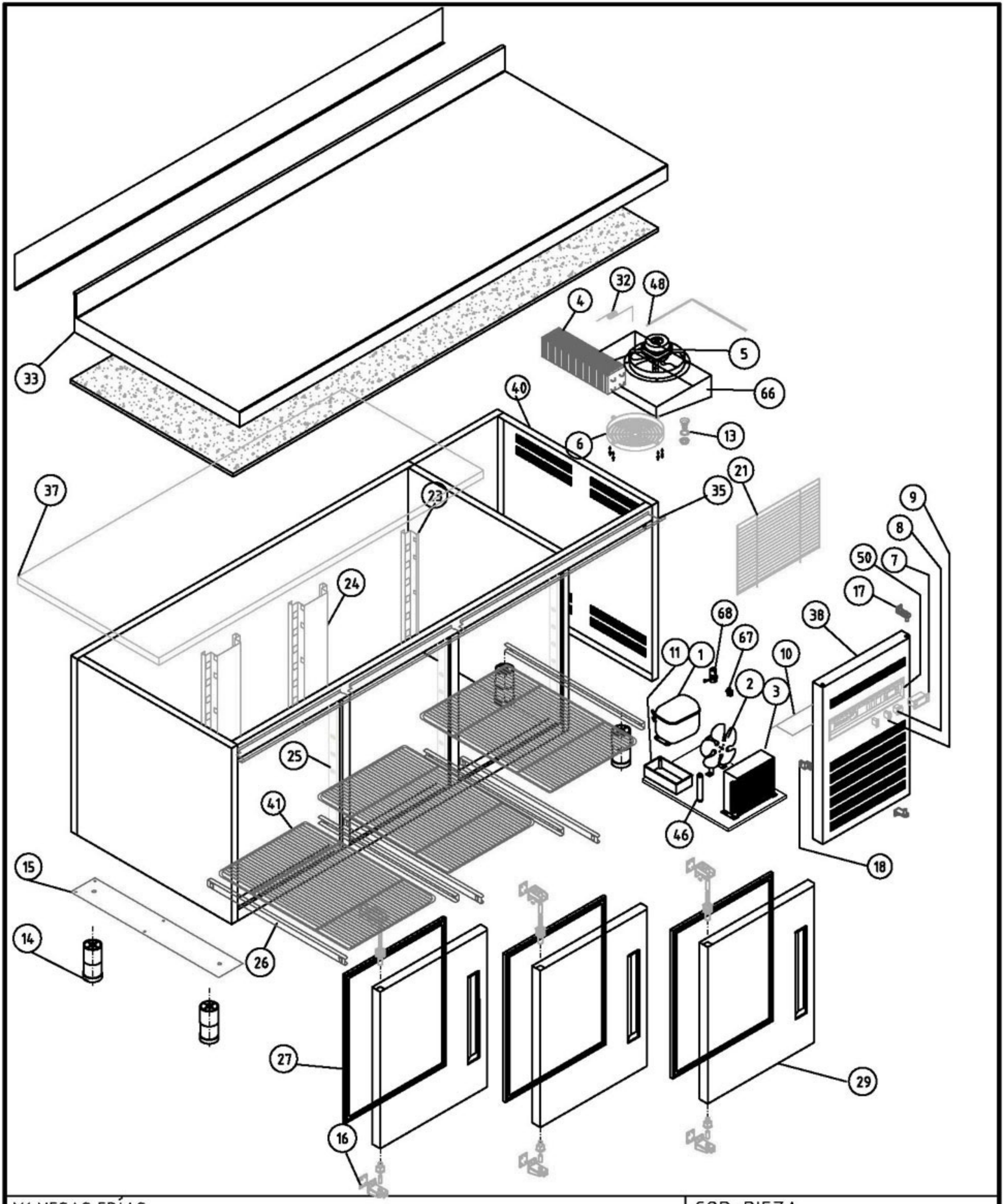


M1 MESAS FRÍAS

COD. PIEZA:

SUSTITUYE A: .

SUSTITUIDO POR: .

COTAS SIN TOLERANCIA **DIN 7168-f**

| | GRADO TOLERANCIA | FINO | MEDIO | GRUESO |
|---|---|---|---|---|
| ANGULAR | HASTA 10 mm | ±1° | | ±1° 30' |
| | MAS DE 10 A 50 mm | ±30' | | ±50' |
| | MAS DE 50 A 120 mm | ±20' | | ±25' |
| | MAS DE 120 A 400 mm | ±10' | | ±15' |
| | MAS DE 400 mm | ±5' | | ±10' |
| LINEAL | GRADO TOLERANCIA | FINO | MEDIO | GRUESO |
| | HASTA 3 mm | ±0,05 | ±0,10 | ±0,15 |
| | MAS DE 3 A 6 mm | ±0,05 | ±0,10 | ±0,20 |
| | MAS DE 6 A 30 mm | ±0,10 | ±0,20 | ±0,50 |
| | MAS DE 30 A 120 mm | ±0,15 | ±0,30 | ±0,80 |
| | MAS DE 120 A 400 mm | ±0,20 | ±0,50 | ±1,20 |
| | MAS DE 400 A 1000 mm | ±0,30 | ±0,80 | ±2,00 |
| | MAS DE 1000 A 2000 mm | ±0,50 | ±1,20 | ±3,00 |

Material: **MATERIAL ESPESOR**

Acabado: **ACABADO**

COMÚN A

| MODELO | Ud. | MODELO | Ud. | MODELO | Ud. | MODELO | Ud. | MODELO |
|---|---|---|---|---|---|---|---|---|
| MPP-202 | 1 | | | | | | | |
| | | | | | | | | |
| | | | | | | | | |

| | | |
|---|---|---|
| A4 | Nombre | Fecha |
| Dibujado | MJGG | 3-3-03 |
| Modificado | . | . |

FAGOR
FAGOFRI s.a.

Escala 1:22

# RECAMBIOS MPP-202

Código máquina: CODIGO

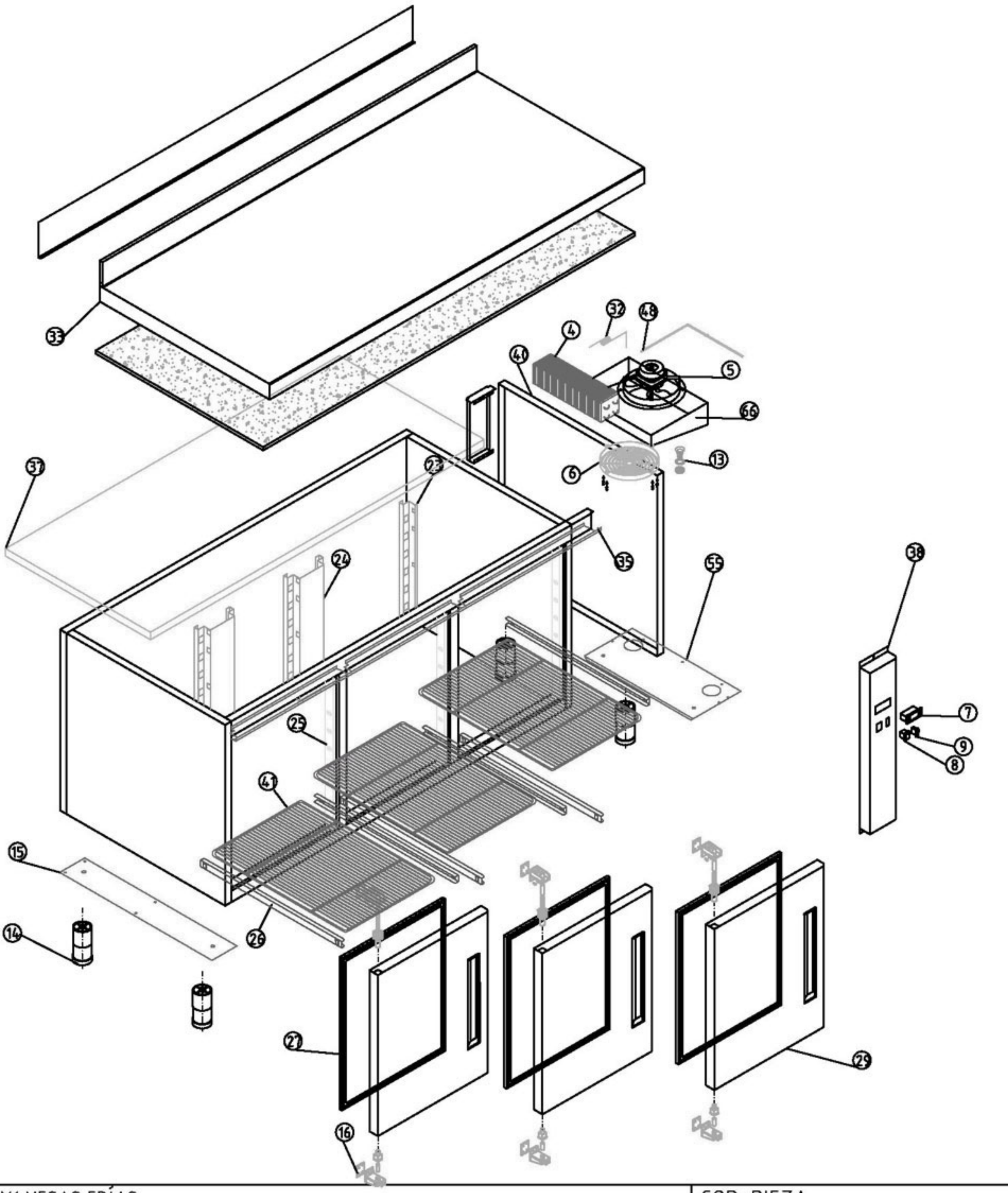


M1 MESAS FRÍAS

COD. PIEZA:

SUSTITUYE A: .

SUSTITUIDO POR: .

COTAS SIN TOLERANCIA **DIN 7168-f**

| | GRADO TOLERANCIA | FINO | MEDIO | GRUESO |
|---|---|---|---|---|
| ANGULAR | HASTA 10 mm | ±1° | | ±1° 30' |
| | MAS DE 10 A 50 mm | ±30' | | ±50' |
| | MAS DE 50 A 120 mm | ±20' | | ±25' |
| | MAS DE 120 A 400 mm | ±10' | | ±15' |
| | MAS DE 400 mm | ±5' | | ±10' |

| | GRADO TOLERANCIA | FINO | MEDIO | GRUESO |
|---|---|---|---|---|
| LINEAL | HASTA 3 mm | ±0,05 | ±0,10 | ±0,15 |
| | MAS DE 3 A 6 mm | ±0,05 | ±0,10 | ±0,20 |
| | MAS DE 6 A 30 mm | ±0,10 | ±0,20 | ±0,50 |
| | MAS DE 30 A 120 mm | ±0,15 | ±0,30 | ±0,80 |
| | MAS DE 120 A 400 mm | ±0,20 | ±0,50 | ±1,20 |
| | MAS DE 400 A 1000 mm | ±0,30 | ±0,80 | ±2,00 |
| | MAS DE 1000 A 2000 mm | ±0,50 | ±1,20 | ±3,00 |

Material:

Acabado:

COMÚN A

| MODELO | Ud. | MODELO | Ud. | MODELO | Ud. | MODELO | Ud. | MODELO |
|---|---|---|---|---|---|---|---|---|
| MPP-169-R | 1 | | | | | | | |
| | | | | | | | | |
| | | | | | | | | |

| | | |
|---|---|---|
| A4 | Nombre | Fecha |
| Dibujado | MJGG | 3-3-03 |
| Modificado | . | . |

FAGOR
FAGOFRI s.a.

Escala 1:22

# RECAMBIOS MPP-169 REMOTA

Código máquina:

CODIGO

# RECAMBIOS MESAS FRÍAS

revisión 01-03-2003

FAGOR

FAGOFRI S.A.

| Nº | CÓDIGO | DESCRIPCIÓN | MODELOS PASTELERAS | | | | | | | |
|---|---|---|---|---|---|---|---|---|---|---|
| | | | MPP-150 | MPP-202 | MPP-255 | MPP-307 | MPP-117-R | MPP-169-R | MPP-222-R | MPP-274-R |
| 1 | 6021010007 | COMPR.FR-8,5 - G R134A | | 1 | | | | | | |
| 1 | 6021010015 | COMPRESOR GP14 TG | | | 1 | 1 | | | | |
| 1 | 6021010004 | COMPR.FR-7,5-G R134A | 1 | | | | | | | |
| 2 | 6021050002 | VENTILADOR 10W PATA PALA 220V | 1 | 1 | 1 | 1 | | | | |
| 3 | 6029020003 | CONDENSADOR 9x3 FAGC0021 | | | 1 | 1 | | | | |
| 3 | 6029020002 | CONDENSADOR 9x2 | 1 | 1 | | | | | | |
| 4 | M129010004 | BAT.MFP-270 8T4R330A4SC/TU(PIN | | | 1 | 1 | | | | |
| 4 | M129010002 | BAT.MFP135 5T4R330A4SC/TUB(PIN | 1 | 1 | | | 1 | 1 | 1 | 1 |
| 5 | 6021050001 | VENTIL.EVAPOR.5W ARO/TIRO FORZ | 1 | 1 | 1 | 1 | 1 | 1 | 1 | 1 |
| 6 | 6003010035 | REJILLA PROTECCION VENTILADOR | 1 | 1 | 1 | 1 | 1 | 1 | 1 | 1 |
| 7 | 6021350015 | TERMOSTATO TERM.REFRIG ID 961F | 1 | 1 | 1 | 1 | 1 | 1 | 1 | 1 |
| 8 | 6021130001 | INTERRUPTOR BIPOL.AMB.ON/OFF | 1 | 1 | 1 | 1 | 1 | 1 | 1 | 1 |
| 9 | 6021130010 | PILOTO RECTAN.AMBAR SEÑAL LUM. | 1 | 1 | 1 | 1 | 1 | 1 | 1 | 1 |
| 10 | M109050157 | CHAPA PROT.MANDOS MESAS FRIAS | 1 | 1 | 1 | 1 | | | | |
| 11 | 6003010023 | BANDEJA EVAPORACION AUTOMÁTICA | 1 | 1 | 1 | 1 | | | | |
| 13 | 6003010034 | DESAGÜE SAN MIGUEL | 1 | 1 | 1 | 1 | 1 | 1 | 1 | 1 |
| 14 | 6007050015 | PATA REGUL. 50X95 BAJOS | 4 | 4 | 4 | 4 | 4 | 4 | 4 | 4 |
| 15 | M161250007 | BASE PATAS MPP 700X100 PINTADA | 1 | 1 | 1 | 1 | 1 | 1 | 1 | 1 |
| 16 | V169090001 | BISAGRA SISTEMA GIRO A IZDA | 2 | 3 | 4 | 5 | 2 | 3 | 4 | 5 |
| 17 | 6003010048 | SOPORTE PUERTA REJILLA | 2 | 2 | 2 | 2 | | | | |
| 18 | 6003010032 | ESCUADRA AMARRE REJILLA | 1 | 1 | 1 | 1 | | | | |
| 21 | 6003010181 | REJ.RESP.GRUPO 387X280POLICARB | 1 | 1 | 1 | 1 | | | | |
| 23 | M109050122 | CREMALL.LAT.POST.MFP DCHA. | 1 | 1 | 1 | 1 | 1 | 1 | 1 | 1 |
| 23 | M109050104 | CREMALL.LAT.POST.MFP IZDA. | 1 | 1 | 1 | 1 | 1 | 1 | 1 | 1 |
| 24 | M109050105 | CREMALLERA CENTRAL MFP | 1 | 2 | 3 | 4 | 1 | 2 | 3 | 4 |
| 25 | M109050156 | CREMALLERA MPP 577X70 | 4 | 6 | 8 | 10 | 4 | 6 | 8 | 10 |
| 26 | 6033050014 | GUÍA PASTELERA EN L 649 MM | 8 | 12 | 16 | 20 | 8 | 12 | 16 | 20 |
| 27 | 6045010009 | BURLETE 475X605 MSP | 2 | 3 | 4 | 5 | 2 | 3 | 4 | 5 |
| 29 | M169010010 | PUERTA MSP/MPP IZDA TIR.ABS | 2 | 3 | 4 | 5 | 2 | 3 | 4 | 5 |
| 32 | V107020005 | CAPILAR 1.25x2100 | | | 1 | 1 | | | | |
| 32 | M107020001 | CAPILAR 1x3300 | 1 | 1 | | | | | | |
| 33 | M181010034 | ENCIMERA MPP274 | | | | | | | | 1 |
| 33 | M181010033 | ENCIMERA MPP222 | | | | | | | 1 | |
| 33 | M181010032 | ENCIMERA MPP169 | | | | | | 1 | | |
| 33 | M181010031 | ENCIMERA MPP117 | | | | | 1 | | | |
| 33 | M181010027 | ENCIMERA MPP150 | 1 | | | | | | | |
| 33 | M181010029 | ENCIMERA MPP250 | | | 1 | | | | | |
| 33 | M181010030 | ENCIMERA MPP300 | | | | 1 | | | | |
| 33 | M181010028 | ENCIMERA MPP-200 | | 1 | | | | | | |
| 35 | M109250026 | PROTECT. ENCIM. 150 | 1 | | | | 1 | | | |
| 35 | M109250027 | PROTECT. ENCIM. 200 | | 1 | | | | 1 | 1 | 1 |
| 35 | M109250028 | PROTECT. ENCIM. 250 | | | 1 | 1 | | | | |
| 35 | M109250030 | PROTECT. ENCIM. SUPLE. 300 | | | | 1 | | | | |
| 36 | 6001050018 | AGLOM.1490X770X13 ENC. MPP-150 | 1 | | | | 1 | | | |
| 36 | 6001050024 | AGLOM.2540X770X13 ENC. MPP-255 | | | 1 | 1 | | | | |
| 36 | 6001050023 | AGLOM.2010X770X13 ENC. MPP-202 | | 1 | | | | 1 | 1 | 1 |
| 37 | 6013050021 | PL.POLIEST.1010X666X30 TIPO IV | 1 | | | | 1 | | | |
| 37 | 6013050022 | PL.POLIEST.1535X666X30 TIPO IV | | 1 | 1 | 1 | | 1 | 1 | 1 |
| 38 | M109010334 | REJILLA CUADRO ABS GRIS MSP | 1 | 1 | 1 | 1 | | | | |
| 38 | M109010335 | CUADRO DE MANDOS MSN-R R7 | | | | | 1 | 1 | 1 | 1 |
| 40 | M109010194 | COST EXT LAD GRUP R MPP-R | | | | | 1 | 1 | 1 | 1 |
| 40 | M109010192 | COST EXT LADO GRUPO MPP | 1 | 1 | 1 | 1 | | | | |
| 41 | 6027010005 | PARRILLA PASTELERÍA 600X400 | 2 | 3 | 4 | 5 | 2 | 3 | 4 | 5 |
| 46 | 6047010003 | FILTRO DESHIDRAT.40GR 1/4X1/4 | 1 | 1 | 1 | 1 | | | | |
| 48 | 6021350013 | SONDA TERMOST.REF NTC 15KOhm | 1 | 1 | 1 | 1 | 1 | 1 | 1 | 1 |
| 50 | 6003010105 | CUADRO ABS GRIS | 1 | 1 | 1 | 1 | | | | |
| 55 | 6037050004 | SOPORTE COST.RODA.MPPR 230X700 | | | | | 1 | 1 | 1 | 1 |
| 66 | 6003050001 | GAVETA TIRO FORZADO GASTRO | 1 | 1 | 1 | 1 | 1 | 1 | 1 | 1 |
| 67 | 6021010045 | RELE ARRANQUE COMPRESOR FR-7,5-G 6001 | 1 | | | | | | | |
| 67 | 6021010017 | RELE COMPRESOR GP-14TG RF 5127 | | | 1 | 1 | | | | |
| 67 | 6021010025 | RELE ARRANQUE COMPRESOR FR-8,5G | | 1 | | | | | | |
| 68 | 6021010041 | CONDENS.ARRANQ GL-TG 47 microF | | | 1 | 1 | | | | |
| 68 | 6021010037 | CONDENSADOR ARRANQUE FR 17U5015 80microF | 1 | 1 | | | | | | |

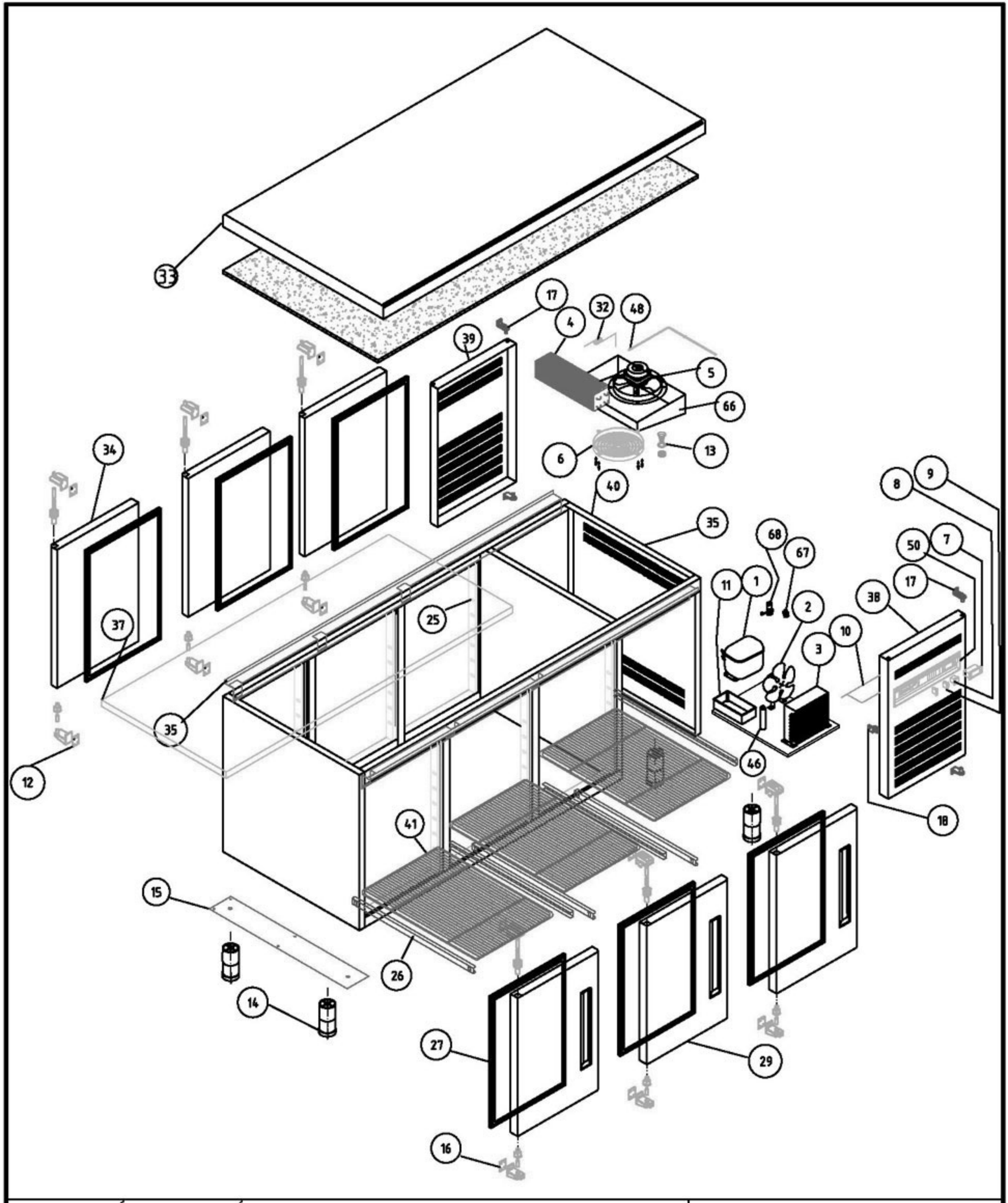


| | | | | |
|---|---|---|---|---|
| M1 MESAS FRÍAS PASTELERÍA | | | | COD. PIEZA: X |
| COTAS SIN TOLERANCIA **DIN 7168-f** | | | | Material: **MATERIAL ESPESOR** |
| | | | | Acabado: **ACABADO** |

| | GRADO TOLERANCIA | FINO | MEDIO | GRUESO |
|---|---|---|---|---|
| ANGULAR | HASTA 10 mm | ±1° | | ±1° 30' |
| | MAS DE 10 A 50 mm | ±30' | | ±50' |
| | MAS DE 50 A 120 mm | ±20' | | ±25' |
| | MAS DE 120 A 400 mm | ±10' | | ±15' |
| | MAS DE 400 mm | ±5' | | ±10' |

| | GRADO TOLERANCIA | FINO | MEDIO | GRUESO |
|---|---|---|---|---|
| LINEAL | HASTA 3 mm | ±0,05 | ±0,10 | ±0,15 |
| | MAS DE 3 A 6 mm | ±0,05 | ±0,10 | ±0,20 |
| | MAS DE 6 A 30 mm | ±0,10 | ±0,20 | ±0,50 |
| | MAS DE 30 A 120 mm | ±0,15 | ±0,30 | ±0,80 |
| | MAS DE 120 A 400 mm | ±0,20 | ±0,50 | ±1,20 |
| | MAS DE 400 A 1000 mm | ±0,30 | ±0,80 | ±2,00 |
| | MAS DE 1000 A 2000 mm | ±0,50 | ±1,20 | ±3,00 |

SUSTITUYE A: .

SUSTITUIDO POR: .

| COMÚN A | MODELO | Ud. | MODELO | Ud. | MODELO | Ud. | MODELO | Ud. | MODELO |
|---|---|---|---|---|---|---|---|---|---|
| | MPP-169-C | 1 | | | | | | | |
| | | | | | | | | | |
| | | | | | | | | | |

| | | | |
|---|---|---|---|
| A4 | Nombre | Fecha | FAGOR FAGOFRI s.a. |
| Dibujado | MJGG | . 14-3-03 | |
| Modificado | . | . | |
| Escala 1:25 | RECAMBIOS MPP-CENTRAL | | Código máquina: CODIGO |

# RECAMBIOS MESAS FRÍAS

revisión 01-03-2003

FAGOR

FAGOFRI S.A.

| Nº | CÓDIGO | DESCRIPCIÓN | MODELOS PASTELERAS | | | | | | | |
|---|---|---|---|---|---|---|---|---|---|---|
| | | | MPP-150-C | MPP-202-C | MPP-255-C | MPP-307-C | MPP-117-C | MPP-169-C | MPP-222-C | MPP-274-C |
| 1 | 6021010007 | COMPR.FR-8,5 - G R134A | | 1 | | | | | | |
| 1 | 6021010015 | COMPRESOR GP14 TG | | | 1 | 1 | | | | |
| 1 | 6021010004 | COMPR.FR-7,5-G R134A | 1 | | | | | | | |
| 2 | 6021050002 | VENTILADOR 10W PATA PALA 220V | 1 | 1 | 1 | 1 | | | | |
| 3 | 6029020003 | CONDENSADOR 9x3 FAGC0021 | | | 1 | 1 | | | | |
| 3 | 6029020002 | CONDENSADOR 9x2 | 1 | 1 | | | | | | |
| 4 | M129010004 | BAT.MFP-270 8T4R330A4SC/TU(PIN | | | 1 | 1 | | | | |
| 4 | M129010002 | BAT.MFP135 5T4R330A4SC/TUB(PIN | 1 | 1 | | | 1 | 1 | 1 | 1 |
| 5 | 6021050001 | VENTIL.EVAPOR.5W ARO/TIRO FORZ | 1 | 1 | 1 | 1 | 1 | 1 | 1 | 1 |
| 6 | 6003010035 | REJILLA PROTECCION VENTILADOR | 1 | 1 | 1 | 1 | 1 | 1 | 1 | 1 |
| 7 | 6021350015 | TERMOSTATO TERM.REFRIG ID 961F | 1 | 1 | 1 | 1 | 1 | 1 | 1 | 1 |
| 8 | 6021130001 | INTERRUPTOR BIPOL.AMB.ON/OFF | 1 | 1 | 1 | 1 | 1 | 1 | 1 | 1 |
| 9 | 6021130010 | PILOTO RECTAN.AMBAR SEÑAL LUM. | 1 | 1 | 1 | 1 | 1 | 1 | 1 | 1 |
| 10 | M109050157 | CHAPA PROT.MANDOS MESAS FRIAS | 1 | 1 | 1 | 1 | | | | |
| 11 | 6003010023 | BANDEJA EVAPORACION AUTOMÁTICA | 1 | 1 | 1 | 1 | | | | |
| 12 | V169090002 | BISAGRA SISTEMA GIRO A DCHA | 2 | 3 | 4 | 5 | 2 | 3 | 4 | 5 |
| 13 | 6003010034 | DESAGÜE SAN MIGUEL | 1 | 1 | 1 | 1 | 1 | 1 | 1 | 1 |
| 14 | 6007050015 | PATA REGUL. 50X95 BAJOS | 4 | 4 | 4 | 4 | 4 | 4 | 4 | 4 |
| 15 | M161250007 | BASE PATAS MPP 700X100 PINTADA | 1 | 1 | 1 | 1 | 1 | 1 | 1 | 1 |
| 16 | V169090001 | BISAGRA SISTEMA GIRO A IZDA | 2 | 3 | 4 | 5 | 2 | 3 | 4 | 5 |
| 17 | 6003010048 | SOPORTE PUERTA REJILLA | 4 | 4 | 4 | 4 | | | | |
| 18 | 6003010032 | ESCUADRA AMARRE REJILLA | 2 | 2 | 2 | 2 | | | | |
| 25 | M109050156 | CREMALLERA MPP 577X70 | 8 | 12 | 16 | 20 | 8 | 12 | 16 | 20 |
| 26 | 6033050013 | GUIA PAST.CENTRAL EN L 705mm | 8 | 12 | 16 | 20 | 8 | 12 | 16 | 20 |
| 27 | 6045010009 | BURLETE 475X605 MSP | 4 | 6 | 8 | 10 | 4 | 6 | 8 | 10 |
| 29 | M169010010 | PUERTA MSP/MPP IZDA TIR.ABS | 4 | 3 | 4 | 5 | 2 | 3 | 4 | 5 |
| 32 | V107020005 | CAPILAR 1.25x2100 | | | 1 | 1 | | | | |
| 32 | M107020001 | CAPILAR 1x3300 | 1 | 1 | | | | | | |
| 33 | M181010042 | ENCIMERA MPP274C | | | | | | | | 1 |
| 33 | M181010041 | ENCIMERA MPP222C | | | | | | | 1 | |
| 33 | M181010040 | ENCIMERA MPP169C | | | | | | 1 | | |
| 33 | M181010039 | ENCIMERA MPP117C | | | | | 1 | | | |
| 33 | M181010038 | ENCIMERA MPP300C | | | | 1 | | | | |
| 33 | M181010037 | ENCIMERA MPP250C | | | 1 | | | | | |
| 33 | M181010036 | ENCIMERA MPP200C | | 1 | | | | | | |
| 33 | M181010035 | ENCIMERA MPP150C | 1 | | | | | | | |
| 34 | M169010015 | PUERTA MFP DCHA TIR.ABS | 2 | 3 | 4 | 5 | 2 | 3 | 4 | 5 |
| 35 | M109250056 | PROTECT. ENCIM. CENT. 250 IZD | | | 1 | 1 | | | 1 | 1 |
| 35 | M109250053 | PROTECT. ENCIM. CENT. 250 | | | 1 | 1 | | | 1 | 1 |
| 35 | M109250055 | PROTECT. ENCIM. CENT. 200 IZD | | 1 | | | | 1 | | |
| 35 | M109250052 | PROTECT. ENCIM. CENT. 200 | | 1 | | 1 | | 1 | | 1 |
| 35 | M109250054 | PROTECT. ENCIM. CENT. 150 IZD | 1 | | | | 1 | | | |
| 35 | M109250051 | PROTECT. ENCIM. CENT. 150 | 1 | | | | 1 | | | |
| 36 | 6001050065 | AGLOM.1490x830x13 ENC.MPP-150C | 1 | | | | 1 | | | |
| 36 | 6001050024 | AGLOM.2540X770X13 ENC. MPP-255 | | | 1 | 1 | | | | |
| 36 | 6001050023 | AGLOM.2010X770X13 ENC. MPP-202 | | 1 | | | | 1 | 1 | 1 |
| 37 | 6013050021 | PL.POLIEST.1010X666X30 TIPO IV | 1 | | | | 1 | | | |
| 37 | 6013050022 | PL.POLIEST.1535X666X30 TIPO IV | | 1 | 1 | 1 | | 1 | 1 | 1 |
| 38 | M109010334 | REJILLA CUADRO ABS GRIS MSP | 1 | 1 | 1 | 1 | | | | |
| 38 | M109010335 | CUADRO DE MANDOS MSN-R R7 | | | | | 1 | 1 | 1 | 1 |
| 39 | M109010353 | REJILLA TRAS CUAD REMOT MCP | | | | | 1 | 1 | 1 | 1 |
| 39 | M109010342 | REJILLA CUADRO TRASERA MCP-R7 | 1 | 1 | 1 | 1 | | | | |
| 40 | M109010194 | COST EXT LAD GRUP R MPP-R | | | | | 1 | 1 | 1 | 1 |
| 40 | M109010192 | COST EXT LADO GRUPO MPP | 1 | 1 | 1 | 1 | | | | |
| 41 | 6027010005 | PARRILLA PASTELERÍA 600X400 | 2 | 3 | 4 | 5 | 2 | 3 | 4 | 5 |
| 46 | 6047010003 | FILTRO DESHIDRAT.40GR 1/4X1/4 | 1 | 1 | 1 | 1 | | | | |
| 48 | 6021350013 | SONDA TERMOST.REF NTC 15KOhm | 1 | 1 | 1 | 1 | 1 | 1 | 1 | 1 |
| 50 | 6003010105 | CUADRO ABS GRIS | 1 | 1 | 1 | 1 | | | | |
| 55 | 6037050004 | SOPORTE COST.RODA.MPPR 230X700 | | | | | 1 | 1 | 1 | 1 |
| 66 | 6003050001 | GAVETA TIRO FORZADO GASTRO | 1 | 1 | 1 | 1 | 1 | 1 | 1 | 1 |
| 67 | 6021010045 | RELE ARRANQUE COMPRESOR FR-7,5-G 6001 | 1 | | | | | | | |
| 67 | 6021010017 | RELE COMPRESOR GP-14TG RF 5127 | | | 1 | 1 | | | | |
| 67 | 6021010025 | RELE ARRANQUE COMPRESOR FR-8,5G | | 1 | | | | | | |
| 68 | 6021010041 | CONDENS.ARRANQ GL-TG 47 microF | | | 1 | 1 | | | | |
| 68 | 6021010037 | CONDENSADOR ARRANQUE FR 17U5015 80microF | 1 | 1 | | | | | | |