SIMAG

SC 70
SM 70
SCR 65
SCR 85

"J" SERIES

R 134 A VERSION

SPARE PARTS LIST
CATALOGO RICAMBI
CATALOGUE PIÈCES DÉTACHÉES
ERSATZTEILENKATALOG

REV. 11/2006

PAGE PAGINA PAGE SEITE	TABLE OF CONTENTS	INDICE	TABLE DES MATIÈRES	INHALTVERZEICHNIS
1	TABLE OF CONTENTS	INDICE	TABLE DES MATIÈRES	INHALTVERZEICHNIS
2-3	TABLE 1 - UNIT PANELS	TAVOLA 1 - ASSIEME MOBILE	TABLE 1 - ENS. CARROSSERIE	TAFEL 1 - MACHINE GEHÄUSE
4-5	TABLE 2 - WATER SYSTEM PUMP CIRCUIT	TAVOLA 2 - SISTEMA IDRAULICO CIRCUITO POMPA	TABLE 2 - SISTEME HYDRAULIQUE CIRCUIT POMPE	TAFEL 2 - WASSER SYSTEM KREISLAUFPUMP
6-7	TABLE 3 - WATER SYSTEM BIN - WATER INLET/OUTLET	TAVOLA 3 - SISTEMA IDRAULICO CELLA - ENTR. USC. ACQUA	TABLE 3 - SISTEME HYDRAULIQUE CABINE - ENTR. SORT. EAU	TAFEL 3 - WASSER SYSTEM ZELLE-WASSER EINGANG / AUSGANG
8-9	TABLE 4 - REFRIGERANT SYSTEM AIR COOLED	TVOLA 4 - SISTEMA REFRIGERANTE RAFFR. AD ARIA	TABLE 4 - CIRCUIT FRIGORIFIQUE REFROID. A AIR	TAFEL 4 - GEFRIERSYSTEM LUFTGEKÜHLT
10-11	TABLE 5 - REFRIGERANT SYSTEM WATER SYSTEM	TAVOLA 5 - SISTEMA REFRIGERANTE RAFFR. AD ACQUA	TABLE 5 - CIRCUIT FRIGORIFIQUE REFROID. A EAU	TAFEL 5 - GEFRIERSYSTEM WASSERGEKÜHL T
12	COMPRESSON AND ELECTRIC COMPONENT CHARTS	TABELLA COMPRESSORI E COMPONENTI ELETTRICI	LISTE DES COMPRESSEURS ET COMPOSANTS ELECTRIQUE	KOMPRESSOR UND ELEKTRISCHER TEILLISTE

SC 70 - SM 70 - SCR 65 - SCR 85

TAVOLA 1

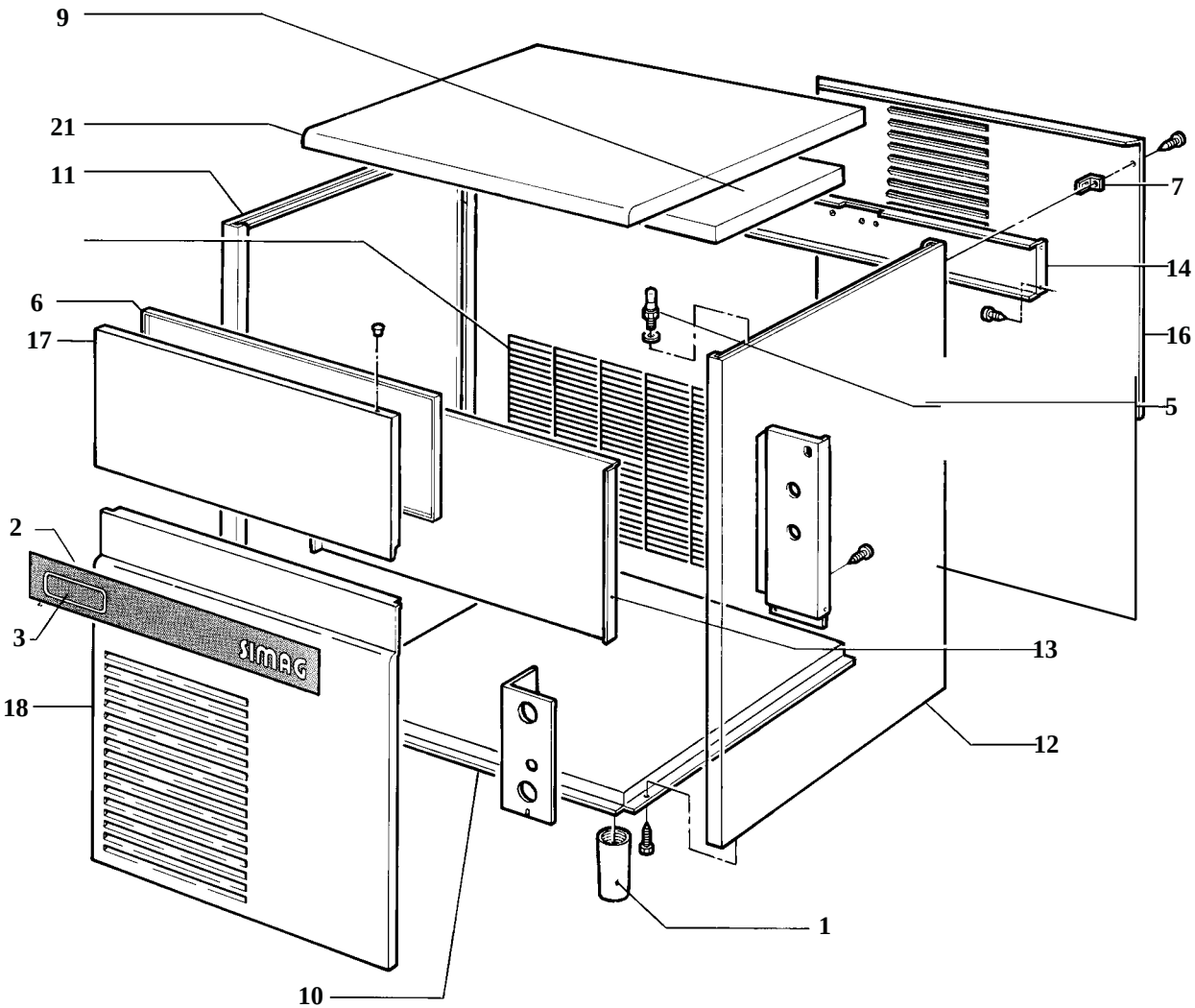

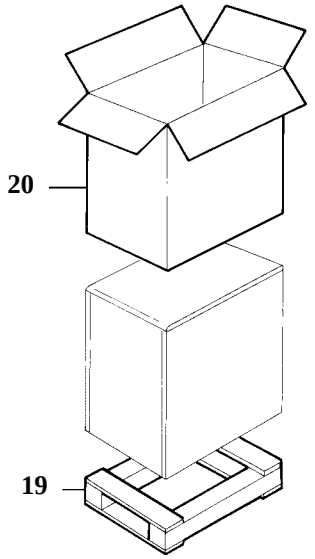

SC 70 - SM 70 - SCR 65 - SCR 85

TAVOLA 1

ITEM NO POS NO REP. NO REF. NO	PART. NO - CODICE REFERENCE - STUECK NR SC70 / SM70 / SCR65 / SCR85	DESCRIPTION	DESCRIZIONE	DESIGNATION	BESCHREIBUNG
1	660638 00	LEVELLING FOOT	PIEDE REGOLABILE	PIED RÉGLABE	GERUATEFUSS
2	650805 00	NAME PLATE	TARGA SERIGRAFATA	PLAQUETTE MARQUE	MARCHENSCHILD
3	650805 21 / 650805 26 / 650805 30 / 650805 31	MODEL LABEL	TARGA MODELLO	PLAQUETTE MODELE	MODELLBEZEICHNUNG
5	650790 00	STUD	PERNO	AXE	STIFT
6-17	060491 25	BIN DOOR	SPORTELLO	PORTE CABINE	SPEICHERTUER
7	650806 00	REAR STUD	PERNO POSTERIORE	AXE ARRIÉRE	TRÀGER - HINTEN
9	Z1AM088	TOP PANEL INSULATION	ISOLAMENTO PANNELLO SUPER.	PANNEAU ISOLANT	ISOLATION
10	781406 09	BASE ASSY	ASSIEME BASAMENTO	PLAQUE DE BASE	GRUNDPLATTE
11	721853 00	LEFT SIDE PANEL S.S.	PANNELLO SINISTRO INOX	JOUE GAUCHE ACIER INOX	LINKE GEHÄUSESEITE EDELSTAHL
12	721852 00	RIGHT SIDE PANEL S.S.	PANNELLO DESTRO INOX	JOUE DROITE ACIER INOX	RECHTEGEHÄUSESE EDELSTAHL
13	702330 00	FRONT SUPPORT	TRAVERSO ANTERIORE	TRAVERSE ANTERIEURE	VORDERE VERBINDUNGSSTREBE
14	704289 00	PUMP SUPPORT PANEL	TRAVERSO SUPPORTO POMPA	TRAVERSE SUPPORT POMPE	HALTERUNG PUMPE
16	702331 00	REAR PANEL	PANNELLO POSTERIORE	PANNEAU POSTERIEUR	HINTERE ABDECKUNG
18	721855 00	FRONT PANEL S.S.	PANNELLO ANTERIORE INOX	PANNEAU AVANT ACIER INOX	VORDERWAND EDELSTAHL
19	680427 00	PALLET	BASE IMBALLO	SOCLE	PALETTE
20	680149 04	CARTON	SCATOLA IMBALLO	CARTON	KARTON
21	781432 03	TOP PANEL S.S.	PANNELLO SUPERIORE INOX	ENS. COUVERCLE	DECKEL GESAMTHEIT

SC 70 - SM 70 - SCR 65 - SCR 85

TAVOLA 2

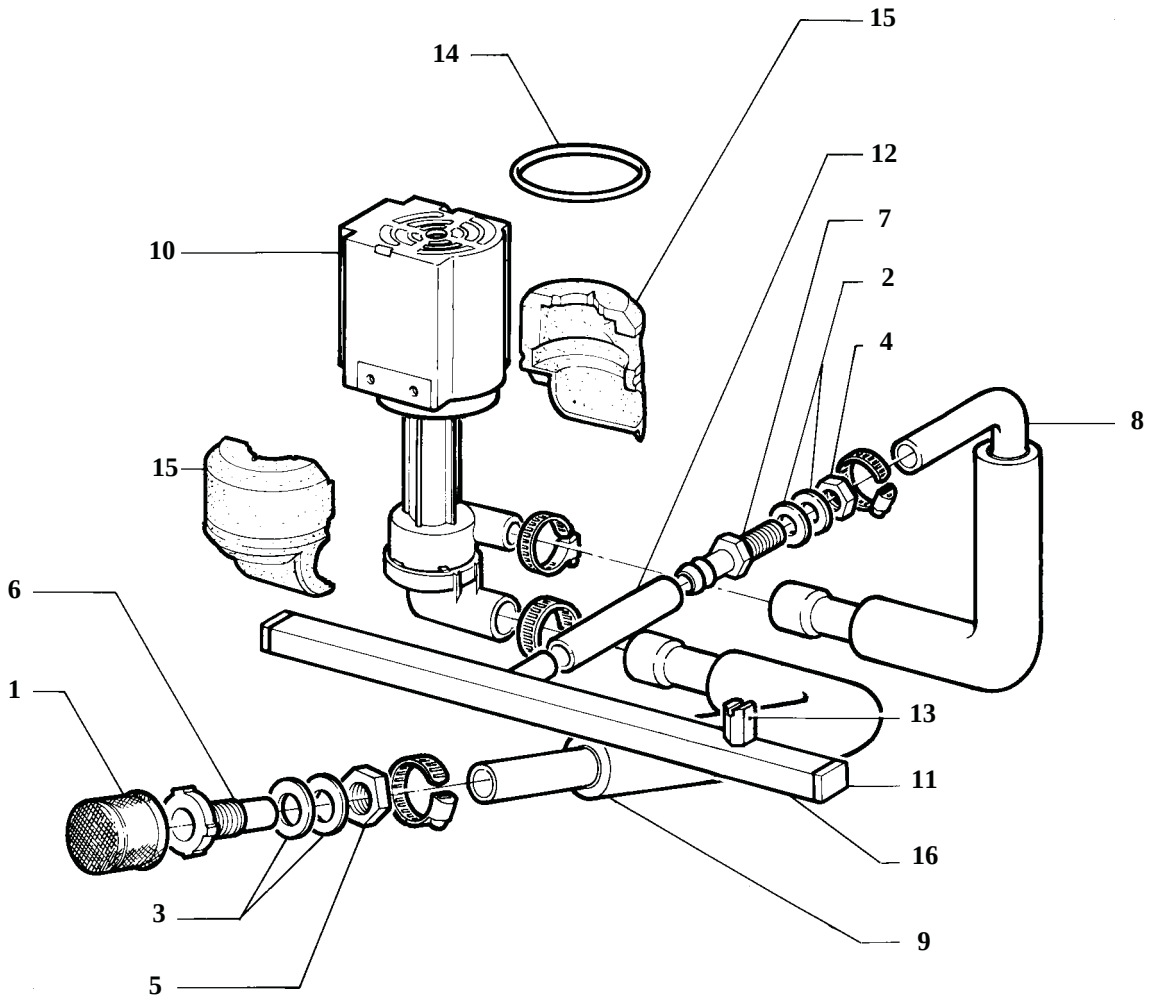

SC 70 - SM 70 - SCR 65 - SCR 85

TAVOLA 2

ITEM NO POS NO REP. NO REF. NO	PART. NO - CODICE REFERENCE - STUECK NR **SC70** / **SM70** / **SCR65** / **SCR85**	DESCRIPTION	DESCRIZIONE	DESIGNATION	BESCHREIBUNG
1	Z1AC012	PUMP FEEDING FILTER	FILTRO ASPIRAZIONE POMPA	FILTRE ASPIRATION POMPE	PUMPENANSAUGFILTER
2	Z1AC013	WASHER	RONDELLA	RONDELLE	UNTERLEGSCHEIBE
3	Z1AC014	WASHER	RONDELLA	RONDELLE	UNTERLEGSCHEIBE
4	Z1AC016	NUT	DADO	ECROU	MUTTER
5	Z1AC017	NUT	DADO	ECROU	MUTTER
6	Z1AC029	PUMP FEEDING PIPE FITTING	RACCORDO ASPIRAZIONE POMPA	RACCORD ASPIRATION POMPE	ANSAUGANSCHLUSSTUCK
7	Z1AC030	PUMP FEEDING PIPE FITTING	RACCORDO ASPIRAZIONE POMPA	RACCORD ASPIRATION POMPE	ANSAUGANSCHLUSSTUCK
8	Z1ID006	PUMP INLET WATER PIPE	TUBO MANDATA POMPA	TUYAU DE REFOULEMENT POMPE	PUMPENABFLUSSCHLAUCK
9	610189 01	PUMP FEEDING PIPE	TUBO ASPIRAZIONE POMPA	TUYAU D'ASPIRATION POMPE	PUMPENAGSAUGSCHLAUCH
10	620415 00	WATER PUMP ASSY	ASSIEME POMPA	ENSEMBLE POMPE A EAU	WASSERPUMPE
11	660557 00	PLUG MAINFOLD	TAPPO PER COLLETTORE	BOUCHON POUR COLLECTEUR	STOPFEN
12	281830 04	SPRAY BAR FEEDING PIPE	TUBO ALIMENTAZIONE COLLETTORE	TUYAU D'ALIMENTATION EAU	ANCHLUSSSCHLAUCH KOLLEKTOR
13	660558 00	SPRAY JET	SPRUZZATORI	GICLEURS	SPRÜHDÜSEN
14	Z1ID042	O-RING	ANELLO O.R.	JOINT TORIQUE	O-RING
15	Z1ID043	PUMP COVER INSULATION	ISOLAMENTO POMPA	COUPELLE ISOLANT POUR POMPE	PUMPENISOLATION
16	650665 06 / 650665 07 / 650665 15 / 650665 15	SPRAY BAR	COLLETTORE	COLLECTEUR	KOLLECTOR

SC 70 - SM 70 - SCR 65 - SCR 85

TAVOLA 3

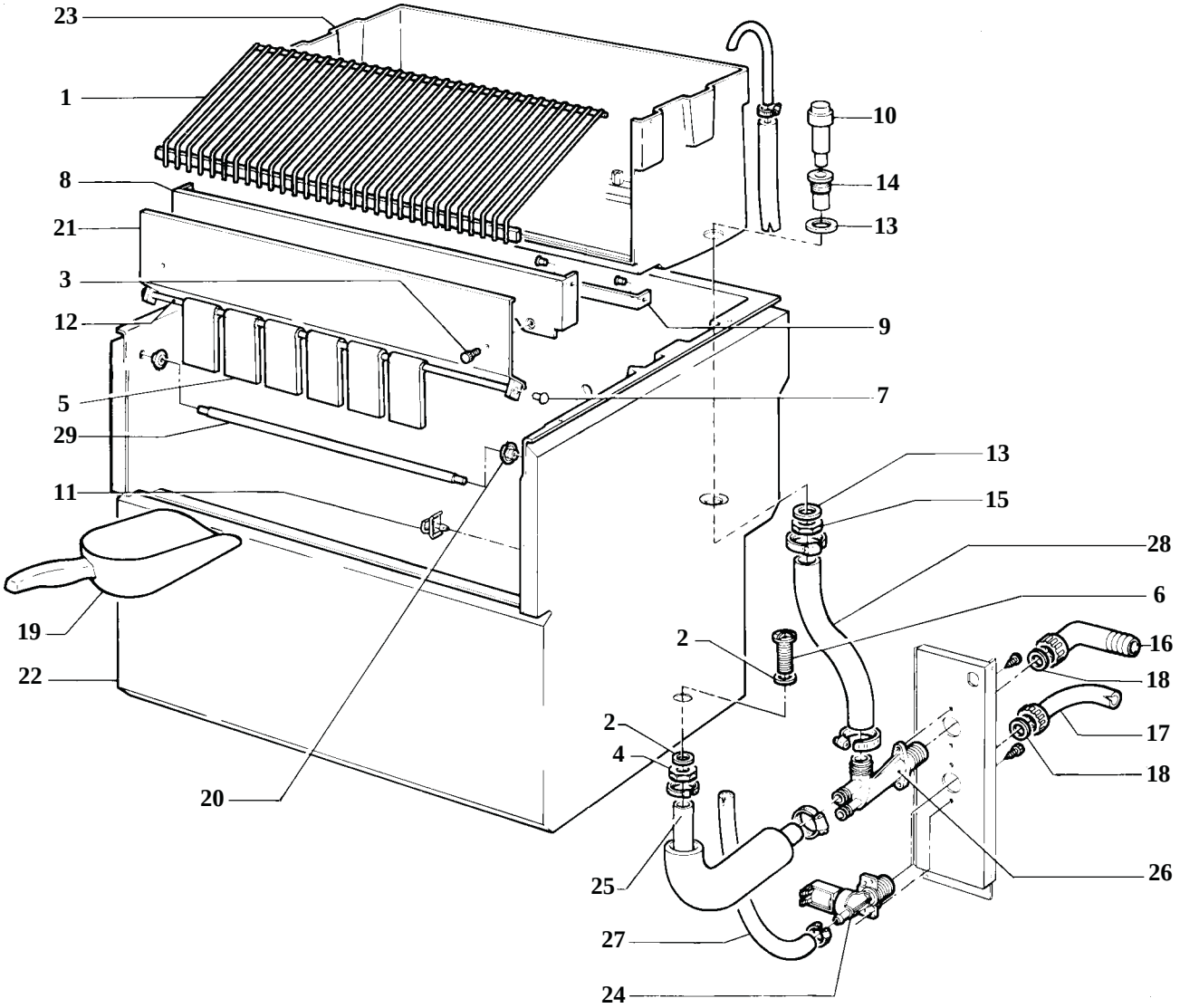

SC 70 - SM 70 - SCR 65 - SCR 85

TAVOLA 3

ITEM NO POS NO REP. NO REF. NO	PART. NO - CODICE REFERENCE - STUECK NR SC70	SM70	SCR65	SCR85	DESCRIPTION	DESCRIZIONE	DESIGNATION	BESCHREIBUNG
1	650690 00	Z1AC010	650690 01	650690 01	CUBE DEFLECTOR	GRIGLIA SCORRIMENTO CUBETTI	GRILLE GLISSEMENT GLACONS	ABGLEIT GRILL
2	Z1AC013				WASHER	RONDELLA	RONDELLE	UNTERLEGSCHEIBE
3	Z1AC015				KNURLED SCREW	VITE A TESTA GODRONATA	VIS MOLETEE	SCHRAUBE
4	Z1AC016				NUT	DADO	ECROU	MUTTER
5	660629 00				SPRAY CURTAIN FLAP	BANDIERINA	LAMELLE	ABDECKKLABBE
6	Z1AC028				BIN EXAUST PIPE FITTING	RACC. SCARICO CONTENITORE	RACCORD VIDANGE CONTENEUR	ANCHLUSSTUCH BEHALTER
7	640041 29				O-RING	GUARNIZIONE	JOINT TORIQUE	SIMMER RING
8	724325 00				EVAPORATOR SUPPORT	SUPPORTO EVAPORATORE	SUPPORT EVAPORATEUR	VERDAMPFERAUFLANGE
9	722146 01				BIN SUPPORT	SUPPORTO CELLA	SUPPORT CHAMBRE	HALTERUNG INNENBEHALTER
10	660601 00				OVERFLOW STAND PIPE	TUBO DI TROPPO PIENO	TROP PLEIN	UEBERLAUFROHR
11	470019 00							BEHALTERTHERMOSTATHALTER
12	734328 18				SPRAY CURTAIN BAR	TUBO OTTONE	TUBE EN LAITON	ABDECKKLAPPENHALTER
13	Z1AC056				WASHER	RONDELLA	RONDELLE	UNTERLEGSCHEIBE
14	Z1AC057				OVERFLOW STAND	RACC. SCARICO TROPPO PIENO	RACCORD ENCOULEM. TROP-PLEIN	UBERLAUFROHR
15	Z1AC058				NUT	DADO	ECROU	MUTTER
16	Z1AD011				ELBOW WITH RING NUT	CURVA CON GHIERA	COUDE AVEC BAGUE	KRUMMER
17	060513 00				WATER SUPPLY PIPE	TUBO ALIMENTAZIONE ACQUA	TUYAU D'ALIMENTATIO D'EAU	WASSERANSCHLUSSCHLAUCH
18	640076 13				GASKET	GUARNIZIONE	JOINT	DICHTUNG
19	650146 00				ICE SCOOP	SESSOLA	SASSE	EISSCHAUFEL
20	Z1AM025				RETAINER FOR DOOR BAR	PASSATUBO	PASSE-TUYAU	HALTERUNG
21	060524 09				CURAIN FLAP ASSY	ASSIEME TENDINA	ENS. LAMELLES COMPLET	JALOUISE KOMPLETT
22	060524 04				KIT BIN ASSY	KIT CELLA COMPLETA	KIT CHAMBRE COMPLETE	KIT ZELLE KOMPLETT
23	Z1CE032				INTERNAL BIN	CELLA INTERNA	CHAMBRE INTERIEUR	ZELLE INTERN
24	650105 52				WATER INLET VALVE	VALVOLA INGRESSO ACQUA	VANNE ARRIVEE EAU	ELECTROMAGNETVENTIL
25	610189 00				BIN EXAUST PIPE	TUBO SCARICO CONTENITORE	TUYAU VIDANGE CONTENEUR	BEHALTERAUSLAUFSCHLAUCH
26	Z1ID025				WATER EXAUST	SCARICO ACQUA	ECOULEMENT EAU	WASSERABLAUF
27	281900 01				PIPE	TUBO	TUBE	SCHLAUCH
28	Z1ID028				PIPE	TUBO	TUBE	SCHLAUCH
29	Z1AM018				DOOR SUPPORT BAR	ASTA SPORTELLO	TIGE PORTE	KLAPPENACHSE

SC 70 - SM 70 - SCR 65 - SCR 85

TAVOLA 4

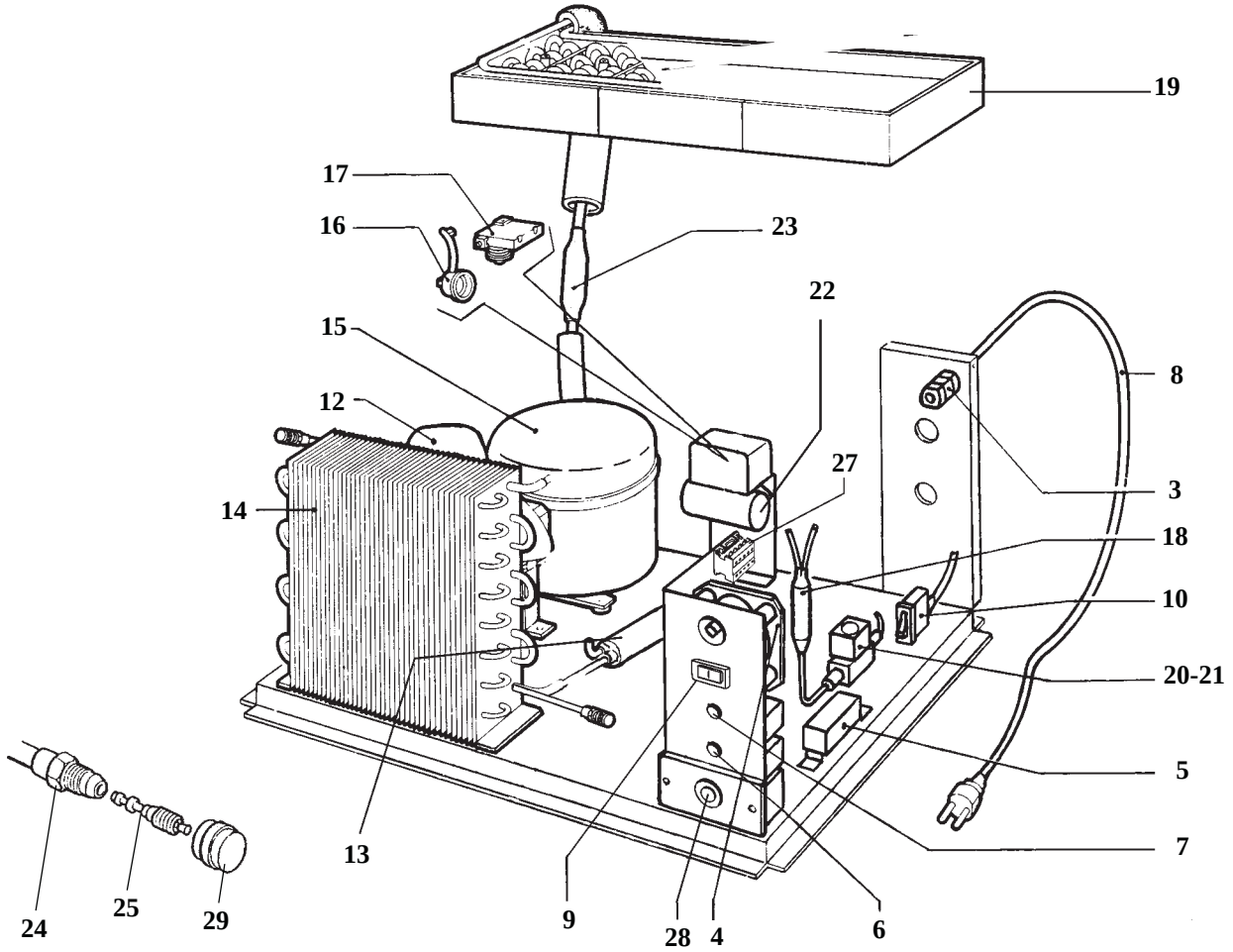

SC 70 - SM 70 - SCR 65 - SCR 85

TAVOLA 4

ITEM NO POS NO REP. NO REF. NO	PART. NO - CODICE REFERENCE - STUECK NR **SC70**	**SM70**	**SCR65**	**SCR85**	DESCRIPTION	DESCRIZIONE	DESIGNATION	BESCHREIBUNG
3	630107 00				CABLE TERMINAL RING	FISSACAVO	SERRE-CABLE	KABELKLEMME
4	620441 00				TIMER	TIMER	MINUTERIE	TIMER
5	620075 00				PRESSURE GAUGE	PRESSOSTATO	PRESSOSTAT	DRUCHWACHTER
6	630005 00				BIN THERMOSTAT	TERMOSTATO CONTENITORE	TERMOSTAT CONTENEUR	BEHALTERTHERMOSTAT
7	620201 01				EVAPORATOR THERMOSTAT	TERMOSTATO EVAPORATORE	EVAPORATEUR THERMOSTAT	VERDAMPFERTHERMOSTAT
8	630136 00				ELECTRIC CABLE	CAVO DI ALIMENTAZIONE	CABLE D'ALIMENTATION	KABEL
9	620442 02				SWITCH	COMMUTATORE	INTERRUPTEUR	UMSHALTER
10	620453 00				MAIN SWITCH	INTERRUTTORE LUMINOSO	INTERRUPTEUR LUMINEUX	LEUCHTEND SHALTER
12	620419 02 620419 33 620419 63	620419 02 620419 33 620419 63	620419 02 620419 33 620419 63	620419 04 620419 33 620419 64	FAN MOTOR FAN BLADE FAN SUPPORT	MOTORE VENTILATORE VENTOLA STAFFA	MOTO-VENTILATEUR PALETTE SUPPORT	LUFTER FACHER HALTER
13	630137 01				MECHANICAL FILTER	FILTRO MECCANICO	FILTRE MECANIQUE	MECHANISHFILTER
14	620405 00	620405 00	620405 00	620440 00	AIR CONDENSER	CONDENSATORE	CONDENSEUR	KONDENSATOR
15	670099 02	670099 02	670099 02	670099 03	COMPRESSOR	COMPRESSORE	COMPRESSEUR	KOMPRESSOR
16	650058 39	650058 39	650058 39	620058 42	PROTECTOR	PROTETTORE	RACCORD EVACUATION EAU	WASSERABFLUSSANSCHLUSSE
17	620057 44	620057 44	620057 44	620057 45	STARTING RELAY	RELE' DI AVVIAMENTO	RELAIS DEMARRAGE	ANLAUFRELAIS
18	630003 06				FILTER	FILTRO	FILTRE	FILTER
19	784492 00	784489 00	784463 01	784463 01	EVAPORATOR ASSY	ASSIEME EVAPORATORE	ENS. EVAPORATEUR	VERDAMPFER KOMPLETT
20-21	620306 27 620306 48	620306 27 620306 48	620306 27 620306 48	620306 46 620306 48	HOT GAS VALVE BODY HOT GAS VALVE COIL	CORPO VALVOLA GAS CALDO BOBINA VALVOLA GAS CALDO	CORPS DE VANNE GAZ CHAUD BOBINE DE VANNE GAZ CHAUD	HEISSGAS VENTILGEHAUSE HEISSGAS VENTILSPULE
22	620167 01	620167 01	620167 01	620167 01	START CAPACITOR	CONDENSATORE DI SPUNTO	CAPACITE' DEMARRAGE	START KONDENSATOR
23	784444 06	784444 06	78444406	784444 11	ACCUMULATOR ASSY	ASSIEME ACCUMULATORE	ENSAMBLE ACCUMULATEUR	SAMMLER UND SUGLEITUNGEN
24	650109 00				VALVE BODY	CORPO VALVOLA	CORPS DE VANNE	VENTILGEHAUSE
25	670012 00				PISTON	PISTONCINO PER VALVOLA	VALVE PISTON	VENTILKOLBEN
27	630119 02				CONTACTOR	CONTATTORE	CONTACTEUR	SHALTSCHUTZ
28	620443 02				SAFETY THERMOSTAT	TERMOSTATO DI SICUREZZA	THERMOSTAT DE SECURITE'	SICHERHEITSTHERMOSTAT
29	650106 00				VALVE CAP	CAPPUCCIO VALVOLA	CAPUCHON DE VANNE	VENTIL KLAPPE

SC 70 W - SM 70 W - SCR 65 W -SCR 85 W

TAVOLA 5

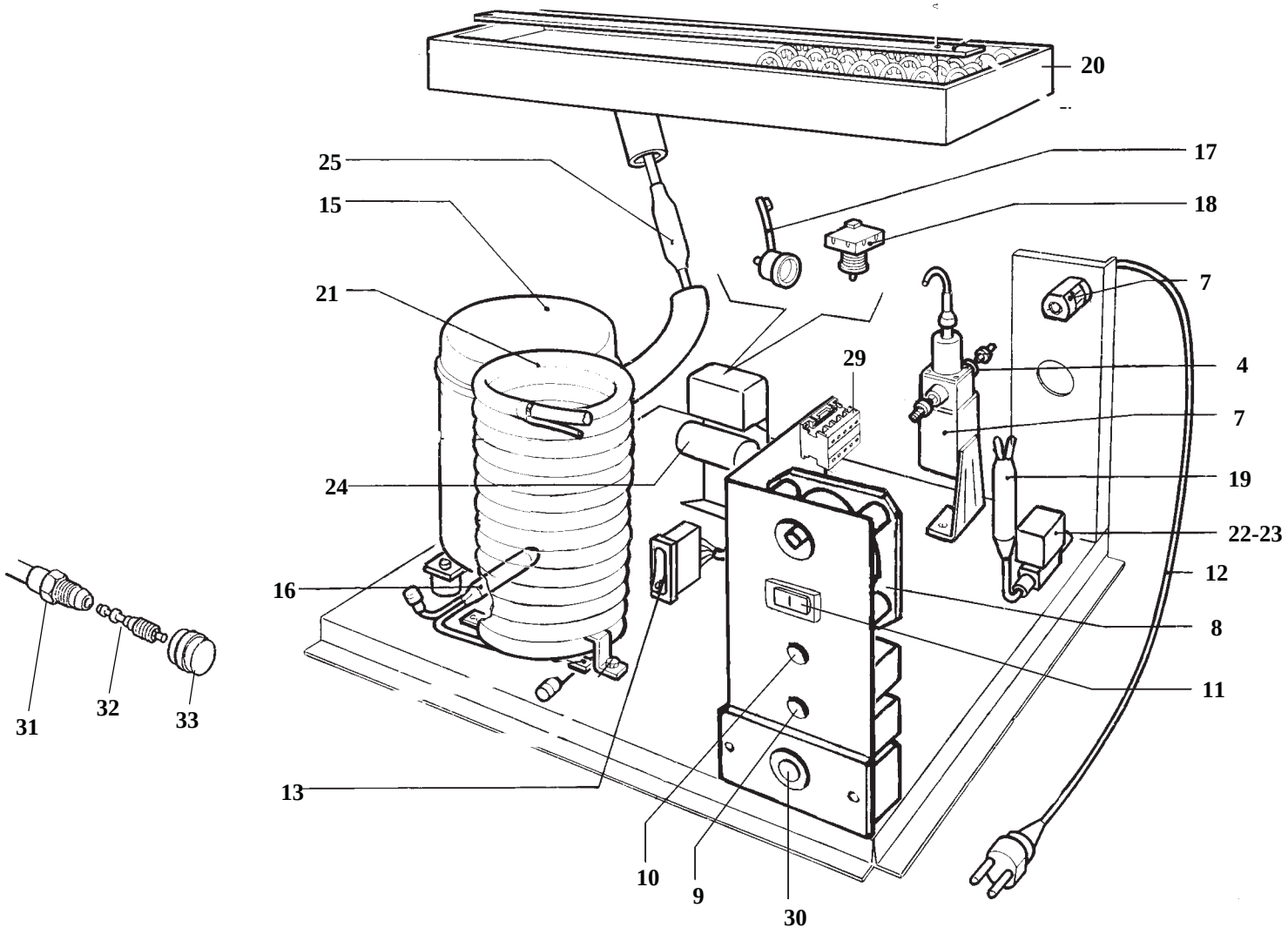

SC 70 - SM 70 - SCR 65 - SCR 85

TAVOLA 5

ITEM NO POS NO REP. NO REF. NO	PART. NO - CODICE REFERENCE - STUECK NR SC70	SM70	SCR65	SCR85	DESCRIPTION	DESCRIZIONE	DESIGNATION	BESCHREIBUNG
4	620111 00				WATER VALVE	VALVOLA PRESSOSTATICA	VANNE PRESSOSTATIQUE	WASSERVENTIL
7	630107 00				CABLE TERMINAL RING	FISSACAVO	SERRE-CABLE	KABELKLEMME
8	620441 00				TIMER	TIMER	MINUTERIE	TIMER
9	630005 00				BIN THERMOSTAT	TERMOSTATO CONTENITORE	THERMOSTAT CONTENEUR	BEHALTERTHERMOSTAT
10	620201 01				EVAPORATOR THERMOSTAT	TERMOSTATO EVAPORATORE	EVAPORATEUR THERMOSTAT	VERDAMPFERTHERMOSTAT
11	620442 01				SWITCH	COMMUTATORE	INTERRUPTEUR	UMSHALTER
12	630136 00				ELECTRIC CABLE	CAVO DI ALIMENTAZIONE	CABLE D'ALIMENTATION	KABEL
13	620453 00				MAIN SWITCH	INTERRUTTORE LUMINOSO	INTERRUPTEUR LUMINEUX	LEUCHTEND SHALTER
15	670099 02	670099 02	670099 02	670099 03	COMPRESSOR	COMPRESSORE	COMPRESSEUR	KOMPRESSOR
16	630137 01	630137 01	630137 01	630137 01	MECHANICAL FILTER	FILTRO MECCANICO	FILTRE MECANIQUE	MECHANISHFILTER
17	650058 39	650058 39	650058 39	650058 42	PROTECTOR	PROTETTORE	RACCORD EVACUATION EAU	WASSERABFLUSSANSCHLUSSE
18	620057 44	620057 44	620057 44	620057 45	STARTING RELAY	RELE' DI AVVIAMENTO	RELAIS DEMARRAGE	ANLAUFRELAIS
19	630003 06				FILTER	FILTRO	FILTRE	FILTER
20	784492 00	784489 00	784463 01	784463 01	EVAPORATOR ASSY	ASSIEME EVAPORATORE	ENS. EVAPORATEUR	VERDAMPFER KOMPLETT
21	620331 00	620331 00	620331 00	620331 00	WATER CONDENSER	CONDENSATORE AD ACQUA	CONDENSEUR A EAU	WASSER KONDENSATOR
22-23	620306 27 620306 48	620306 27 620306 48	620306 27 620306 48	620306 46 620306 48	HOT GAS VALVE BODY HOT GAS VALVE COIL	CORPO VALVOLA GAS CALDO BOBINE VALVOLA GAS CALDO	CORPS DE VANNE GAZ CHAUD BOBINE DE VANNE GAZ CHAUD	EISSGAS VENTILGHEAUSE HEISSGAS VENTILSPULE
24	620167 01	620167 01	620167 01	620167 01	START CAPACITOR	CONDENSATORE DI SPUNTO	CAPACITE' DEMARRAGE	START KONDENSATOR
25	784444 06	784444 06	784444 06	784444 11	ACCUMULATOR ASSY	ASSIEME ACCUMULATORE	ENSAMBLE ACCUMULATEUR	SAMMLER UND SUGLEITUNGEN
29	630119 02				CONTACTOR	CONTATTORE	CONTACTEUR	SHALTSCHUTZ
30	620443 02				SAFETY THERMOSTAT	TERMOSTATO DI SICUREZZA	THERMOSTAT DE SECURITE'	SICHERHEITSTHERMOSTAT
31	650109 00				VALVE BODY	CORPO VALVOLA	CORPS DE VANNE	VENTILGEHAUSE
32	670012 00				PISTON	PISTONCINO PER VALVOLA	VALVE PISTON	VENTILKOLBEN
33	650106 00				VALVE CAP	CAPPUCCIO VALVOLA	CAPUCHON DE VANNE	VENTIL KLAPPE

SC70 - SM70 - SCR65 - SCR85

COMPRESSOR CHART, TABELLA COMPRESSORI, TABLEAU COMPRESSEUR, KOMPRESSOR KARTE

MODEL MODELLO MODELE MODELL	VOLTS TENSIONE TENSION SPANNUNG	COMPRESSOR MODEL MOD. COMPRESSORE TYPE COMPRESSEUR KOMPRESSOR TYP	COMPRESSOR COMPRESSORE COMPRESSEUR KOMPRESSOR	RELAY RELE' RELAIS RELAIS	PROTECTOR PROTETTORE PROTECTEUR SCHUTZGERAT	START CAPACITOR CAPACITA' D'AVV. CAPACITE' DE DEMARRAGE START KONDENSATOR
SC70	115/60/1	-	-	-	-	-
SM70	115/60/1	-	-	-	-	-
SCR65	115/60/1	-	-	-	-	-
SCR85	115/60/1	-	-	-	-	-
SC70	230/60/1	CAJ4461Y	670099 07	620057 48	650058 78	620167 01
SM70	230/60/1	CAJ4461Y	670099 07	620057 48	650058 78	620167 01
SCR65	230/60/1	-	-	-	-	-
SCR85	230/60/1	-	-	-	-	-
SC70	230/50/1	CAJ4461Y	670097 02	620057 44	620058 39	620167 01
SM70	230/50/1	CAJ4461Y	670097 02	620057 44	620058 39	620167 01
SCR65	230/50/1	CAJ4461Y	670097 02	620057 44	620058 39	620167 01
SCR85	230/50/1	CAJ4492Y	670099 03	620057 45	620058 42	620167 01

SC70 - SM70 - SCR65 - SCR85

ELECTRIC COMPONENTS CHART, TABELLA COMPONENTI ELETTRICI, TABLEAU COMPOSANTS ELECTRIQUE, ELEKTRISCHEKARTE

MODEL MODELLO MODELE MODELL	VOLTS TENSIONE TENSION SPANNUNG	WATER PUMP POMPA POMPE A EAU WASSER PUMPE	FAN MOTOR ONLY MOTORE VENTILATORE MOTEUR VENTILATEUR LUFTER MOTOR	WATER INLET VALVE VALV. INGR. ACQUA V.E.M. ARRIVEE' EAU WASSEREIN. VENTIL	HOT GAS VALVE VALVOLA GAS CALDO V.E.M. GAZ CHAUDS HEISSGAZ VENTIL	TIMER TIMER MINUTERIE TIMER
SC70	115/60/1	-	-	-	-	-
SM70	115/60/1	-	-	-	-	-
SCR65	115/60/1	-	-	-	-	-
SCR85	115/60/1	-	-	-	-	-
SC70	230/60/1	620415 01	620419 02	650105 52	620306 27 / 620306 48	620441 00
SM70	230/60/1	620415 01	620419 02	650105 52	620306 27 / 620306 48	620441 00
SCR65	230/60/1	-	-	-	-	-
SCR85	230/60/1	-	-	-	-	-
SC70	230/50/1	620415 00	620419 02	650105 52	620306 27 / 620306 48	620441 00
SM70	230/50/1	620415 00	620419 02	650105 52	620306 27 / 620306 48	620441 00
SCR65	230/50/1	620415 00	620419 02	650105 52	620306 27 / 620306 48	620441 00
SCR85	230/50/1	620415 00	620419 04	650105 52	620306 46 / 620306 48	620441 00