PARTS LIST

for

KitchenAid®

INTERNATIONAL PART NUMBERS ITALICIZED

MIXER
VARIATIONS
OF
KSM90, KSM103, AND KSM110
SOLID STATE

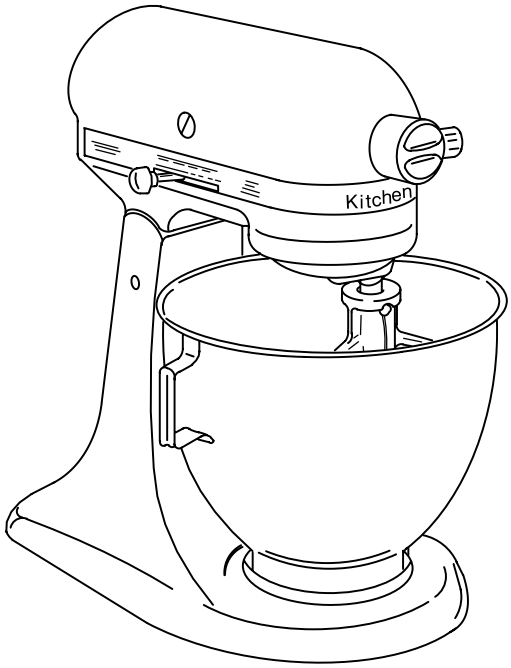

KITCHENAID

ST. JOSEPH MICHIGAN 49085

4−04 Litho in U.S.A. (bd)

© 2004 KITCHENAID

Part No. 8204542 Rev. A

COLOR VARIATION PARTS

For Models:KSM90, KSM103, & KSM110

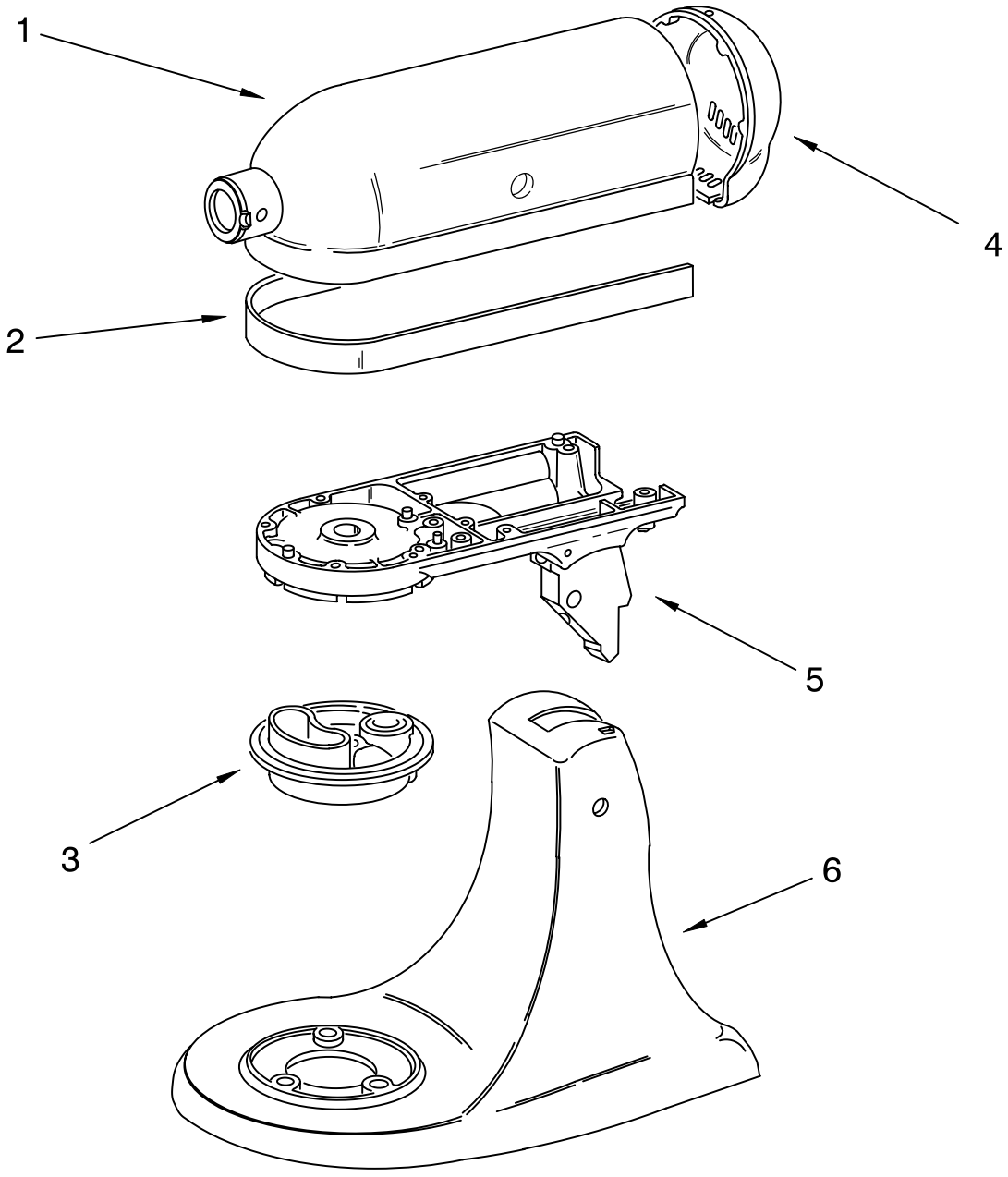

FOR ORDERING INFORMATION REFER TO PARTS PRICE LIST

COLOR VARIATION PARTS

For Models:KSM90, KSM103, & KSM110

Illus. No.	Part No.	DESCRIPTION
1		Motor Housing
	240291−1	White
	9704752	Satin Copper
	240291−7	Cobalt Blue
	9706270	Nickel
	9706461	*Nickel*
	9704004	Metallic Chrome
	9704025	*Metallic Chrome*
	240291−22	Imperial Gray (Crinkle)
	240291−13	Onyx Black
	240291−10	Empire Green
	240291−16	Almond Creme
	4176227	Royal Crimson
	240291−21	Empire Red
	240291−20	Majestic Yellow
	9706473	Pink
	4176337	Chrome
	9704004	Black Chrome
	9704004	KSM103 & KSM110
	9705243	Caviar
2		Trim Band
		United States
	9702645	Black on Silver
	9702633	Chrome & KSM110 Models
	9704530	White
	9702635	White (KSM90PSWH)
	9701264	White on White
	9701468	Almond Creme
		International & Taiwan
	9704643	*Black on Silver*
	9704641	*White*
		Swiss
	9704655	*Black on Silver*
	9704653	*White*
		Japan
	9705180	*Black on Silver*
	9705182	*White*
		Australia
	9704498	*Black on Silver*
3		Planetary
	240286−1	White
	9704755	Stain Copper
	240286−10	Cobalt Blue
	9706271	Nickel
	9704006	Metallic Chrome
	9706670	*Metallic Chrome*
	240286−24	Imperial Gray (Crinkle)
	240286−16	Onyx Black
	240286−13	Empire Green
	240286−18	Almond Creme
	4176226	Royal Crimson
	240286−23	Empire Red
	240286−22	Majestic Yellow
	9706475	Pink
	4176338	Chrome
	9704006	Black Chrome
	9704006	KSM103 & KSM110
	9705244	Caviar

Illus. No.	Part No.	DESCRIPTION
4		End Cover
	240253−1	White
	9704757	Satin Copper
	240253−8	Cobalt Blue
	9706268	Nickel
	4176449	Metallic Chrome
	9704029	*Metallic Chrome*
	240253−23	Imperial Gray (Crinkle)
	240253−14	Onyx Black
	240253−11	Empire Green
	240253−16	Almond Creme
	4176224	Royal Crimson
	240253−22	Empire Red
	240253−21	Majestic Yellow
	9706469	Pink
	4176339	Chrome
	4176449	Black Chrome
	4176449	KSM103 And KSM110
	9705241	Caviar
5		Lower Gearcase
	240350−4	White
	9701393	*White (United Kingdom)*
	240350−20	*White on White (Japan)*
	9704749	Satin Copper
	240350−31	Cobalt Blue
	9701420	*Cobalt Blue*
	9706269	Nickel
	9706459	*Nickel*
	9704002	Metallic Chrome
	9707219	*Metallic Chrome*
	240350−86	Imperial Gray (Crinkle)
	240350−56	Onyx Black
	240350−46	Empire Green
	9701422	*Empire Green (International)*
	240350−74	*Empire Green (Japan)*
	240350−62	Almond Creme
	4176221	Royal Crimson
	240350−84	Empire Red
	240350−91	*Empire Red*
	240350−82	Majestic Yellow
	240350−93	*Majestic Yellow*
	9706471	Pink
	9707364	*Pink*
	9701398	Chrome
	9704002	Black Chrome
	9704002	KSM103 And KSM110
	9705242	Caviar

Illus. No.	Part No.	DESCRIPTION
6		Pedestal
	240151−1	White
	3184273	*White*
	9704747	Satin Copper
	240151−8	Cobalt Blue
	9701768	*Cobalt Blue*
	9706264	Nickel
	9706457	*Nickel*
	9704000	Metallic Chrome
	9707189	*Metallic Chrome*
	240151−21	Imperial Gray (Crinkle)
	9703247	*Imperial Gray*
	240151−13	Onyx Black
	3184275	*Onyx Black*
	240151−11	Empire Green (Domestic & Japan)
	9701769	*Empire Green*
	240151−15	Almond Creme
	9703248	*Almond Creme*
	4176229	Royal Crimson
	240151−20	Empire Red
	9703245	*Empire Red*
	240151−19	Majestic Yellow
	9703246	*Majestic Yellow*
	9706467	Pink
	9707362	*Pink*
	4176335	Chrome
	9701767	*Chrome*
	9704000	Black Chrome
	9704000	KSM103 & KSM110
	9705237	Caviar

Availability of All Colors Subject to Change. Any Color Not Listed is No Longer Available. If Additional Colors Are Added, This Page Will Be Updated.

CASE, GEARING AND PLANETARY UNIT

For Models:KSM90, KSM103, & KSM110

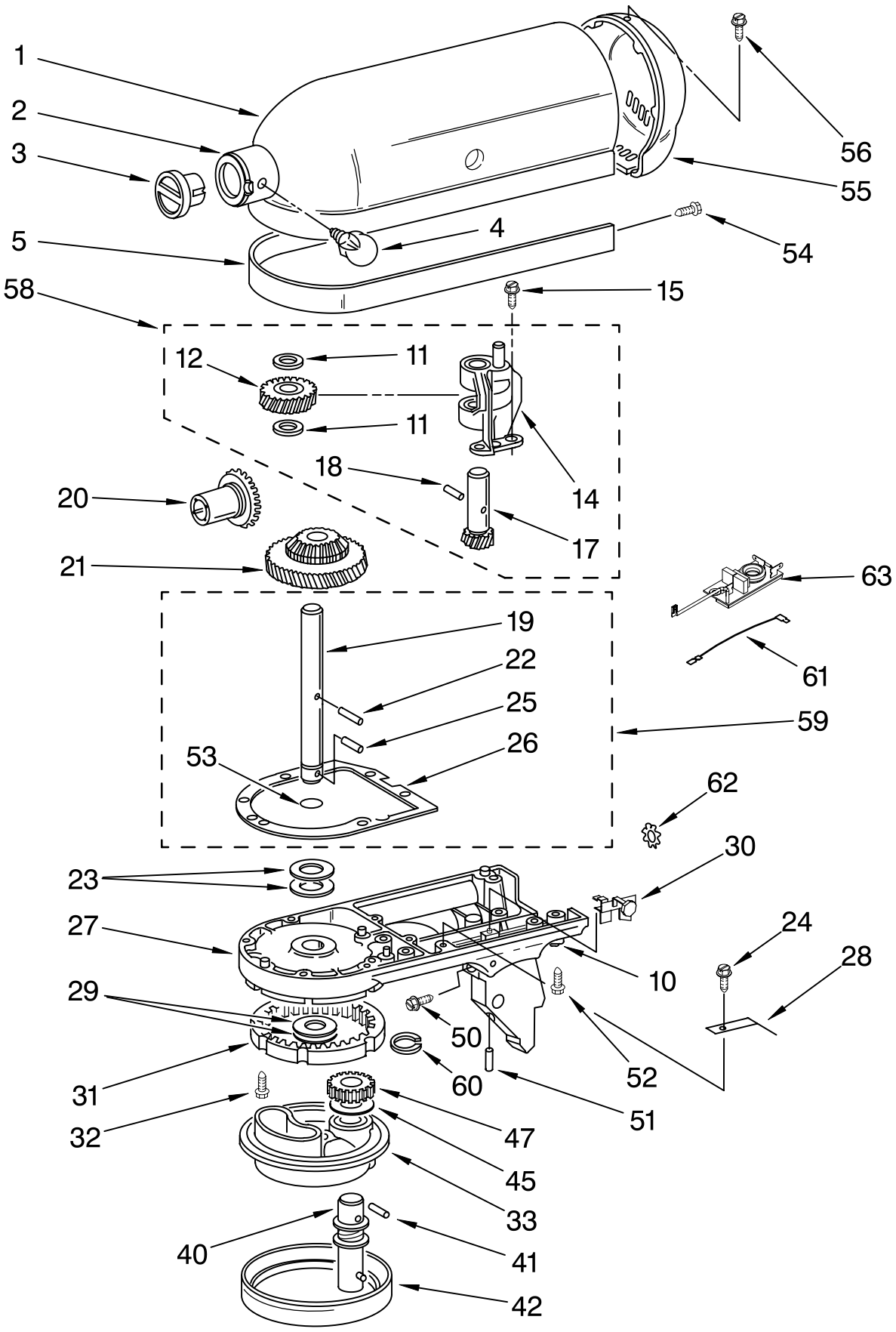

FOR ORDERING INFORMATION REFER TO PARTS PRICE LIST

CASE, GEARING AND PLANETARY UNIT

For Models:KSM90, KSM103, & KSM110

Illus. No.	Part No.	DESCRIPTION
1	**	Gearcase Motor Housing (Includes Illus 2)
2	4159709	Ring, Attachment Hub
3		Cap, Attachment Hub
	242765−2	Chrome
	242765−4	White
4		Thumb Screw
	4162142	Black
	240374−2	White (Storm Gray)
	240374−3	Buff
5	**	Band, Trim
10	4159479	Lock Washer, #10 Light
11	3180161	Washer, Fiber Black, Gray
12	4162897	Worm Gear (23T)
14	240308	Worm Gear Bracket And Bearing
15	3400022	Screw And L.W. Assy. #10−24 X 7/16" Phil. Fil. Hd. (3)
17	240210−2	Shaft & Pinion (10T)
18	9705444	Pin, Grooved
19	240026	Shaft, Vertical Center
20	9705130	Gear, Attachment Hub Bevel (23T)
21	9703905	Bevel Pinion (19T) & Center Gear (62T)
22	240018−1	Pin (Vertical Center Shaft)
23	3180163	Washer, Fiber Black, Gray
24	*4176022*	*Screw (International)*
25	9705443	Pin, Grooved
26	4162324	Gasket, Transmission Case
27	**	Lower Gear Case
28	*9701864*	*Spring Flat (International)*
29	3180163	Washer, Fiber Black, Gray
30	*9701866*	*Headlock Assembly (International)*
31	9703904	Gear, Internal
32	103994	Screw, Special (5)
33	**	Planetary
40	4176067	Agitator Shaft (Includes Illus. 60)
	3184052	*Agitator Shaft (Includes Cup) (International)*
41	240018−1	Pin (Agitator Shaft Pinion
42	240285	Ring, Planetary Drip
	240285−2	Polished
45	3180160	Washer, Shim (.015" Thk.) (.031" Thk.)
47	9703903	Pinion, Gear (18T) (Agitator Shaft)
50	4160413	Screw, Adjusting
51	4159264	Set Screw, 1/4"−28 X 3/8" Hdls., Cup Pt.
52	3400025	Machine Screw, 10−24 X 1 Fil. Head
53	67500−55	"O" Ring
54	4159430	Screw, Self Tapping 6−32 X 1/4" Phil. Pan Hd. Type F
55	**	Cover, End
56	4162914	Screw, 6−32 X 3/8 Phil. Oval Hd.
58	240309−2	Worm Gear Bracket And Gear (10 T & 23 T) (Incls. Illus 11 thru 14 17 & 18)
59	4160474	Center Shaft & "O" Ring (Incls. Illus. 19,22,25,26, & 53)
60	9703438	Ring
61	*9702311*	*Lead, Filter to Control Board*
62	*3400900*	*Lockwasher*
63	*9706789*	*Filter, RFI*
	9705132	*Taiwan*

MOTOR AND CONTROL PARTS

For Models:KSM90, KSM103, & KSM110

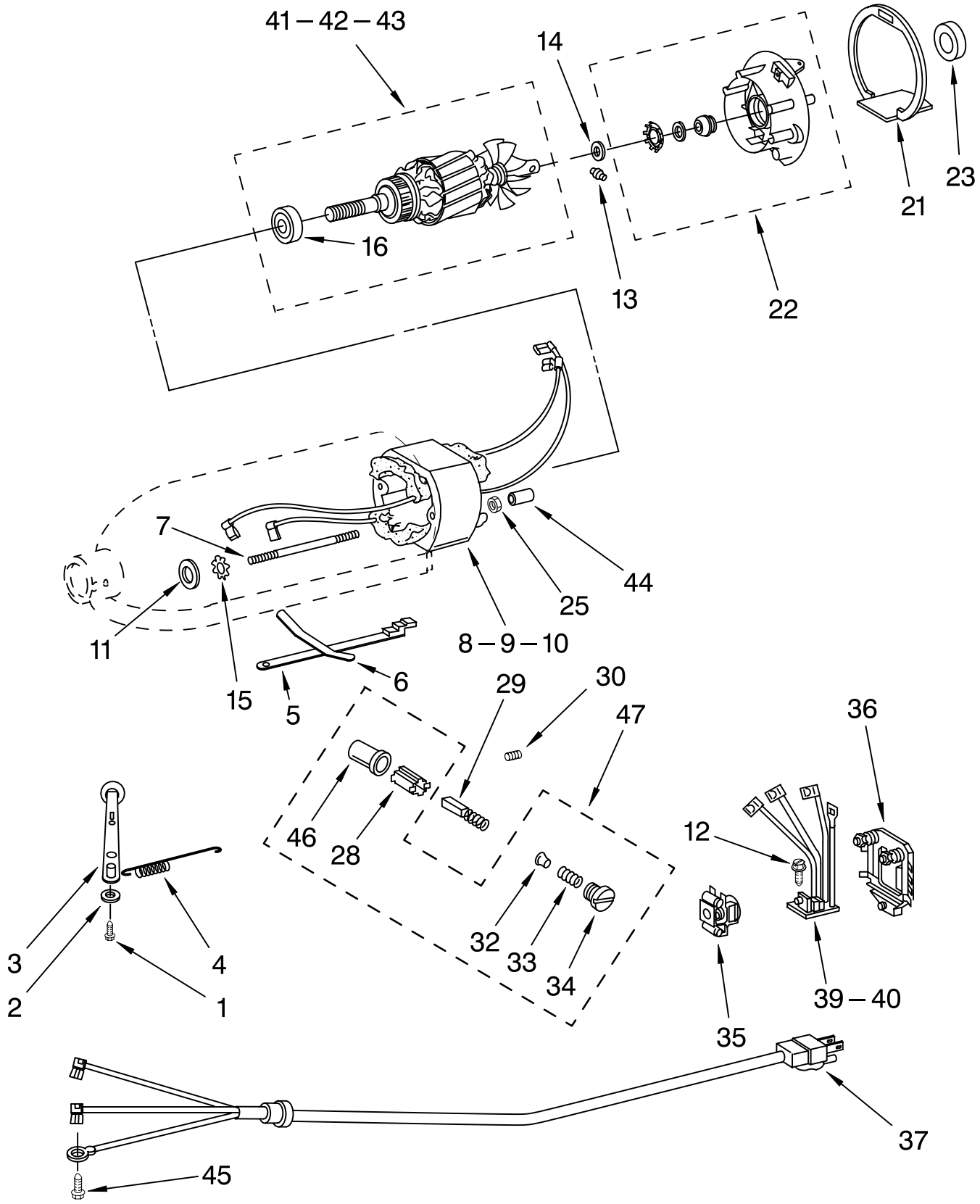

FOR ORDERING INFORMATION REFER TO PARTS PRICE LIST

MOTOR AND CONTROL PARTS

For Models:KSM90, KSM103, & KSM110

Illus. No.	Part No.	DESCRIPTION
1	110679	Screw, Pivot
2	116241	Washer, Spring
3		Switch Lever And Stud
	3184193	Black
	3184194	Storm Grey
	3184195	Buff
4	3183680	Spring, Control Plate
	3183690	*International*
5	3184176	Speed Link & Cam
6	4162035	Spring, Flat
7	240769	Screw, Stator
8	9702695	Field Assembly (Must Use With Item # 41) 120 Volts
9	*9701670*	*Field Assembly (International) (Must Use With Illus. 42) (230 Volts)*
10	*4176217*	*Field Assembly (Japan) (Must use with Item 13) (100 Volts)*
11	9704324	Washer, Bearing
12	3400402	Screw, Self Tapping 4−40 X 5/16" Phil. Pan Hd. Type TT
13	16998	Stud, Governor Drive
14	3180162	Washer, Spacing
15	3400900	Washer
16	9708320	Ball Bearing
21	240775−1	Seal, End
	3184356	*International*
22	3180526	Bracket, Bearing Asm.
23	3180238	Washer, Felt
25	8533905	Nut, Machine Hex (10−24)
28	240680	Insert, Brush Holder
29	9706416	Brush, Carbon
30	9707926	Set Screw, 10−24 X 1/4" Hdls. Cup Pt
32	116286	Cap, Spring Seat
33	116287	Spring, Cap
34		Cap, Brush Holder
	3184212	Black
	3184211	White
	3184213	Almond Creme

Illus. No.	Part No.	DESCRIPTION
35	17830	Governor Assembly
36	240904−2	Control Plate Assembly
37		Cord & Plug White
	9701025	United States
	9702318	*International*
	9704389	*Swiss*
	9702314	*United Kingdom*
	9702368	*Australia*
		Black
	9701026	United States
	9702319	*International*
	9704390	*Swiss*
	9702315	*United Kingdom*
	9706755	*Taiwan*
	9704812	*Japan*
39	9706595	Phase Control Board (120 Volt)
40	*9706596*	*Phase Control Board (230 Volt)*
41	9708315	Armature & Bearing (120 V.) Domestic & Taiwan) (Must use with Illus. 8)
42	*9708316*	*Armature & Bearing (230 Volt) (Must use with Item 9)*
43	*9708314*	*Armature & Bearing (Japan) (Must Use with Item 10) (100 Volts)*
44	4162634	Sleeve, Motor Stud
45	3184609	Screw, Ground Tapping (10−24 X 1/4") Phil.
46	3179908	Housing, Brush Holder
47	4162546	Brush Holder (Incls. Illus. 28, 32, 33, 34, & 46)

Illus. No.	Part No.	DESCRIPTION
OPTIONAL PARTS		
OPTIONAL ATTACHMENTS, ACCESSORIES AND SERVICE ITEMS		
	4164839	Speed Disc (Service Tool)
	4160588	Grease, Planetary
	4164778	Mixer Attachment Pak (Includes Food Grinder (FG−A), Food Strainer (FVSP), And Vegetable Slicer, (RVS−A) (FPP−A)
	4164749	Food Grinder (FG−A)
	4164751	Grain Mill (GM−A)
	4164768	Pasta Maker And Food Grinder (Includes SNP Pasta Maker Plates) (SN/FG−A)
	4164775	Fruit/Vegetable Strainer Parts (Use With FG−A Model Only) (FVSP)
	4164750	Rotor Slicer/Shredder (With 4 Standard Cones) Fine Shredder, Coarse Shredder, Thick Slicer, And Thin Slicer (RVS−A)
	3177975	Pouring Shield (KPS2CL)
	4164824	Pasta Maker Plates (SNP−A)
	4164774	Fruit/Vegetable Strainer And Food Grinder (FVS/FG−A)
	3180617	Cover, Decorative (Cotton Polyester)
	4162838	Food Tray (FT)
	4164748	Juicer (JE)
	4164747	Can Opener (CO)
	4164803	Sausage Stuffer Kit (SSA)
	3177924	Bowl Cover, Plastic Non−Sealing
	4163337	Bowl, Stainless With Handle
	3180262	Bowl, 3 Qt. (KSM103 & KSM110)
	4162160	Bowl, Satin Stainless

FOR ORDERING INFORMATION REFER TO PARTS PRICE LIST

BASE AND PEDESTAL UNIT

For Models:KSM90, KSM103, & KSM110

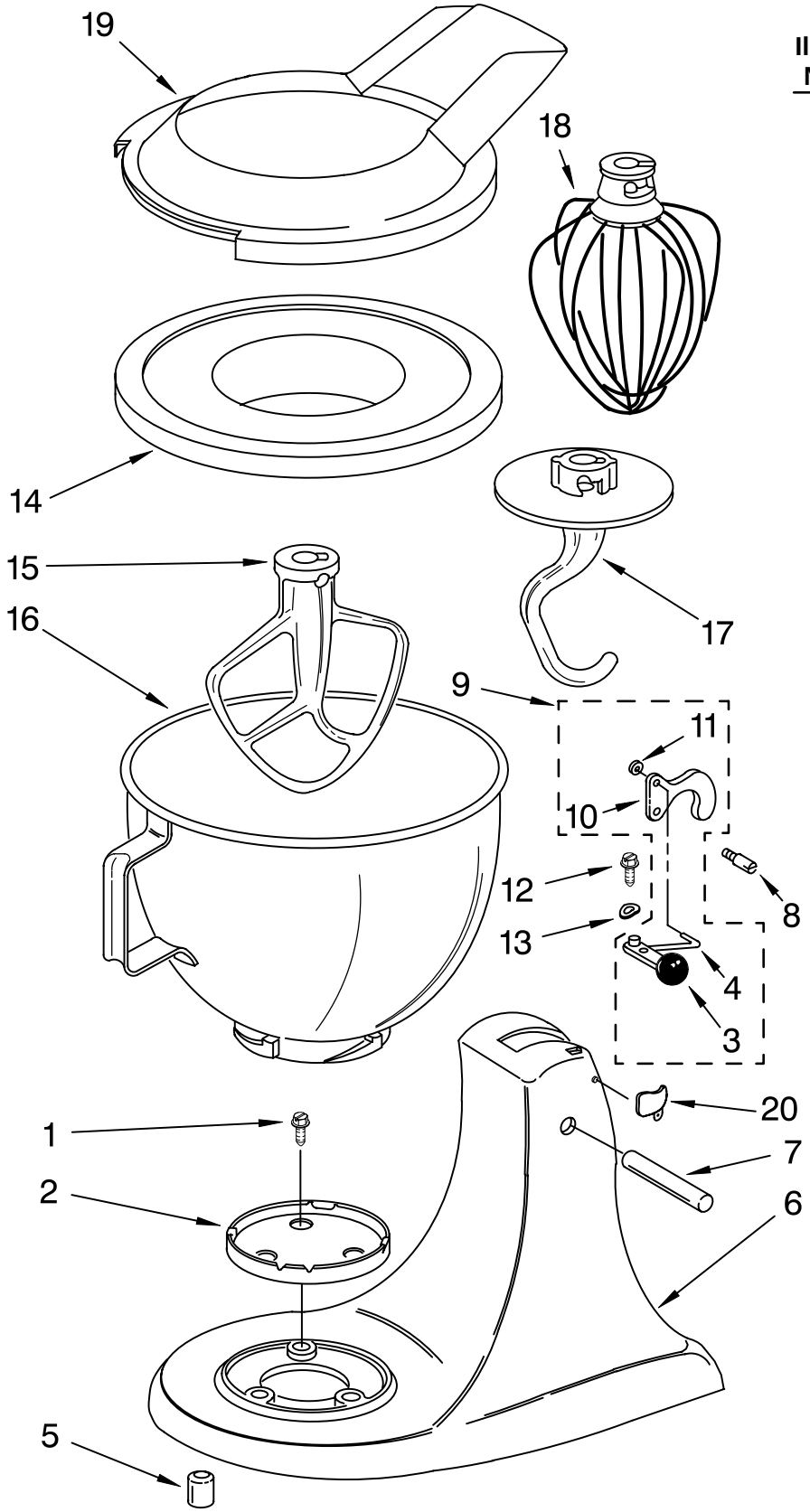

Illus. No.	Part No.	DESCRIPTION
1	3400020	Screw 10−24 X 1/2" Phil. Flat Hd. Type F
2	4163032	Screw Cap Kit
3		Lever, Latch
	4176024	Black
	3184178	*Black*
	242928−2	White (Storm Gray)
4	24450	Link, Latch
5	115792	Foot, Base
6	**	Pedestal
7	16910	Pin, Hinge
8	103993	Screw, Latch Bearing
9	24452−2	Latch, Link & Lever (Incls. Illus. 3, 4, 10 & 11)
	3184200	*International*
10	4162206	Latch
11	4159598	Washer
12	110679	Screw, Pivot
13	116241	Washer, Spring
14	*4176018*	*Cover, Bowl*
15	9707669	Beater, Flat
16	4163336	Bowl And Base (4 1/2 Qt.)
17	9707671	Dough Hook
18	9704329	Wire Whip
19		Pouring Shield
	9706633	Professional Mod.
	4176452	*International*
20		*Head Lock (International)*
	3184262	*White*
	3184264	*Black*

LITERATURE PARTS

	Guide, Use And Care
LIT9707917	United States
LIT9705170	*(International)*
LIT9705125	*Japan*
LIT8204542	Repair Parts List

FOR ORDERING INFORMATION REFER TO PARTS PRICE LIST