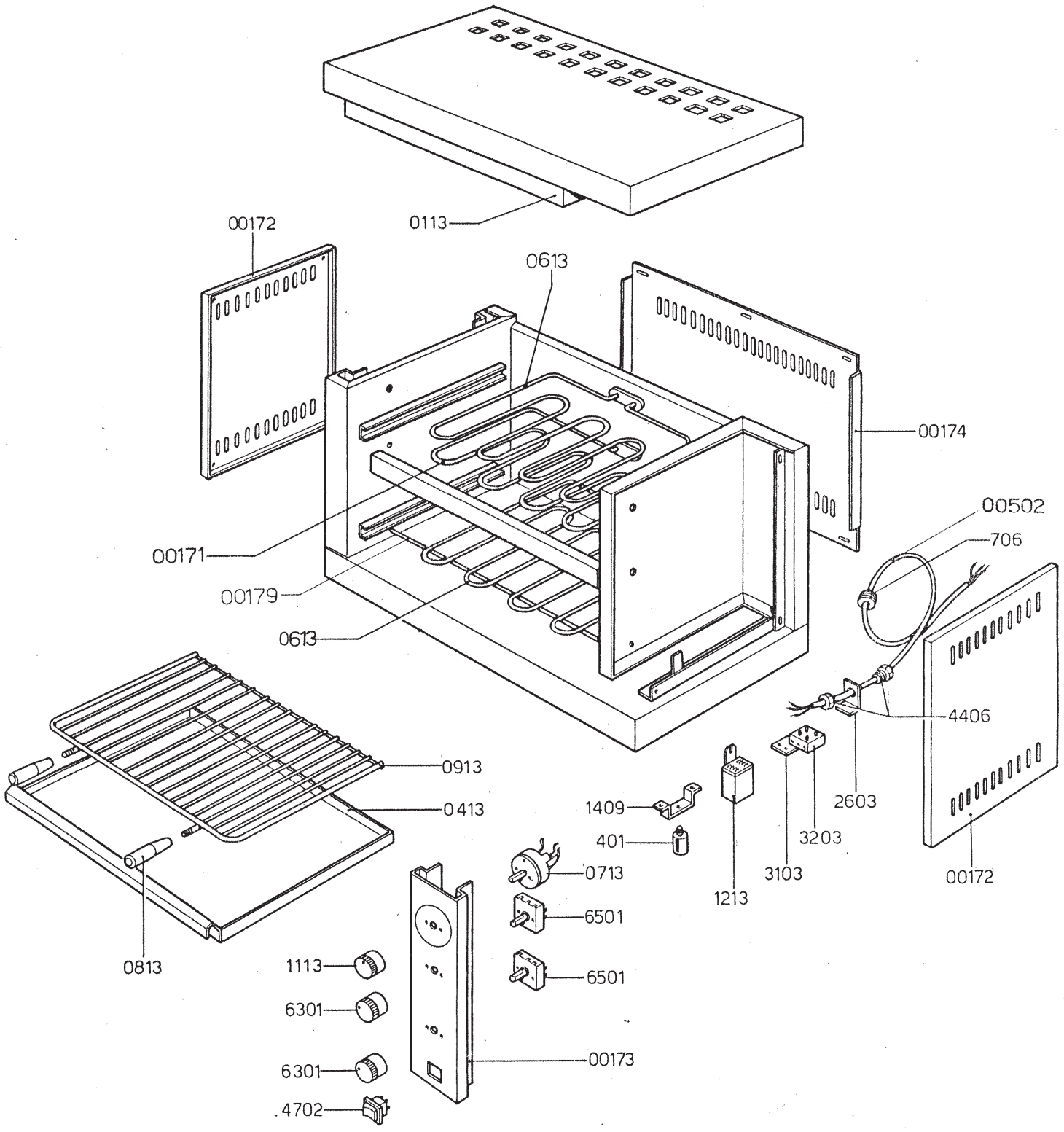
0113
00172
0613
00174
00171
00179
0613
00502
706
4406
2603
3203
3103
00172
0913
0413
0813
1409
401
1213
0713
6501
6501
1113
6301
6301
4702
00173

## CODICI RICAMBIO PER FINITO / SPARE PARTS FOR THE FINISHED PRODUCT

**Aggiornato al/Updated to 27/11/17**

| Artic./Item | Descrizione/Description | Modello/Model |
|---|---|---|
| **060090** | **TOASTER**<br>**TOASTER** | **TSP/0** |

| Cons./Recom. | Pos./Posit. | Ricambio/Replacement | | | Prezzo/Price List |
|---|---|---|---|---|---|
| | 00000113 | RC00000113 | CIELO ESTERNO TOASTER | EXTERNAL UPPER PANEL TS | 77,46 |
| | 00000401 | RC00000401 | PIEDINO IN GOMMA SEF-TS-IR | RUBBER FOOT | 4,08 |
| | 00000413 | RC00000413 | BACINELLA TOASTER | DRIP TRAY | 48,00 |
| * | 00000613 | RC00000613 | RESISTENZA ELETT. 1.5KW 230V | HEATING ELEMENT | 49,65 |
| | 00000706 | RC00000706 | PASSACAVO | CABLE GLAND | 3,97 |
| * | 00000713 | RC00000713 | TIMER | TIMER | 28,14 |
| | 00000813 | RC00000813 | IMPUGNATURA | HANDLE | 8,38 |
| | 00000913 | RC00000913 | GRIGLIA CROMATA TOASTER | CHROMIUM-PLATED GRID TS | 37,51 |
| | 00001113 | RC00001113 | MANOPOLA PER TIMER TOASTER | KNOB FOR TIMER TS | 6,62 |
| * | 00001213 | RC00001213 | RELAIS 16A 220V TOASTER | RELAY | 45,34 |
| * | 00004702 | RC00004702 | INTERRUTTORE TS-IR | SWITCH | 13,57 |
| | 00006301 | RC00006301 | MANOPOLA SIMMOSTATO | KNOB FOR ENERGY REGULATOR TS-SE-SEF-SEL | 5,74 |
| * | 00006501 | RC00006501 | SIMMOSTATO | ENERGY REGULATOR | 23,94 |
| * | 00171000 | RC00171000 | RESISTENZA ELETTRICA 1KW 230V | HEATING ELEMENT | 48,88 |
| | 00172000 | RC00172000 | PANNELLO LATERALE TSP | SIDE PANEL TSP | 24,25 |
| | 00173000 | RC00173000 | CRUSCOTTO TSP | CONTROL PANEL TSP | 23,23 |
| | 00174000 | RC00174000 | SCHIENALE TSP | BACK PANEL TSP | 20,30 |
| | 00179000 | RC00179000 | TONDINO SUPPORTO RESISTENZE TS | HEATING ELEMENT SUPPORT BAR TS | 7,42 |
| | 00304000 | RC00304000 | MORSETTO EQUIPOTENZIALE COMPLETO | EQUIPOTENTIAL CONNECTING BLOCK | 6,62 |



**L'azienda si riserva il diritto di apportare ulteriori aggiornamenti senza preavviso. / The data may be updated without prior warning**