FAGOR

FAGOR INDUSTRIAL

DESPIECE TÉCNICO
TECHNICAL PARTS

Lavadoras
Washer extractors



MODELOS
LA-11-14-18-25-35 TP

Diciembre 2015 December
Revisado Julio 2016 July revised



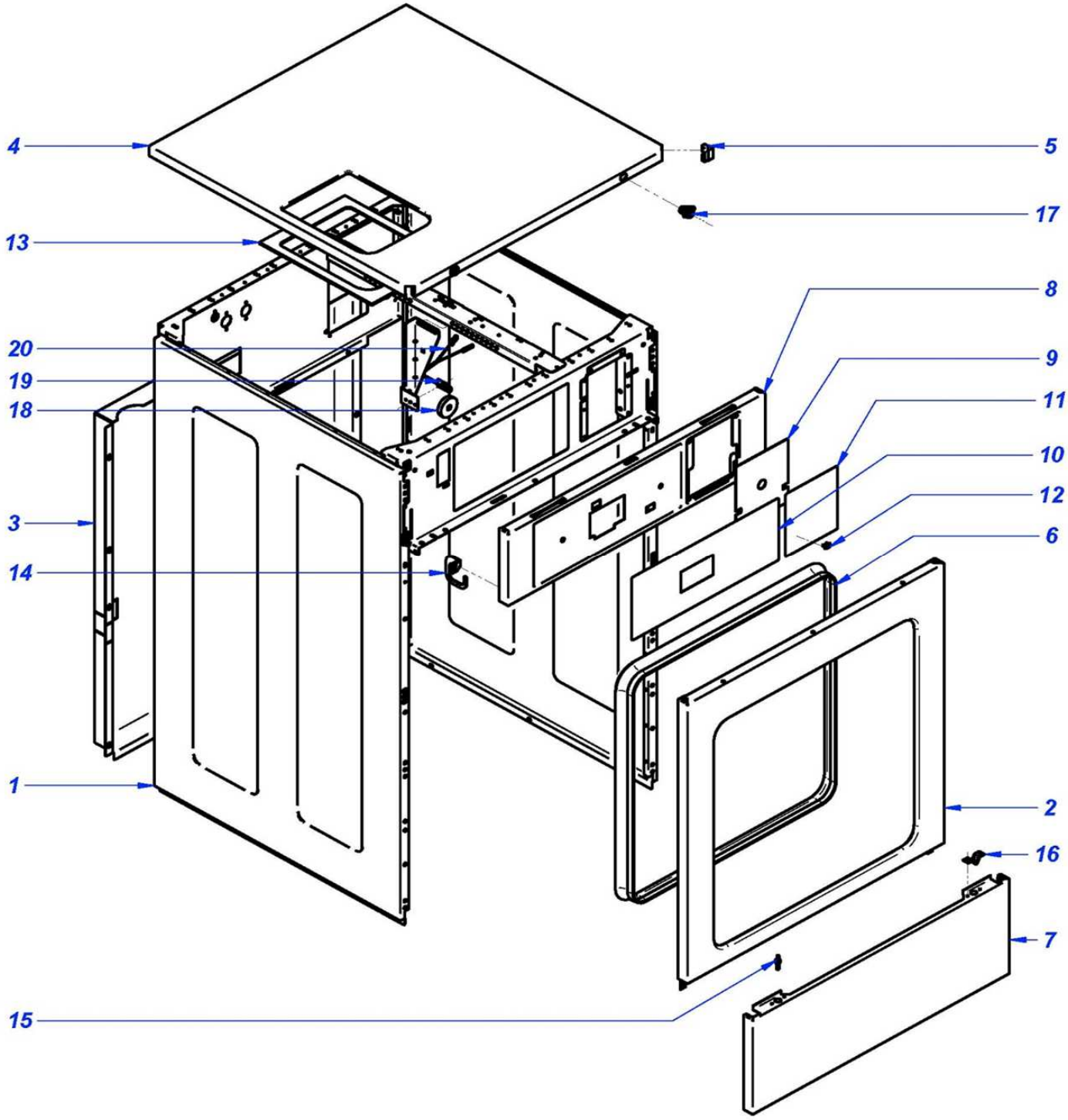

Drawing Nr.	Signature	Date	MUEBLE / CABINET	Sheet
	Iban R.	dic-15	LA-11-14-18-25-35 TP	1

FAGOR

	MUEBLE / CABINET	LÁMINA / DRAWING		FAGOR

ITEM	REFERENCIA REFERENCE	DENOMINACIÓN	DENOMINATION	LA-11 TP	LA-14 TP	LA-18 TP	LA-25 TP	LA-35 TP			RECOMMENDED	ELIMINADO ELIMINATED	INTRODUCIDO INTRODUCED
1	12131484	PANEL LATERAL	SIDE PANEL	2									
1	12110869	PANEL LATERAL	SIDE PANEL		2								
1	12110880	PANEL LATERAL	SIDE PANEL			2							
1	12110881	PANEL LATERAL	SIDE PANEL				2						
1	12132409	PANEL LATERAL	SIDE PANEL					2					
2	12120898	PANEL FRONTAL RECTO	STRAIGHT FRONT PANEL	1									
2	12132412	PANEL FRONTAL RECTO	STRAIGHT FRONT PANEL		1								
2	12132415	PANEL FRONTAL RECTO	STRAIGHT FRONT PANEL			1							
2	12132416	PANEL FRONTAL RECTO	STRAIGHT FRONT PANEL				1						
2	12132417	PANEL FRONTAL RECTO	STRAIGHT FRONT PANEL					1					
3	12001300	PANEL POSTERIOR	REAR PANEL	1									
3	12001239	PANEL POSTERIOR	REAR PANEL		1								
3	12001211	PANEL POSTERIOR	REAR PANEL			1							
3	12001154	PANEL POSTERIOR	REAR PANEL				1						
3	12111421	PANEL POSTERIOR	REAR PANEL					1					
4	12132421	REP. ENCIMERA	WORKTOP	1									
4	12131524	REP. ENCIMERA	WORKTOP		1								
4	12132422	REP. ENCIMERA	WORKTOP			1							
4	12132423	REP. ENCIMERA	WORKTOP				1						
4	12132424	REP. ENCIMERA	WORKTOP					1					
5	12039188	CANTONERA R1	R1 CORNER	2	2	2	2	2					
6	11000161	PERFIL EMBELLECEDOR A1 104/2	A1 104/2 PROFILE	3	3	3	3	4					
7	12116089	ZOCALO	SKIRTING	1									
7	12111769	ZOCALO	SKIRTING		1								
7	12116093	ZOCALO	SKIRTING			1							
7	12116098	ZOCALO	SKIRTING				1						
8	12132426	REP PORTAMANDOS	CONTROL PANEL	1									
8	12131534	REP PORTAMANDOS	CONTROL PANEL		1								
8	12131535	REP PORTAMANDOS	CONTROL PANEL			1							
8	12131536	REP PORTAMANDOS	CONTROL PANEL				1						
8	12132427	REP PORTAMANDOS	CONTROL PANEL					1					
9	12120271	TAPA MONEDERO COMPLETA	COMPLETE COIN COVER	1	1	1	1	1					
10	12113512	ADHESIVO FAGOR TP	FAGOR TP ADHESIVE	1	1	1	1	1			X		
11	12113854	ADHESIVO ON/OFF FAGOR	FAGOR ON/OFF ADHESIVE	1	1	1	1	1			X		
12	12119954	TAPON USB	USB CAP	1	1	1	1	1					
13	12009796	APOYO CUBETA DE DETERGENTES	DETERGENT TRAY SUPPORT	1	1	1	1	1					
14	12131540	BISAGRA PORTAMANDOS IZQ	CONTROL PANEL LEFT HINGE	1	1	1	1	1					
14	12131542	BISAGRA PORTAMANDOS DCH	CONTROL PANEL RICHT HINGE	1	1	1	1	1					
15	12008693	PITON CIERRE	LOCK BOLT	7	7	7	13	13					
16	12008460	CIERRRE MUELLE Fre.700 MIKALOR	Fre.700 MIKALOR LOCK SPRING	7	7	7	13	13					
17	12094428	CERRADURA 0330	0330 LOCK	2	2	2	2						
17	12122600	CERRADURA 0330	0330 LOCK					2					
18	12023314	IMAN DESEQUILIBRIO DIAM. 50	DIAM. 50 IMBALANCE MAGNET	1	1	1	1	1					
19	12024066	AMARRE INTERRUPTOR MAGNETICO	MAGNETIC SWITCH HOLDER	1	1	1	1	1					
20	12024477	INTERRUP. 0,04 1VIA 1 POS MAGNET.	0,04 1VIA 1 POS MAGNET SWITCH	1	1	1	1	1					

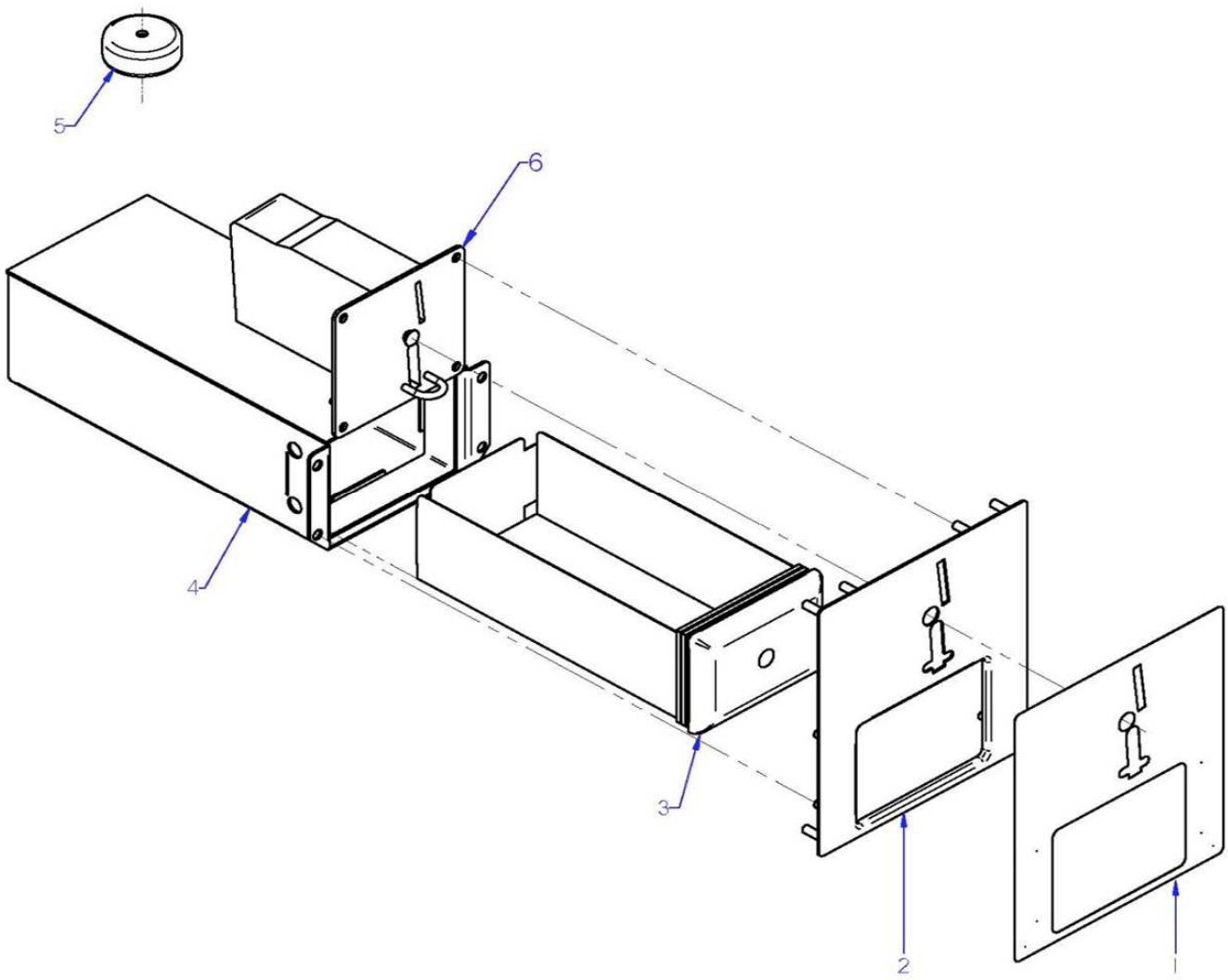

Drawing Nr.	Signature	Date	MONEDERO / KIT COIN	Sheet
	Iban R.	dic-15	LA-11-14-18-25-35 TP	2

FAGOR

	KIT MONEDERO / COIN SLOT KIT	LÁMINA / DRAWING		FAGOR

ITEM	REFERENCIA REFERENCE	DENOMINACIÓN	DENOMINATION	LA-11 TP	LA-14 TP	LA-18 TP	LA-25 TP	LA-35 TP			RECOMMENDED	ELIMINADO ELIMINATED	INTRODUCIDO INTRODUCED
1	12007739	ADHESIVO MONEDERO FAGOR	COIN SLOT ADHESIVE FAGOR	1	1	1	1	1					
2	12130334	CHAPA MONEDERO COMPL.	COIN SLOT PLATE COMPL.	1	1	1	1	1					
3	12023400	CAJA MONEDAS CON LLAVE (XL 8 MON	COIN DRAWER (XL 8 MONEY BOX)	1	1	1	1	1					
4	12130337	PORTA CAJA MONEDAS COMPL.	COIN BOX HOLDER COMPL.	1	1	1	1	1					
5	12009621	TRANSFORMADOR MONEDERO	COIN SLOT TRANSFORMER	1	1	1	1	1					
6	12023342	MONEDERO WH (EUR-GBP)	COIN SLOT WH (EUR-GBP)	1	1	1	1	1					
6	12044494	MONEDERO WH (ARS-CLP-BRL)	COIN SLOT WH (ARS-CLP-BRL)	1	1	1	1	1					
6	12044490	MONEDERO WH (AUD-NZD-JPY)	COIN SLOT WH (AUD-NZD-JPY)	1	1	1	1	1					
6	12044488	MONEDERO WH (CNY-TWD-HKD)	COIN SLOT WH (CNY-TWD-HKD)	1	1	1	1	1					
6	12044496	MONEDERO WH (MAD-DZD-TND)	COIN SLOT WH (MAD-DZD-TND)	1	1	1	1	1					
6	12044489	MONEDERO WH (MYR-SGD-IDR)	COIN SLOT WH (MYR-SGD-IDR)	1	1	1	1	1					
6	12044492	MONEDERO WH (RUB-ROB-CZK)	COIN SLOT WH (RUB-ROB-CZK)	1	1	1	1	1					
6	12044491	MONEDERO WH (TRY-PLN)	COIN SLOT WH (TRY-PLN)	1	1	1	1	1					
6	12044487	MONEDERO WH (USD-MXN-CAD)	COIN SLOT WH (USD-MXN-CAD)	1	1	1	1	1					
6	12044493	MONEDERO WH (VEF-PEN-COP)	COIN SLOT WH (VEF-PEN-COP)	1	1	1	1	1					
S/N	12046624	CABLEADO MONEDERO EMP 500	MONEDERO EMP 500 WIRING	1	1	1	1	1					
	19034820	FAGOR KIT MONEDERO EUR-GBP	FAGOR KIT COIN 2015 EUR-GBP										
	19034827	FAGOR KIT MONEDE. ARS-CLP-BRL	FAGOR KIT COIN 2015 ARS-CLP-BRL										
	19034824	FAGOR KIT MONEDE. AUD-NZD-JPY	FAGOR KIT COIN 2015 AUD-NZD-JPY										
	19034822	FAGOR KIT MONED. CNY-TWD-HKD	FAG. KIT COIN 2015 CNY-TWD-HKD										
	19034829	FAGOR KIT MONED. MAD-DZD-TND	FAGOR KIT COIN 2015 MAD-DZD-TND										
	19034826	FAGOR KIT MONED. MYR-SGD-IDR	FAGOR KIT COIN 2015 MYR-SGD-IDR										
	19034825	FAGOR KIT MONED. RUB-ROB-CZK	FAGOR KIT COIN 2015 RUB-ROB-CZK										
	19034823	FAGOR KIT MONEDERO TRY-PLN	FAGOR KIT COIN 2015 TRY-PLN										
	19034821	FAGOR KIT MONED. USD-MXN-CAD	FAGOR KIT COIN 2015 USD-MXN-CAD										
	19034828	FAGOR KIT MONED. VEF-PEN-COP	FAG. KIT COIN 2015 VEF-PEN-COP										
	19018489	FAGOR KIT MONED. KOR-THL-PHL	FAG. KIT COIN 2015 KOR-THL-PHL										

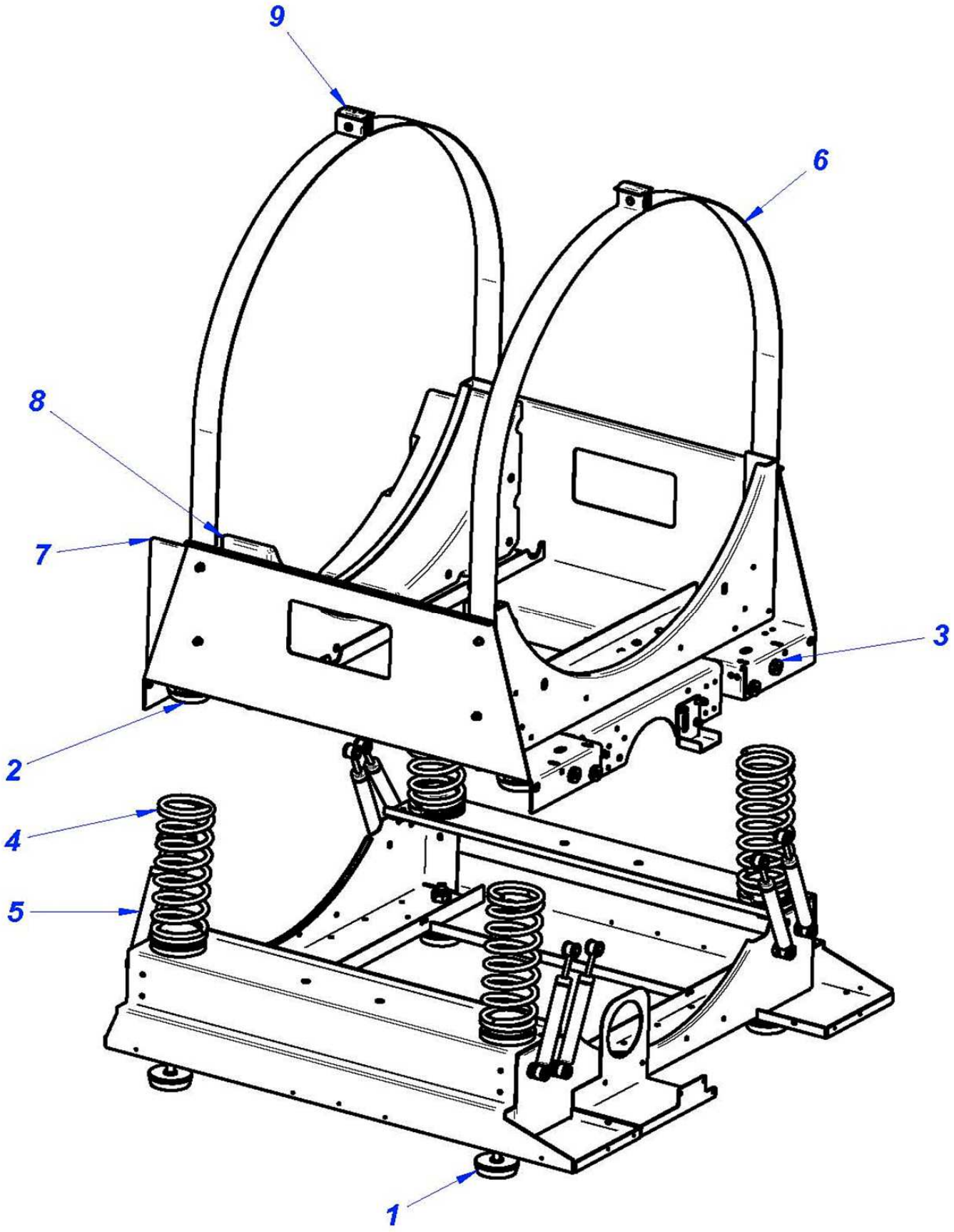

Drawing Nr.	Signature	Date	ARMAZON / FRAME	Sheet
	Iban R.	dic-15	LA-11-14-18-25-35 TP	3

FAGOR

	ARMAZON / FRAME	LÁMINA / DRAWING		FAGOR

ITEM	REFERENCIA REFERENCE	DENOMINACIÓN	DENOMINATION	LA-11 TP	LA-14 TP	LA-18 TP	LA-25 TP	LA-35 TP			RECOMMENDED	ELIMINADO ELIMINATED	INTRODUCIDO INTRODUCED
1	12024963	PATA LAVADORAS	WASHER EXTRACTOR FOOT	4	4	4	4	4					
2	12023345	BASE MUELLE	SPRING BASE	8	8	8	8	8					
3	12023467	CASQUILLO AMORTIGUADORES	DUMPER BUSHING	8	16	16	16	24					
4	12023286	MUELLE 8	SPRING 8	4									
4	12023287	MUELLE 13	SPRING 13		4								
4	12024496	MUELLE 18	SPRING 18			4							
4	12023259	MUELLE 25	SPRING 25				4						
4	12112622	MUELLE 35	SPRING 35					4					
5	12025077	AMORTIGUADOR 120N SUSPA	DAMPER 120N	4		8	8				X		
5	12025078	AMORTIGUADOR 90N SUSPA	DAMPER 90N		8						X		
5	12024980	AMORTIGUADOR 140N SUSPA	DAMPER 140					12			X		
6	12003855	CUNA COMPLETA 10	COMPLETE CRADLE 10	1									
6	12003877	CUNA COMPLETA 13	COMPLETE CRADLE 13		1								
6	12004000	CUNA COMPLETA 18	COMPLETE CRADLE 18			1							
6	12004021	CUNA COMPLETA 25	COMPLETE CRADLE 25				1						
6	12097429	CUNA COMPLETA 35	COMPLETE CRADLE 35					1					
7	12023250	CONTRAPESO 8	COUNTERWEIGH 8	4									
7	12023233	CONTRAPESO 13	COUNTERWEIGH 13		4								
7	12023227	CONTRAPESO DELANTERO 18	FRONT COUNTERWEIGH 18			2							
7	12023207	CONTRAPESO DELANTERO 25	FRONT COUNTERWEIGH 25				2						
7	12098293	CONTRAPESO DELANTERO 35	FRONT COUNTERWEIGH 35					2					
8	12023212	CONTRAPESO POSTERIOR 18	BACK COUNTERWEIGH 18			2							
8	12023203	CONTRAPESO POSTERIOR 25	BACK COUNTERWEIGH 25				2						
8	12098294	CONTRAPESO POSTERIOR 35	BACK COUNTERWEIGH 35					2					
9	12007919	AMARRE ABRAZADERA	CLAMP FASTENING	4	4	4	4	4					

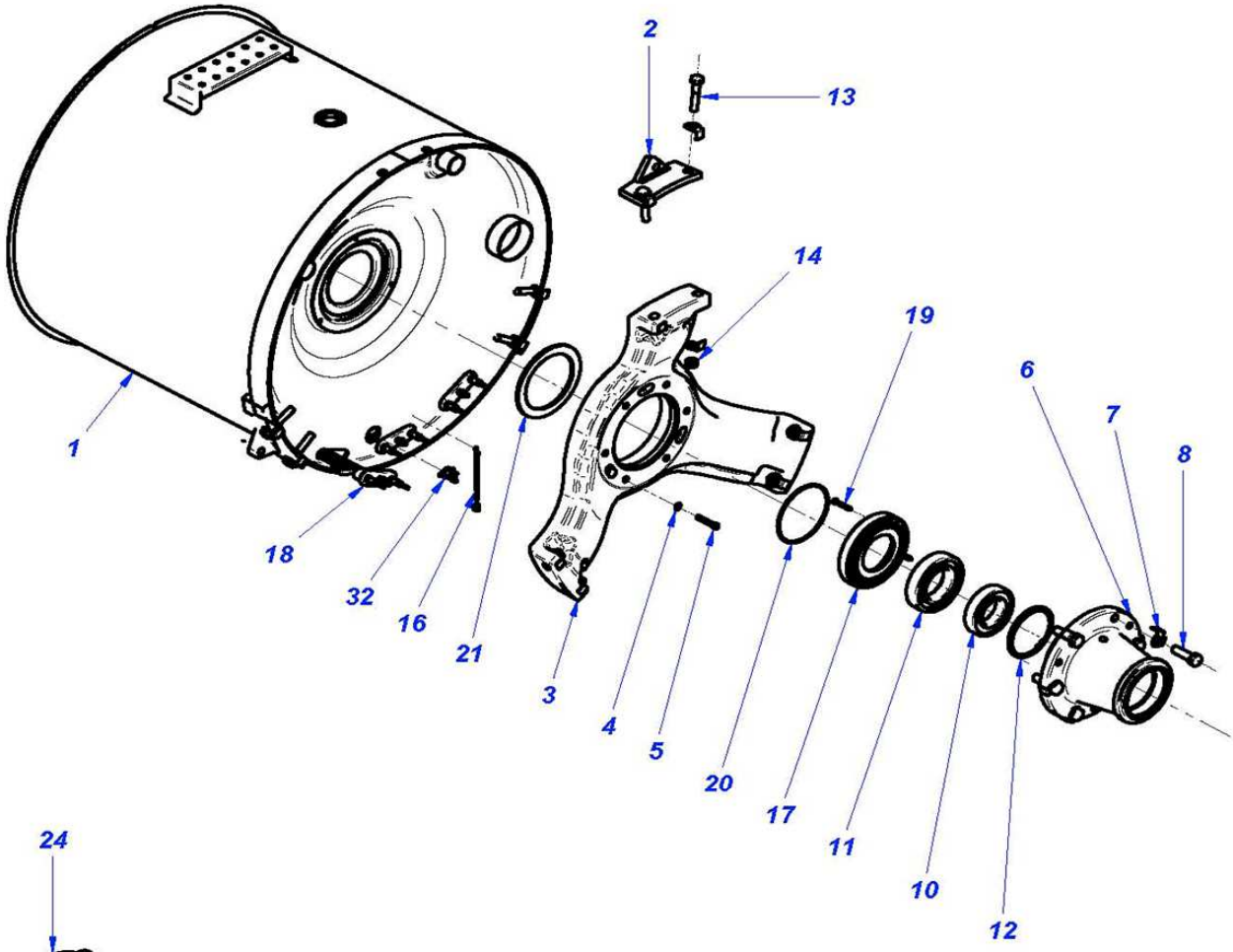

HOT WATER VERSION

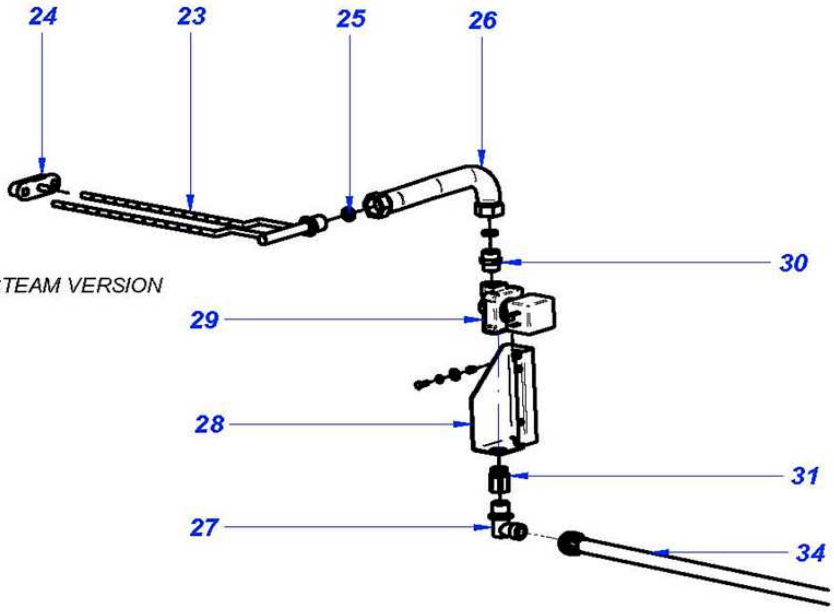

STEAM VERSION

Drawing Nr.	Signature	Date	CUBA / TUB	Sheet
	Iban R.	sep-15	LA-11-14-18-25-35 TP	3

FAGOR

	CUBA / TUB		LÁMINA / DRAWING							FAGOR

ITEM	REFERENCIA REFERENCE	DENOMINACIÓN	DENOMINATION	LA-11 TP	LA-14 TP	LA-18 TP	LA-25 TP	LA-35 TP			RECOMMENDED	ELIMINADO ELIMINATED	INTRODUCIDO INTRODUCED
1	12121090	CUBA COMPLETA	COMPLETE TUB	1									
1	12121068	CUBA COMPLETA	COMPLETE TUB		1								
1	12121182	CUBA COMPLETA	COMPLETE TUB			1							
1	12126191	CUBA COMPLETA	COMPLETE TUB				1						
1	12097297	CUBA COMPLETA	COMPLETE TUB					1					
2	12023348	APOYO TORNILLOS 8	SCREW SUPPORT 8	3									
2	12023329	APOYO TORNILLOS 13	SCREW SUPPORT 13		3								
2	12023317	APOYO TORNILLOS 18	SCREW SUPPORT 18			3							
2	12023327	APOYO TORNILLOS 25	SCREW SUPPORT 25				3						
2	12097420	APOYO TORNILLOS 35	SCREW SUPPORT 35					3					
3	12023200	REFUERZO FONDO CUBA	TUB BASE REINFORCEMENT	1									
3	12023193	REFUERZO FONDO CUBA	TUB BASE REINFORCEMENT		1								
3	12023188	REFUERZO FONDO CUBA	TUB BASE REINFORCEMENT			1							
3	12023187	REFUERZO FONDO CUBA	TUB BASE REINFORCEMENT				1						
3	12046408	REFUERZO FONDO CUBA	TUB BASE REINFORCEMENT					1					
4	12009868	ARANDELA PLANA 6MM DIN125	FLAT WASHER 6MM DIN125	3	3	3	5	5					
5	12010106	TORNILLO DIN 912 M6X35	SCREW DIN 912 M6X35	3	3	3	5	5					
6	12095450	SOPORTE RODAMIENTOS	BEARING SUPPORT	1									
6	12095451	SOPORTE RODAMIENTOS	BEARING SUPPORT		1								
6	12095452	SOPORTE RODAMIENTOS	BEARING SUPPORT			1							
6	12095453	SOPORTE RODAMIENTOS	BEARING SUPPORT				1						
6	12096461	SOPORTE RODAMIENTOS	BEARING SUPPORT					1					
7	12010114	ARAND. SEG. 13 DIN 463	SAFETY WASHER 13 DIN 463	6	6								
7	12010075	ARAND. SEG. 15 DIN 463	SAFETY WASHER 15 DIN 463			6							
7	12010072	ARAND. SEG. 16 DIN 463	SAFETY WASHER 16 DIN 463				10	10					
8	12009880	TORNILLLO M12X40MM DIN933	SCREW M12X40MM DIN933	6									
8	12009902	TORNILLLO M12X55MM DIN931	SCREW M12X55MM DIN931		6								
8	12009931	TORNILLLO M14X70MM DIN931	SCREW M14X70MM DIN931			6	10						
8	12009917	TORNILLLO M16X80MM DIN931	SCREW M16X80MM DIN933					10					
10	12024905	RODAMIENTO 45/85/19	BEARING 45/85/19	1									
10	12024886	RODAMIENTO 6210 DDU	BEARING 6210-2Z		1								
10	12023485	RODAMIENTO 6212-2RS1	BEARING 6212-2RS1			1							
10	12023428	RODAMIENTO 6312-2Z	BEARING 6312-2Z				1						
10	12097296	RODAMIENTO 6316 ZZ (80x170x39)	BEARING 6316 ZZ (80x170x39)					1					
11	12024842	RODAMIENTO 55/100/21	BEARING 55/100/21	1									
11	12023485	RODAMIENTO 6212-2RS1	BEARING 6212-2RS1		1								
11	12023445	RODAMIENTO 6214-2RS1	BEARING 6214-2RS1			1							
11	12023411	RODAMIENTO 6216-2RS1	BEARING 6216-2RS1				1						
11	12097295	RODAMIENTO 6318 DDU (90x190x43)	BEARING 6318 DDU (90x190x43)					1					
12	12009847	ANILLO SEG. INT. 85 DIN-472	LOCKING RING 85 DIN 472	1									
12	12009858	ANILLO SEGURIDAD 90 DIN472	LOCKING RING 90 DIN 472		1								
12	12009802	ANILLO SEGURIDAD J110X4 DIN472	LOCKING RING J110X4 DIN472			1							
12	12009798	ANILLO SEG. INT 130 DIN-472	LOCKING RING 130 DIN-472				1						
12	12124794	ANILLO SEG. INT 170 DIN472-I	LOCKING RING 170 DIN-472					1					
12	12124798	ANILLO SEG. INT 190 DIN472-I	LOCKING RING 190 DIN-472					1					
13	12009902	TORNILLO HEX. M12X55MM DIN931	HEXAG. SCREW M12X55MM DIN931	6									
13	12009887	TORNILLO HEX. M14X50MM DIN931	HEXAG. SCREW M14X50MM DIN931		6								
13	12009814	TORNILLO HEX. M14X70MM DIN933	HEXAG. SCREW M14X70MM DIN933			6	10						
13	12009917	TORNILLO HEX. M16X80MM DIN933	HEXAG. SCREW M16X80MM DIN933					10					
14	12010089	TC AUTOBLOC. FE ZN M14 DIN985	TC AUTOBLOC. FE ZN M14 DIN985	6	6	6	6						
14	12010061	TC AUTOBLOC. FE ZN M16 DIN985	TC AUTOBLOC. FE ZN M16 DIN985					6					
16	12025036	SONDA 64KOHMIO NTC	64KOHM NTC PROBE	1	1	1	1	1			X		
17	12023238	CASQUILLO CONTRA RETEN	COUNTERSEAL BUSHING	1									
17	12023224	CASQUILLO CONTRA RETEN	COUNTERSEAL BUSHING		1								
17	12023213	CASQUILLO CONTRA RETEN	COUNTERSEAL BUSHING			1							
17	12023205	CASQUILLO CONTRA RETEN	COUNTERSEAL BUSHING				1						
17	12097308	CASQUILLO CONTRA RETEN	COUNTERSEAL BUSHING					1					
18	12096226	RESIST. CALENT. 2000W	HEATING RESISTOR 2000W	3							X		
18	12096023	RESIST. CALENT. 3000W	HEATING RESISTOR 3000W		3						X		
18	12096051	RESIST. CALENT. 4000W	HEATING RESISTOR 4000W			3					X		
18	12041359	RESIST. CALENT. 6000W	HEATING RESISTOR 6000W				3				X		
18	12092855	RESIST. CALENT. 7000W	HEATING RESISTOR 7000W					3			X		
19	12010170	TORNILLO INOX M5X30MM DIN912	S. STEEL BOLT M5X30 DIN912	3	3	3	3	5					
20	12009980	JUNTA TORICA 102x3	O-RING 102x3	1									
20	12009940	JUNTA TORICA 114x3	O-RING 114x3		1								
20	12009926	JUNTA TORICA 128x3	O-RING 128x3			1							
20	12010168	JUNTA TORICA 150x3	O-RING 150x3				1						
20	12025230	JUNTA TORICA 200x3	O-RING 200x3					1					

ITEM	REFERENCIA REFERENCE	DENOMINACIÓN	DENOMINATION	LA-11 TP	LA-14 TP	LA-18 TP	LA-25 TP	LA-35 TP			RECOMMENDED	ELIMINADO ELIMINATED	INTRODUCIDO INTRODUCED
21	12025098	JUNTA CASQUILLO RETENES	COUNTERSEAL BUSHING SEAL	1	1								
21	12025083	JUNTA CASQUILLO RETENES	COUNTERSEAL BUSHING SEAL			1							
21	12025015	JUNTA CASQUILLO RETENES	COUNTERSEAL BUSHING SEAL				1						
21	12134295	JUNTA CASQUILLO RETENES	COUNTERSEAL BUSHING SEAL					1					
32	12096597	LIMITADOR DE SEGURIDAD	SAFETY THERMOSTAT	1	1	1	1	1			X		
		SOLO MODELOS VAPOR "S"	**ONLY STEAM MODELS "S"**										
23	12021970	INYECTOR VAPOR 8,13,18	STEAM JET 10,13,18	1	1	1							
23	12021640	INYECTOR VAPOR 25	STEAM JET 25, 35				1	1					
24	12024539	TAPON CIERRE COMPLETO	COMPLETE CLOUSURE CAP	3	3	3	3	3					
24	12024508	CIERRE COMPLETO	COMPLETE CLOUSURE	1	1	1	1	1					
25	12025033	ARANDELA VAPOR 8/13/18	STEAM WASHER 8/13/18	4	4	4	4	4					
26	12023461	LATIGUILLO VAP. 10-13-18 PLANO	STEAM HOSE 10-136-18 FLAT	1	1	1							
26	12023410	LATIGUILLO IZQUIERDO 25 PLANO	LEFT STEAM HOSE 25 FLAT				1	1					
27	12009102	CODO LATON	L-BEND	1	1	1							
27	12023591	CODO M-H 3/4" LATON	L-BEND M-H 3/4"				1	1					
28	12021873	SOPORTE VALVULA DE VAPOR	STEAM VALVE SUPPORT	1	1	1							
28	12021899	SOPORTE VALVULA DE VAPOR 25	STEAM VALVE SUPPORT 25				1	1					
29	12023340	VALVULA VAPOR 1/2 50/60HZ	STEAM VALVE 1/2 50/60HZ	1	1	1					X		
29	12024331	VALVULA VAPOR 3/4" 60HZ.	STEAM VALVE 3/4 60HZ				1	1			X		
30	12008907	MANGUITO DOBLE 1/2	1/2 DOUBLE CONNECTION	1	1	1	1	1					
30	12024396	MANGUITO 3/4	3/4 CONNECTION	1	1	1	1	1					
31	12008219	RACOR 1-2	1-2 CONNECTION	1	1	1	1	1					
34	12024330	MANGUERA VAPOR 10-13-18	STEAM HOSE 10-13-18	1	1	1							
34	12024529	MANGUERA VAPOR 25 PLANA	FLAT STEAM HOSE 25				1	1					

	KIT RODAMIENTOS / BEARING KIT	LÁMINA / DRAWING		FAGOR

ITEM	REFERENCIA REFERENCE	DENOMINACIÓN	DENOMINATION	LA-11 TP	LA-14 TP	LA-18 TP	LA-25 TP	LA-35 TP			RECOMMENDED	ELIMINADO ELIMINATED	INTRODUCIDO INTRODUCED
	12038324	KIT RODAMIENTOS	BEARING KIT	1									
	12038332	KIT RODAMIENTOS	BEARING KIT		1								
	12038336	KIT RODAMIENTOS	BEARING KIT			1							
	12012744	KIT RODAMIENTOS	BEARING KIT				1						
	12132429	KIT RODAMIENTOS	BEARING KIT					1					
	12093440	KIT SOPOPORTE+RODAMIENTOS	SUPPORT+BEARING KIT	1									
	12093442	KIT SOPOPORTE+RODAMIENTOS	SUPPORT+BEARING KIT		1								
	12093443	KIT SOPOPORTE+RODAMIENTOS	SUPPORT+BEARING KIT			1							
	12093446	KIT SOPOPORTE+RODAMIENTOS	SUPPORT+BEARING KIT				1						
	12132430	KIT SOPOPORTE+RODAMIENTOS	SUPPORT+BEARING KIT					1					

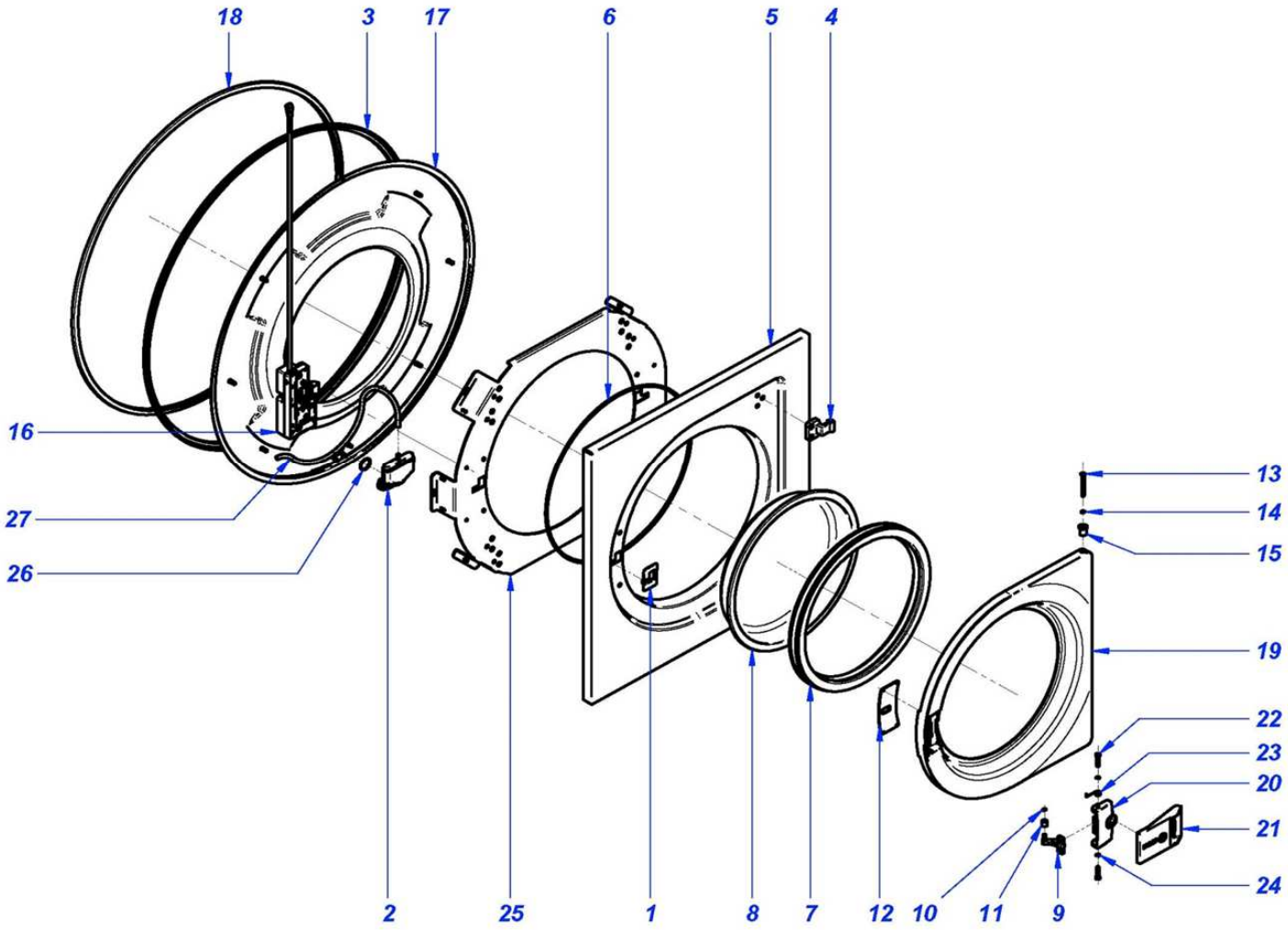

Drawing Nr.	Signature	Date	FRENTE CUBA / TUB FRONT	Sheet
	Iban R.	oct-15	LA-11-14-18-25-35 TP	5

	FRENTE CUBA / TUB FRONT	LÁMINA / DRAWING		FAGOR

ITEM	REFERENCIA REFERENCE	DENOMINACIÓN	DENOMINATION	LA-11 TP	LA-14 TP	LA-18 TP	LA-25 TP	LA-35 TP			RECOMMENDED	ELIMINADO ELIMINATED	INTRODUCIDO INTRODUCED
1	12096278	EMBELLECEDOR CIERRE ADHESIVO	ADHESIVE LOCK TRIM	1	1	1	1	1					
2	12093146	CAMPANA TANQUE	TUB'S PRESSURE CHAMBER	1	1	1	1	1					
3	12023272	JUNTA CUBA	TUB SEAL	1									
3	12023268	JUNTA CUBA	TUB SEAL		1								
3	12023260	JUNTA CUBA	TUB SEAL			1							
3	12023255	JUNTA CUBA	TUB SEAL				1						
3	12049084	JUNTA CUBA	TUB SEAL					1					
4	12123602	BISAGRA PUERTA REDONDA	ROUNDED DOOR HINGE	2	2	2	2						
4	12046248	BISAGRA PUERTA V2	DOOR HINGE V2					2					
5	12121188	FONDO PUERTA	DOOR BASE	1									
5	12120457	FONDO PUERTA	DOOR BASE		1	1	1						
5	12113049	FONDO PUERTA	DOOR BASE					1					
6	11000068	PERFIL GOMA GRIS EN U 12*6	GREY RUBBER PROFILE U12*6	2	2	2	2	2					
7	12007767	JUNTA PUERTA	DOOR SEAL	1							X		
7	12023284	JUNTA PUERTA	DOOR SEAL		1	1	1				X		
7	12048069	JUNTA PUERTA	DOOR SEAL					1			X		
8	12024250	MIRILLA PUERTA	DOOR WINDOW	1									
8	12024758	MIRILLA PUERTA	DOOR WINDOW		1	1	1						
8	12048068	MIRILLA PUERTA	DOOR WINDOW					1					
9	12023347	GANCHO REGULABLE CIERRE	REGULABLE LOCK HOOK	1	1	1	1	1					
10	12010155	ANILLO SEG. A6 DIN471	LOCKING RING A6 DIN471	1	1	1	1	1					
11	12025215	CASQUILLO PUERTA	DOOR BUSHING	1	1	1	1	1					
12	12122943	TAPA MANETA	LID CLOSURE	1									
12	12122308	TAPA MANETA	LID CLOSURE		1	1	1						
12	12048900	TAPA MANETA	LID CLOSURE					1					
13	12025202	PASADOR PUERTA	DOOR PIN	2	2	2	2						
13	12048691	PASADOR LN-35 D10x55	DOOR PIN LN-35 D10x55					2					
14	12010103	ARANDELA SEG. 4MM DIN6799	LOCK WASHER 4MM DIN6799	2	2	2	2						
14	12010074	ARANDELA SEG. 7MM DIN6799	LOCK WASHER 7MM DIN6799					2					
15	12048628	COJINETE SELF-OIL	SELF-OIL BUSHING					2					
16	12119770	CIERRE COMPLETO 2015	COMPLETE LOCK 2015	1	1	1	1	1			X		
17	12119919	FRENTE CUBA COMPLETA	COMPLETE TUB FRONT	1									
17	12121232	FRENTE CUBA COMPLETA	COMPLETE TUB FRONT		1								
17	12121433	FRENTE CUBA COMPLETA	COMPLETE TUB FRONT			1							
17	12121443	FRENTE CUBA COMPLETA	COMPLETE TUB FRONT				1						
17	12138636	FRENTE CUBA COMPLETA	COMPLETE TUB FRONT					1					
18	12022642	CIERRE CUBA COMPLETA	COMPLETE TUB ENCLOSURE	1									
18	12023103	CIERRE CUBA COMPLETA	COMPLETE TUB ENCLOSURE		1								
18	12023108	CIERRE CUBA COMPLETA	COMPLETE TUB ENCLOSURE			1							
18	12023105	CIERRE CUBA COMPLETA	COMPLETE TUB ENCLOSURE				1						
18	12049772	CIERRE CUBA COMPLETA	COMPLETE TUB ENCLOSURE					1					
19	12007727	PUERTA FAGOR 2010 13,18,25	FAGOR DOOR 2010 13, 18, 25	1									
19	12007725	PUERTA FAGOR 2010 13,18,25	FAGOR DOOR 2010 13, 18, 25		1	1	1						
19	12049408	PUERTA FAGOR 2010 35	FAGOR DOOR 35					1					
20	12010370	MANETA PUERTA FAGOR	DOOR HANDLE FAGOR	1	1	1	1	1					
21	12000752	POMO FAGOR 2010	KNOB FAGOR 2010	1	1	1	1	1					
22	12016778	PASADOR CIERRE	LOCK PIN	2	2	2	2	2					
23	12023383	MUELLE CIERRE	LOCK SPRING	1	1	1	1	1					
24	12010103	ARANDELA SEG. 4MM DIN6799	LOCK WASHER 4MM DIN6799	2	2	2	2	2					
25	12132446	REP CALZO PUERTA	DOOR PROP	1									
25	12131545	REP CALZO PUERTA	DOOR PROP		1	1	1						
25	12132447	REP CALZO PUERTA	DOOR PROP					1					
26	12093145	JUNTA TORICA CAMPANA D25x3,5	O-RING D25x3,5	1	1	1	1	1					
27	11000066	TUBO GOMA NEGRO Ø 8x4	BLACK RUBBER HOSE Ø 8x4	3	3	3	3	3					

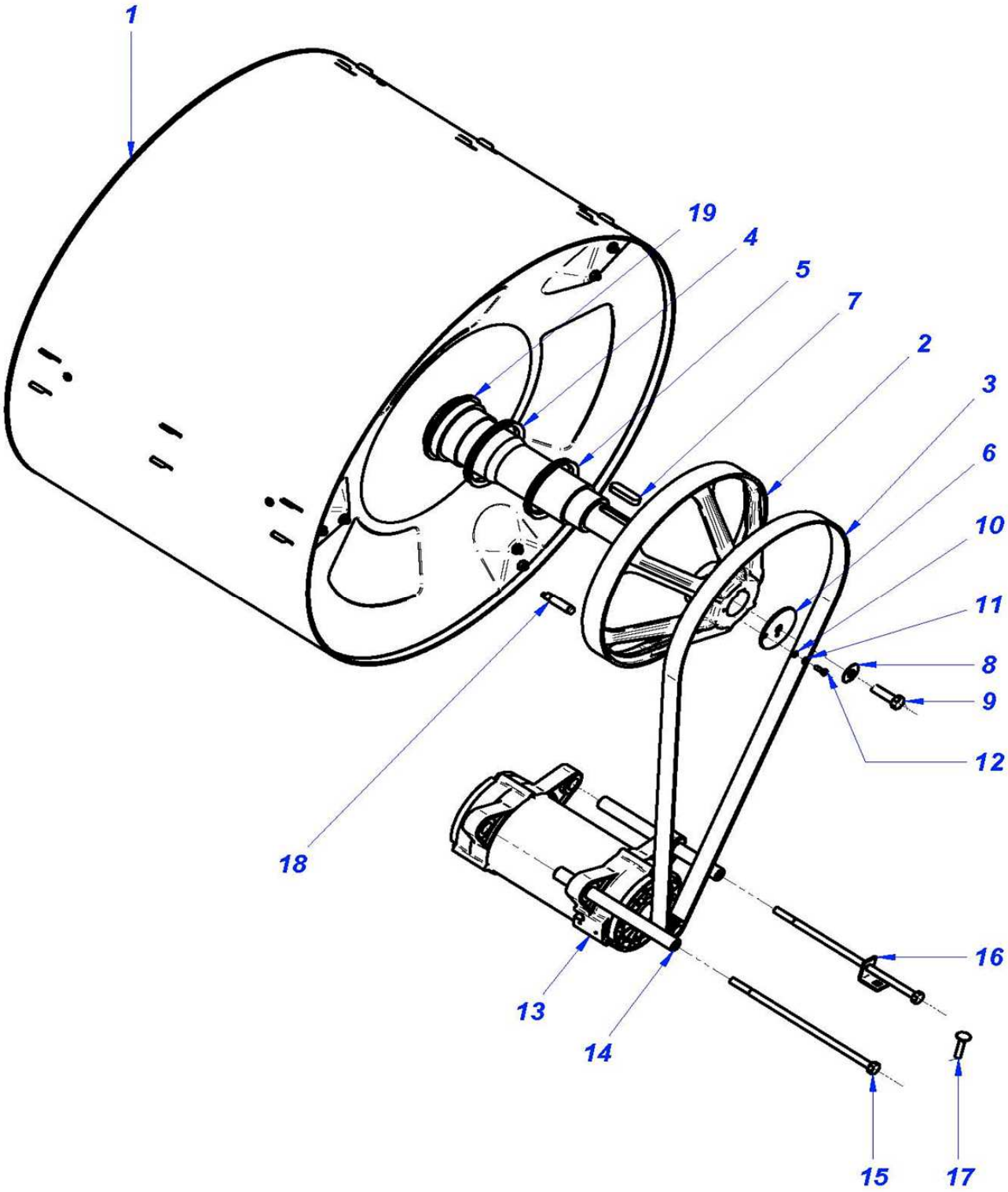

Drawing Nr.	Signature	Date	TAMBOR / DRUM	Sheet
	Iban R.	oct-15	LA-11-14-18-25-35 TP	6

FAGOR

	TAMBOR / DRUM		LÁMINA / DRAWING							FAGOR		
ITEM	REFERENCIA REFERENCE	DENOMINACIÓN	DENOMINATION	LA-11 TP	LA-14 TP	LA-18 TP	LA-25 TP	LA-35 TP			RECOMMENDED	ELIMINADO ELIMINATED	INTRODUCIDO INTRODUCED
1	12004082	TAMBOR COMPLETO	COMPLETE DRUM	1									
1	12004087	TAMBOR COMPLETO	COMPLETE DRUM		1								
1	12004100	TAMBOR COMPLETO	COMPLETE DRUM			1							
1	12004126	TAMBOR COMPLETO	COMPLETE DRUM				1						
1	12097273	TAMBOR COMPLETO	COMPLETE DRUM					1					
2	12023279	POLEA TAMBOR	DRUM PULLEY	1									
2	12024919	POLEA TAMBOR	DRUM PULLEY		1	1							
2	12023249	POLEA TAMBOR	DRUM PULLEY				1						
2	12097389	POLEA TAMBOR	DRUM PULLEY					1					
3	12023273	CORREA POLY-V PJ 1301 (8 DIENTES)	BELT POLY-V PJ 1301 (8 TEETH)	1							X		
3	12023269	CORREA POLY-V PJ 1600 (8 DIENTES)	BELT POLY-V PJ 1600 (8 TEETH)		1						X		
3	12023267	CORREA POLY-V PJ 1663 (8 DIENTES)	BELT POLY-V PJ 1663 (8 TEETH)			1					X		
3	12023252	CORREA POLY-V PJ 1854 (12 DIENT.)	BELT POLY-V PJ 1854 (12 TEETH)				1				X		
3	12104292	CORREA POLY-V PJ 2083 (12 DIENT.)	BELT POLY-V PJ 2083 (12 TEETH)					1			X		
4	12025038	RETEN V-RING VA-80 VITON	V-RING RETAINER VA-80 VITON	1									
4	12024987	RETEN V-RING VA-85 VITON	V-RING RETAINER VA-85 VITON		1								
4	12024988	RETEN V-RING VA-95 VITON	V-RING RETAINER VA-95 VITON			1							
4	12024993	RETEN V-RING VA-100 VITON	V-RING RETAINER VA-100 VITON				1						
4	12046264	RETEN VA-110 VITON	V-RING RETAINER VA-110 VITON					1					
5	12025226	RETEN V-RING 65 NBR	V-RING RETAINER 65A NBR	1									
5	12025221	RETEN V-RING VA-70 NBR	V-RING RETAINER VA-70 VITON		1								
5	12025038	RETEN V-RING VA-80 VITON	V-RING RETAINER VA-80 VITON			1							
5	12024992	RETEN V-RING VA 90	V-RING RETAINER VA-90 VITON				1						
5	12024993	RETEN V-RING VA-100 VITON	V-RING RETAINER VA-100 VITON					1					
6	12021847	ARANDELA POLEA MOTOR	ENGINE PULLEY WASHER	1									
6	12021832	ARANDELA POLEA MOTOR	ENGINE PULLEY WASHER		1	1	1						
6	12103750	ARANDELA POLEA MOTOR	ENGINE PULLEY WASHER					1					
7	12025234	CHAVETA 12x8x40 DIN 6885	COTTER PIN 12x8x40 DIN 6885	1									
7	12025213	CHAVETA TIPO A 14x9x50 DIN 6885	COTTER PIN 14x9x50 DIN 6885 A		1	1	1						
7	12115159	CHAVETA 20x12x63 DIN6885 TIPO A	COTTER PIN 20x12x63 DIN 6885 A					1					
8	12009896	ARANDELA SEG. FE ZN 12MM DIN432	SAFETY WASHER FE ZN 12MM DIN432	1	1	1	1	1					
9	12010069	TORNILLO FE ZN M12X40MM DIN933	SCREW FE ZN M12X40MM DIN933	1	1	1	1	1					
13	12023197	MOTOR 230V AC 3N 750W 2800RPM	ENGINE 230V AC 3N 750W 2800RPM	1							X		
13	12023195	MOTOR 230V AC 3N 1100W 2800RPM	ENGINE 230V AC 3N 1100W 2800RPM		1						X		
13	12023194	MOTOR 230V AC 3N 2200W 2800RPM	ENGINE 230V AC 3N 2200W 2800RPM			1					X		
13	12023189	MOTOR 230V AC 3N 3KW 2800RPM	ENGINE 230V AC 3N 3KW 2800RPM				1				X		
13	12046405	MOTOR 230V AC 3N 4KW 1500RPM	ENGINE 230V AC 4N 3KW 1500RPM					1			X		
14	12023322	TUBO SOPORTE MOTOR	ENGINE SUPPORT HOSE	2									
14	12023319	TUBO SOPORTE MOTOR	ENGINE SUPPORT HOSE		2								
14	12023310	TUBO SOPORTE MOTOR	ENGINE SUPPORT HOSE			2							
14	12023307	TUBO SOPORTE MOTOR	ENGINE SUPPORT HOSE				2	2					
15	12009921	TORNILLO FE ZN M10X150MM DIN931	SCREW FE ZN M10X150MM DIN931	2									
15	12009900	TORNILLO FE ZN M10X180MM DIN931	SCREW FE ZN M10X180MM DIN931		2			2					
15	12009818	TORNILLO FE PV M10X220MM DIN931	SCREW FE PV M10X220MM DIN931			2	2						
16	12023118	TENSOR MOTOR	ENGINE TENSOR	1	1	1	1	1					
17	12010045	TORN DIN 603 M8x35 ZINC	SCREW DIN 603 M8x35 ZN	1	1	1	1	1					
18	12114100	SENSOR MAGNTICO 12V	MAGNETIC SENSOR 12V	1	1	1	1	1			X		
19	12007773	CASQUILLO EJE	AXIS BUSHING	1									
19	12023262	CASQUILLO EJE	AXIS BUSHING		1								
19	12023256	CASQUILLO EJE	AXIS BUSHING			1							
19	12007749	CASQUILLO EJE	AXIS BUSHING				1						
19	12097355	CASQUILLO EJE	AXIS BUSHING					1					

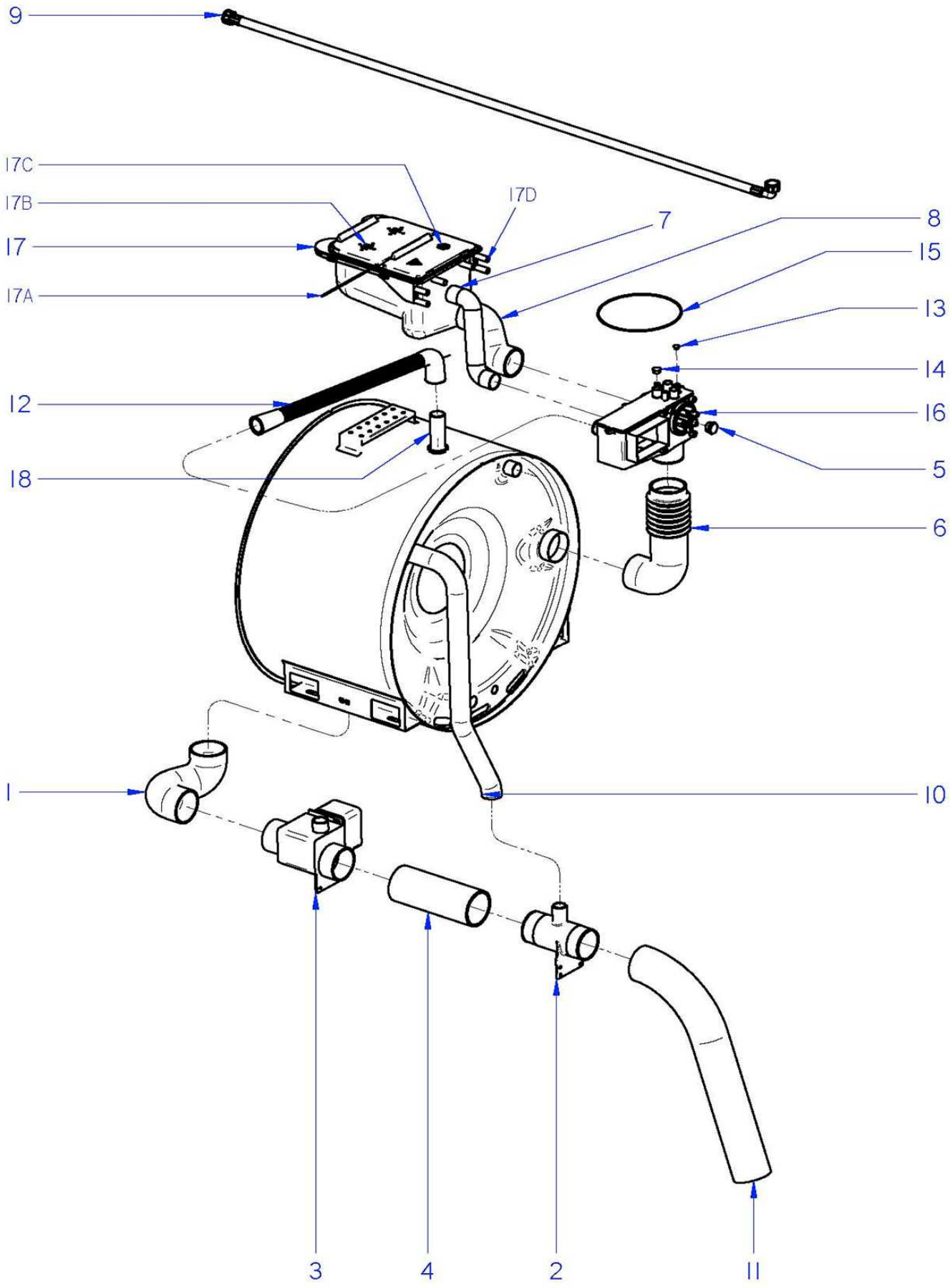

Drawing Nr.	Signature	Date	CUBETERA / TRAY	Sheet
	Iban R.	sep-15	LA-11 TP	7

FAGOR

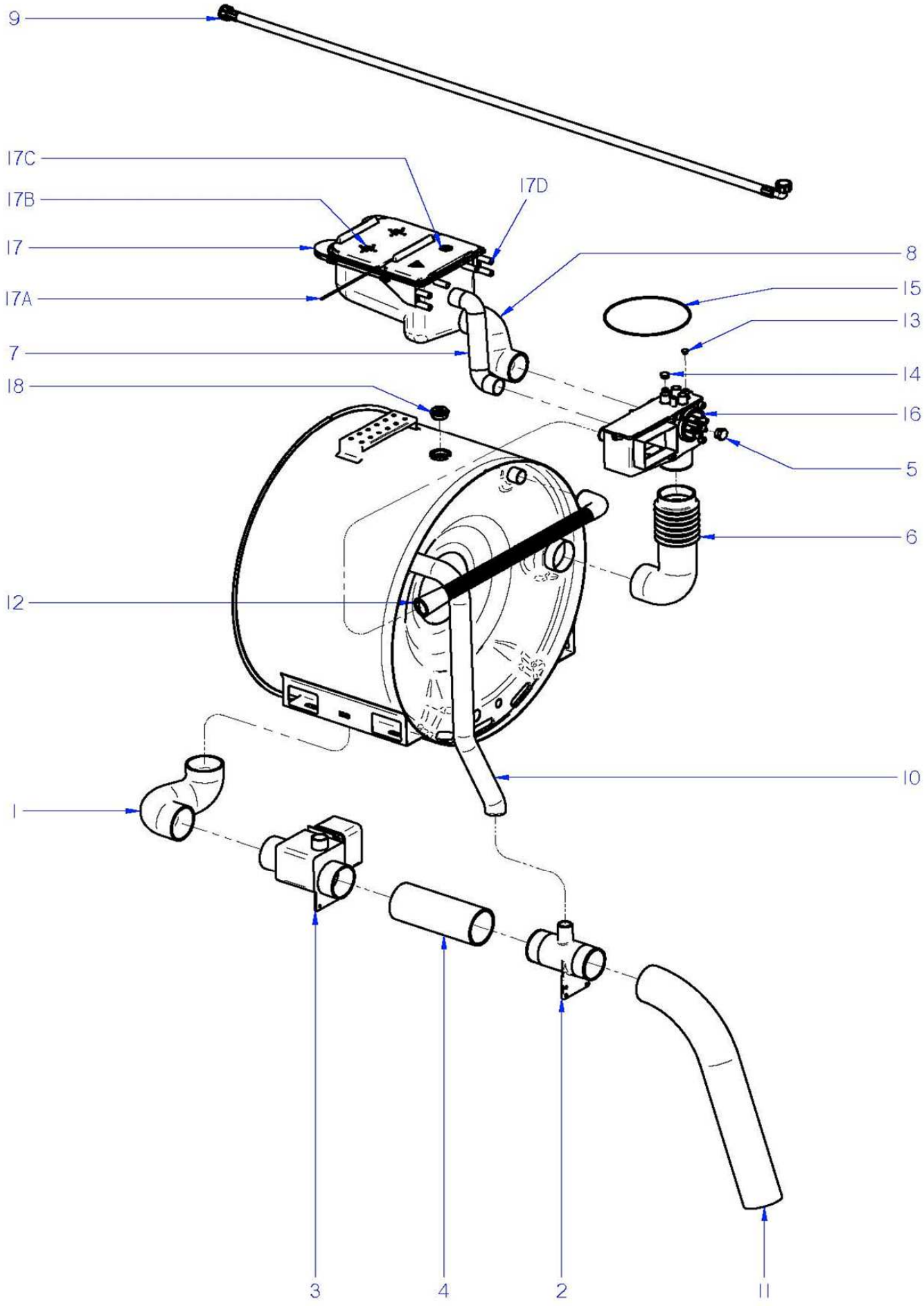

Drawing Nr.	Signature	Date	CUBETERA / TRAY	Sheet
	Iban R.	sep-15	LA-14-18-25-35 TP	8

FAGOR

	CUBETERA / TRAY	LÁMINA / DRAWING		FAGOR

ITEM	REFERENCIA REFERENCE	DENOMINACIÓN	DENOMINATION	LA-11 TP	LA-14 TP	LA-18 TP	LA-25 TP	LA-35 TP			RECOMMENDED	ELIMINADO ELIMINATED	INTRODUCIDO INTRODUCED
1	12044165	CONDUCTO DESAGÜE CUBA	TUB DRAINAGE PIPE	1	1	1							
1	12025016	CONDUCTO DESAGÜE CUBA	TUB DRAINAGE PIPE				1						
1	12007746	CONDUCTO DESAGÜE CUBA	TUB DRAINAGE PIPE					1					
2	12046868	SALIDA DESAGÜE 3"	DRAINAGE OUTPUT 3"	1	1	1	1	1					
3	12024404	VALVULA VACIADO	DRAINAGE VALVE	1	1	1	1	1			X		
4	12046143	CONDUCTO VALVULA-SALIDA	DRAIN VALVE-OUTPUT PIPE	1	1								
4	12046139	CONDUCTO VALVULA-SALIDA	DRAIN VALVE-OUTPUT PIPE			1							
4	12046144	CONDUCTO VALVULA-SALIDA	DRAIN VALVE-OUTPUT PIPE				1	1					
5	12121485	CAPUCHON CON ROSCA SR1126	THREADED CAP SR1126	1	1	1	1	1					
6	12023263	CONDUCTO COLECTOR-CUBA	COLLECTOR BOX-TUP PIPE	1									
6	12025016	CONDUCTO COLECTOR-CUBA	COLLECTOR BOX-TUP PIPE		1								
6	12025017	CONDUCTO COLECTOR-CUBA	COLLECTOR BOX-TUP PIPE			1	1	1					
7	12007856	COND. REBOSADERO CUBETERA	TRAY OVERFLOW PIPE	1	1								
7	12007839	COND. REBOSADERO CUBETERA	TRAY OVERFLOW PIPE			1							
7	12007825	COND. REBOSADERO CUBETERA	TRAY OVERFLOW PIPE				1						
7	12007811	COND. REBOSADERO CUBETERA	TRAY OVERFLOW PIPE					1					
8	12007772	CONDUCTO CUBETERA	TRAY PIPE	1	1								
8	12007776	CONDUCTO CUBETERA	TRAY PIPE			1							
8	12007763	CONDUCTO CUBETERA	TRAY PIPE				1						
8	12007756	CONDUCTO CUBETERA	TRAY PIPE					1					
9	12024115	MANGUERA ENTRADA AGUA	WATER INLET PIPE	1	1	1	1	1					
10	12023265	CONDUCTO REBOSADERO CUBA	TUB OVERFLOW PIPE	1									
10	12023271	CONDUCTO REBOSADERO CUBA	TUB OVERFLOW PIPE		1								
10	12024866	CONDUCTO REBOSADERO CUBA	TUB OVERFLOW PIPE			1							
10	12024833	CONDUCTO REBOSADERO CUBA	TUB OVERFLOW PIPE				1	1					
11	12025026	CONDUCTO DESAGÜE	DRAINAGE PIPE	1	1	1	1	1					
12	12007821	MANGUERA SALIDA VAPOR	STEAM OUTPUT HOSE	1	1	1	1	1					
13	12010034	TAPON CAJA COLECTOR 8	COLLECTOR BOX PLUG 8	3	3	3	3	3					
14	12010013	TAPON CAJA COLECTOR 16	COLLECTOR BOX PLUG 16	1	1	1	1	1					
15	12008049	JUNTA TAPA CAJA COLECTOR	COLLECTOR BOX COVER SEAL	1	1	1	1	1					
16	12129972	CAJA COLECTOR COMPLETA	COMPLETE COLLECTOR BOX	1	1	1	1	1					
17	12007752	CUBETA DE DETERGENTES	DETERGENTS TRAY	1	1	1	1	1					
17A	12010483	EJE TAPAS CUBETA	TRAY COVERS AXIS	2	2	2	2	2					
17B	12010403	TAPA 1	COVER 1	1	1	1	1	1					
17C	12000747	TAPA 2	COVER 2	1	1	1	1	1					
17D	12010088	TAPON CUBETA DETERGENTES	DETERGENT TRAY CAP	2	2	2	2	2					
18	12120434	TUBO SALIDA VAPOR	STEAM OUTPUT TUBE	1									
18	12128218	TAPON CUBA 1" G	TUB CAP 1" G		1	1	1	1					

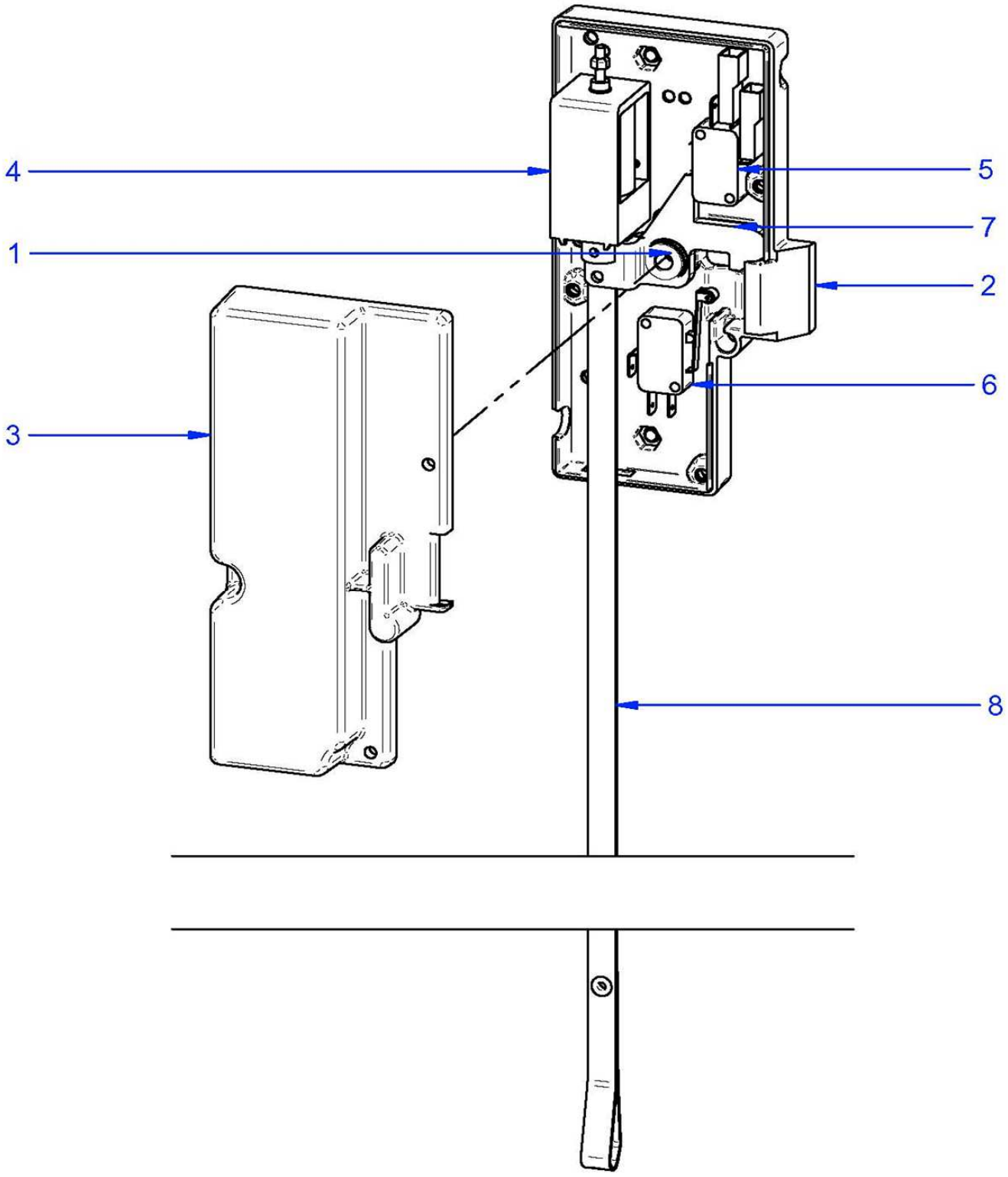

Drawing Nr.	Signature	Date	CIERRE / LOCK	Sheet
	Iban R.	sep-15	LA-11-14-18-25-35 TP	9

FAGOR

	CIERRE / LOCK		LÁMINA / DRAWING		FAGOR

ITEM	REFERENCIA REFERENCE	DENOMINACIÓN	DENOMINATION	LA-11 TP	LA-14 TP	LA-18 TP	LA-25 TP	LA-35 TP			RECOMMENDED	ELIMINADO ELIMINATED	INTRODUCIDO INTRODUCED
	12119770	CIERRE COMPLETO 2015	COMPLETE LOCK 2015	1	1	1	1	1					
1	12119718	SELFOIL 6x10x10 VALONA	SELFOIL 6x10x10 VALONA	1	1	1	1	1					
2	12118270	BASE CIERRE 2015	LOCK BASE 2015	1	1	1	1	1					
3	12118278	TAPA CIERRE 2015	LOCK COVER 2015	1	1	1	1	1					
4	12119697	ELECTROIMAN ERB35 (NAFSA)	ELECTROMAGNET ERB35	1	1	1	1	1					
5	12025193	INTERRUPTOR PUERTA	DOOR SWITCH	1	1	1	1	1					
6	12119927	INTERRUPTOR BLOQUEO (V-16-1C5)	BLOCKING SWITCH (V-16-1C5)	1	1	1	1	1					
7	12118307	BLOQUEO CIERRE 2015	LOCK BLOCKING 2015	1	1	1	1	1					
8	12023332	TIRADOR PUERTA	DOOR PULL	1	1	1	1	1					

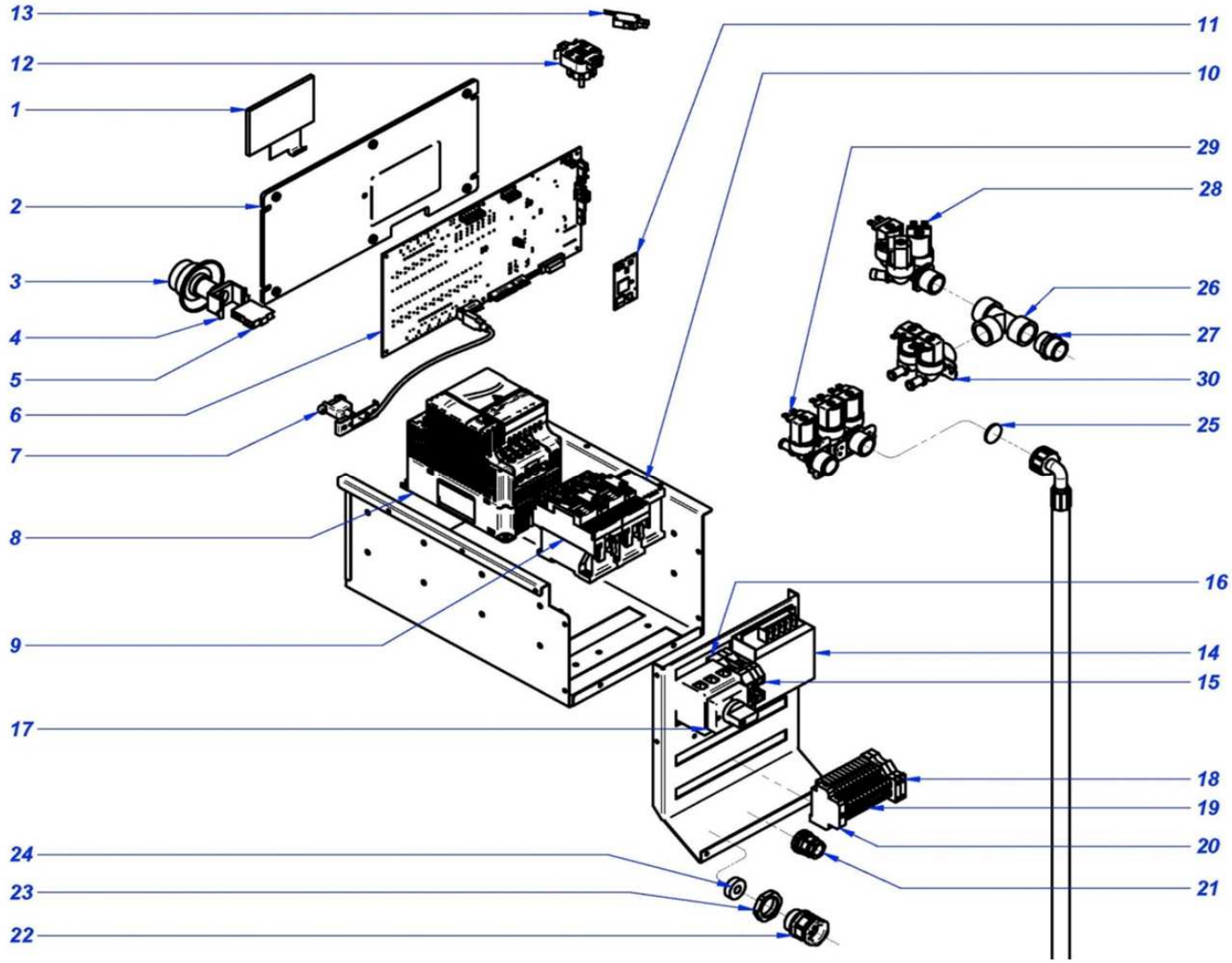

Drawing Nr.	Signature	Date	CUADRO ELECTRICO / ELECTRIC BOARD	Sheet
	Iban R.	dic-15	LAVADORAS LA-11-14-18 TP	12

FAGOR

	CUADRO ELECTRICO / ELECTRIC BOARD	LÁMINA / DRAWING		FAGOR

ITEM	REFERENCIA REFERENCE	DENOMINACIÓN	DENOMINATION	LA-11 TP	LA-14 TP	LA-18 TP					RECOMMENDED	ELIMINADO ELIMINATED	INTRODUCIDO INTRODUCED
1	12119488	DISPLAY TOUCH PLUS	DISPLAY TOUCH PLUS	1	1	1					X		
2	12116834	SOPORTE MAIN BOARD	SOPORTE MAIN BOARD SUPPORT	1	1	1							
3	12120235	SETA DE EMERGENCIA	EMERGENCY STOP BUTTON	1	1	1					X		
4	12120238	SOPORTE SETA EMERGENCIA	EMERGENCY STOP SUPPORT	1	1	1					X		
5	12120237	PULSAD. 250V AC 16A 1VIA 2POS UL	250V AC 16A 1WAY 2POS UL SWITCH	1	1	1					X		
6	12120815	TARJETA PRINCIPAL TP (LIGHT)	MAIN BOARD TP (LIGHT)	1	1	1					X		
7	12133373	CABLE USB MACHO-HEMBRA	USB WIRE MALE-FEMALE	1	1	1					X		
8	12134029	VARIADOR DELTA PROGRAMADO	PROGRAMMED DELTA INVERTER	1							X		
8	12134031	VARIADOR DELTA PROGRAMADO	PROGRAMMED DELTA INVERTER		1						X		
8	12134047	VARIADOR DELTA PROGRAMADO	PROGRAMMED DELTA INVERTER			1					X		
9	12111795	CONTACTOR 230V AC 20A 4via UL	230V AC 20A 4via UL CONTACTOR	2	2	2					X		
10	12023706	RELE 230V AC 50/60HZ 16A 2VIA	RELAY 230V AC 50/60HZ 16A 2WAY	1	1	1					X		
11	12131303	MODULO PROCESADOR GRABADO	RECORDED PROCESSOR MODULE	1	1	1					X		
12	12128262	SENSOR DE PRESION 50mbar	50mbar PRESSURE SENSOR	1	1	1					X		
13	12024696	MICRORRUPTOR PUERTA	DOOR MICROSWITCH	1	1	1							
14	12116823	TRANSFORMADOR 1N 50W 240V/12V	1N 50W 240V/12V UL TRANSFORMER	1	1	1					X		
15	12024515	BORNA TIERRA 35MM	GROUND CONNECTOR 35MM	1	1	1							
16	12025143	BORNA NEUTRA AZUL 35MM2 1vía UL	BLUE NEUTRAL CONNECTOR 35MM2	1	1	1							
17	12024628	INTERRUP. 63A 3VIA 2POS SECCI UL	63A 3WAY 2POS ISOLATOR SWITCH	1	1	1					X		
18	12025158	BORNA PORTAFUSIBLE 6,3A 1 VIA	FUSE HOLDER CONNECTOR 6,3A	2	2	2							
19	12025180	REGLETA 2 PISOS 24A 2,50MM2 UL	24A 2,5MM2 UL TERMINAL BLOCK	12	12	12							
20	12024199	TOPE FINAL	END STOP	1	1	1							
21	12009966	PRENSA ESTOPA DOSIFICACION	DISPENSER STUFFING BOX	1	1	1							
22	12009927	PRENSA ESTOPA PG-21	STUFFING BOX PG-21	1	1	1							
23	12009764	TUERCA ROSCA Pg 21	SCREW THREAD Pg 21	1	1	1							
24	12009994	JUNTA GOMA (GAES)	RUBBER SEAL	1	1	1							
25	12025278	FILTRO DE JUNTA N-3	JOINT FILTER N-3	2	2	2							
26	12024996	Te A 90º 3/4	T at 90º 3/4	1	1	1							
27	12024396	MANGUITO 3/4"	3/4" CONNECTION	1	1	1							
28	12023921	ELECTROVALVULA 3 VIAS	3 WAY SOLENOID VALVE	1	1	1					X		
29	12025161	ELECTROVALVULA SIMPLE	SIMPLE SOLENOID VALVE	1	1	1					X		
30	12023794	ELECTROVALVULA 2 VIAS	2 WAY SOLENOID VALVE	2	2	2					X		

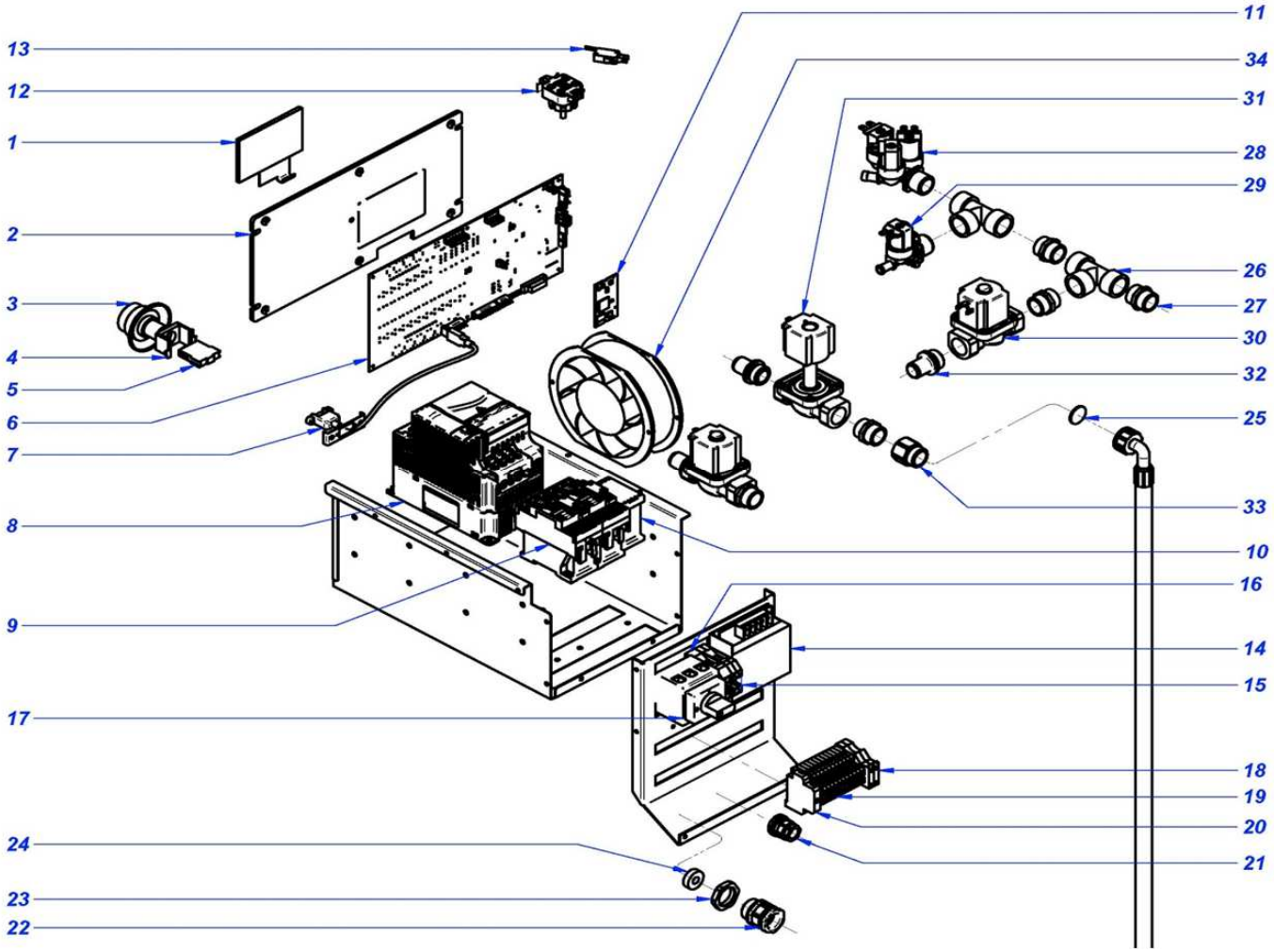

Drawing Nr.	Signature	Date	CUADRO ELECTRICO / ELECTRIC BOARD	Sheet
	Iban R.	jul-16	LAVADORAS LA-25-35 TP	12

FAGOR

	CUADRO ELECTRICO / ELECTRIC BOARD		LÁMINA / DRAWING		FAGOR

ITEM	REFERENCIA REFERENCE	DENOMINACIÓN	DENOMINATION	LA-25 TP	LA-35 TP						RECOMMENDED	ELIMINADO ELIMINATED	INTRODUCIDO INTRODUCED
1	12119488	DISPLAY TOUCH PLUS	DISPLAY TOUCH PLUS	1	1						X		
2	12116834	SOPORTE MAIN BOARD	SOPORTE MAIN BOARD SUPPORT	1	1								
3	12120235	SETA DE EMERGENCIA	EMERGENCY STOP BUTTON	1	1						X		
4	12120238	SOPORTE SETA EMERGENCIA	EMERGENCY STOP SUPPORT	1	1						X		
5	12120237	PULSAD. 250V AC 16A 1VIA 2POS UL	250V AC 16A 1WAY 2POS UL SWITCH	1	1						X		
6	12120815	TARJETA PRINCIPAL TP (LIGHT)	MAIN BOARD TP (LIGHT)	1	1						X		
7	12133373	CABLE USB MACHO-HEMBRA	USB WIRE MALE-FEMALE	1	1						X		
8	12131875	VARIADOR DELTA PROGRAMADO	PROGRAMMED DELTA INVERTER	1							X		
8	12131879	VARIADOR DELTA PROG. (460V)	PROG. DELTA INVERTER (460V)		1						X		
8	12134048	VARIADOR DELTA PROG. (230V)	PROG. DELTA INVERTER (230V)		1						X		
9	12041014	CONTACTOR 230V AC 40A 4via UL	230V AC 40A 4via UL CONTACTOR	2	2						X		
10	12023706	RELE 230V AC 50/60HZ 16A 2VIA	RELAY 230V AC 50/60HZ 16A 2WAY	1							X		
10	12024040	CONTACTOR 230V AC 20A 4via UL	230V AC 20A 4via UL CONTACTOR		1						X		
11	12131303	MODULO PROCESADOR GRABADO	RECORDED PROCESSOR MODULE	1	1						X		
12	12128262	SENSOR DE PRESION 50mbar	50mbar PRESSURE SENSOR	1	1						X		
13	12024696	MICRORRUPTOR PUERTA	DOOR MICROSWITCH	1	1								
14	12116823	TRANSFORMADOR 1N 50W 240V/12V	1N 50W 240V/12V UL TRANSFORMER	1	1						X		
15	12024515	BORNA TIERRA 35MM	GROUND CONNECTOR 35MM	1	1								
16	12025143	BORNA NEUTRA AZUL 35MM2 1vía UL	BLUE NEUTRAL CONNECTOR 35MM2	1	1								
17	12024628	INTERRUP. 63A 3VIA 2POS SECCI UL	63A 3WAY 2POS ISOLATOR SWITCH	1	1						X		
18	12025158	BORNA PORTAFUSIBLE 6,3A 1 VIA	FUSE HOLDER CONNECTOR 6,3A	2	2								
19	12025180	REGLETA 2 PISOS 24A 2,50MM2 UL	24A 2,5MM2 UL TERMINAL BLOCK	12	12								
20	12024199	TOPE FINAL	END STOP	1	1								
21	12009966	PRENSA ESTOPA DOSIFICACION	DISPENSER STUFFING BOX	1	1								
22	12009927	PRENSA ESTOPA PG-21	STUFFING BOX PG-21	1	1								
23	12009764	TUERCA ROSCA Pg 21	SCREW THREAD Pg 21	1	1								
24	12009994	JUNTA GOMA (GAES)	RUBBER SEAL	1	1								
25	12025278	FILTRO DE JUNTA N-3	JOINT FILTER N-3	2	2								
26	12024996	Te A 90º 3/4	T at 90º 3/4	2	2								
27	12024396	MANGUITO 3/4"	3/4" CONNECTION	5	5								
28	12023921	ELECTROVALVULA 3 VIAS	3 WAY SOLENOID VALVE	1	1						X		
29	12025161	ELECTROVALVULA SIMPLE	SIMPLE SOLENOID VALVE	1	1						X		
30	12023551	ELECTROVALVULA SIMPLE	SIMPLE SOLENOID VALVE	3	3						X		
31	12024622	BOBINADO EV SIMPLE	SIMPLE SOLENOID VALVE COIL	3	3						X		
32	12024526	EMPALME	FITTING	3	3								
33	12025062	RACOR PORTA FILTRO 3/4	RACOR FILTER HOLDER 3/4	1	1								
34	12024106	VENTILADOR 230V AC 1N 36KW	FAN 230V AC 1N 36KW		1						X		

	VARIOS / VARIOUS	LÁMINA / DRAWING		FAGOR

ITEM	REFERENCIA REFERENCE	DENOMINACIÓN	DENOMINATION	LA-11 TP	LA-14 TP	LA-18 TP	LA-25 TP	LA-35 TP			RECOMMENDED	ELIMINADO ELIMINATED	INTRODUCIDO INTRODUCED
	12120261	INSTAL. ELECTRICA 10, 13, 18, 25 UL	ELECT. INSTALLATION 10, 13, 18, 25	1	1	1	1						
	12120257	INSTAL. ELECTRICA 35A, 60B UL	ELECT. INSTALLATION 35A, 60B UL					1					
	12121936	CABL. CALENTAMIENTO AF 10, 13 UL	HEATING WIRING AF 10, 13 UL	1	1								
	12121907	CABL. CALENTAMIENTO AF 18 KG UL	HEATING WIRING AF 18 KG UL			1							
	12121901	CABL. CALENTAMIENTO AF 25 KG UL	HEATING WIRING AF 25 KG UL				1						
	12121893	CABL. CALENTAMIENTO AF 35KG UL	HEATING WIRING AF 35 KG UL					1					
	12120274	CABLEADO PTC+R UL	PTC+R UL WIRING	1	1	1	1	1			X		
	12120263	CABLEADO VALVULA VACIADO UL	UL DRAIN VALVE WIRING	1	1	1	1	1					
	12121981	CABLEADO PUERTA UL	UL DOOR WIRING	1	1	1	1	1					
	12025067	CABLEADO ELECTR.VALV.VAPOR	STEAM VALVE ELETRIC WIRING	1	1	1	1	1				S MODELS	
	12043762	CABLEADO TIERRA EV UL	ELECTROVALVES GROUND WIRING					1					
	12120279	CABLEADO CONEC. MOTOR 400V	ENGINE CONNECTOR WIRING 400V					1					
	12044612	CABLEADO CONECT. DE 8 A 6 VIAS	8 TO 6 WAY CONNECTOR WIRING				1						

	RECOMENDADOS / RECOMMENDED	LÁMINA / DRAWING		FAGOR

ITEM	REFERENCIA REFERENCE	DENOMINACIÓN	DENOMINATION	LA-11 TP	LA-14 TP	LA-18 TP	LA-25 TP	LA-35 TP				CONJUNTO FUNCIONAL / FUNCTIONAL PART
10	12113512	ADHESIVO FAGOR TP	FAGOR TP ADHESIVE	1	1	1	1	1				MUEBLE / CABINET
11	12113854	ADHESIVO ON/OFF FAGOR	FAGOR ON/OFF ADHESIVE	1	1	1	1	1				MUEBLE / CABINET
5	12025077	AMORTIGUADOR 120N SUSPA	DAMPER 120N	4		8	8					ARMAZON / FRAME
5	12025078	AMORTIGUADOR 90N SUSPA	DAMPER 90N		8							ARMAZON / FRAME
5	12024980	AMORTIGUADOR 140N SUSPA	DAMPER 140					12				ARMAZON / FRAME
16	12025036	SONDA 64KOHMIO NTC	64KOHM NTC PROBE	1	1	1	1	1				CUBA / TUB
32	12096597	LIMITADOR DE SEGURIDAD	SAFETY THERMOSTAT	1	1	1	1	1				CUBA / TUB
29	12023340	VALVULA VAPOR 1/2 50/60HZ	STEAM VALVE 1/2 50/60HZ	1	1	1						CUBA / TUB
29	12024331	VALVULA VAPOR 3/4" 60HZ.	STEAM VALVE 3/4 60HZ				1	1				CUBA / TUB
18	12096226	RESIST. CALENT. 2000W	HEATING RESISTOR 2000W	3								CUBA / TUB
18	12096023	RESIST. CALENT. 3000W	HEATING RESISTOR 3000W		3							CUBA / TUB
18	12096051	RESIST. CALENT. 4000W	HEATING RESISTOR 4000W			3						CUBA / TUB
18	12041359	RESIST. CALENT. 6000W	HEATING RESISTOR 6000W				3					CUBA / TUB
18	12092855	RESIST. CALENT. 7000W	HEATING RESISTOR 7000W					3				CUBA / TUB
7	12007767	JUNTA PUERTA	DOOR SEAL	1								FR. CUBA / TUB FRONT
7	12023284	JUNTA PUERTA	DOOR SEAL		1	1	1					FR. CUBA / TUB FRONT
7	12048069	JUNTA PUERTA	DOOR SEAL					1				FR. CUBA / TUB FRONT
16	12119770	CIERRE COMPLETO 2015	COMPLETE LOCK 2015	1	1	1	1	1				FR. CUBA / TUB FRONT
3	12023273	CORREA POLY-V PJ 1301 (8 DIENTES)	BELT POLY-V PJ 1301 (8 TEETH)	1								TAMBOR / DRUM
3	12023269	CORREA POLY-V PJ 1600 (8 DIENTES)	BELT POLY-V PJ 1600 (8 TEETH)		1							TAMBOR / DRUM
3	12023267	CORREA POLY-V PJ 1663 (8 DIENTES)	BELT POLY-V PJ 1663 (8 TEETH)			1						TAMBOR / DRUM
3	12023252	CORREA POLY-V PJ 1854 (12 DIENT.)	BELT POLY-V PJ 1854 (12 TEETH)				1					TAMBOR / DRUM
3	12104292	CORREA POLY-V PJ 2083 (12 DIENT.)	BELT POLY-V PJ 2083 (12 TEETH)					1				TAMBOR / DRUM
13	12023197	MOTOR 230V AC 3N 750W 2800RPM	ENGINE 230V AC 3N 750W 2800RPM	1								TAMBOR / DRUM
13	12023195	MOTOR 230V AC 3N 1100W 2800RPM	ENGINE 230V AC 3N 1100W 2800RPM		1							TAMBOR / DRUM
13	12023194	MOTOR 230V AC 3N 2200W 2800RPM	ENGINE 230V AC 3N 2200W 2800RPM			1						TAMBOR / DRUM
13	12023189	MOTOR 230V AC 3N 3KW 2800RPM	ENGINE 230V AC 3N 3KW 2800RPM				1					TAMBOR / DRUM
13	12046405	MOTOR 230V AC 3N 4KW 1500RPM	ENGINE 230V AC 4N 3KW 1500RPM					1				TAMBOR / DRUM
18	12114100	SENSOR MAGNTICO 12V	MAGNETIC SENSOR 12V	1	1	1	1	1				TAMBOR / DRUM
3	12024404	VALVULA VACIADO	DRAINAGE VALVE	1	1	1	1	1				CUBETERA / TRAY
1	12119488	DISPLAY TOUCH PLUS	DISPLAY TOUCH PLUS	1	1	1	1	1				ELECTRICO / ELECTRIC
3	12120235	SETA DE EMERGENCIA	EMERGENCY STOP BUTTON	1	1	1	1	1				ELECTRICO / ELECTRIC
4	12120238	SOPORTE SETA EMERGENCIA	EMERGENCY STOP SUPPORT	1	1	1	1	1				ELECTRICO / ELECTRIC
5	12120237	PULSAD. 250V AC 16A 1VIA 2POS UL	250V AC 16A 1WAY 2POS UL SWITCH	1	1	1	1	1				ELECTRICO / ELECTRIC
6	12120815	TARJETA PRINCIPAL TP (LIGHT)	MAIN BOARD TP (LIGHT)	1	1	1	1	1				ELECTRICO / ELECTRIC
7	12119961	CABLE USB MACHO-HEMBRA	USB WIRE MALE-FEMALE	1	1	1	1	1				ELECTRICO / ELECTRIC
8	12134029	VARIADOR DELTA PROGRAMADO	PROGRAMMED DELTA INVERTER	1								ELECTRICO / ELECTRIC
8	12134031	VARIADOR DELTA PROGRAMADO	PROGRAMMED DELTA INVERTER		1							ELECTRICO / ELECTRIC
8	12134047	VARIADOR DELTA PROGRAMADO	PROGRAMMED DELTA INVERTER			1						ELECTRICO / ELECTRIC
8	12131875	VARIADOR DELTA PROGRAMADO	PROGRAMMED DELTA INVERTER				1					ELECTRICO / ELECTRIC
8	12131879	VARIADOR DELTA PROG. (460V)	PROG. DELTA INVERTER (460V)					1				ELECTRICO / ELECTRIC
8	12134048	VARIADOR DELTA PROG. (230V)	PROG. DELTA INVERTER (230V)					1				ELECTRICO / ELECTRIC
9	12111795	CONTACTOR 230V AC 20A 4via UL	230V AC 20A 4via UL CONTACTOR	2	2	2						ELECTRICO / ELECTRIC
9	12041014	RELE 230V AC 50/60HZ 40A 2VIA	RELAY 230V AC 50/60HZ 40A 2WAY				2	2				ELECTRICO / ELECTRIC
10	12023706	RELE 230V AC 50/60HZ 16A 2VIA	RELAY 230V AC 50/60HZ 16A 2WAY	1	1	1	1					ELECTRICO / ELECTRIC
10	12024040	CONTACTOR 230V AC 20A 4via UL	230V AC 20A 4via UL CONTACTOR					1				ELECTRICO / ELECTRIC
11	12131303	MODULO PROCESADOR GRABADO	RECORDED PROCESSOR MODULE	1	1	1	1	1				ELECTRICO / ELECTRIC
12	12128262	SENSOR DE PRESION 50mbar	50mbar PRESSURE SENSOR	1	1	1	1	1				ELECTRICO / ELECTRIC
14	12116823	TRANSFORMADOR 1N 50W 240V/12V	1N 50W 240V/12V UL TRANSFORMER	1	1	1	1	1				ELECTRICO / ELECTRIC
17	12024628	INTERRUP. 63A 3VIA 2POS SECCI UL	63A 3WAY 2POS ISOLATOR SWITCH	1	1	1	1	1				ELECTRICO / ELECTRIC
28	12023921	ELECTROVALVULA 3 VIAS	3 WAY SOLENOID VALVE	1	1	1	1	1				ELECTRICO / ELECTRIC
29	12025161	ELECTROVALVULA SIMPLE	SIMPLE SOLENOID VALVE	1	1	1	1	1				ELECTRICO / ELECTRIC
30	12023794	ELECTROVALVULA 2 VIAS	2 WAY SOLENOID VALVE	2	2	2						ELECTRICO / ELECTRIC
30	12023551	ELECTROVALVULA SIMPLE	SIMPLE SOLENOID VALVE				3	3				ELECTRICO / ELECTRIC
31	12024622	BOBINADO EV SIMPLE	SIMPLE SOLENOID VALVE COIL				3	3				ELECTRICO / ELECTRIC
34	12024106	VENTILADOR 230V AC 1N 36KW	FAN 230V AC 1N 36KW					1				ELECTRICO / ELECTRIC
	12120274	CABLEADO PTC+R UL	PTC+R UL WIRING	1	1	1	1	1				VARIOS / VARIOUS

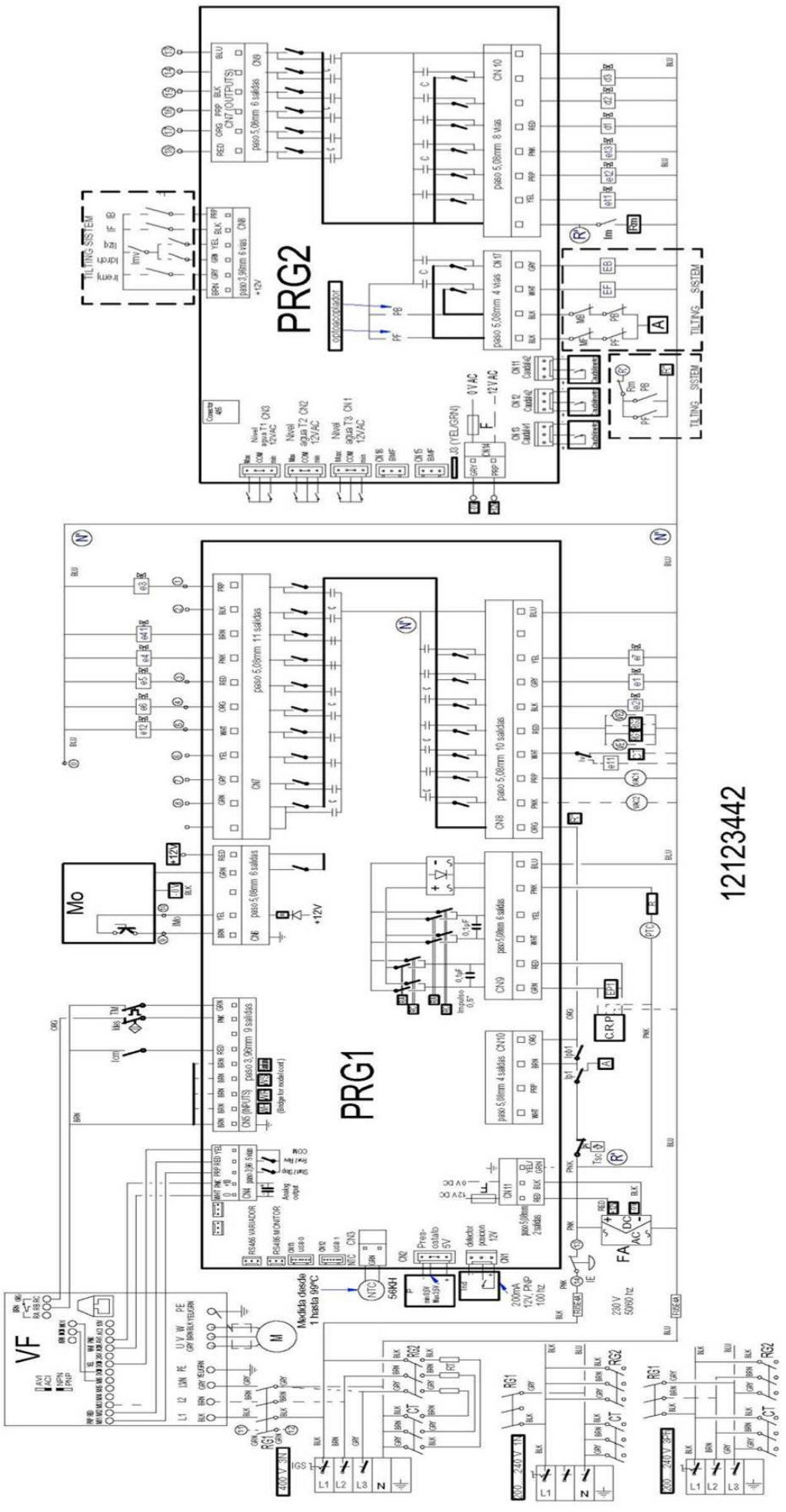

Drawing Nr.	Signature	Date	ESQUEMA TEORICO / THEORIC. SCHEME	Sheet
	Iban R.	dic-15	LA-11-14-18-25-35 TP	13

FAGOR

Simb / LENG		ESPAÑOL	ENGLISH	FRANÇAIS	DEUTSCH	ITALIANO
CT1, CT2	=	Contactor Calentamiento	Heating Contactor	Contacteur Chauffe	Heizschütz	Contatore Riscaldamento
CVF	=	Contactor Variador	Converter Contactor	Contacteur Convertisseur	Schütz Frequenzumwandler	Contactore Convertitore
5	=	Dosificador Neutralizante.	Neutralizer feeder	Doseur Neutralisant	Dosiervorrichtung Neutralspülmittel	Dosatore Neutralizzante
6	=	Dosificador jabon liquido.	Liquid soap feeder	Doseur lessive liquide	Dosiervorrichtung Flüssigseife	Dosatore sapone liquido
7	=	Dosificador aditivos.	Additive feeder	Doseur additifs	Dosiervorrichtung Zusatzmittel	Dosatore additivi
D.T.	=	Display/Teclado	Display/Keyboard	Écran/Clavier	Display/Tastatur	Display/Tastiera
e1	=	Electro válvula agua Fría.	Cold water electrically operated valve	Électrovanne eau Froide	Elektroventil Kaltwasser	Elettrovalvola acqua Fredda
e2	=	Electro válvula agua Caliente	Hot water electrically operated valve	Électrovanne eau Chaude	Elektroventil Warmwasser	Elettrovalvola acqua Calda
e3	=	Electro válvula Prelavado.	Pre-wash electrically operated valve	Électrovanne Prélavage	Elektroventil Vorwaschen	Elettrovalvola Prelavaggio
e4, e41	=	Electro válvula Lavado.	Wash electrically operated valve	Électrovanne Lavage	Elektroventil Hauptwaschgang	Elettrovalvola Lavaggio
e5	=	Electro válvula Lejia.	Bleach electrically operated valve.	Électrovanne Eau de Javel	Elektroventil Bleiche	Elettrovalvola Candeggina
e6	=	Electro válvula Suavizante.	Fabric softener electrically operated valve	Électrovanne Assouplissant	Elektroventil Weichspüler	Elettrovalvola Ammorbidente
e7	=	Electro válvula agua Descalcificada	Delimed water electrically operated valve	Électrovanne eau Adoucie	Elektroventil entkalktes Wasser	Elettrovalvola acqua Decalcificata
e11	=	Electro válvula Vapor.	Steam electrically operated valve	Électrovanne Vapeur	Elektroventil Dampf	Equilibrado Vapore
EB	=	Electro válvula de aire Basculacion Trasera	Air Valve of the Back Tilting	Soupape à air de l'inclinaison arrière	Luftventil des rückseitigen Kippens	Valvola per aria di inclinazione posteriore
EF	=	Electro válvula de aire Basculacion Frontal	Air Valve of the Front Tilting	Soupape à air de l'inclinaison avant	Luftventil des vorderen Kippens	Valvola per aria di inclinazione anteriore
EP	=	Electroimán de Puerta.	Door electric magnet	Électro-aimant de Porte	Elektromagnet Gerätetür	Elettromagnete Porta
FI	=	Filtro de Interferencias.	Interference filter	Filtre Anti-parasites	Störungsfilter	Filtro Interferenze
F	=	Fusible.	Fuse	Fusible	Sicherung	Fusibile
IE	=	Pulsador Parada de emergencia.	Emergency stop push button	Bouton-poussoir Arrêt d'urgence	Not-Aus-Taster	Pulsante Arresto di emergenza
IG	=	Interruptor general.	General switch	Interrupteur général	Hauptschalter	Interruttore generale
IGS	=	Interruptor General de seguridad.	General safety switch	interrupteur Général de sécurité	Sicherheitshauptschalter	Interruttore Generale di sicurezza
IB	=	Interruptor Basculacion Trasero del Mando.	Back Tilting Switch of Control	Commutateur de inclinaison arrière de commande	Rückseitiger kippenschalter der Steuerung	Interruttore di inclinazione posteriore di controllo
Idrch	=	Interruptor Rotacion a Derechas del Mando	Switch of Spins to the Right of Control	Commutateur des rotations à la droite de la comm	Schalter von Drehbeschleunigungen auf der rechten Seite der Steuerung	Interruttore delle rotazioni alla destra di controllo
Ides	=	Interruptor de desequilibrio.	Unbalance switch	Interrupteur de balourd	Ungleichgewichtsschalter	Interruttore di squilibrio
IF	=	Interruptor Basculacion Frontal Mando.	Front Tilting Switch of Control	Front Tilting Switch of Contrôle	Vorderer kippenschalter der Steuerung	Interruttore di inclinazione anteriore di controllo
Iizq	=	Interruptor Rotacion a Izquierdas Mando	Switch of Left Spin of Control	Commutateur de rotation gauche de commande	Schalter der linken Drehbeschleunigung der Steuerung	Interruttore della rotazione di sinistra di controllo
Im	=	Interruptor Movimiento / parada / Mando	Stopped Motion Switch	Détecteur D'arrêt		
IMo	=	Interruptor Monedero.	Coin slote switch	Interrupteur Monnayeur	Münzschalter	Interruttore Portamonete
Ip	=	Interruptor puerta Cerrada.	Closed door switch	Interrupteur porte Fermée	Schalter Tür geschlossen	Interruttore porta Chiusa
Ipb	=	Interruptor puerta bloqueada.	Door lock switch	Interrupteur porte verrouillée	Schalter Tür verriegelt	Interruttore porta bloccata
Iremj	=	Interruptor de Remojo del Mando	Soaking Switch of Control	Commutateur de trempage de commande	Tränkender Schalter der Steuerung	Interruttore d'inzuppamento di controllo
Isc	=	Interruptor seguridad Temperatura	Hi-limit Thermostat	Thermostat Limiteur	Grenzthermostat	Termostato Limitatore
Iv	=	Interruptor Vapor	Steam Switch	Commutateur de vapeur	Dampf-Schalter	Interruttore del vapore
M	=	Motor.	Motor	Moteur	Motor	Motore
MB	=	Interruptor seguridad Basculacion Trasero.	Back Tilting Hi-limit Switch			
MF	=	Interruptor seguridad Basculacion Frontal.	Front Tilting Hi-limit Switch			
Mo	=	Monedero.	Coin slot	Monnayeur	Münzvorrichtung	Portamonete
NTC	=	Sensor temperatura.	Temperature sensor	Capteur température	Temperatursensor	Sensore temperatura
PB	=	Presostato Basculacion Trasero	Back Tilting Air Presure Low-Limit			
PF	=	Presostato Basculacion Frontal	Front Tilting Air Presure Low-Limit			
P, P2		Presostato Nivel de agua	Water Level Switch			
PRG	=	Circuito Programador.	Programmer Circuit	Circuit Programmateur	Kreislauf Programmiervorrichtung	Circuito Programmatore
PTC	=	PTC	PTC	PTC	PTC	PTC
Rb	=	Rele Basculacion Trasero	Back Tilting Relay			
Rf	=	Rele Basculacion Frontal	Front Tilting Relay			
Rm	=	Rele movimiento / Parada	Stopped Motion Relay	Relais Détecteur D'arrêt		
Rp	=	Rele Puerta	Closed door Relay	Relais porte Fermée		Rele porta Chiusa
Rpb	=	Rele Puerta Bloqueada	Door lock Relay	Relais porte verrouillée		Rele porta bloccata
RT	=	Resistencia Calentamiento.	Heating Resistors	Résistance Chauffe	Widerstand Aufheizung	Resistenza Riscaldamento
TL	=	Limitador Temperatura	Hi-limit Thermostat	Thermostat Limiteur	Grenzthermostat	Termostato Limitatore
Tm	=	Térmico de Motor.	Motor hot-wire	Thermique du Moteur	Motorwärmeschalter	Termico del Motore
Trf	=	Transformador	Transformer	Transformateur	Transformator	Trasformatore
Trf s/N	=	Transformador Versión sin Neutro.	Transformer Version without Neutral	Transformateur Version sans Neutre	Transformator Modell ohne Neutralstellung	Trasformatore Versione senza Neutro
VAC, VAC2	=	Válvula Vaciado	Emptying valve	Vanne Vidange	Ablassventil	Valvola Scarico
VE, VE1, VE2	=	Ventilador.	Fan	Ventilateur	Ventilator	Ventola
VF	=	Convertidor de Frecuencia.	Frequency converter	Convertisseur de Fréquence	Frequenzumwandler	Convertitore di Frequenza
VM	=	Ventilador Motor.	Fan motor	Ventilateur Moteur	Ventilator Motor	Ventola Motore
1...8	=	Puntos conexión dosificadores.	Feeder connection points	Points raccordement doseurs	Anschlussstellen Dosiervorrichtungen	Punti connessione dosatori
9 - 10	=	Entrada de la central de pago 24V =	Central Entrance of payment			
11 - 12	=	Salida hacia la central de pago	Exit towards Central of Payment			
COLOR	=	COLORES	COLOUR	COULEURS	FARBEN	COLORE
a	=	Azul	Blue	Bleu	Blau	Blu
am	=	Amarillo	Yellow	Jaune	Gelb	Giallo
am/ve	=	Amarillo/verde	Yellow / green	Jaune / vert	Gelb/grün	Giallo/verde
b	=	Blanco	White	Blanc	Weiß	Bianco
g	=	Gris	Grey	Gris	Grau	Grigio
m	=	Marrón	Brown	Marron	Braun	Marrone
n	=	Negro	Black	Noir	Schwarz	Nero
na	=	Naranja	Orange	Orange	Orange	Arancio
r	=	Rojo	Red	Rouge	Rot	Rosso
rs	=	Rosa	Pink	Rose	Rosa	Roseo
ve	=	Verde	Green	Vert	Grün	Verde
vi	=	Violeta	Purple	Violet	Violett	Viola
						P623014000