ARMARIO SNACK DE REFRIGERACIÓN CONCEPT / SNACK CABINET COOLING CONCEPT

CAFP-1402 19029672 / CAFP-1403 19029674 / CAFP-1404 19029676

CAFN-1402 19029690 / CAFN-1403 19029692 / CAFN-1404 19029695

CAEP-1402 19029724

FAGOR

Versión 2014-10

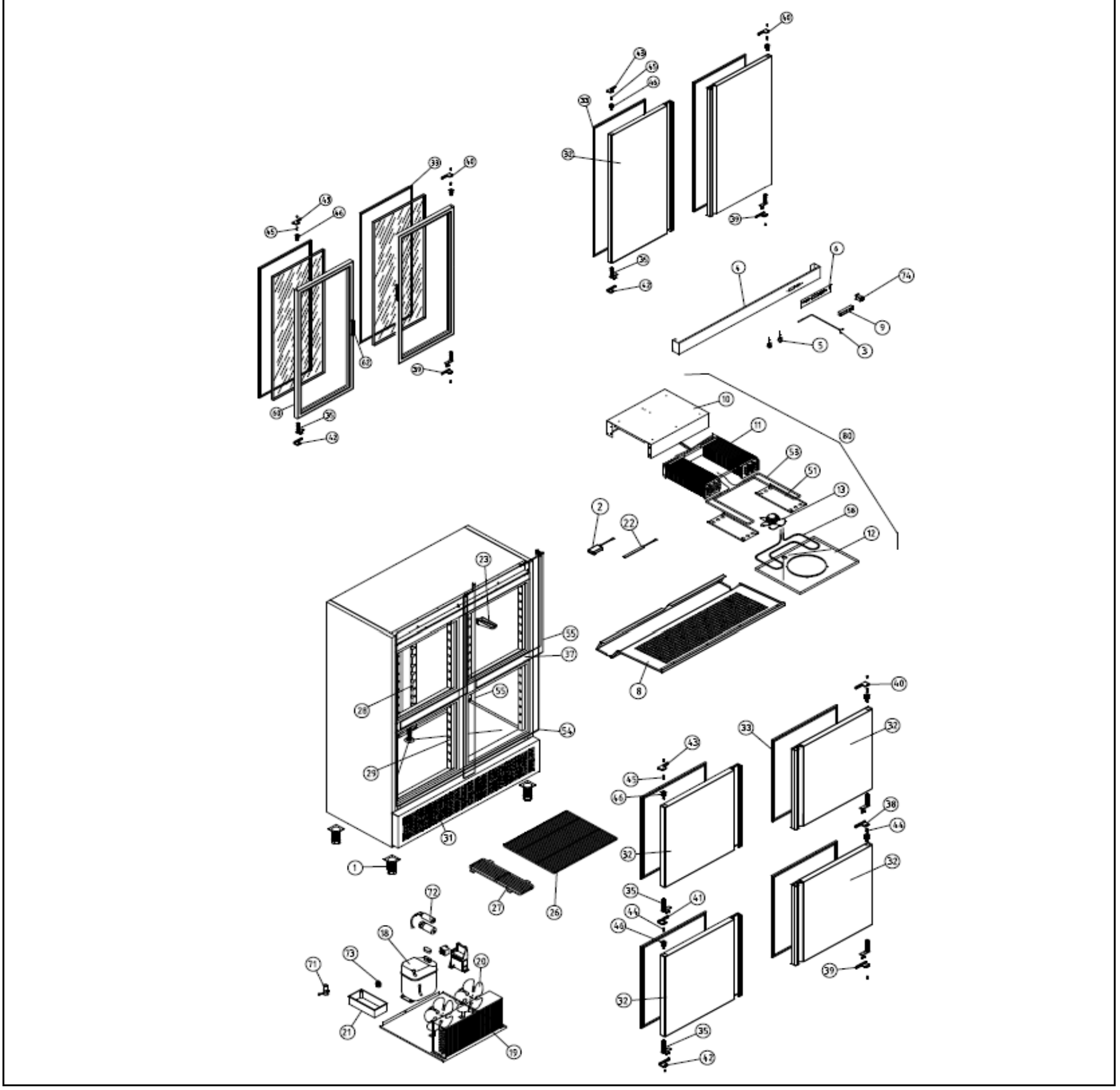

ARMARIO SNACK DE REFRIGERACIÓN CONCEPT / SNACK CABINET COOLING CONCEPT

CAF-1403 P 19029699 / CAF-1404 P 19029701

CAF-1403 C 19029711 / CAF-1404 C 19029713

CAF-1402 MIXT 19029721

FAGOR

Versión 2014-10

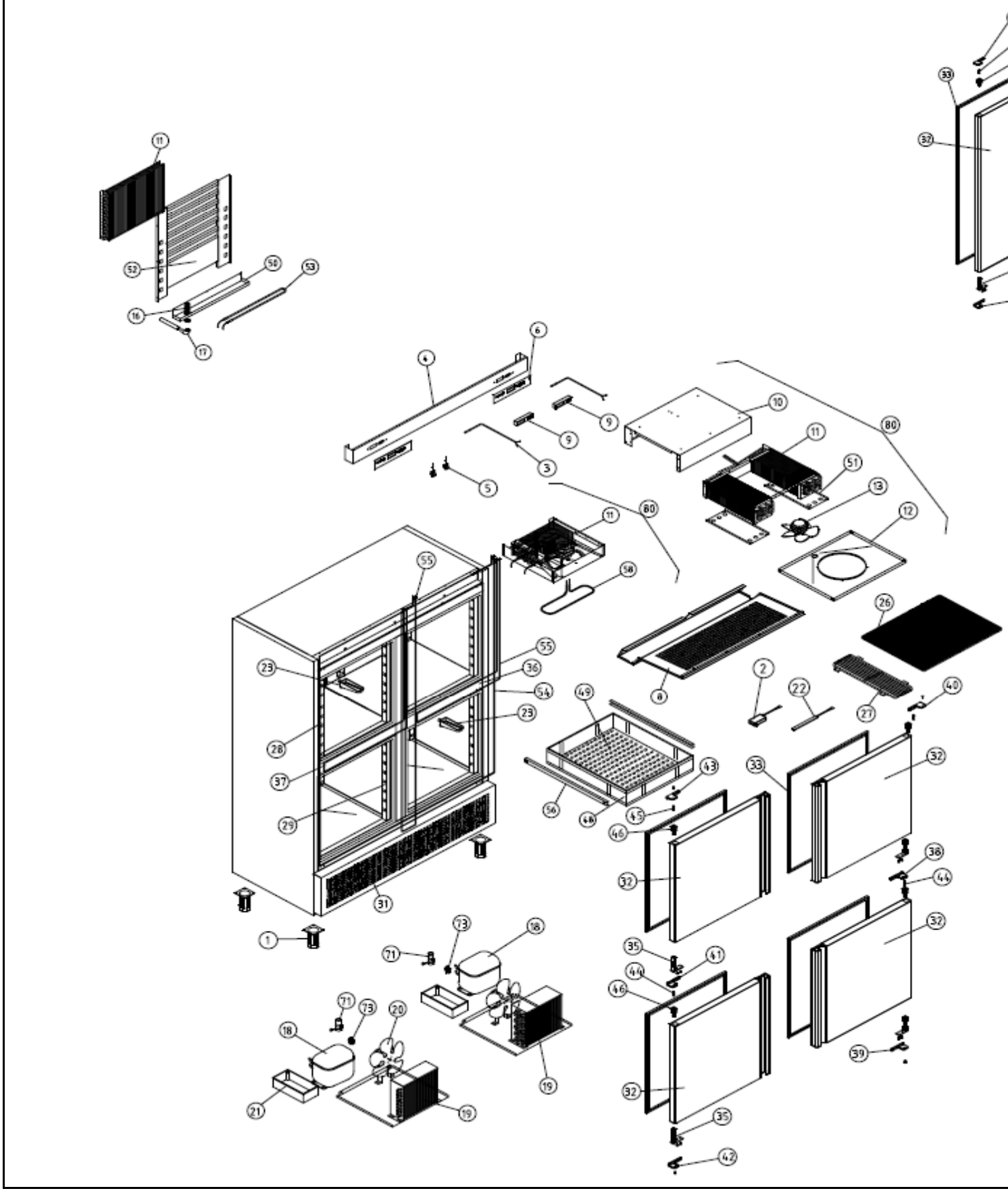

ARMARIO SNACK DE REFRIGERACIÓN CONCEPT / SNACK CABINET COOLING CONCEPT

CAFP-1402 / CAFP-1403 / CAFP-1404

CAFN-1402 / CAFN-1403 / CAFN-1404

CAEP-1402

FAGOR

Versión 2014-10

Nº	CODE CÓDIGO	RECOM.	DESCRIPCIÓN	DESCRIPTION	CAFP-1402	CAFP-1403	CAFP-1404	CAFN-1402	CAFN-1403	CAFN-1404	CAEP-1402
1	12033566		PATA REGULABLE ARM.GASTRO	GASTRO CABINET ADJUSTABLE LEG	4	4	4	4	4	4	4
2	12103609		FUENT APV-16-24 115-230 50/60Hz 24V 16W	APV-16-24 115-230 50/60Hz 24V 16W SOURCE	1	1	1				1
3	12045530		SONDA NTC 2,5 MTS	THERMOSTAT PROBE	1	1	1	1	1	1	1
4	12114245		CABEZA AFP-1400 FAGOR CONCEPT	HEAD AFP-1400 CONCEPT	1	1	1	1	1	1	1
5	12036888		MICROR.CONMUT.E3111CA	MICROR.CONMUT.E3111CA	2	2	2	2	2	2	2
6	12104752		ADHESIVO G. CONCEPT PWC	PWC CONCEPT RANGE STICKER	1	1	1	1	1	1	1
8	12114123		TAPA EVAPORADOR	EVAPORATOR COVER	1	1	1	1	1	1	1
9	12043611		TERMOSTATO POWER COMPAC REFRIG	POWER COOLING THERMOSTAT COMPAC	1	1	1				1
9	12040693		TERMOSTATO POWER COMPAC CONG.	FREEZER POWER COMPACT THERMOSTAT				1	1	1	
10	12074540		TECHO EVAP.MESAS/ARMARIOS	EVAPORATOR ROOF TABLES/ CABINETS	1	1	1				1
10	12070045		TECHO EVAPORADOR ARMARIOS	EVAPORATOR ROOF CABINETS				1	1	1	
11	12045174		EV. FC71B RH, 7T4R295A6S PINT.	EV. FC71B RH, 7T4R295A6S PINT.	1	1	1				1
11	12068179		FC-62 BAT.6T5R600A6S 2 CIRCUIT	FC-62 BAT.6T5R600A6S 2 CIRCUIT				1	1	1	
12	12070041		TAPA EVAPORADOR ARMARIOS	EVAPORATOR COVER CABINETS	1	1	1				1
12	12070045		TAPA EVAPORADOR ARMARIOS	EVAPORATOR COVER CABINETS				1	1	1	
13	12034545		VENTILADOR EVAPORADOR 5w Ø200 28º	FAN EVAPORATOR 5w Ø200 28º	1	1	1	1	1	1	1
18	12026066		COMPR.J2212GK 220V50Hz ASPERA	COMPR.J2212GK 220V50Hz ASPERA				1	1	1	
18	12046754		COMPR. NEK6210Z	COMPR. NEK6210Z	1	1	1				1
19	12030739		CONDENSAD STVF-139 VENTILADO	CONDENSAD STVF-139 VENTILADO				1	1	1	
19	12032340		CONDENSADOR 9x3 FAGC0021	CONDENSADOR 9x3 FAGC0021	1	1	1				1
20	12033477		VENT. 10w H84 Ø254 22º	FAN 10w H84 Ø254 22º	1	1	1				1
21	12036623		BANDEJA EVAPORACIÓN AUTOMÁTICA	BANDEJA EVAPORACIÓN AUTOMÁTICA	1	1	1	1	1	1	1
22	12117149		TIRA LED T3-270-3014-868.16-CW24V DC 2mt	LED T3-270-3014-868.16-CW24V DC 2mt	2	2	2				2
23	12037375		CANALIZADOR AGUA 150 GRIS REFRIGERACION	REFRIGERATION GREY 150 WATER DRAINAGE	1	1	1				1
23	12037314		CANALIZADOR AGUA 150 NEGRO MANT.CONGEL.	FREEZER BLACK 150 WATER DRAINAGE				1	1	1	
26	12034317		PARRILLA 560X542 AR.SNACK	GRILL 560X542 AR.SNACK	6	6	6	6	6	6	6
27	12037946		PARRILL.500X154SUPL.SNACK	GRILL 500X154 SUPL. SNACK	3	3	3	3	3	3	3
28	12034579		CREMALL.INT.AFP-SNACK	CREMALL.INT.AFP-SNACK	4	4	4	4	4	4	4
29	12034241		CREMALL.DEL.DCH.AFP-SNACK	CREMALL.DEL.DCH.AFP-SNACK	2	1		2	1		2
29	12034240		CREMAL.DEL.IZD.AFP-SNACK	CREMAL.DEL.IZD.AFP-SNACK	2	1		2	1		2
29	12035502		CREM.DELANT.DCH.PEQ.AFP	CREM.DELANT.DCH.PEQ.AFP		2	4		2	4	
29	12035504		CREM.DELANT.IZD.PEQ.AFP	CREM.DELANT.IZD.PEQ.AFP		2	4		2	4	
31	12069218		REJILLA GRUPO AFP-1400 CONCEPT	GRID GROUP AFP-1400 CONCEPT	1	1	1	1	1	1	1
32	12083604		PUE PEQ AFP/AFN CONCEPT IZD	PUE PEQ AFP/AFN CONCEPT IZD			2			2	
32	12049573		PUE PEQ AFP/AFN CONCEPT DCHA	PUE PEQ AFP/AFN CONCEPT DCHA		2	2		2	2	
32	12083602		PUE CARN AFP/AFN CONCEPT IZD	PUE CARN AFP/AFN CONCEPT IZD	1	1		1	1		
32	12083603		PUE CARN AFP/AFN CONCEPT DCHA	PUE CARN AFP/AFN CONCEPT DCHA	1			1			
33	12038148		BURLETE PUERTA 1457X636	DOOR GASKET 1457x636	2	1		2	1		2
33	12038144		BURLETE PUERTA 691X636	DOOR GASKET 691x636		2	4		2	4	
35	12038130		BIS.TRS1D DOBL MUELLE DV-2608	BIS.TRS1D DOBL MUELLE DV-2608	2	3	4	2	3	4	2
37	12083394		FRONTI HORZ.POST.AFP MAGNETICO	MAGNETIC HORZ.POST.AFP FRONTI		1	2		1	2	
38	12037088		SOP.BISAG. INF DCH. FRES	SOP.BISAG. INF DCH. FRES		1	1		1	1	
39	12037017		SOP.BISAG.INF.DCH.	SOP.BISAG.INF.DCH.	1	1	1	1	1	1	1
40	12041472		SOP.BISAG.SUP.DCH	SOP.BISAG.SUP.DCH	1	1	1	1	1	1	1
41	12036776		SOP.BISAG.INF IZD. FRES	SOP.BISAG.INF IZQ. FRES			1			1	
42	12036986		SOP.BISAG.INF.IZD.	SOP.BISAG.INF.IZD.	1	1	1	1	1	1	1
43	12041474		SOP.BISAG.SUP.IZD	SOP.BISAG.SUP.IZD	1	1	1	1	1	1	1
44	12037138		EJE ROSCA EXT.30X10INOX	THREADED SHAFT EXT.30X10INOX		1	2		1	2	
45	12038076		EJE30x10VARIL INOX ROSC.INT M6	SUP HUB. 30x10 ROD DOORS INOX.INT. M-6	2	2	2	2	2	2	2
46	12037723		CAJA ALOJAMIENTO MUELLE GRIS	GREY SPRING HOUSING BOX	2	3	4	2	3	4	2
51	12035348		CUBRERRESISTENCI EVAP.AFN-1400	CUBRERRESISTENCI EVAP.AFN-1400				1	1	1	
53	12037967		RESIST.BLIND.FC62-72 650W 1000	RESIST.BLIND.FC62-72 650W 1000				1	1	1	
54	12035540		RESIST.MARCO EXT.1400/1600 57W	RESIST.MARCO EXT.1400/1600 57W				1	1	1	
55	12036191		RESIST.FRONTI V.1400-1600 31W	RESIST.FRONTI V.1400-1600 31W				1	1	1	
55	12036316		RESIST.FRONTI H.1400-1600 12W	RESIST.FRONTI H.1400-1600 12W					1	2	
58	12036313		RESIST.BANDEJA 700-20W	RESIST.BANDEJA 700-20W				1	1	1	
60	12045918		PUERTA CRISTAL ARM. CARNICERA	GLASS DOOR ARM. BUTCHER							2
62	12068289		TIRAD. PT. CRISTAL	GLASS DOOR HANDLE							2
71	12040120		CONDENSADOR COMP. NEK 6210Z	CONDENSADOR COMP. NEK 6210Z	1	1	1				1
72	12049723		BLOQUE ARRANQUE J2212GK 50HZ	BLOQUE ARRANQUE J2212GK 50HZ				1	1	1	
73	12036939		RELE ARRAN. COMP. NEK 6210Z	RELE ARRAN. COMP. NEK 6210Z	1	1	1				1
74	12033148		RELE 25A	RELAY 25A				1	1	1	
80	12115886		UD.EV.ARM.SNACK 2C REF.	UD.EV.ARM.SNACK 2C REF.	1	1	1				1
80	12083711		UD.EV.ARM.SNACK 2C CONG.	UD.EV.ARM.SNACK 2C CONG.				1	1	1	

Notes:

ARMARIO SNACK DE REFRIGERACIÓN CONCEPT / SNACK CABINET COOLING CONCEPT

CAF-1403 P / CAF-1404 P

CAF-1403 C / CAF-1404 C

CAF-1402 MIXT

FAGOR

Versión 2014-10

Nº	CODE CÓDIGO	RECOM.	DESCRIPCIÓN	DESCRIPTION	CAF-1403 P	CAF-1404 P	CAF-1403 C	CAF-1404 C	CAF-1402 MIXT
1	12033566		PATA REGULABLE ARM.GASTRO	GASTRO CABINET ADJUSTABLE LEG	4	4	4	4	6
2	12103609		FUENT APV-16-24 115-230 50/60Hz 24V 16W	APV-16-24 115-230 50/60Hz 24V 16W SOURCE	1	1	1	1	
3	12045530		SONDA NTC 2,5 MTS	THERMOSTAT PROBE	2	2	2	2	2
4	12115995		CABEZA AF-1400 /C FAGOR CONCEPT	HEAD AF-1400 /C CONCEPT	1	1	1	1	1
5	12036888		MICROR.CONMUT.E3111CA	MICROR.CONMUT.E3111CA	2	2	2	2	2
6	12104752		ADHESIVO G. CONCEPT PWC	PWC CONCEPT RANGE STICKER	2	2	2	2	2
8	12114123		TAPA EVAPORADOR	EVAPORATOR COVER	1	1	1	1	
8	12112674		TAPA EVAPORADOR	EVAPORATOR COVER					2
9	12043611		TERMOSTATO POWER COMPAC REFRIG	POWER COOLING THERMOSTAT COMPAC	1	1	1	1	1
9	12040693		TERMOSTATO POWER COMPAC CONG.	FREEZER POWER COMPACT THERMOSTAT	1	1	1	1	1
10	12074540		TECHO EVAP.MESAS/ARMARIOS	EVAPORATOR ROOF TABLES/ CABINETS	1	1	1	1	2
11	12030935		EV.B14T2R426A6S DPTO.PESC PIN.	EV.B14T2R426A6S DPTO.PESC PIN.	1	1			
11	12045174		EV. FC71B RH, 7T4R295A6S PINT.	EV. FC71B RH, 7T4R295A6S PINT.	1	1	1	1	1
11	12048802		BAT. 6T 4R 300A 6S 2 CIRCUITO	BAT. 6T 4R 300A 6S 2 CIRCUITO					1
11	12068165		EV.COMP.FC-61B AR.C/T CONG IZD	EV.COMP.FC-61B AR.C/T CONG IZD			1	1	
12	12070041		TAPA EVAPORADOR ARMARIOS	EVAPORATOR COVER CABINETS	1	1	1	1	2
13	12034545		VENTILADOR EVAPORADOR 5w Ø200 28º	FAN EVAPORATOR 5w Ø200 28º	1	1	1	1	2
16	12037617		DESAGÜE 1/2 PULG. CUELLO CORTO	DRAIN 1/2 PULG.	1	1			
17	12037541		CODO PVC MIXTO 90º 20x1/2	CODO PVC MIXTO 90º 20x1/2	1	1			
18	12028976		COMPRES.FR-8.5-G R134A	COMPRES.FR-8.5-G R134A					1
18	12046754		COMPR. NEK6210Z	COMPR. NEK6210Z	1	1	1	1	
18	12059107		COMPR. TL-5-G R134A	COMPR. TL-5-G R134A	1	1			
18	12027322		COMPR.SC-15-CL R404A	COMPR.SC-15-CL R404A					1
18	12028143		COMPR.SC-12-CL R404A	COMPR.SC-12-CL R404A			1	1	
19	12030739		CONDENSAD STVF-139 VENTILADO	CONDENSAD STVF-139 VENTILADO					1
19	12032903		CONDENSADOR 9X2	CONDENSADOR 9X2					1
19	12032340		CONDENSADOR 9x3 FAGC0021	CONDENSADOR 9x3 FAGC0021	1	1	1	1	
19	12031472		CONDENSADOR 10X4 NEUTRO	CONDENSADOR 10X4 NEUTRO			1	1	
19	12033007		CONDENSADOR 8X2 REF.C CT82DG	CONDENSADOR 8X2 REF.C CT82DG	1	1			
20	12033477		VENT. 10w H84 Ø254 22º	FAN 10w H84 Ø254 22º	1	1	2	2	1
20	12059041		VENT 5W H72 Ø200 28º	FAN 5w H72 Ø200 28º	1	1			
21	12036623		BANDEJA EVAPORACIÓN AUTOMÁTICA	BANDEJA EVAPORACIÓN AUTOMÁTICA	1	1	2	2	1
22	12117149		TIRA LED T3-270-3014-868.16-CW24V DC 2mt	LED T3-270-3014-868.16-CW24V DC 2mt	2	2	2	2	
23	12037375		CANALIZADOR AGUA 150 GRIS REFRIGERACION	REFRIGERATION GREY 150 WATER DRAINAGE	1	1	1	1	
23	12037314		CANALIZADOR AGUA 150 NEGRO MANT.CONGEL.	FREEZER BLACK 150 WATER DRAINAGE			1	1	2
26	12034317		PARRILLA 560X542 AR.SNACK	GRILL 560X542 AR.SNACK	4	4	4	4	6
27	12037946		PARRILL.500X154SUPL.SNACK	GRILL 500X154 SUPL. SNACK	1	1	1	1	
28	12034579		CREMALL.INT.AFP-SNACK	CREMALL.INT.AFP-SNACK	2	2	2	2	4
28	12036498		CREMALL.INT.DPTO.AF-702-C	CREMALL.INT.DPTO.AF-702-C			2	2	
28	12035898		CREMAL.INT.PEQ.EXT.DPTO	CREMAL.INT.PEQ.EXT.DPTO	2	2	2	2	
29	12034241		CREMALL.DEL.DCH.AFP-SNACK	CREMALL.DEL.DCH.AFP-SNACK	1		1		2
29	12034240		CREMAL.DEL.IZD.AFP-SNACK	CREMAL.DEL.IZD.AFP-SNACK	1		1		2
29	12035502		CREM.DELANT.DCH.PEQ.AFP	CREM.DELANT.DCH.PEQ.AFP	1	3	1	3	
29	12035504		CREM.DELANT.IZD.PEQ.AFP	CREM.DELANT.IZD.PEQ.AFP	1	3	1	3	
29	12035486		CREM.DEL.PEQ.AFP-GN DCHA.	CREM.DEL.PEQ.AFP-GN DCHA.	2	2	2	2	
31	12069218		REJILLA GRUPO AFP-1400 CONCEPT	GRID GROUP AFP-1400 CONCEPT	1	1	1	1	1
32	12083604		PUE PEQ AFP/AFN CONCEPT IZD	PUE PEQ AFP/AFN CONCEPT IZD		2		2	
32	12049573		PUE PEQ AFP/AFN CONCEPT DCHA	PUE PEQ AFP/AFN CONCEPT DCHA	2	2	2	2	
32	12083602		PUE CARN AFP/AFN CONCEPT IZD	PUE CARN AFP/AFN CONCEPT IZD	1		1		1
32	12083603		PUE CARN AFP/AFN CONCEPT DCHA	PUE CARN AFP/AFN CONCEPT DCHA					1
33	12038148		BURLETE PUERTA 1457X636	DOOR GASKET 1457x636	1		1		2
33	12038144		BURLETE PUERTA 691X636	DOOR GASKET 691x636	2	4	2	4	
35	12038130		BIS.TRS1D DOBL MUELLE DV-2608	BIS.TRS1D DOBL MUELLE DV-2608	3	4	3	4	2
36	12083396		FRONTI HOR.POST.AF-700,800-C/P	MAGNETIC HORZ.POST.AFP-700,800-C/P	1	1	1	1	
37	12083394		FRONTI HORZ.POST.AFP MAGNETICO	MAGNETIC HORZ.POST.AFP FRONTI		1		1	
38	12037088		SOP.BISAG. INF DCH. FRES	SOP.BISAG. INF DCH. FRES	1	1	1	1	
39	12037017		SOP.BISAG.INF.DCH.	SOP.BISAG.INF.DCH.	1	1	1	1	1
40	12041472		SOP.BISAG.SUP.DCH	SOP.BISAG.SUP.DCH	1	1	1	1	1
41	12036776		SOP.BISAG.INF IZD. FRES	SOP.BISAG.INF IZQ. FRES		1		1	
42	12036986		SOP.BISAG.INF.IZD.	SOP.BISAG.INF.IZD.	1	1	1	1	1
43	12041474		SOP.BISAG.SUP.IZD	SOP.BISAG.SUP.IZD	1	1	1	1	1
44	12037138		EJE ROSCA EXT.30X10INOX	THREADED SHAFT EXT.30X10INOX	1	2	1	2	
45	12038076		EJE30x10VARIL INOX ROSC.INT M6	SUP HUB. 30x10 ROD DOORS INOX.INT. M-6	2	2	2	2	2
46	12037723		CAJA ALOJAMIENTO MUELLE GRIS	GREY SPRING HOUSING BOX	3	4	3	4	2
48	12033758		CUBETA DPTO PESCADO 530x460	TRAY DEPT FISH 530X460	3	3			

48	12033784		CUBETA DPTO CONGEL.530X540	TRAY DEPT CONGEL.530X540			3	3		
49	12034642		FOND.PERF.CUB.DPTO.530X460 AFP-SNACK	FOND.PERF.CUB.DPTO.530X460 AFP-SNACK	3	3				
50	12035779		BANDEJA GOTEO DPTO.PESCADO	DRIP TRAY DPTO. FISH	1	1				
52	12069490		DUELAS DPTO.PESC.1600	SLAT DPTO. PESC. 1600	1	1				
53	12033255		RESIST.DESES.DEP.PESC.220V425W	RESIST.DESES.DEP.PESC.220V425W	1	1				
53	12034637		RESIST.BLIND.FC61-71 350W	RESIST.BLIND.FC61-71 350W					1	
54	12036014		RESIST.MARCO EXT.700/800 43W	RESIST.MARCO EXT.700/800 43W					1	
54	12035540		RESIST.MARCO EXT.1400/1600 57W	RESIST.MARCO EXT.1400/1600 57W			1	1		
55	12036191		RESIST.FRONTI V.1400-1600 31W	RESIST.FRONTI V.1400-1600 31W			1	1		
55	12036316		RESIST.FRONTI H.1400-1600 12W	RESIST.FRONTI H.1400-1600 12W			1	1		
56	12037936		GUIA SNACK DPTO CONGEL.562mm	GUIDE SNACK DPTO CONGEL. 562 mm			6	6		
56	12036880		GUIA SNACK DPTO.PESCADO 519mm	GUIDE SNACK DPTO FISH 519 mm	6	6				
58	12036313		RESIST.BANDEJA 700-20W	RESIST.BANDEJA 700-20W					1	
58	12035911		RESIST.BANDEJA DEPART.18W	RESIST.BANDEJA DEPART.18W			1	1		
71	12018649		CONDEN.ARRANQUE SC-117U5017 80 mF	CONDEN.ARRANQUE SC-117U5017 80 mF					1	
71	12033999		CONDEN.ARRANQUE TL-G 17U5014 60 mF	CONDEN.ARRANQUE TL-G 17U5014 60 mF	1	1				
71	12033454		CONDEN.ARRANQUE FR-117U5015 80 mF	CONDEN.ARRANQUE FR-117U5015 80 mF					1	
71	12040120		CONDENSADOR COMP. NEK 6210Z	CONDENSADOR COMP. NEK 6210Z	1	1	1	1		
71	12018649		COND.ARRANQ.SC 117U5017 80MF	COND.ARRANQ.SC 117U5017 80MF			1	1		
73	12034983		RELE ARRANQUE COMPRESOR SC-15CL 60	RELE ARRANQUE COMPRESOR SC-15CL 60					1	
73	12034981		RELE ARRANQUE COMPRESOR TL-5G 6000	RELE ARRANQUE COMPRESOR TL-5G 6000	1	1				
73	12034947		RELE ARRANQUE COMPRESOR FR-8,5G 2	RELE ARRANQUE COMPRESOR FR-8,5G 2					1	
73	12036939		RELE ARRAN. COMP. NEK 6210Z	RELE ARRAN. COMP. NEK 6210Z	1	1	1	1		
73	12035096		RELE ARRANQ COMPR.SC-12CL 6005	RELE ARRANQ COMPR.SC-12CL 6005			1	1		
80	12115886		UD.EV.ARM.SNACK 2C REF.	UD.EV.ARM.SNACK 2C REF.	1	1	1	1		
80	12115882		UD.EV.ARM.SNACK 1C REF.	UD.EV.ARM.SNACK 1C REF.					1	
80	12083710		UD.EV.ARM.SNACK 1C CONG.	UD.EV.ARM.SNACK 1C CONG.					1	
80	12083675		UD.EV.AF-1400-C CONG.	UD.EV.AF-1400-C CONG.			1	1		

Notes: