DESPIECE TECNICO

Cocinas a Gas
Fourneaux à Gaz
Gas Ranges
Cucine a Gas
Fogões a Gás

Modelos:

CG-200 S
CG-300 S
CG-210
CG-310

Octubre 2009 October

Fagor Industrial

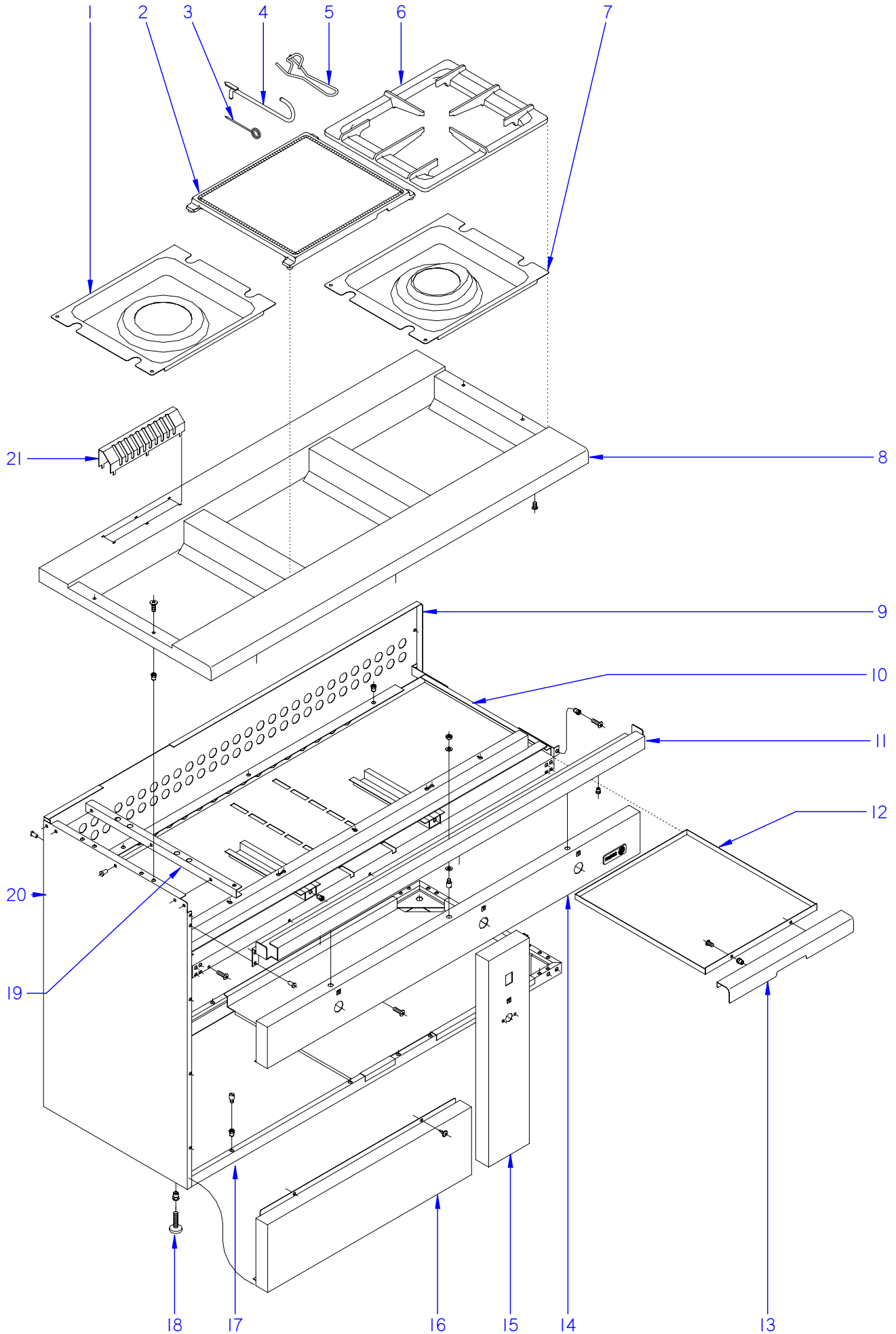

ITEM MARCADO EN COLOR = REPUESTO RECOMENDADO
COLOURED ITEM = RECOMMENDED SPARE PART

N plano	Firma	Fecha	Aparato	MUEBLE	Lamina	
C-2165		2009-10	COCINAS SNACK		1	Fagor Industrial S.Coop. FAGOR Oñate

MOD.	COCINAS SNACK	ZONA	MUEBLE	PLANO	C-2165

ITEM	CODIGO	DENOMINACION	TEXTO	CG-200 S	CG-300 S	CG-210	CG-310				
1	U505409000	VERTEDERO 6000 CG-310	DISCHARGE 6000 CG-310	1	1	1	1				
	Q152017000	TORNILLO AMARRE M6X13 A304	FASTENING SCREW M6X13 A304	4	4	4	4				
	Q419005000	REMACHE 4X8 ALMG3 / ALUMINIO	RIVET 4X8 ALMG3 / ALUMINIUM	2	2	2	2				
2	U565406000	PLACA	PLATE	1	1	1	1				
3	623500000	AGUJA DE LIMPIEZA 08555	CLEANING NEEDLE 08555	1	1	1	1				
4	623600000	PALANCA LEVANTAPLACAS 06330	PLATE LIFT LEVER 06330	_	_	1	1				
5	U506501000	PALANCA LEVANTAPLACAS 17106	PLATE LIFT LEVER 17106	1	1	1	1				
6	U565403000	PARRILLA ESMALTADA	ENAMELLED GRILLE	1	2	1	2				
7	U505408000	VERTEDERO 4000	DISCHARGE 4000	_	1	_	1				
8	U535430000	MESA COMPLETA CG-200	COMPLETE TABLE CG-200	1	_	_	_				
8	U525430000	MESA COMPLETA CG-300	COMPLETE TABLE CG-300	_	1	_	_				
8	U515430000	MESA COMPLETA CG-210	COMPLETE TABLE CG-210	_	_	1	_				
8	U505430000	MESA COMPLETA CG-310	COMPLETE TABLE CG-310	_	_	_	1				
9	U532831000	PANEL POSTERIOR -200	REAR PANEL -200	1	_	_	_				
9	U522834000	PANEL POSTERIOR -300	REAR PANEL -300	_	1	_	_				
9	U512802000	PANEL POSTERIOR -210	REAR PANEL -210	_	_	1	_				
9	U502802000	PANEL POSTERIOR -310	REAR PANEL -310	_	_	_	1				
10	U502623000	BASE BANDEJA 200	TRAY BASE 200	1	_	_	_				
10	U505455000	BASE BANDEJA 300	TRAY BASE 300	_	1	_	_				
10	U502621000	BASE BANDEJA 210	TRAY BASE 210	_	_	1	_				
10	U505454000	BASE BANDEJA 310	TRAY BASE 310	_	_	_	1				
11	U512653000	TIRANTE FIJ PORTAMAND 210/200	CONTROL HOLDER FAST. TIE RO	1	_	1	_				
11	U502666000	TIRANTE FIJ PORTAMAND 310/300	CONTROL HOLDER FAST. TIE RO	_	1	_	1				
	Q419005000	REMACHE 4X8 ALMG3 / ALUMINIO	RIVET 4X8 ALMG3 / ALUMINIUM	4	4	4	4				
	Q151336000	TORNILLO SOPORTE GUIAS	GUIDE SUPPORT BOLT	3	3	3	3				
	Q162040000	TUERCA EXAGONAL M6	HEXAGONAL NUT M6	3	3	3	3				
	Q242040000	ARANDELA ABANICO A6 A.304	FAN WASHER A6 A.304	3	3	3	3				
	Q232040000	ARANDELA A6	WASHER A6	3	3	3	3				
12	U502610000	BANDEJA RECOGE GRASAS	GREASE COLLECTION TRAY	2	3	2	3				

MOD.	COCINAS SNACK	ZONA	MUEBLE	PLANO	C-2165

ITEM	CODIGO	DENOMINACION	TEXTO	CG-200 S	CG-300 S	CG-210	CG-310				
13	U502635000	ASA DE BANDEJA	TRAY HANDLE	2	3	_	_				
13	U502636000	ASA DE BANDEJA	TRAY HANDLE	_	_	2	3				
	Q221343000	REMACHE EXAGONAL M6	HEXAGONAL RIVET M6	4	4	4	4				
14	U532832000	PANEL PORTAMANDOS CG-200	CONTROL HOLDER PANEL 200	1	_	_	_				
14	U522842000	PANEL PORTAMANDOS CG-300	CONTROL HOLDER PANEL 300	_	1	_	_				
14	U512852000	PANEL PORTAMANDOS CG-210	CONTROL HOLDER PANEL 210	_	_	1	_				
14	U502853000	PANEL PORTAMANDOS CG-310	CONTROL HOLDER PANEL 310	_	_	_	1				
	Q152004000	TORNIL. APLASTADO M5X13 A 304	FLAT HEADED SCREW M5x13 A 3	2	2	2	2				
	Q232040000	ARANDELA A6	WASHER A6	2	2	2	2				
	U262806000	ESCUDO FAGOR	FAGOR EMBLEM	1	1	1	1				
	Q221023000	CLIP SUJECIÓN RÁPIDA Ø5	RAPID CONNECT CLIP Ø5	2	2	2	2				
15	U512865000	PANEL ANTERIOR LATERAL	FRONT SIDE PANEL	_	_	1	_				
15	U502864000	PANEL ANT.CENTRAL GRILL CG310	FRONT CENTRAL PANEL GRILL (	_	_	_	1				
16	U502835000	PANEL EXT. ANTERIOR INFERIOR	FRONT LOWER EXT. PANEL	_	_	1	1				
	Q151301000	PHILIPS 8X5/8	PHILIPS 8X5/8	_	_	2	2				
17	U502619000	ZOCALO 210	SKIRTING 210	_	_	1	_				
17	U502617000	ZOCALO 310	SKIRTING 310	_	_	_	1				
	Q221343000	REMACHE EXAGONAL M6	HEXAGONAL RIVET M6	_	_	4	6				
	Q151336000	TORNILLO SOPORTE GUIAS	GUIDE SUPPORT BOLT	_	_	2	2				
18	Z200107000	PATA REGULABLE	ADJUSTABLE LEG	4	4	4	4				
	Q221345000	REMACHE EXAGONAL M.10	HEXAGONAL RIVET M.10	4	4	4	4				
19	U502645000	REFUERZO SUPERIOR	UPPER REINFORCEMENT	_	_	2	2				
	Q221342000	REMACHE EXAGONAL M5	HEXAGONAL RIVET M5	_	_	2	2				
20	U522850000	PANEL LATERAL	SIDE PANEL	2	2	_	_				
20	U512858000	PANEL LATERAL CG-210	SIDE PANEL CG-210	_	_	1	_				
20	U502846000	PANEL LATERAL CG-310	SIDE PANEL CG-310	_	_	1	2				
	Q221343000	REMACHE EXAGONAL M6	HEXAGONAL RIVET M6	4	4	4	4				
	Q221026000	CLIP SUJECIÓN RÁPIDA Ø4	RAPID CONNECT CLIP Ø4	2	2	2	2				
21	U505410000	EMBELLECEDOR CHIMENEA G-310	FLUE TRIM G-310	_	_	1	1				

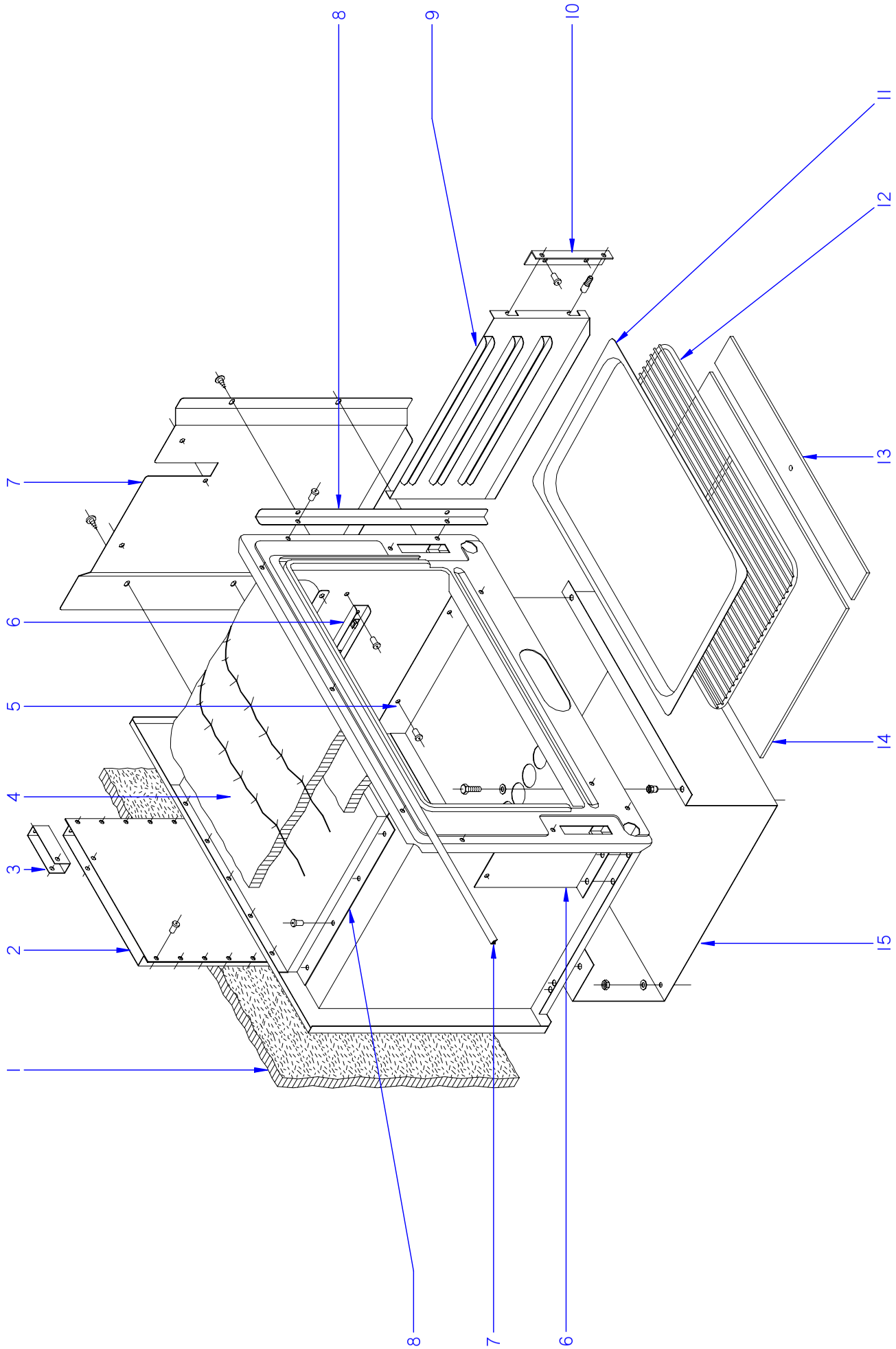

ITEM MARCADO EN COLOR = REPUESTO RECOMENDADO
COLOURED ITEM = RECOMMENDED SPARE PART

N plano	Firma	Fecha	Aparato		Lamina	
C-2166		2009-10	HORNO	COCINAS SNACK	2	Fagor Industrial S.Coop. Oñate

MOD.	COCINAS SNACK	ZONA	HORNO	PLANO	C-2166

ITEM	CODIGO	DENOMINACION	TEXTO	CG-210	CG-310						NOTAS
1	U325622000	AISLANTE 700x460	INSULATION 700x460	2	2						
2	U505615000	POSTERIOR DE CHIMENEA-310	FLUEPIPE REAR-310	1	1						
s/nº	U505614000	ANTERIOR DE CHIMENEA-310	FLUEPIPE FRONT-310	11	11						
	Q419005000	REMACHE 4X8 ALMG3 / ALUMINIO	RIVET 4X8 ALMG3 / ALUMINIUM	12	12						
	Q081365000	TOR. ALOMADO 4,8X19 H.ZINCADO	CURVED SCREW 4.8X19 H.ZINC	5	5						
3	U505619000	CHAPA REDUC. SALIDA GASES	GAS OUTPUT REDUC. PLATE	1	1						
4	U855620000	AISL. VITROFIB 1455X420X20AL1C	VITROFIB INS. 1455X420X20AL1C	1	1						
5	U505605000	BASE DE HORNO -310	OVEN BASE -310	1	1						
6	U055644000	CONJUNTO FIJACION BULBO	BULB FASTENING UNIT	1	1						
	Q151301000	PHILIPS 8X5/8	PHILIPS 8X5/8	2	2						
7	U502668000	CHAPA TAPA LATERAL HORNO	OVEN SIDE COVER PLATE	1	1						
	Q081365000	TOR. ALOMADO 4,8X19 H.ZINCADO	CURVED SCREW 4.8X19 H.ZINC	4	4						
8	U502810000	ESCUADRA CENTRAL VERTICAL	CENTRAL VERTICAL BRACKET	_	1						
	Q419005000	REMACHE 4X8 ALMG3 / ALUMINIO	RIVET 4X8 ALMG3 / ALUMINIUM	_	2						
9	U505639000	GUIA BANDEJA CAFETERIA	COFFEE MACHINE TRAY GUIDE	2	2						
10	U325611000	ESC.GUIA SOPORTE BANDEJAS	TRAY SUPPORT GUIDE BRACKE	2	2						
	Q419005000	REMACHE 4X8 ALMG3 / ALUMINIO	RIVET 4X8 ALMG3 / ALUMINIUM	4	4						
	Q151336000	TORNILLO SOPORTE GUIAS	GUIDE SUPPORT BOLT	4	4						
11	R252816000	BANDEJA 1/1 P:20	TRAY 1/1 P:20	1	1						
12	U015631000	PARRILLA DE HORNO	OVEN TRAY	1	1						
13	U505618500	CABEZA PLACA HORNO MECANZ	MACHINED OVEN PLATE HEAD	1	1						
14	U505617000	PLACA DE HORNO	OVEN PLATE	1	1						
15	U505640000	CALZO HORNO CAFETERIA	COFFEE MACHINE OVEN WEDGE	1	1						
	Q012031000	TORNILLO EXAGONAL M5X10	HEXAGONAL BOLT M5x10	4	4						
	Q232040000	ARANDELA A6	WASHER A6	4	4						
	Q221342000	REMACHE EXAGONAL M5	HEXAGONAL RIVET M5	2	2						
16	U325610000	CHAPA PROTECCION AISLANTE "	INSULATION PROTECTION PLAT	2	2						
	Q151301000	PHILIPS 8X5/8	PHILIPS 8X5/8	4	4						
17	U025623000	JUNTA PUERTA HORNO INOX	OVEN DOOR SEAL INOX.	1	1						
18	U505612000	CAMARA CONDUCC. HUMOS-310	SMOKE PIPE CHAMBER-310	1	1						
	Q419005000	REMACHE 4X8 ALMG3 / ALUMINIO	RIVET 4X8 ALMG3 / ALUMINIUM	4	4						

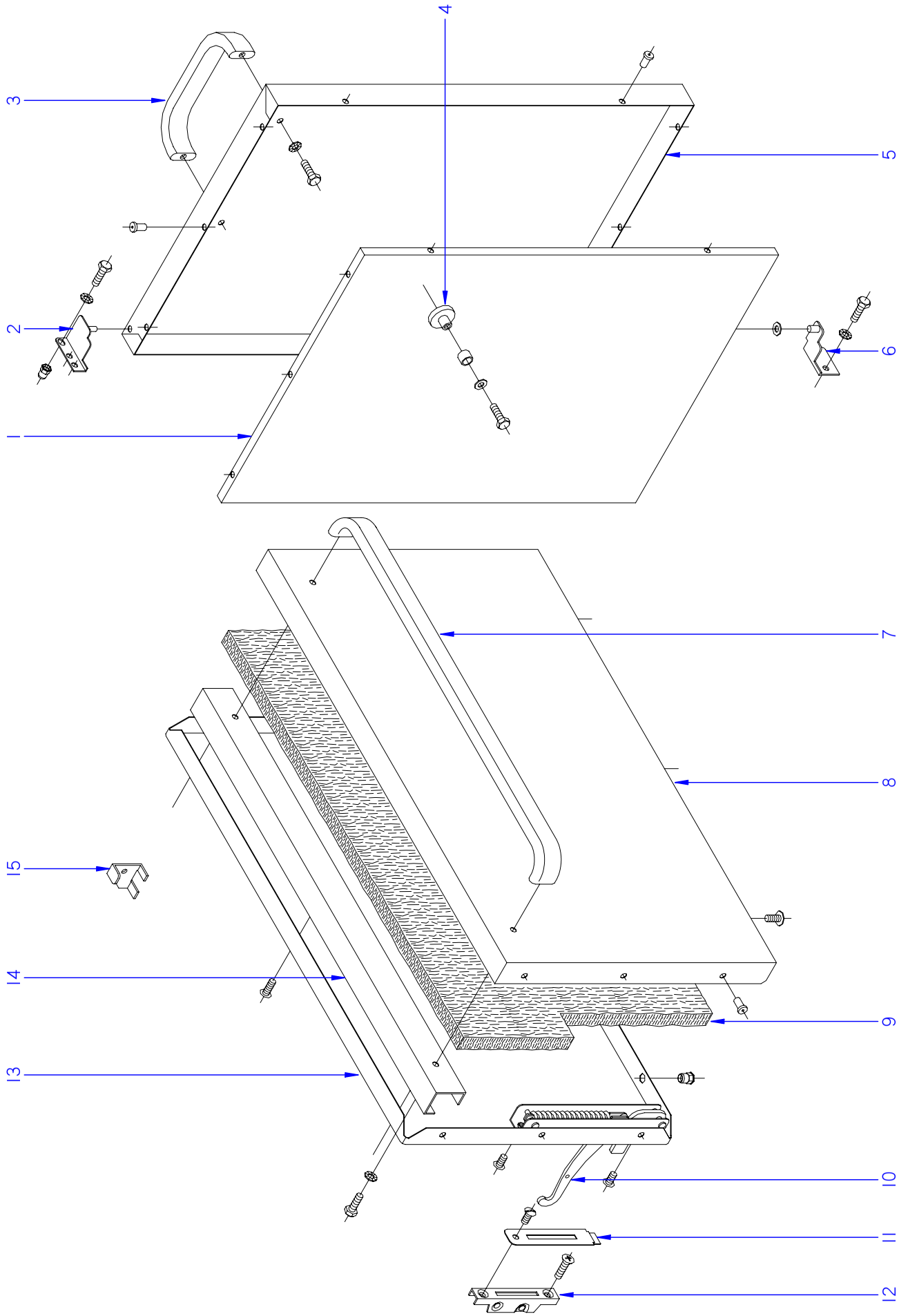

ITEM MARCADO EN COLOR = REPUESTO RECOMENDADO
COLOURED ITEM = RECOMMENDED SPARE PART

N plano	Firma	Fecha	Aparato		Lamina	
C-2167		2009-10	PUERTAS	COCINAS SNACK	3	Fagor Industrial S.Coop. Onate FAGOR

MOD.	COCINAS SNACK	ZONA	PUERTAS	PLANO	C-2167

ITEM	CODIGO	DENOMINACION	TEXTO	CG-210	CG-310						NOTAS
1	U500545000	CONTRAPUERTA DE PORTABOMB.	CAN. HOLDER DOOR REVERSE.	_	1						
2	U500541000	BISAGRA SUPERIOR COMPLETA	COMPLETE UPPER HINGE	_	1						
	Q012031000	TORN.EXA. M5X10 A.304	HEX BOLT M5X10 A.304	_	3						
3	Z400542000	ASA LVS	HANDLE LVS	_	1						
	Q012041000	TORNILLO EXAGONAL M6X10	HEXAGONAL BOLT M6x10	_	2						
	Q242040000	ARANDELA ABANICO A6 A.304	FAN WASHER A6 A.304	_	2						
4	X960501000	IMAN	MAGNET	_	2						
	X960502000	FIJACION IMAN	MAGNET ATTACHMENT	_	2						
	Q012021000	TORN.EXA. M4X10	HEX BOLT M4X10	_	2						
	Q232020000	ARANDELA A-4	WASHER A-4	_	2						
5	U260508000	PUERTA DE PORTABOMBONAS	CAN.HOLDER DOOR	_	1						
	Q419005000	REMACHE 4X8 ALMG3 / ALUMINIO	RIVET 4X8 ALMG3 / ALUMINIUM	_	6						
6	U500542000	BISAGRA INFERIOR COMPLETA	COMPLETE LOWER HINGE	_	1						
	Q012041000	TORNILLO EXAGONAL M6X10	HEXAGONAL BOLT M6x10	_	2						
	Q242040000	ARANDELA ABANICO A6 A.304	FAN WASHER A6 A.304	_	2						
	Q232040000	ARANDELA A6	WASHER A6	_	1						
7	Z720504000	ASA DE PUERTA	DOOR HANDLE	1	1						
	Q012041000	TORNILLO EXAGONAL M6X10	HEXAGONAL BOLT M6x10	2	2						
	Q242040000	ARANDELA ABANICO A6 A.304	FAN WASHER A6 A.304	2	2						
8	U260507000	PUERTA DE HORNO COC.CAFETE.	COFF.MACH. OVEN DOOR	1	1						
	Q419005000	REMACHE 4X8 ALMG3 / ALUMINIO	RIVET 4X8 ALMG3 / ALUMINIUM	6	6						
9	U260502000	AISLANTE 680X380X20	INSULATION 680X380X20	1	1						
10	U020528000	BISAGRA CIERRE HORNO	OVEN LOCK HINGE	2	2						
	Q152022000	TORNILLO M.6X8	BOLT M.6X8	6	6						
11	U010510000	EMBELLECEDOR GUIA BISAGRA	HINGE GUIDE TRIM	2	2						
	Q152017000	TORNILLO AMARRE M6X13 A304	FASTENING BOLT M6X13 A304	2	2						
12	U010512000	GUIA DE BISAGRA	HINGE GUIDE	2	2						
	Q042043000	TORNILLO AVELLANADO M6X20	COUNTERSUNK BOLT M6x20	2	2						
13	U020522000	CONTRAPUERTA HORNO	OVEN DOOR REVERSE	1	1						
	Q221343000	REMACHE EXAGONAL M6	HEXAGONAL RIVET M6	3	3						
	Q152017000	TORNILLO AMARRE M6X13 A304	FASTENING BOLT M6X13 A304	6	6						

MOD.	COCINAS SNACK	ZONA	PUERTAS	PLANO	C-2167

ITEM	CODIGO	DENOMINACION	TEXTO	CG-210	CG-310						NOTAS
14	U320507000	REFUERZO DE PUERTA	DOOR REINFORCEMENT	1	1						
15	U746501000	ESCUADRA MONTAJE PUERTA	DOOR ASSEMBLY BRACKET	2	2						

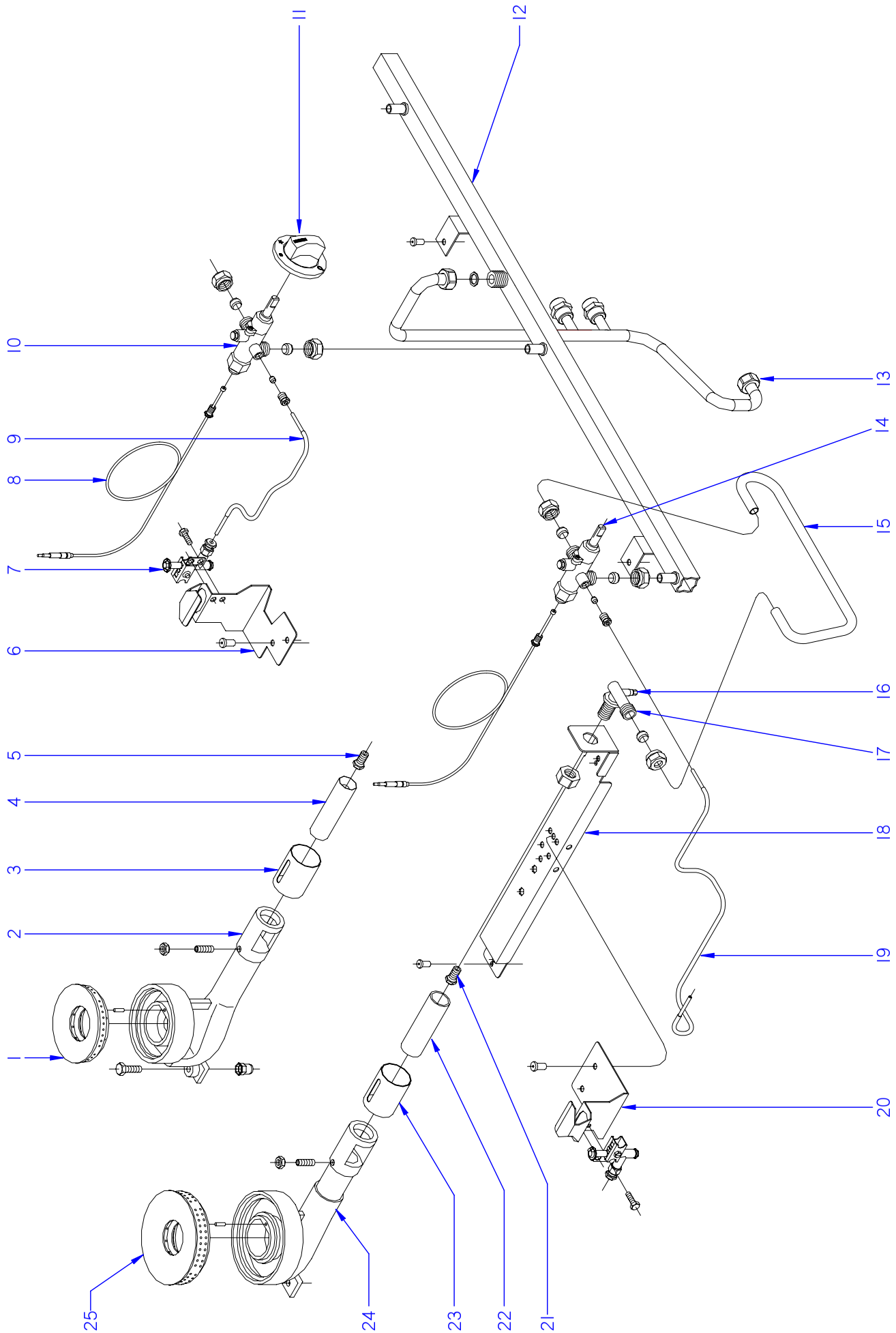

ITEM MARCADO EN COLOR = REPUESTO RECOMENDADO
COLOURED ITEM = RECOMMENDED SPARE PART

N plano	Firma	Fecha	Aparato	Lamina	
C-2168		2009-10	CONJUNTO FUNCIONAL MESA COCINAS SNACK	4	Fagor Industrial S.Coop. Oñate

COCINAS SNACK	ZONA	CONJUNTO FUNCIONAL MESA	C-2168

ITEM	CODIGO	DENOMINACION	TEXTO	CG-200 S	CG-300 S	CG-210	CG-310				
1	U445731000	QUEMADOR 4000 Kcal/H	BURNER 4000 Kcal/H	1	2	1	2				
	Q371026000	MANGUITO SUJEC. 4X14 DIN1481	HOSE FASTENING 4X14 ØIN1481	1	2	1	2				
2	U445730000	CUERPO QUEMADOR 4000 011	BURNER BODY 4000 011	1	2	1	2				
	Q131542000	VARILLA ROSCADA M6X15	THREADED ROD M6X15	1	2	1	2				
	Q162040000	TUERCA EXAGONAL M6	HEXAGONAL NUT M6	1	2	1	2				
	Q012044000	TORNILLO EXAGONAL M6X25	HEXAGONAL BOLT M6x25	1	2	1	2				
3	U265702000	REGULADOR AIRE	AIR CONTROLLER	1	2	1	2				
4	U125720000	VENTURI QUEMADOR 4000 kcl	VENTURI BURNER 4000 kcl	1	2	1	2				
5	U122407000	TOBERA DE Ø 1.05 B.P.	NOZZLE Ø 1.05 B.P.	1	2	1	2				
5	9105100000	TOBERA DE Ø 1.50 G.N.	NOZZLE Ø 1.50 G.N.	1	2	1	2				
6	U505440000	SOPORTE PILOTO 4000	PILOT SUPPORT 4000	1	2	1	2				
7	11U4421340	PILOTO	PILOT	2	3	2	3				
	U442137000	INYECTOR Ø 0.4 GN	INJECTOR Ø 0.4 GN.	2	3	2	3				
	Q012021000	TORNILLO EXAGONAL M4X10	HEXAGONAL BOLT M4x10	3	6	3	6				
8	U222130000	TERMOPAR L=600	THERMOCOUPLE L=600	2	3	2	3				
9	U505042000	CONDUCCION PILOTO CONTROL	PILOT CONTROL PIPE	1	2	1	2				
	U195009000	MANGUITO EMPALME	CONNECTION HOSE	1	2	1	2				
	X205028000	BICONO Ø6	BICONE Ø6	1	2	1	2				
10	U249401000	GRIFO CAL 3200 0.55	HW TAP 3200 0.55	1	2	1	2				
	U055043000	BICONO Ø12	BICONE Ø12	4	6	4	6				
	Q221336000	TUERCA M18X1,5 Ø12	NUT M18X1.5 Ø12	2	3	2	3				
11	U542101000	BOTON DE MANDO Ø10	CONTROL BUTTON Ø10	2	3	2	3				
12	U515010000	CONDUCCION GENERAL CG-210	GENERAL PIPING CG-210	1	_	1	_				
12	U525032000	CONDUCCION GENERAL CG-300	GENERAL PIPING CG-300	_	1	_	_				
12	U505045000	CONDUCCION GENERAL CG-310	GENERAL PIPING CG-310	_	_	_	1				
	Q152004000	TORNILLO APLASTADO M5X13	FLAT HEAD SCREW M5X13	4	4	4	4				
	U505008000	TAPON 20X1 -310 EXT	COVER 20X1 -310 EXT	1	1	1	1				
13	U525031000	TUBO DISTRIBUIDOR	DISTRIBUTOR PIPE	1	1	_	_				
13	U515049000	TUBO DISTRIBUIDOR CG210	DISTRIBUTOR PIPE CG210	_	_	1	_				
13	U505082000	TUBO DISTRIBUIDOR CG310	DISTRIBUTOR PIPE CG310	_	_	_	1				
	U525003000	ANGULO PORTAGOMAS	RUBBER HOLDER BRACKET	1	2	_	2				

COCINAS SNACK	ZONA	CONJUNTO FUNCIONAL MESA	C-2168

ITEM	CODIGO	DENOMINACION	TEXTO	CG-200 S	CG-300 S	CG-210	CG-310				
14	U249402000	GRIFO CAL 3200 0.90	HW TAP 3200 0.90	1	1	1	1				
	X205028000	BICONO Ø6	BICONE Ø6	1	1	1	1				
	U195009000	MANGUITO EMPALME	CONNECTION HOSE	1	1	1	1				
15	U505044000	CONDUCCION A QUEMADOR	PIPING TO BURNER	2	3	2	3				
16	Q153002000	TORNILLO TAPON	CAP BOLT	2	3	2	3				
17	U325019000	PORTATOBERAS HORNO	OVEN NOZZLE HOLDER	2	3	2	3				
	U055043000	BICONO Ø12	BICONE Ø12	2	3	2	3				
	Q221336000	TUERCA M18X1,5 Ø12	NUT M18X1.5 Ø12	2	3	2	3				
18	U502609000	SOPORTE CUERPO QUEMADOR	BURNER BODY SUPPORT	2	3	2	3				
	Q221343000	REMACHE EXAGONAL M6	HEXAGONAL RIVET M6	2	3	2	3				
	Q012031000	TORNILLO EXAGONAL M5X10 A.304	HEXAGONAL BOLT M5X10 A.304	4	6	4	6				
	U565011000	TUERCA GUIA	GUIDE NUT	2	3	2	3				
19	U505040000	TUBO PILOTO 6000	PILOT PIPE 6000	1	1	1	1				
20	U445441000	SOPORTE PILOTO 8000	PILOT SUPPORT 8000	1	1	1	1				
21	R422400000	TOBERA DE Ø 1.25 B.P.	NOZZLE Ø 1.25 B.P.	1	1	1	1				
21	9429500000	TOBERA DE Ø 1.90 G.N.	NOZZLE Ø 1.90 G.N.	1	1	1	1				
22	U565700000	VENTURI QUEMADOR 8000	VENTURI BURNER 8000	1	1	1	1				
23	U265702000	REGULADOR AIRE	AIR CONTROLLER	1	1	1	1				
24	U565701000	CUERPO QUEM. 8000 PIN-MEC	BURNER BODY 8000 PAINT-MAC	1	1	1	1				
25	U135702500	QUEMADOR 8000 MESA	BURNER 8000 BENCH	1	1	1	1				
	Q371026000	MANGUITO SUJEC. 4X14 DIN1481	HOSE FASTENING 4X14 ØIN1481	1	1	1	1				

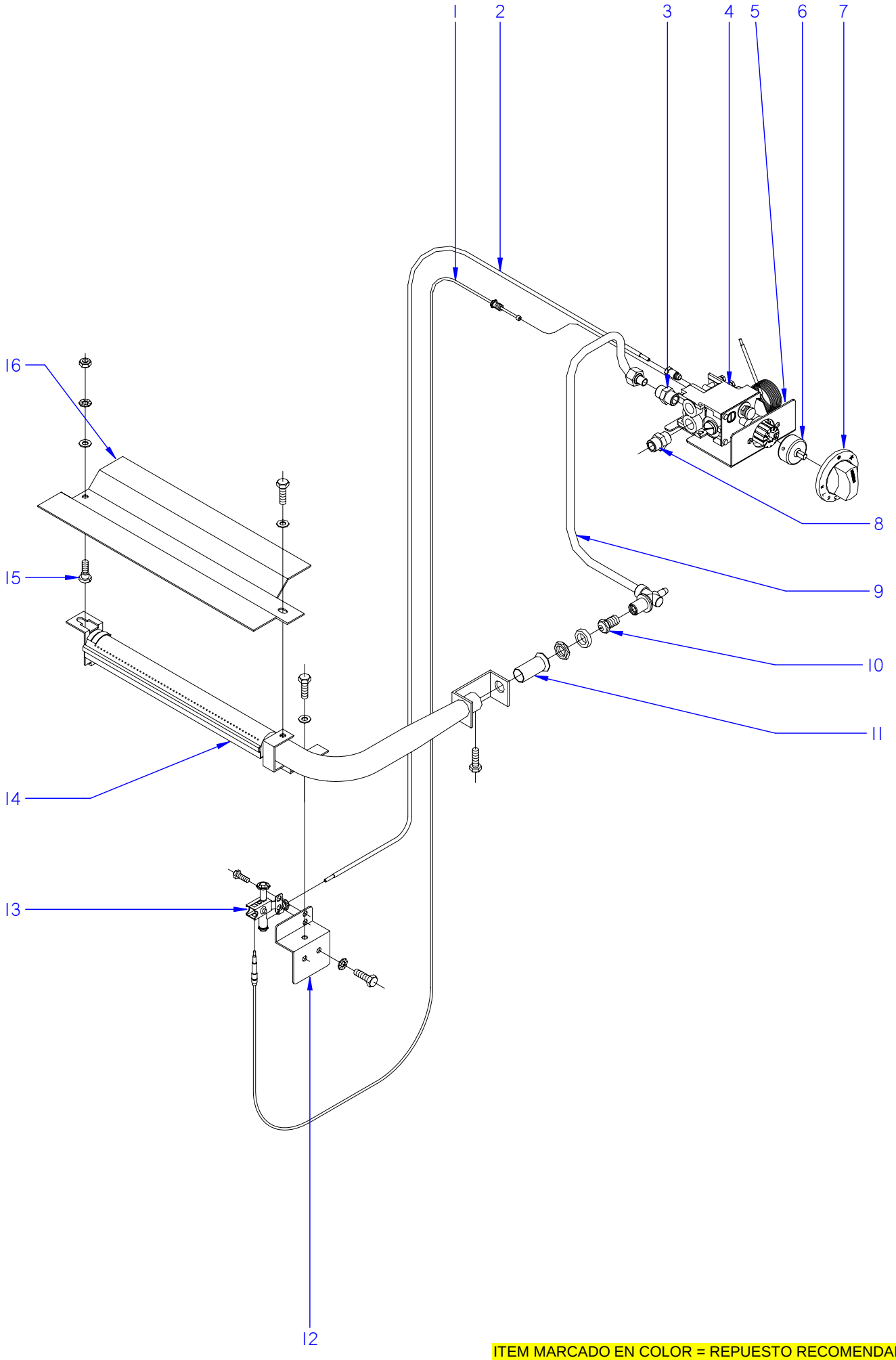

ITEM MARCADO EN COLOR = REPUESTO RECOMENDADO
COLOURED ITEM = RECOMMENDED SPARE PART

N plano	Firma	Fecha	Aparato		Lamina	
C-2169		2009-10	CONJUNTO FUNCIONAL HORNO	COCINAS SNACK	5	Fagor Industrial S.Coop. FAGOR Oñate

COCINAS SNACK	ZONA	CONJUNTO FUNCIONAL HORNO	C-2169

ITEM	CODIGO	DENOMINACION	TEXTO	CG-210	CG-310						
1	U562130000	TERMOPAR L=850	THERMOCOUPLE L=850	1	1						
2	U505081000	TUBO PILOTO	PILOT PIPE	1	1						
	U134323000	RACORD BICONO 6 958.031	BICONE CONNECTION 6 958.031	1	1						
3	R155068000	MANGUITO 3/8"	HOSE 3/8"	1	1						
4	T982100000	VALVULA 630 EUR 630.343	VALVE 630 EUR 630.343	1	1						
	T982102000	TAPON 3/8 972.061	CAP 3/8 972.061	2	2						
	Q306058000	ARANDELA 23,5X17,60X1,5	WASHER 23.5X17.60X1.5	2	2						
5	U505080000	SOPORTE VALVULA DE GAS	GAS VALVE BRACKET	1	1						
6	U842100000	SUPLEMENTO PARA EUROSIT	SUPPLEMENT FOR EUROSIT	1	1						
	Q131502000	VARILLA ROSCADA 5X6	THREADED ROD 5X6	3	3						
7	U842102000	BOTON DE MANDO Ø 8	CONTROL BUTTON Ø 8	1	1						
8	U875017000	MANGUITO R 3/8"-R1/2"	HOSE R 3/8"-R1/2"	1	1						
9	U505078000	CONDUCCION QUEMADOR COM.	COMP. BURNER PIPE	1	1						
	Q153002000	TORNILLO TAPON	CAP BOLT	1	1						
10	U012401000	TOBERA DE Ø 1.15 B.P.	NOZZLE Ø 1.15 B.P.	1	1						
10	N502401000	TOBERA DE Ø 1,70 G.N.	NOZZLE Ø 1.70 G.N.	1	1						
	Q301323000	ARANDELA 25X17X6	WASHER 25X17X6	1	1						
	Q223019000	TUERCA 3/8 GAS LATÓN	NUT 3/8 GAS BRASS	1	1						
11	U325707000	REGULADOR AIRE (QUEMADOR)	AIR CONTROL (BURNER)	1	1						
	Q012031000	TORNILLO EXAGONAL M5X10	HEXAGONAL BOLT M5x10	1	1						
12	U505630000	SOPORTE PILOTO HORNO	OVEN PILOT SUPPORT	1	1						
	Q012041000	TORNILLO EXAGONAL M6X10	HEXAGONAL BOLT M6x10	2	2						
	Q242040000	ARANDELA ABANICO A6 A.304	FAN WASHER A6 A.304	2	2						
	Q232040000	ARANDELA A6	WASHER A6	2	2						
13	11U4421340	PILOTO	PILOT	1	1						
	U442137000	INYECTOR Ø 0.4 GN	INJECTOR Ø 0.4 GN.	1	1						
	Q012021000	TORNILLO EXAGONAL M4X10	HEXAGONAL BOLT M4x10	2	2						
14	U505730000	QUEMADOR COMP.HORNO M-310	OVEN COMP. BURNER M-310	1	1						
15	R252624000	PITON SOPORTE	SPIKE SUPPORT	1	1						

COCINAS SNACK	ZONA	CONJUNTO FUNCIONAL HORNO	C-2169

ITEM	CODIGO	DENOMINACION	TEXTO	CG-210	CG-310						
16	U505704000	DIFUSOR QUEMADOR HOR.-310	OVEN BURNER DIFFUSER.-310	1	1						
	Q012041000	TORNILLO EXAGONAL M6X10	HEXAGONAL BOLT M6x10	1	1						
	Q242040000	ARANDELA ABANICO A6 A.304	FAN WASHER A6 A.304	1	1						
	Q232040000	ARANDELA A6	WASHER A6	1	1						
	Q162040000	TUERCA EXAGONAL M6	HEXAGONAL NUT M6	1	1						

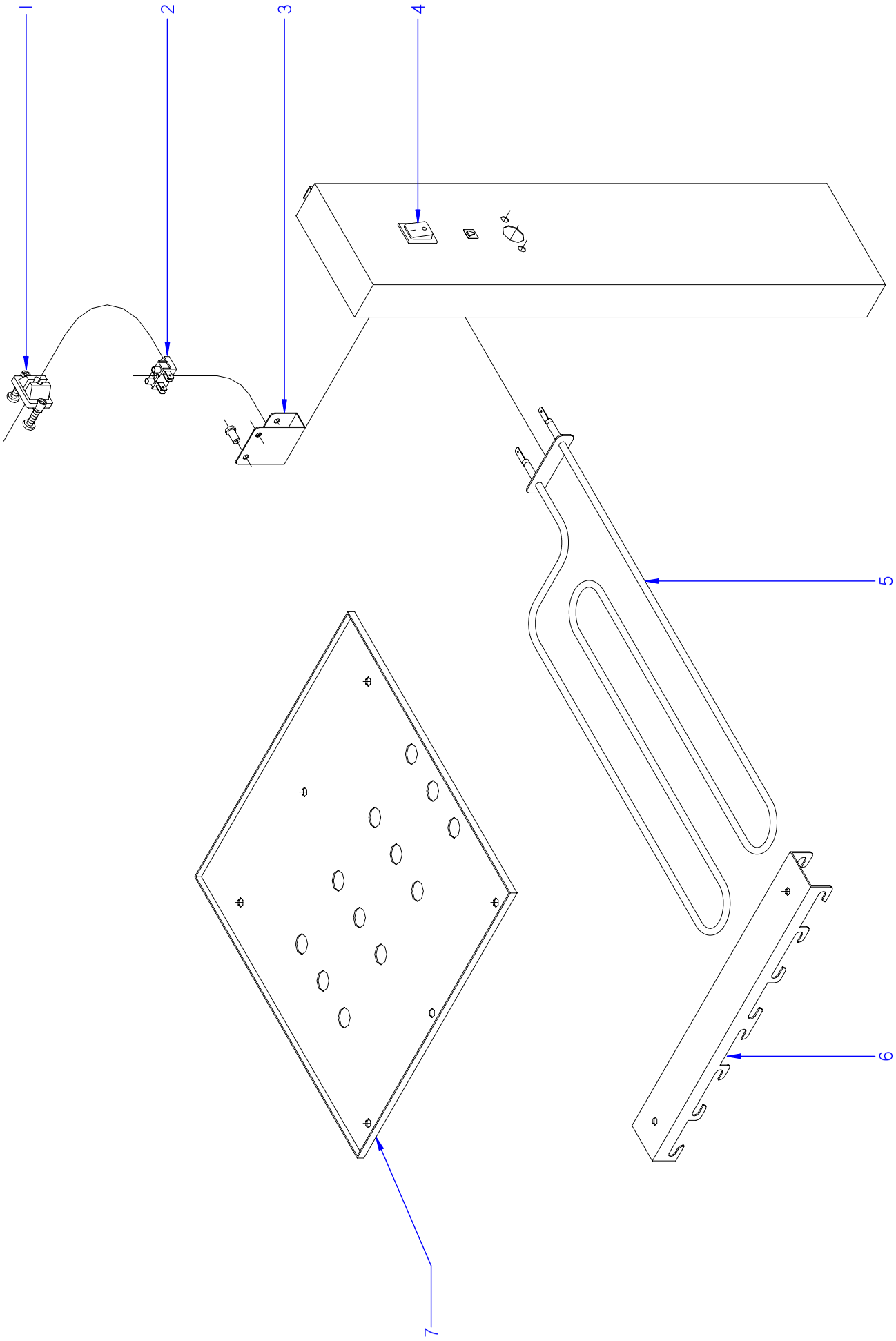

ITEM MARCADO EN COLOR = REPUESTO RECOMENDADO
COLOURED ITEM = RECOMMENDED SPARE PART

N plano	Firma	Fecha	Aparato		Lamina	
C-2170		2009-10	CONJUNTO FUNCIONAL GRILL	COCINAS SNACK	6	Fagor Industrial S.Coop. Oñate FAGOR

COCINAS SNACK	ZONA	CONJUNTO FUNCIONAL GRILL	C-2170

ITEM	CODIGO	DENOMINACION	TEXTO	CG-210 G	CG-310 G						
1	Z203020000	RETENEDOR DE CABLE	CABLE HOLDER	1	1						
2	Z603025000	REGLETA DE CONEXIONES	CONNECTION STRIP	1	1						
3	U502658000	SOPORTE REGLETA	TERMINAL STRIP SUPPORT	1	1						
4	Z203033000	INTERRUPTOR GENERAL	POWER SWITCH	1	1						
5	U803004000	RESISTENCIA 1000W-230V	RESISTOR 1000W -230V	2	2						
6	U502650000	ESCUADRA SOPORTE RESISTEN.	RESIST. SUPPORT BRACKET	1	1						
7	U502656000	REFUERZO TECHO HORNO	OVEN CEILING REINFORCEMENT	1	1						
	Z603041000	CABLE ALIMENTACION	SUPPLY CABLE	1	1						
	U503022000	INSTALACION ELECTRICA	ELECTRIC INSTALLATION	1	1						
	U503020000	ESQUEMA ELECTRICO	ELECTRICAL DIAGRAM	1	1						PLANO HB-71538
	U503021000	PLANO DE MONTAJE	ASSEMBLY PLAN	1	1						PLANO HB-71541

MOD.	COCINA SNACK	ZONA	VARIOS	PLANO	

ITEM	CODIGO	DENOMINACION	TEXTO	CG-200 S	CG-300 S	CG-210	CG-310				NOTAS
	U506521000	FOLLETO INSTRUCCIONES	INSTRUCTION LEAFLET	1	1	1	1				

MOD.	COCINA SNACK	ZONA	PIEZAS ESPECIFICAS PARA LOS DISTINTOS GASES	PLANO	

ITEM	CODIGO	DENOMINACION	TEXTO	CG-200 S	CG-300 S	CG-210	CG-310				NOTAS
		BUTANO PROPANO	**BUTANE PROPANE**								
5	U122407000	TOBERA DE Ø 1.05 B.P.	NOZZLE Ø 1.05 B.P.	1	2	1	2				C-2168
21	R422400000	TOBERA DE Ø 1.25 B.P.	NOZZLE Ø 1.25 B.P.	1	1	1	1				C-2168
10	U012401000	TOBERA DE Ø 1.15 B.P.	NOZZLE Ø 1.15 B.P.	_	_	1	1				C-2169
S/Nº	U136501000	INDICADOR BUTANO-PROPANO	INDICATOR BUTANE-PROPANE	1	1	1	1				
		GAS NATURAL	**NATURAL GAS**								
5	9105100000	TOBERA DE Ø 1.50 G.N.	NOZZLE Ø 1.50 G.N.	1	2	1	2				C-2168
21	9429500000	TOBERA DE Ø 1.90 G.N.	NOZZLE Ø 1.90 G.N.	1	1	1	1				C-2168
10	N502401000	TOBERA DE Ø 1,70 G.N.	NOZZLE Ø 1.70 G.N.	_	_	1	1				C-2169
S/Nº	U134402000	INDICADOR GAS-NATURAL	INDICATOR GAS-NATURAL	1	1	1	1				