ICE MACHINES

SC 20

R 134 A VERSION
“J” SERIES

SPARE PARTS LIST
CATALOGO RICAMBI
CATALOGUE PIÈCES DÉTACHÉES
ERSATZTEILENKATALOG

090090.07 REV. 03/2007

PAGE PAGINA PAGE SEITE	TABLE OF CONTENTS	INDICE	TABLE DES MATIERES	INHALTVERZEICHNIS
1	TABLE OF CONTENTS	INDICE	TABLE DES MATIERES	INHALTVERZEICHNIS
2/3	UNIT PANELS	ASSIEME MOBILE	ENS. CAROSSERIE	MACHINE GEHAUSE
4/5	REFRIGERANT SYSTEM AIR COOLED	SISTEMA REFRIGERANTE RAFFR. AD ARIA	CIRCUIT FRIGORIFIQUE REFROID. PAR AIR	GEFRIERSYSTEM LUFTGEKUEHLT
6/7	REFRIGERANT SYSTEM WATER COOLED	SISTEMA REFRIGERANTE RAFFR. AD ACQUA	CIRCUIT FRIGORIFIQUE REFROID. PAR EAU	GEFRIERSYSTEM WASSERGEKUEHLT
8/9	WATER SYSTEM	CIRCUITO IDRAULICO	CIRCUIT HYDRAULIQUE	WASSER SYSTEM
10/11	CONTROL BOX	SCATOLA DI CONTROLLO	BOITE ELECTRIQUE	SCHALTSCHRANK
12	COMPRESSOR AND ELECTRIC COMPONENT CHARTS	TABELLA COMPRESSORI E COMPONENTI ELETTRICI	LISTE DES COMPRESSEURS ET COMPOSANTS ELECTRIQUE	KOMPRESSOR UND ELEKTRISCHER TEILLISTE

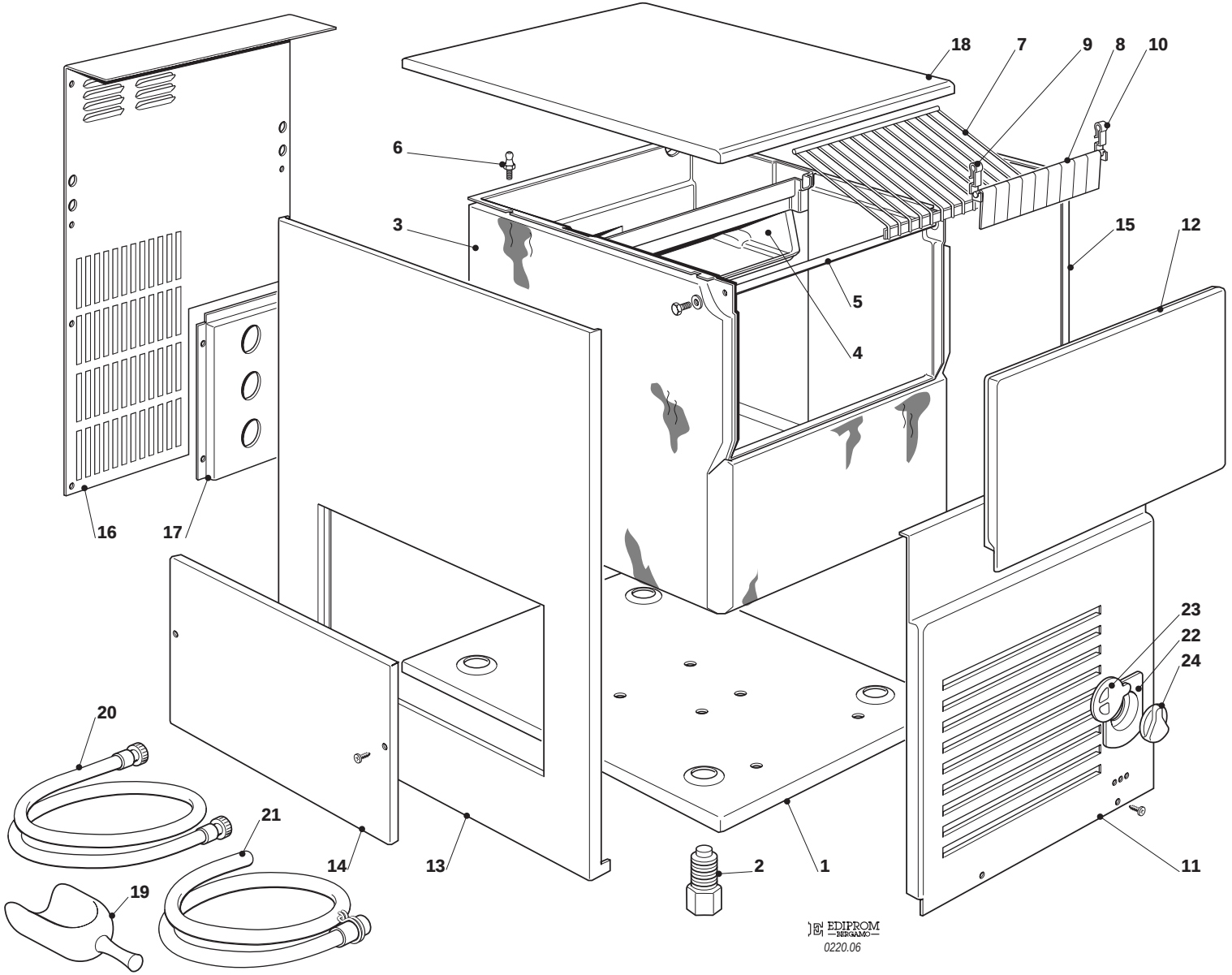
18
7
9
8
10
6
3
15
12
5
4
16
17
23
22
24
20
21
14
13
2
1
11
19
EDIPROM
BERGAMO
0220.06

SC 20 - UNIT PANELS - ASSIEME MOBILE - ENS. CARROSSERIE - MACHINE GEHAUSE

ITEM NO POS NO REP. NO REF. NO	PART NO CODICE REFERENCE STUECK NR	DESCRIPTION	DESCRIZIONE	DESIGNATION	BESCHREIBUNG
1	702245 00	BASE	PIASTRINA DI BASE	PLAQUE DE BASE	GRUNDPLATTE
2	650382 01	LEG	PIEDE REGOLABILE	PIED RÉGLABE	GERÄTEFUSS
3	782093 00R	INSULATED BIN ASSY	ASSIEME CELLA ISOLATA	ENS. CABINE	ISOLIEREISSPEICHER
4	660627 01	EVAPORATOR HOUSING	INVOLUCRO EVAPORATORE	CHAMBRE INTERIEUR	CELLE INTERN
5	732016 06	BIN DOOR BRACKET	ASTA PORTELLO	TIGE PORTE	KLAPPENACHSE
6	650790 00	STUD	PERNO	AXE	STIFT
7	650852 00	ICE DEFLECTOR	GRIGLIA SCORRIMENTO CUBETTI	GRILLE GLISSEMENT GLAÇON	ABGLEITGRILL
8	783171 00R	CURTAIN ASSY	ASSIEME TENDINA	ENS. LAMELLE	ABDECKKLAPPE GESAMTHEIT
9	660388 00	LEFT CURTAIN SUPPORT	SUPP. TENDINA SINISTRO	SUPP. LAMELLE GAUCHE	LINKE ABDECKLAPPE HALTERUNG
10	660388 01	RIGHT CURTAIN SUPPORT	SUPP. TENDINA DESTRO	SUPP. LAMELLE DROITE	RECHTE ABDECKLAPPE HALTERUNG
11	721872 00	FRONT PANEL S.S.	PANNELLO ANTERIORE INOX	PANNEAU AVANT ACIER INOX	VORDERWAND EDELSTAHL
12	782092 04R	BIN DOOR	SPORTELLO	PORTE CABINE	SPEICHERTUER
13	721834 00	LEFT SIDE PANEL S.S.	PANNELLO SINISTRO INOX	JOUE GAUCHE ACIER INOX	LINKE GEHÄUSESEITE EDELSTAHL
14	702026 02	SERVICE PANEL	PANNELLO DI ISPEZIONE	PANNEAU DE SERVICE	SERVICE PANEL
15	721833 00	RIGHT SIDE PANEL S.S.	PANNELLO DESTRO INOX	JOUE DROITE ACIER INOX	RECHTEGEHÄUSESEITE EDELSTAHL
16	702309 00	REAR PANEL	PANNELLO POSTERIORE	PANNEAU POSTERIEUR	HINTERE ABDECKUNG
17	702301 00	METAL BRACKET FOR FITTING	SUPPORTO ATTACCHI	SUPPORT DE RACCORDS	METALLTRÄGER
18	781432 00R	TOP PANEL S.S.	PANNELLO SUPERIORE INOX	ENS. COUVERCLE	DECKEL GESAMTHEIT
19	650071 00	ICE SCOOP	SESSOLA	SASSE	EISSCHAUFEL
20	060513 00	KIT WATER SUPPLY PIPE	KIT TUBO ALIM. ACQUA	KIT TUYAU D'ALIM. EAU	WASSER ANSCHLUSSCHLAUCH
21	060513 01	KIT WATER DRAIN PIPE	KIT TUBO SCARICO ACQUA	KIT TUYAU VIDANGE EAU	WASSER SLAUFSCHLAUCH
22	660717 00	PLASTIC HOUSING	ALLOGGIAMENTO TERM.	ENCADREMENT THER.	THERM. PLASTIK SITZ
23	660715 00	PLASTIC COVER	COPERCHIO	COUVERCLE	DECKEL
24	660716 00	PLASTIC KNOB	MANOPOLA	POIGNE	KNOPF
*	650806 00	REAR STUD	PERNO POSTERIORE	AXE ARRIÉRE	TRÄGEN - HINTEN
*	650805 00	SIMAG LOGO	TARGHETTA SIMAG	EMBLEME SIMAG	SIMAG ABGEBILDET
*	650805 44	SC 20 LOGO	TARGHETTA SC 20	EMBLEME SC 20	SC 20 ABGEBILDET

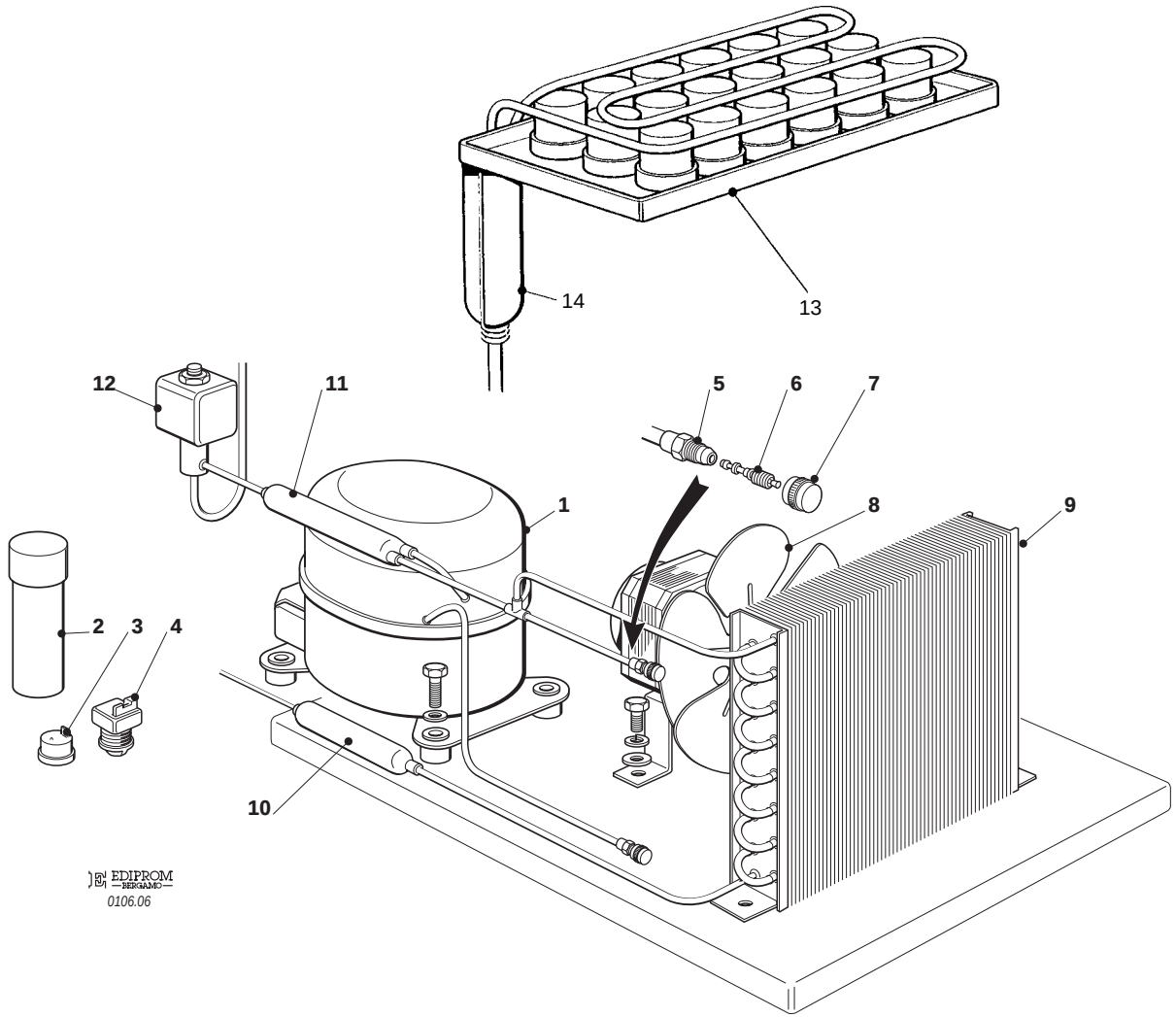
14
13
12
11
5
6
7
1
8
9
2
3
4
10
EDIPROM
BERGAMO
0106.06

SC 20 - REFRIGERANT SYSTEM AIR COOLED - SISTEMA REFRIGERANTE RAFFR. AD ARIA
CIRCUIT FRIGORIFIQUE REFROID. PAR AIR - LUFTGEKÜHLT GEFRIERSYSTEM

ITEM NO POS NO REP. NO REF. NO	PART NO CODICE REFERENCE STUECK NR	DESCRIPTION	DESCRIZIONE	DESIGNATION	BESCHREIBUNG
1	670097 08	COMPRESSOR	COMPRESSORE	COMPRESSEUR	KOMPRESSOR
2	620167 29	START CAPACITOR	CONDENSATORE D'AVVIAMENTO	CAPACITE DE DEMARRAGE	START KONDENSATOR
3	620058 65	PROTECTOR	PROTETTORE	PROTECTEUR	SCHUTZGERAT
4	620057 35	RELAY	RELE'	RELAIS	RELAIS
5	650109 02	VALVE BODY	CORPO VALVOLA	CORPS DE VANNE	VENTILGEHAUSE
6	670012 00	VALVE PISTON	PISTONCINO VALVOLA	PISTON	VENTILKOLBEN
7	650106 00	VALVE CAP	CAPPUCCIO VALVOLA	CAPUCHON DE VANNE	VENTILKLAPPE
8	620419 02 620419 32	FAN MOTOR FAN BLADE	MOTOVENTILATORE VENTOLA	MOTO-VENTILATEUR HELICE	LÜFTERMOTOR FLUGEL
9	620285 00	AIR COOLED CONDENSER	CONDENSATORE AD ARIA	CONDENSEUR	KONDENSATOR
10	630003 05	DRIER	FILTRO DEUMIDIFICATORE	FILTRE DESHYDRATEUR	TROCKNER
11	630137 00	MECHANICAL FILTER	FILTRO MECCANICO	FILTRE MECANIQUE	MECHANISCHFILTERN
12	620306 48 620306 14	HOT GAS VALVE COIL HOT GAS VALVE BODY	BOBINA VALVOLA GAS CALDO CORPO VALVOLA GAS CALDO	BOBINE VANNE GAZ CHAUD CORP VANNE GAZ CHAUD	HEISSGAZ VENTIL SPULE VENTILGEHAUSE
13	784605 00	EVAPORATOR ASSY	ASSIEME EVAPORATORE	ENS. EVAPORATEUR	VERDAMPFER
14	784444 07	ACCUMULATOR ASSY	ASSIEME ACCUMULATORE	ENS. ACCUMULATEUR	SAMMLER UND SAUGLEITUNGEN

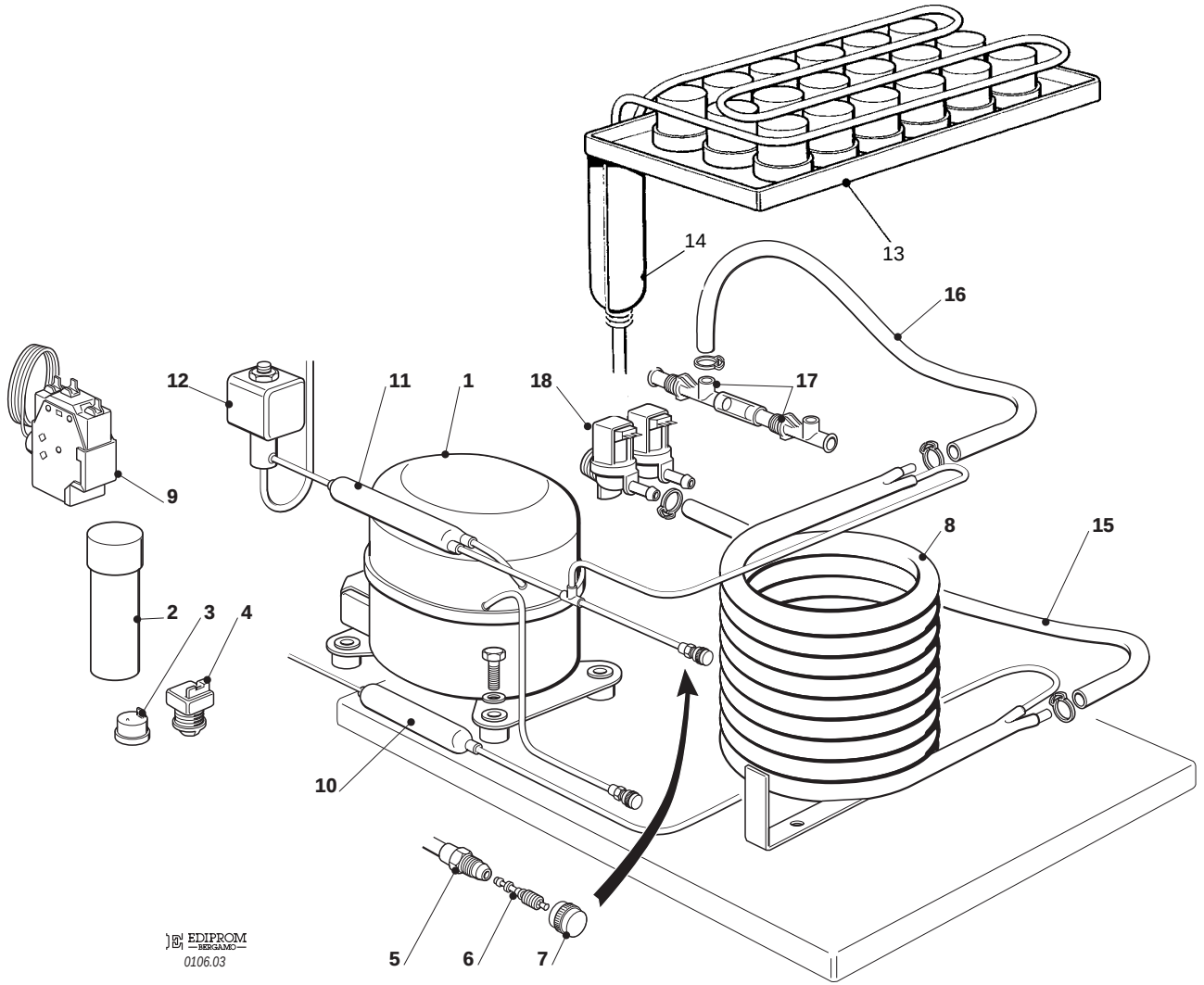
13
14
16
12
11
1
18
17
9
8
15
2
3
4
10
5
6
7
EDIPROM
BERGAMO
0106.03

SC 20 - REFRIGERANT SYSTEM WATER COOLED - SISTEMA REFRIGERANTE RAFFR. AD ACQUA
CIRCUIT FRIGORIFIQUE REFROID. PAR EAU - WASSERGEKÜHLT GEFRIERSYSTEM

1	670097 08	COMPRESSOR	COMPRESSORE	COMPRESSEUR	KOMPRESSOR
2	620167 29	START CAPACITOR	CONDENSATORE D'AVVIAMENTO	CAPACITE DE DEMARRAGE	START CONDENSATOR
3	620058 65	PROTECTOR	PROTETTORE	PROTECTEUR	SCHUTZGERAT
4	620057 35	RELAY	RELE'	RELAIS	RELAIS
5	650109 02	VALVE BODY	CORPO VALVOLA	CORPS DE VANNE	VENTILGEHAUSE
6	670012 00	VALVE PISTON	PISTONCINO VALVOLA	PISTON	VENTILKOLBEN
7	650106 00	VALVE CAP	CAPPUCCIO VALVOLA	CAPUCHON DE VANNE	VENTILKLAPPE
8	620389 02	WATER COOLED CONDENSER	CONDENSATORE ACQUA	CONDENSEUR A EAU	WASSER KONDENSATOR
9	620075 05*	PRESSURE CONTROL	PRESSOSTATO	PRESSOSTAT	PRESSOSTAT
10	630003 05	DRIER	FILTRO DEUMIDIFICATORE	FILTRE DESHYDRATEUR	TROCKNER
11	630137 00	MECHANICAL FILTER	FILTRO MECCANICO	FILTRE MECANIQUE	MECHANISCHFILTERN
12	620306 48 620306 14	HOT GAS VALVE COIL HOT GAS VALVE BODY	BOBINA VALVOLA GAS CALDO CORPO VALVOLA GAS CALDO	BOBINE VANNE GAZ CHAUD CORP VANNE GAZ CHAUD	HEISSGAZ VENTIL SPULE VENTILGEHAUSE
13	784605 00	EVAPORATOR	EVAPORATORE	EVAPORATEUR	VERDAMPFER
14	784444 07	ACCUMULATOR ASSY	ASSIEME ACCUMULATORE	ENS. ACCUMULATEUR	SAMMLER UND SAUGLEITUNGEN
15	281900 01	PLASTIC TUBE - PER METER	TUBO PVC - PER METRO	TUYAU EN PLASTIQUE - POUR MT.	PLASTIK ROHR - PRO METER
16	281900 01	PLASTIC TUBE - PER METER	TUBO PVC - PER METRO	TUYAU EN PLASTIQUE - POUR MT.	PLASTIK ROHR - PRO METER
17	660224 00	WATER DRAIN FITTING	RACCORDO SCARICO ACQUA	RACCORD EVACUATION EAU	WASSERABFLUSSANSCHLUSSE
18	650105 70	WATER INLET VALVE	ELETTROVALVOLA DOPPIA	VANNE ARRIVÉE EAU	ELEKTROVENTIL
	* 620499 01	FROM SERIAL NUMBER NG 967	DA MATRICOLA NG 967	A PARTIR DU N.S. NG 967	VON S.N. NG 967

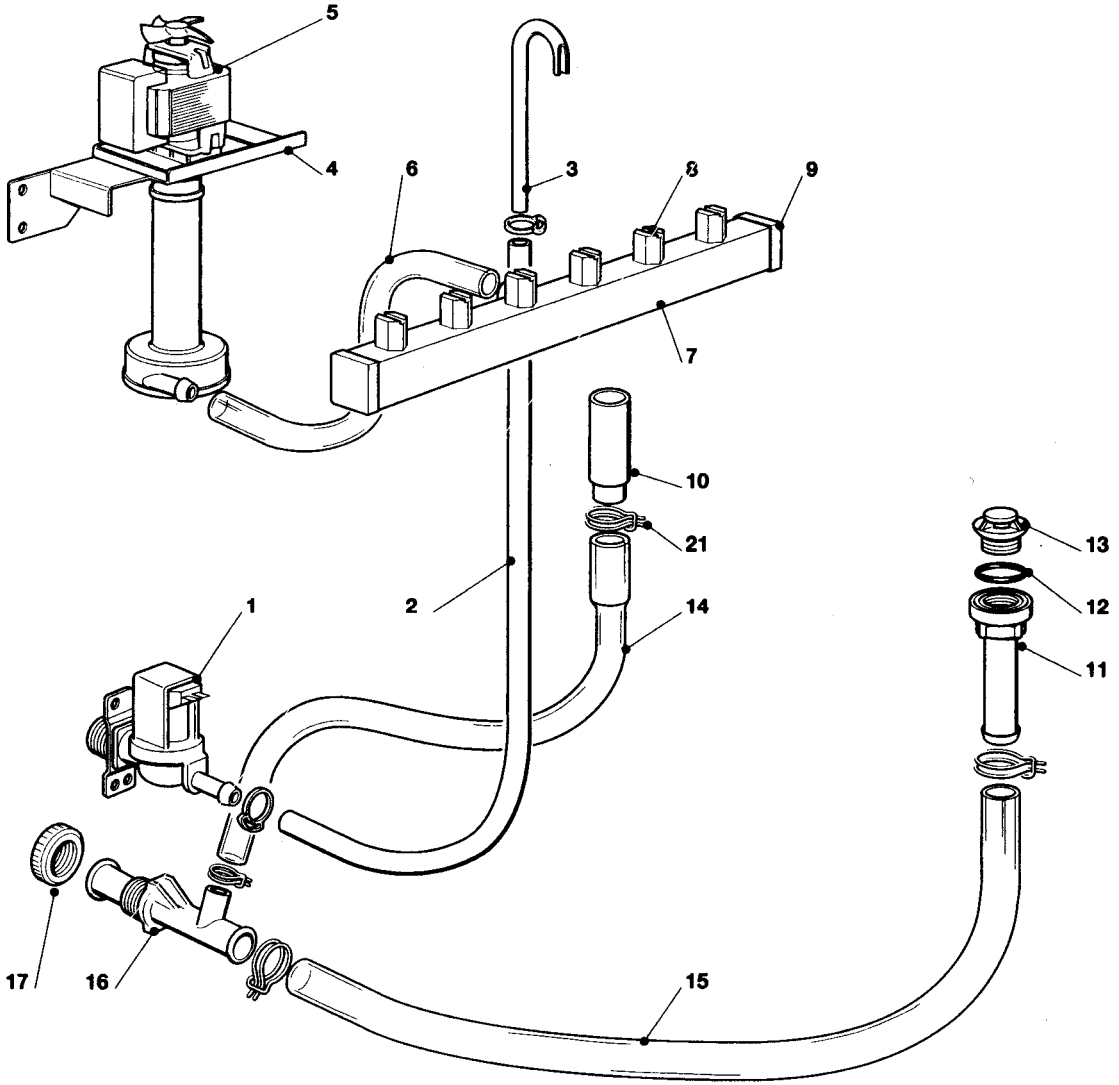
5
4
6
3
8
9
7
10
21
2
1
14
13
12
11
17
16
15

SC 20 - WATER SYSTEM - CIRCUITO IDRAULICO - CIRCUIT HYDRAULIQUE - WASSERSYSTEM

ITEM NO POS NO REP. NO REF. NO	PART NO CODICE REFERENCE STUECK NR	DESCRIPTION	DESCRIZIONE	DESIGNATION	BESCHREIBUNG
1	650105 66 650105 70	WATER INLET VALVE - AIR COOLED WATER INLET VALVE - WATER COOLED	ELETTROVALVOLA INGR. ACQUA ELETTROVALVOLA DOPPIA	ELECTROVANNE ARR. EAU - REFR. AIR ELECTROVANNE ARR. EAU - REFR. EAU	WASSEREINLAUFVENTIL - LUFT WASSEREINLAUFVENTIL - WASSER
2	281900 01	PLASTIC TUBE - PER METER	TUBO INGRESSO ACQUA	TUYAU EN PLASTIQUE - POUR MT.	PLASTIK ROHR - PRO METER
3	793172 00R	WATER INLET PIPE	TUBO INGR. ACQUA	TUYAU ENTREE EAU	WASSEREINLAUFROHR
4	724331 00	METAL BRACKET	SUPPORTO POMPA INOX	SUPPORT METALLIQUE	METALTRAEGER
5	620433 00	WATER PUMP	POMPA	POMPE A EAU	WASSER PUMPE
6	610150 03	PUMP INLET WATER PIPE	TUBO MANDATA POMPA	TUYAU DE REFOULEMENT POMPE	PUMPENABFLUSSCHLAUCH
7	650665 29	SPRAY BAR	TUBO SPRUZZATORE	COLLECTEUR	KOLLEKTOR
8	660558 00	SPRAY JET	SPRUZZATORI	GICLEURS	SPRÜHDÜSEN
9	660557 00	PLUG	UGELLO SPRUZZATORE	BOUCHON POUR COLLECTEUR	STOPFEN
10	660698 01	OVERFLOW STAND PIPE	TUBO DI TROPPO PIENO	TROP PLEIN	UEBERLAUFROHR
11	660219 01	DRAIN FITTING	SCARICO CELLA	TUYAU EVACUATION	ABFLUSSROHR
12	640134 00	O-RING	O-RING	JOINT TORIQUE	SIMMER RING
13	660211 01	DRAIN FILTER	FILTRO SCARICO CELLA	FILTRE CABINE STOCKAGE	BEHÄLTER ABLAUF FILTER
14	610191 00	OVERFLOW DRAIN TUBE	TUBO SCARICO TROPPO PIENO	TUYAU VIDANGE TROP PLAIN	BEHÄLTER ABLAUF
15	610148 09	STORAGE BIN DRAIN TUBE	TUBO SCARICO CONTENITORE	TUYAU VIDANGE CONTENEUR	BEHÄLTERAUSLAUFSCHLAUCH
16	660224 00	WATER DRAIN FITTING	RACCORDO A "T"	RACCORD EVACUATION EAU	WASSERABFLUSSANSCHLUSSE
17	660535 00	PLASTIC RING NUT	GHIERA	COLLIER DE SERRAGE EN PLAST.	PLASTIKRING MUTTER
21	650499 00	METAL CLAMP	FASCETTA STRINGITUBO	COLLIER METALLIQUE	METALLFESTKLEMMEN

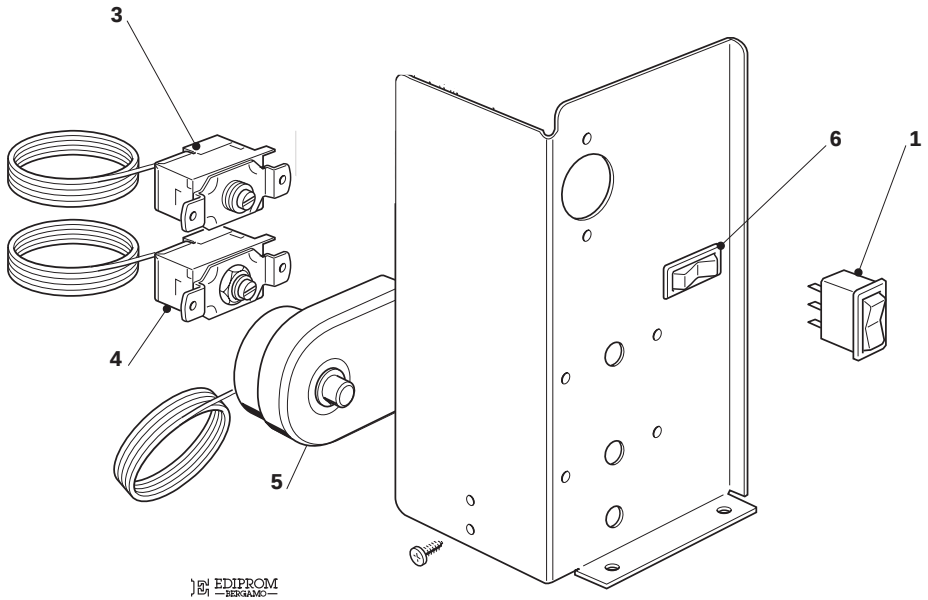

EDIPROM BERGAMO

0106.04

SC 20 - CONTROL BOX - SCATOLA DI CONTROLLO - BOITE ELECTRIQUE - SCHALTSCHRANK

ITEM NO POS NO REP. NO REF. NO	PART NO CODICE REFERENCE STUECK NR	DESCRIPTION	DESCRIZIONE	DESIGNATION	BESCHREIBUNG
1	620453 00	SWITCH	INTERRUTTORE LUMINOSO	INTERRUPTEUR LUMINEUX	SCHALTER
3	620264 16	EVAPORATOR THERMOSTAT	TERMOSTATO EVAPORATORE	THERMOSTAT EVAPORATEUR	VERDAMPFERTHERMOSTAT
4	630005 00	BIN THERMOSTAT	TERMOSTATO CONTENITORE	THERMOSTAT CONTENEUR	BEHÄLTER THERMOSTAT
5	620443 02	THERMOSTAT - SAFETY	TERMOSTATO DI SICUREZZA	THERMOSTAT DE SECURITÉ	SICHERHEITS THERMOSTAT
6	620442 01	SWITCH	COMMUTATORE UNIPOLARE	INTERRUPTEUR	UMSCHALTER

SC 20 - COMPRESSOR CHART - TABELLA COMPRESSORI - TABLEAU COMPRESSEURS - KOMPRESSOR KARTE

MODEL MODELLO MODELE MODELL	VOLTS VOLTAGGIO TENSION SPANNUNG	COMPRESSOR MODEL MODELLO COMPRESSORE TYPE DU COMPRESSEUR KOMPRESSOR TYP	COMPRESSOR ASSY ASS. COMPRESSORE ENS. COMPRESSEUR NUR KOMPRESSOR	RELAY RELE' RELAIS RELAIS	PROTECTOR PROTETTORE PROTECTEUR SCHUTZGERAT	START CAPACITOR CAPACITA' D'AVV. CAPACITE DE DEMARR. START KONDENSATOR
SC 20	115/60/1	–	–	–	–	–
SC 20	230/60/1	–	–	–	–	–
SC 20	230/50/1	GL 80 TB	670097 08	620057 35	620058 65	620167 29

SC 20 - ELECTRIC COMPONENTS CHART - TABELLA COMPONENTI ELETTRICI
TABLEAU COMPOSANTS ELECTRIQUE - ELEKTRISCHEKARTE

MODEL MODELLO MODELE MODELL	VOLTS TENSIONE TENSION SPANNUNG	WATER PUMP POMPA POMPE A EAU WASSER PUMPE	FAN MOTOR ONLY MOTORE VENTILATORE MOTEUR VENTILATEUR LUFTER MOTOR	WATER INLET VALVE VALVOLA INGR. ACQUA V.E.M. ARRIVEE' EAU WASSEREIN. VENTIL	HOT GAS VALVE VALVOLA GAS CALDO V.E.M. GAZ CHAUDS HEISSGAZ VENTIL	TIMER TIMER MINUTERIE TIMER
SC 20	115/60/1	–	–	–	–	–
SC 20	230/60/1	–	–	–	–	–
SC 20	230/50/1	620433 00	620419 02	650105 66 / 650105 70 (AIR / WATER)	620306 48	–

SIMAG
ICE MACHINES

www.simag.it

SIMAG
via Risorgimento, 4
20017 Mazzo di Rho (MI) - Italy
Tel. +39 02 93900215 (Commerciale - Sales Dept.)
Tel. +39 02 93960357 (Assistenza - Service Dept.)
Fax +39 02 93900226 (Commerciale - Sales Dept.)
Fax +39 02 93960366 (Assistenza - Service Dept.)
e-mail: sales@simag.it
e-mail: service@simag.it

Singapore Office
SIMAG FAR EAST
627A Aljunied Road
04-04 Biztech Centre
Singapore 389842
Tel. ++65 6738 5393
Fax ++65 6738 1959
e-mail: scotsice@singnet.com.sg

Certified ISO 9001
TOTAL QUALITY