Mod./Type:	**GW 35...**	cod./num.	2532215.00
	/	data/date:	19/06/2015

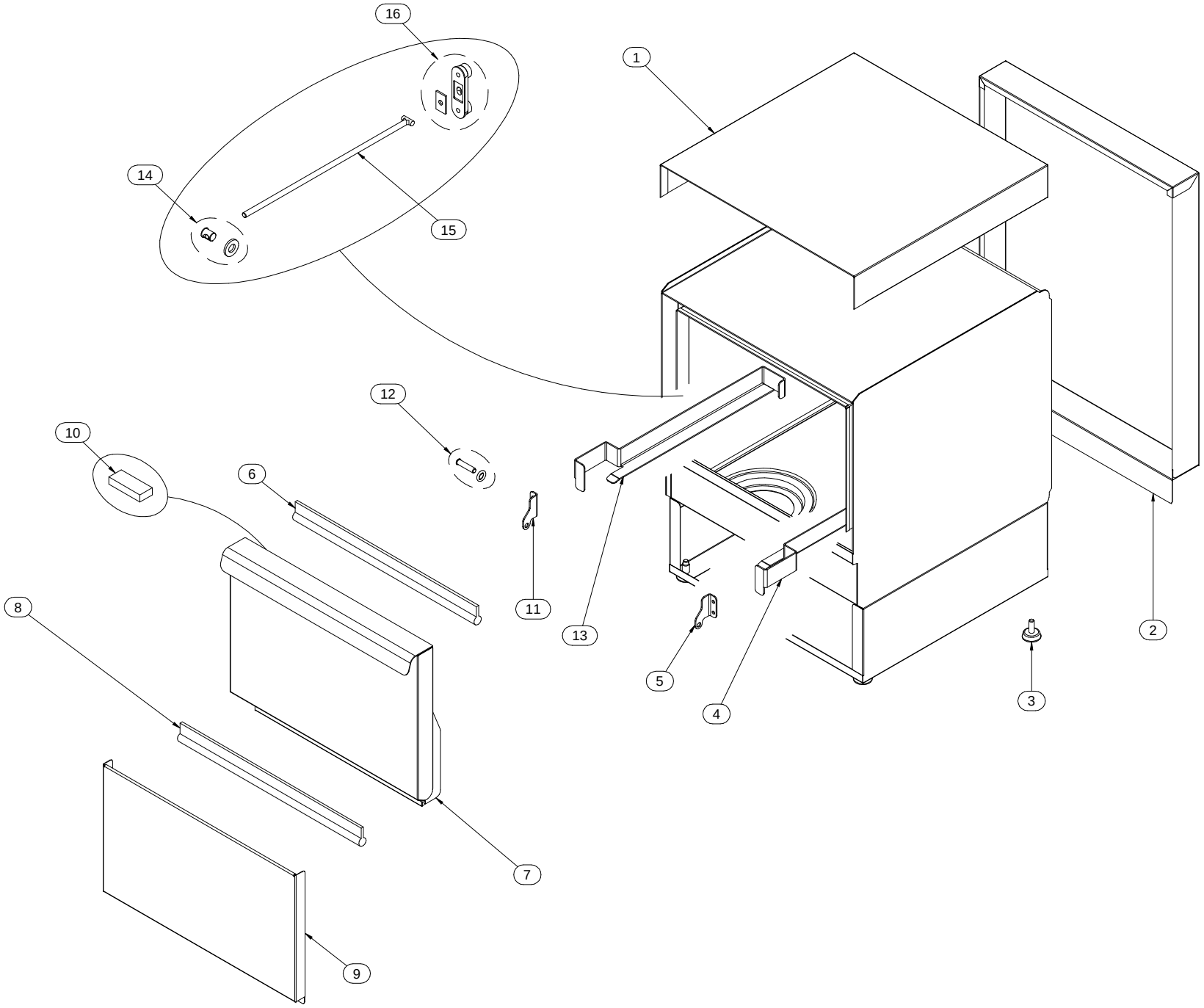

Mod.:	GW 35…			cod. / num. 2532216.00 data / date 19/06/2015 rif. / ref. 2532215.00		RICAMBI CONSIGLIATI - RECOMMENDED SPARE PARTS - PIÈCES DÉTACHÉES RECOMMANDÉES - EMPFOHLENEN ERSATZTEILE	GW 35…	NOTE	
POS.	DESCRIZIONE	DESCRIPTION	DENOMINATION	BENENNUNG	COD.		Q.ty		
1	COPERTURA	COVER	COUVERTURE	ABDECKUNG	421.239.00		1		
2	PANNELLO POSTERIORE	BACK PANEL	PANNEAU POSTERIEUR	HINTERBRETT	421.240.00		1		
3	PIEDINO	FOOT	PIED	STELLFUSS	451.071.00		4		
4	SUPPORTO CESTINO	SUPPORT FOR BASKET	SUPPORT POUR PANIER	KORBTRÄGER	422.172.00		1		
5	CERNIERA	JOINT	CHARNIERE	SCHARNIER	421.241.00		1		
6	GUARNIZIONE	WASHER	GUARNITURE	DICHTUNGSRING	0832.21320.1	*	0.45	U.M. metri	U. M. meters
7	PORTA	DOOR	PORTE	TÜR	411.196.00		1		
8	GUARNIZIONE	WASHER	GUARNITURE	DICHTUNGSRING	0832.21320.1	*	0.415	U.M. metri	U. M. meters
9	PANNELLO FRONTALE	FRONTAL PANEL	PANNEAU FRONTAL	FRONTPLATTE	421.237.00		1		
10	MAGNETE	MAGNET	MAGNÉTO	MAGNET	461.105.00		2		
11	CERNIERA	JOINT	CHARNIERE	SCHARNIER	421.242.00		1		
12	PERNO CERNIERA	JOINT STUD	GOUJON DE LA CHARNIÈRE	SCHARNIERBOLZEN	256.451.00		2		
13	SUPPORTO CESTINO	SUPPORT FOR BASKET	SUPPORT POUR PANIER	KORBTRÄGER	422.173.00		1		
14	FERMO PORTA	DOORSTOP	ARRETE DE TIGE	TÜRVERRIEGELUNG	256.442.00		2		
15	ASTA PORTA	DOOR ROD	TIGE DE SUPPORT PORTE	VERSTEIGERUNG DES TÜR	412.094.00		2		
16	PARACOLPI	BUFFER	PARA-CHOCS	BUMPERS	256.441.00		2		
17									
18									
19									
20									
21									
22									
23									
24									
25									
26									
27									
28									
29									
30									
31									
32									
33									
34									
35									

Mod./Type:	GW 35... - GW 40... - GW 41... GWD 40... - GWD 41... - DWD 45...	cod./num.	2532179.00
		data/date:	19/06/2015

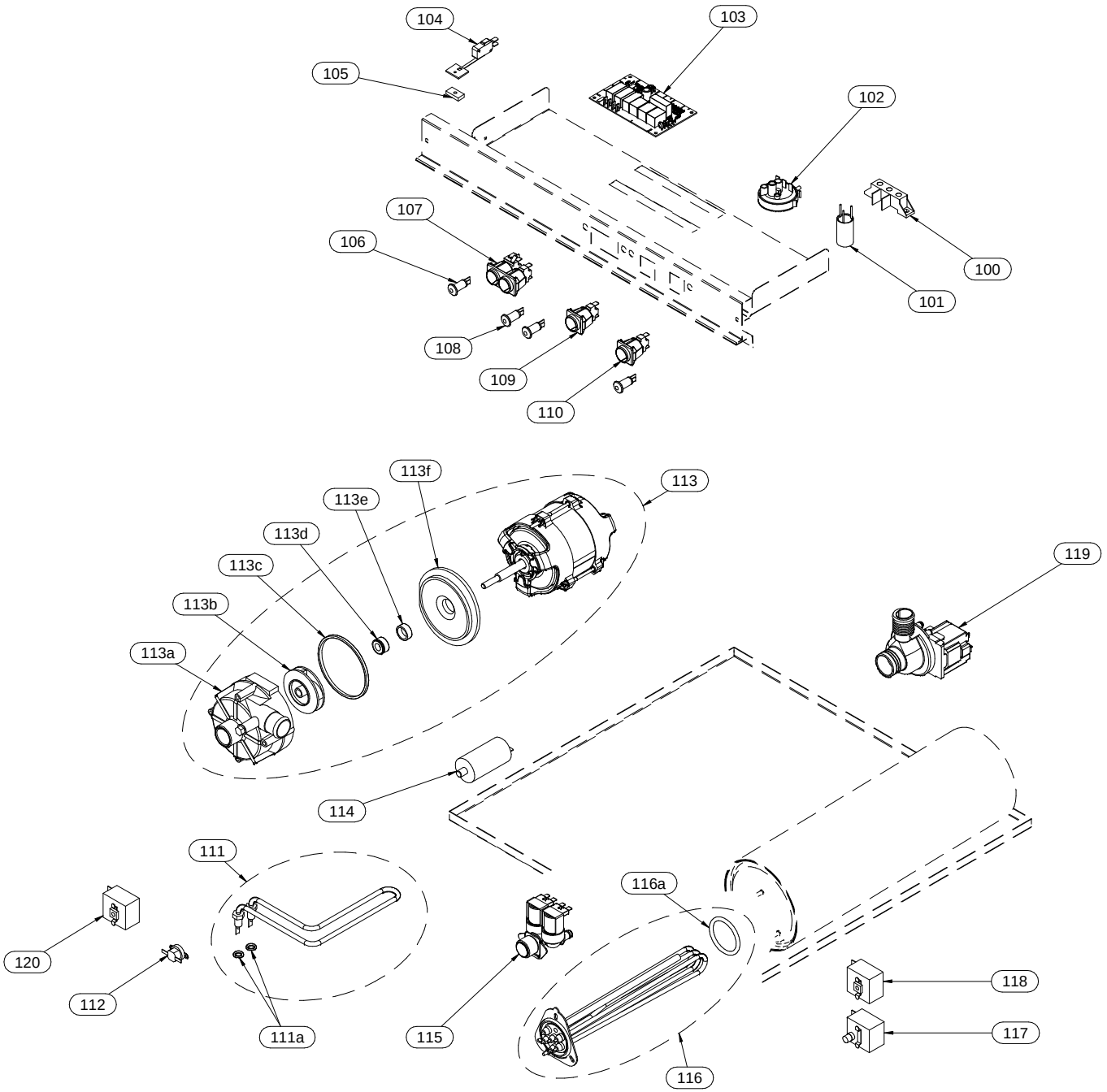

Mod.:	GW 35… - GW 40… - GW 41… GWD 40… - GWD 41… - DWD 45...			cod. / num. 2532180.00 data / date 19/06/2015 rif. / ref. 2532179.00		RICAMBI CONSIGLIATI - RECOMMENDED SPARE PARTS - PIECES DETACHÉES RECOMMANDÉES - EMPFOHLENEN ERSATZTEILE	GW 35	GW 35 A	GW 35 PS	GW 35 A PS	GW 40 GW 41	GW 40 A GW 41 A	GW 40 PS GW 41 PS	GW 40 A PS GW 41 A PS	GWD 40 GWD 41	GWD 40 A GWD 41 A	GWD 40 PS GWD 41 PS	GWD 40 A PS GWD 41 A PS	DWD 45	DWD 45 A	DWD 45 PS	DWD 45 A PS	NOTE	
POS.	DESCRIZIONE	DESCRIPTION	DENOMINATION	BENENNUNG	COD.		Q. ty																	
100	MORSETTIERA	TERMINAL BOARD	BORNES	KLEMMENBRETT	463.026.00		1	1	1	1	1	1	1	1	1	1	1	1	1	1	1	1		
101	FILTRO ANTIDISTURBO	LIMITER FILTER	FILTRE DE BRUIT	ANTIJAMMING FILTER	464.067.00		1	1	1	1	1	1	1	1	1	1	1	1	1	1	1	1		
102	PRESSOSTATO	PRESSURE SWITCH	PRESSOSTAT	NIVEAUSCHALTER	462.019.00	*	1	1	1	1														
					462.003.00	*					1	1	1	1	1	1	1	1						
					461.016.00	*													1	1	1	1		
103	SCHEDA RELÉ	RELAY BOARD	CARTE DE RELAIS	RELAISPLATINE	256.444.00	*	1	1	1	1	1	1	1	1	1	1	1	1	1	1	1	1	FROM: 01.11.2012	TO: 02.06.2013
					256.444.13	*	1	1	1	1	1	1	1	1	1	1	1	1	1	1	1	1	FROM: 03.06.2013	TO:...
104	MICRO PORTA	DOOR MICROSWITCH	MICROINTERRUPTEUR PORTE	TUERKONTAKT SCHALTER	412.075.00	*	1	1	1	1	1	1	1	1	1	1	1	1	1	1	1	1		
105	MAGNETE	MAGNET	MAGNÉTO	MAGNET	461.043.00		1	1	1	1	1	1	1	1	1	1	1	1	1	1	1	1		
106	LAMPADA SPIA VERDE	GREEN INDICATOR LIGHT	LAMPE TEMOIN VERTE	GRUENE KONTROLLAMPE	463.014.00		1	1	1	1	1	1	1	1	1	1	1	1	1	1	1	1		
107	INTERRUTTORE DOPPIO	DOUBLE SWITCH	INTERRUPTEUR DOUBLE	DOPPELSCHALTER	461.093.00	*	1	1	1	1	1	1	1	1	1	1	1	1	1	1	1	1		
108	LAMPADA SPIA ARANCIO	ORANGE INDICATOR LIGHT	LAMPE TEMOIN ORANGE	ORANGE KONTROLLAMPE	463.012.00		1	1	1	1	2	3	2	3	2	3	2	3	2	3	2	3		
109	INTERRUTTORE	SWITCH	INTERRUPTEUR	SCHALTER	461.094.00	*	1	1	1	1	1	1	1	1	1	1	1	1	1	1	1	1		
110	PULSANTE	BUTTON	BOUTON	TASTE	461.092.00	*	-	1	-	1	-	1	-	1	-	1	-	1	-	1	-	1		
111	RESITENZA VASCA	SAFETY RELAY CONTACTS	RES. CUVE	TANKHEIZKORPER	465.012.00	*	1	1	1	1	1	1	1	1	1	1	1	1	1	1	1	1		
111a	GUARNIZIONE RESISTENZA	HEATING ELEMENT GASKET	JOINT DE LA RÉSISTENCE	WIDERSTAND-DICHTUNG	0835.26919.1		2	2	2	2	2	2	2	2	2	2	2	2	2	2	2	2		
112	TERMOSTATO VASCA	TUB THERMOSTAT	THERMOSTAT CUVE	TANKTHERMOSTAT	461.060.00	*	1	1	1	1	1	1	1	1	-	-	-	-	1	1	1	1		
113	ELETTROPOMPA	MOTOR PUMP	ELECTROPOMPE	ELEKTROPUMPE	464.082.00		1	1	1	1	1	1	1	1	1	1	1	1						
					464.113.00														1	1	1	1		
113a	COCLEA	HELIX SCREW	PELLETEUSE HELICOÏDALE	FÖRDERSCHNECKE	464.061.00		1	1	1	1	1	1	1	1	1	1	1	1						
					464.127.00														1	1	1	1		
113b	GIRANTE	IMPELLER	ROUE	IMPELLER	464.106.00		1	1	1	1	1	1	1	1	1	1	1	1						
					464.129.00														1	1	1	1		
113c	GUARNIZIONE	SEAL	JOINT	DICHTUNG	464.043.00		1	1	1	1	1	1	1	1	1	1	1	1						
					464.128.00														1	1	1	1		
113d	TENUTA ROTANTE	ROTATING SEAL	BOURRAGE DE POMPE	DREHDICHTUNG	464.044.00		1	1	1	1	1	1	1	1	1	1	1	1						
					464.130.00														1	1	1	1		
113e	TENUTA FISSA	FIXED SEAL	ÉTANCHÉITÉ FIXE	FIXE DICHTUNG	464.026.00		1	1	1	1	1	1	1	1	1	1	1	1	1	1	1	1		
113f	SUPPORTO COCLEA	HELIX SCREW SUPPORT	SUPPORT PELLETEUSE HELICOÏDALE	ABSTÜTZUNG FÜR FÖRDERSCHNECKE	464.060.00		1	1	1	1	1	1	1	1	1	1	1	1						
					464.131.00														1	1	1	1		
114	CONDENSATORE	CONDENSER	CONDENSEUR	KONDENSATOR	464.042.00		1	1	1	1	1	1	1	1	1	1	1	1						
					464.016.00														1	1	1	1		
115	ELETTROVALVOLA	SOLENOID VALVE	ELECTROVANNE	ELEKTROVENTIL	462.000.00	*	1		1		1		1		1		1		1		1			
					256.371.00	*		1		1		1		1		1		1		1		1		
116	RESISTENZA BOILER	BOILER RESISTANCE	RES. CHAUFFE- EAU	BOILERHEIZKORPER	465.011.00	*	1	1	1	1	1	1	1	1	1	1	1	1	1	1	1	1		
116a	GUARNIZIONE RESISTENZA	HEATING ELEMENT GASKET	JOINT DE LA RÉSISTENCE	WIDERSTAND-DICHTUNG	0835.53470.1		1	1	1	1	1	1	1	1	1	1	1	1	1	1	1	1		
117	TERMOSTATO SICUREZZA	SAFETY THERMOSTAT	THERMOSTAT DE SECURITÉ	SICHERHEITSTHERMOSTAT	461.071.00	*	1	1	1	1	1	1	1	1	1	1	1	1	1	1	1	1		
118	TERMOSTATO BOILER	BOILER THERMOSTAT	THERMOSTAT CHAUFFE-EAU	BOILER -THERMOSTAT	461.016.00	*	1	1	1	1	1	1	1	1	1	1	1	1	1	1	1	1		
119	POMPA SCARICO	EXHAUST PUMP	ELECTROPOMPE DE VIDANGE	ABLAUF PUMPE	464.037.00		-	-	1	1	-	-	1	1	-	-	1	1	-	-	1	1		
120	TERMOSTATO VASCA	TUB THERMOSTAT	THERMOSTAT CUVE	TANKTHERMOSTAT	461.015.00	*	-	-	-	-	-	-	-	-	1	1	1	1	-	-	-	-		
121																								
122																								
123																								
124																								
125																								
126																								
127																								
128																								
129																								
130																								
131																								
132																								

Mod./Type: **GW 35...**
/

cod./num. 2532217.00
data/date: 22/06/2015

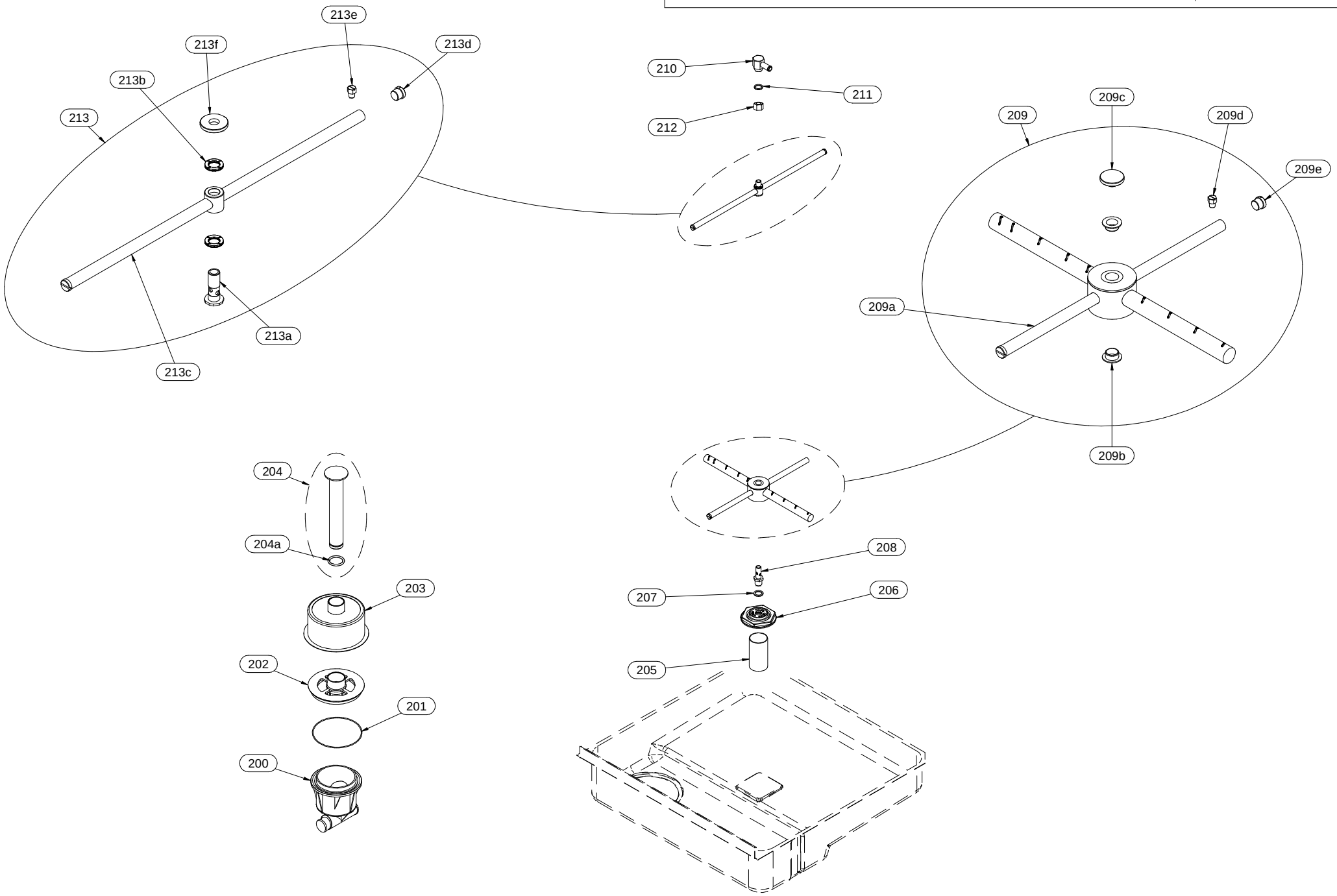

Mod.:	GW 35…			cod. / num. 2532218.00 data / date 22/06/2015 rif. / ref. 2532217.00		RICAMBI CONSIGLIATI - RECOMMENDED SPARE PARTS - PIÈCES DÉTACHÉES RECOMMANDÉES - EMPFOHLENEN ERSATZTEILE	GW 35…	NOTE
POS.	DESCRIZIONE	DESCRIPTION	DENOMINATION	BENENNUNG	COD.		Q. tà	
200	SCARICO	DRAIN	VIDANGE	ABLAUF	451.025.00		1	
201	GUARNIZIONE	WASHER	GUARNITURE	DICHTUNGSRING	0835.35101.1		1	
202	GHIERA	FERRULE	VIROLE	NUTMUTTER	451.022.14		1	
203	FILTRO SCARICO	EXHAUST FILTER	FILTRE D'ECHAPPEMENT	ABLAUFFILTER	411.088.00		1	
204	TROPPOPIENO	OVERFLOW PIPE	TROP-PLEIN	ÜBERLAUF	410.390.00		1	
204a	GUARNIZIONE	WASHER	GUARNITURE	DICHTUNGSRING	0835.26266.1	*	1	
205	RACCORDO	CONNECTOR	RACCORD	ANSCHLUSS	431.116.00		1	
206	GHIERA	FERRULE	VIROLE	NUTMUTTER	451.065.00		1	
207	PARZIALIZZATORE	SPLITTER	RONDELLE DE PARTIALISATION	ABZWEIGER	424.027.00		1	
208	PERNO LAVAGGIO INFERIORE	LOWER WASHING PIVOT	GOUJON LAVAGE INFÉRIEUR	STIFT UNTERER SPÜLUNG	441.126.00		1	
209	GIRANTE	IMPELLER	ROUE	IMPELLER	410.395.00		1	
209a	GIRANTE	IMPELLER	ROUE	IMPELLER	411.194.00		1	
209b	BOCCOLA	PLAIN BEARING	PALIER LISSE	BUCHSE	451.161.00		2	
209c	GHIERA	FERRULE	VIROLE	NUTMUTTER	441.108.00		1	
209d	UGELLO RISCIACQUO	RINSE INJECTOR	INJECTEUR DE RINCAGE	NACHSPUELDUESE	441.040.00		4	
209e	TAPPO RISCIACQUO	RINSE PLUG	BOUCHON RINÇAGE	AUSSPÜLUNGSSTÖPSEL	451.028.00		2	
210	RACCORDO	CONNECTOR	RACCORD	ANSCHLUSS	411.193.00		1	
211	GUARNIZIONE	WASHER	GUARNITURE	DICHTUNGSRING	0840.25175.0		1	
212	DADO	NUT	ÈCROU	MUTTER	641.117.00		1	
213	GIRANTE RISCIACQUO	RINSE IMPELLER	GROUPE BRAS RINÇAGE	AUSSPÜLUNGSARMGRUPPE	410.394.00		1	
213a	PERNO RISCIACQUO	RINSING PIN	GOUJON RINÇAGE	SPUELSTIFT LB LS	441.057.00		1	
213b	RONDELLA RISCIACQUO	RINSING GASKET	RONDELLE RINÇAGE	AUSSPÜLUNGSUNTERLEGSCHEIBE	451.024.00		2	
213c	GIRANTE RISCIACQUO	RINSE IMPELLER	GROUPE BRAS RINÇAGE	AUSSPÜLUNGSARMGRUPPE	411.191.00		1	
213d	TAPPO RISCIACQUO	RINSE PLUG	BOUCHON RINÇAGE	AUSSPÜLUNGSSTÖPSEL	451.028.00		2	
213e	UGELLO RISCIACQUO	RINSE INJECTOR	INJECTEUR DE RINCAGE	NACHSPUELDUESE	441.040.00		4	
213f	GHIERA	FERRULE	VIROLE	NUTMUTTER	441.044.00		1	
214								
215								
216								
217								
218								
219								
220								
221								
222								
223								
224								
225								
226								
227								
228								

Mod./Type:	**GW 35... - GW 4... - GWD 4... - DWD 45...** **DW 5... - DWD 51... - DWD 59...**	cod./num.	2532185.00
		data/date:	22/06/2015

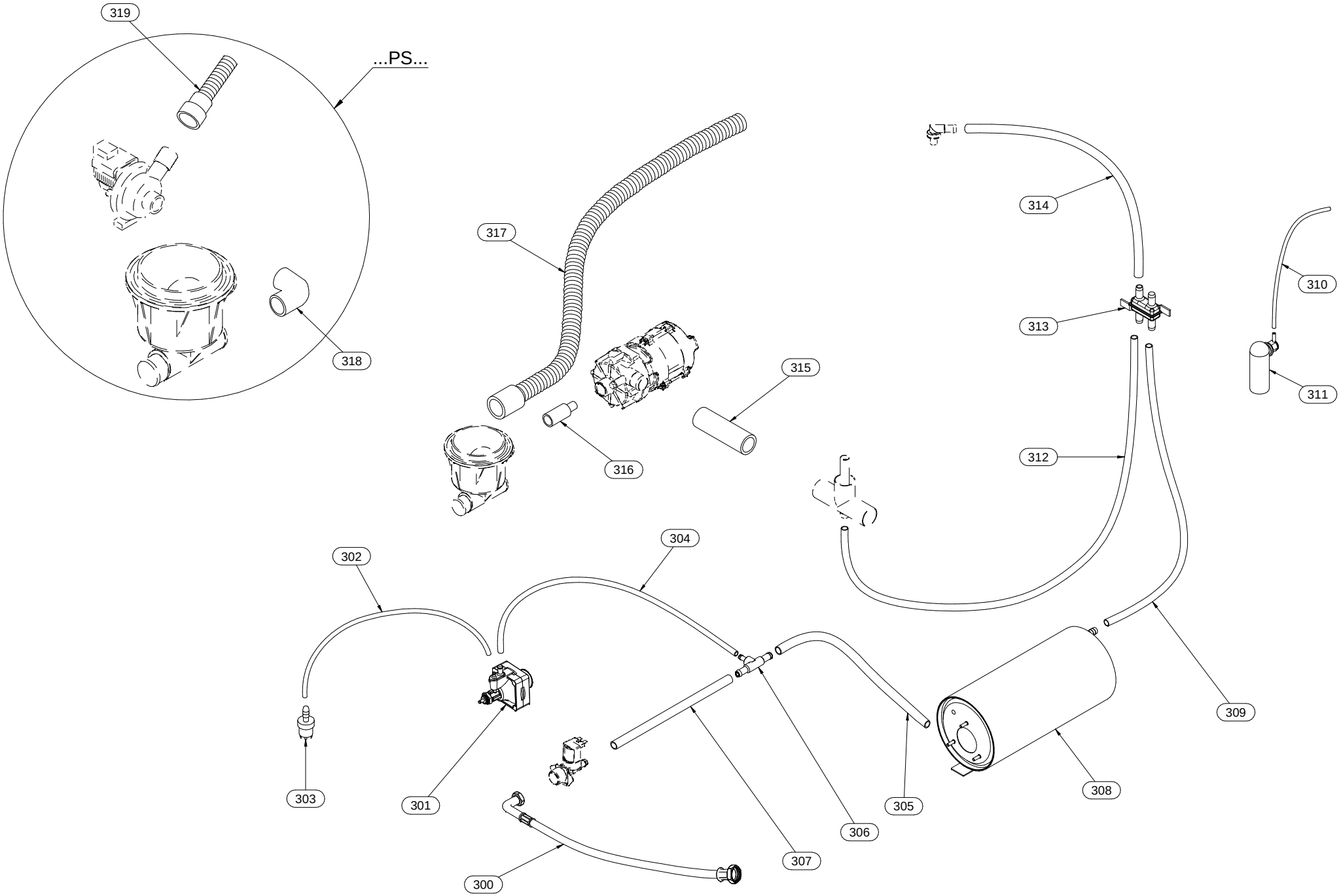

Mod.:	GW 35... - GW 4... - GWD 4... - DWD 45... DW 5... - DWD 51... - DWD 59...			cod. / num. 2532186.00 data / date 22/06/2015 rif. / ref. 2532185.00		RICAMBI CONSIGLIATI - RECOMMENDED SPARE PARTS - PIÈCES DETACHEES RECOMMANDÉES - EMPFOHLENEN ERSATZTEILE	GW 35...	GW 35 PS...	GW 40...	GW 40 PS...	GW 41...	GW 41 PS...	GWD 40...	GWD 40 PS...	GWD 41...	GWD 41 PS...	DWD 45...	DWD 45 PS...	DW 5.....;	DW 5...PS	DWD 51...	DWD 51 PS...	DWD 59....	DWD 59 PS....	NOTE
POS.	DESCRIZIONE	DESCRIPTION	DENOMINATION	BENENNUNG	COD.		Q. ty																	
300	TUBO CARICO	INLET HOSE	TUYAU DE CHARGEMENT	BELASTUNG-ROHR	452.033.00		1	1	1	1	1	1	1	1	1	1	1	1	1	1	1	1	1	1	
301	DOSATORE BRILLANTANTE	RINSE AID ADDITIVE DISPENSER	DOSEUR PRODUIT DE RINÇAGE	NACHSPUELMITTELGERAET	471.011.00	*	1	1	1	1	1	1	1	1	1	1	1	1	1	1	1	1	1	1	
302	TUBO 4x6	PIPE D.4x6	TUYAU 4x6	ROHR 4x6	452.039.00		1	1	1	1	1	1	1	1	1	1	1	1	1	1	1	1	1	1	
303	FILTRO ASPIRAZIONE	SUCTION FILTER	FILTRE ASPIRATION	ANSAUGFILTER	451.048.00		1	1	1	1	1	1	1	1	1	1	1	1	1	1	1	1	1	1	
304	TUBO 8x15	PIPE 8x15	TUYAU 8x15	ROHR 8x15	452.157.00		1	1																	
					452.125.00				1	1	1	1	1	1	1	1									
					452.038.00												1	1	1	1	1	1	1	1	
305	TUBO 12x19	PIPE 12x19	TUYAU 12x19	ROHR 12x19	452.086.00		1	1																	
					452.041.00				1	1	1	1	1	1	1	1									
					452.136.00												1	1	1	1	1	1	1	1	
306	RACCORDO A T	T-FITTING	RACCORD À T	T-STÜCK	451.133.00		1	1	1	1	1	1	1	1	1	1	1	1	1	1	1	1	1	1	
307	TUBO 12x19	PIPE 12x19	TUYAU 12x19	ROHR 12x19	452.160.00		1	1																	
					452.126.00				1	1	1	1	1	1	1	1									
					452.141.00												1	1					1	1	
					452.138.00														1	1	1	1			
308	BOILER	RINSE TANK	GROUPE CHAUDIERE	BOILERGRUPPE	410.387.00		1	1																	
					410.279.00				1	1	1	1	1	1	1	1									
					410.280.00												1	1	1	1	1	1	1	1	
309	TUBO 12x19	PIPE 12x19	TUYAU 12x19	ROHR 12x19	452.076.00		1	1																	
					452.077.00				1	1	1	1	1	1	1	1									
					452.117.00												1	1							
					452.105.00														1	1	1	1	1	1	
310	TUBO 4x8	PIPE 4x8	TUYAU 4x8	ROHR 4x8	452.158.00		1	1																	
					452.054.00				1	1	1	1													
					452.088.00								1	1											
					452.089.00										1	1									
					452.139.00												1	1							
					452.099.00														1	1					
					452.044.00																1	1			
					452.120.00																		1	1	
311	CAMPANA PRESSOSTATO	AIR TRAP	CLOCHE DU PRESSOSTAT	DRUCKWAECHTER	451.059.00		1	1	1	1	1	1	1	1	1	1									
					451.083.00												1	1							
					451.036.00														1	1	1	1	1	1	
312	TUBO 12x19	PIPE 12x19	TUYAU 12x19	ROHR 12x19	452.117.00		1	1																	
					452.041.00				1	1	1	1	1	1	1	1									
					452.142.00												1	1							
					452.040.00														1	1	1	1	1	1	
313	RIPARTITORE	DISTRIBUTOR	RÉPARTITEUR	VERTEILER	451.042.00		1	1	1	1	1	1	1	1	1	1	1	1	1	1	1	1	1	1	
314	TUBO 12x19	PIPE 12x19	TUYAU 12x19	ROHR 12x19	452.161.00		1	1																	
					452.041.00				1	1			1	1			1	1	1	1					
					452.059.00						1	1			1	1							1	1	
					452.136.00																1	1			
315	RACCORDO MANDATA	DELIVERY FITTING	RACCORD DE REFOULEMENT	ZULEITUNGSANSCHLUSS	452.151.00		1	1																	
					452.065.00				1	1	1	1	1	1	1	1									
					452.066.00												1	1							
					452.031.00														1	1	1	1	1	1	
316	RACCORDO ASPIRAZIONE	SUCTION FITTING	RACCORD ASPIRATION	ABSAUGANSCHLUSS	452.159.00		1	1																	
					452.066.00				1	1	1	1	1	1	1	1									
					452.123.00												1	1							
					452.030.00														1	1	1	1	1	1	
317	TUBO SCARICO	EXHAUST PIPE	TUYAU D'ÉCHAPPEMENT	ABLAUFROHR	452.034.00		1	-	1	-	1	-	1	-	1	-	1	-	1	-	1	-	1	-	
318	RACCORDO SCARICO	DISCHARGE CONNECTION	COUPLEUR DE VIDANGE	ABLAUFANSCHLUSS	452.067.00		-	1	-	1	-	1	-	1	-	1	-	1	-	1	-	1	-	1	
319	TUBO SCARICO	EXHAUST PIPE	TUYAU D'ÉCHAPPEMENT	ABLAUFROHR	452.042.00		-	1	-	1	-	1	-	1	-	1	-	1	-	1	-	1	-	1	
320																									
321																									
322																									
323																									
324																									
325																									