SIMAG

SCN 75

R 134 A VERSION

SPARE PARTS LIST
CATALOGO RICAMBI
CATALOGUE PIÈCES DÉTACHÉES
ERSATZTEILENKATALOG

090090.07 REV. 11/2009

PAGE PAGINA PAGE SEITE	TABLE OF CONTENTS	INDICE	TABLE DES MATIERES	INHALTVERZEICHNIS
1	TABLE OF CONTENTS	INDICE	TABLE DES MATIERES	INHALTVERZEICHNIS
2/3	UNIT PANELS	ASSIEME MOBILE	ENS. CAROSSERIE	MACHINE GEHAUSE
4/5	REFRIGERANT SYSTEM AIR COOLED	SISTEMA REFRIGERANTE RAFFR. AD ARIA	CIRCUIT FRIGORIFIQUE REFROID. A AIR	GEFRIERSYSTEM LUFTGEKUEHLT
6/7	REFRIGERANT SYSTEM WATER COOLED	SISTEMA REFRIGERANTE RAFFR. AD ACQUA	CIRCUIT FRIGORIFIQUE REFROID. A EAU	GEFRIERSYSTEM WASSERGEKUEHLT
8/9	WATER SYSTEM	CIRCUITO IDRAULICO	CIRCUIT HYDRAULIQUE	WASSER SYSTEM
10/11	CONTROL BOX	SCATOLA DI CONTROLLO	BOITE ELECTRIQUE	SCHALTSCHRANK
12	COMPRESSOR AND ELECTRIC COMPONENT CHARTS	TABELLA COMPRESSORI E COMPONENTI ELETTRICI	LISTE DES COMPRESSEURS ET COMPOSANTS ELECTRIQUE	KOMPRESSOR UND ELEKTRISCHER TEILLISTE

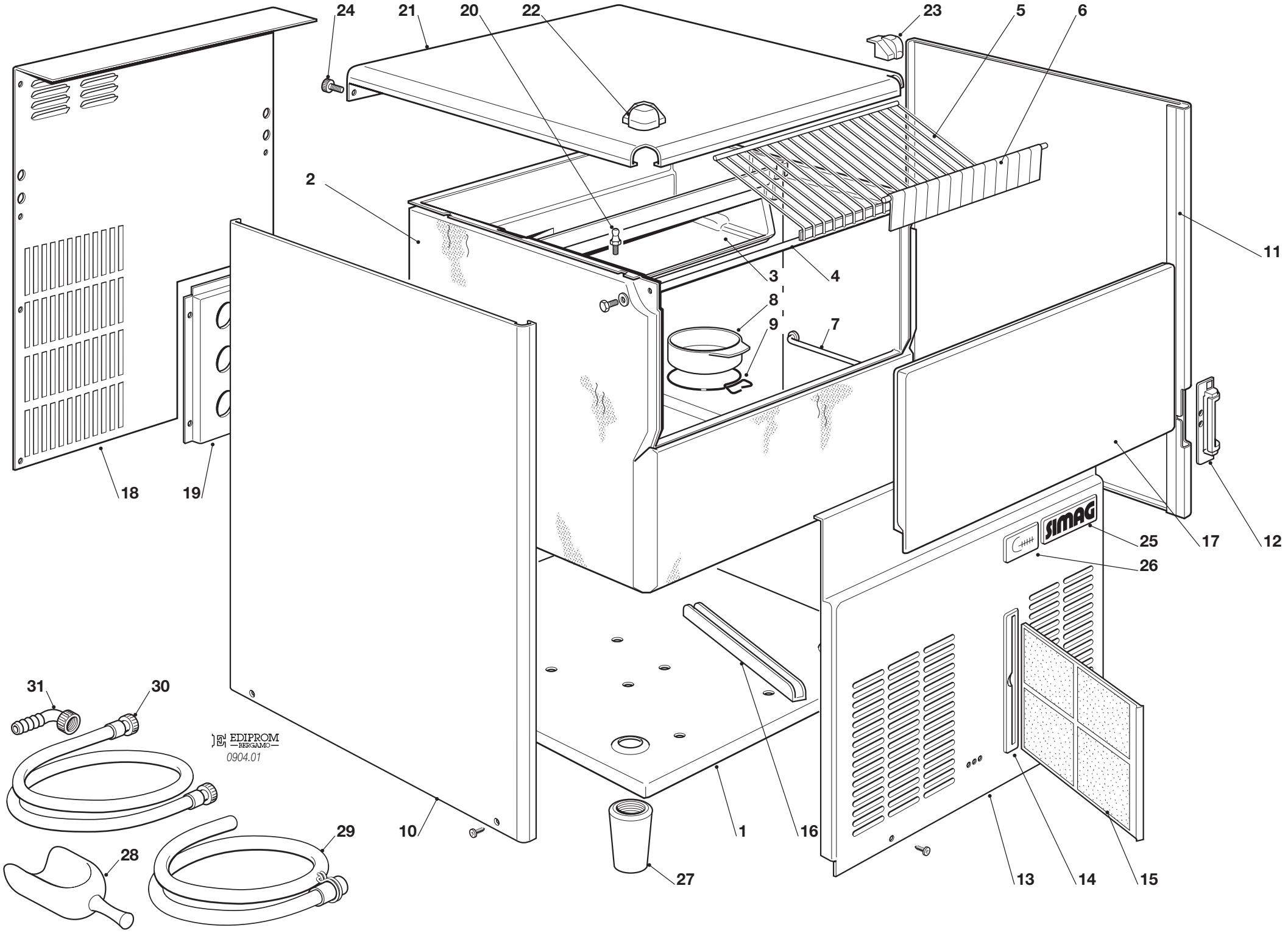
24
21
20
22
23
5
6
2
11
3
4
8
9
7
18
19
17
12
25
26
31
30
EDIPROM
BERGAMO
0904.01
10
1
16
13
14
15
29
28
27

SCN 75 -UNIT PANELS - ASSIEME MOBILE - ENS. CARROSSERIE - MACHINE GEHAUSE-

ITEM NO POS NO REP. NO REF. NO	PART NO - CODICE REFERENCE - STUECK NR.	DESCRIPTION	DESCRIZIONE	DESIGNATION	BESCHREIBUNG
1	702558 00	BASE	PIASTRINA DI BASE	PLAQUE DE BASE	GRUNDPLATTE
2	782094 07	INSULATED BIN ASSY	ASSIEME CELLA ISOLATA	ENS. CABINE	ISOLIEREISSPEICHER
3	660947 00	EVAPORAT. HOUSING	INVOLUCRO EVAPORAT.	CHAMBRE INTERIEUR	CELLE INTERN
4	732016 05	BIN DOOR BRACKET	ASTA PORTELLO	TIGE PORTE	KLAPPENACHSE
5	650690 00	ICE DEFLECTOR	GRIGLIA SCORRIMENTO CUBETTI	GRILLE GLISSEMENT GLAÇON	ABGLEITGRILL
6	783172 03R	CURTAIN ASSY	ASSIEME TENDINA	ENS. LAMELLE	ABDECKKLAPPE GESAMTHEIT
7	732017 02	BULB HOLDER	TUBO PORTABULBO	TUBE PORTEBULBE	FUEHLERHALTER
8	660741 00	PLASTIC PLUG	TAPPO INVOLUCRO EVAPORAT.	BOUCHON EN PLASTIQUE	PLASTIKSTOPFEN
9	460047 01	SPRING	MOLLA	RESSORT	FEDER
10	722307 00	LEFT PANEL	PAN.LO LAT. SX	JOUE GAUCHE	LINKE ABDECKL. HALTER.
11	722376 00	RIGHT PANEL	PAN.LO LAT. DX	JOUE DROITE	RECHTEGEHÄUS. EDELST.
12	660883 00	FRONT SWITCH PLASTIC PROT	CARTER PROTEZIONE INTERRUT	CARTER PROTECTION INTERRUPT	SCHALTERABDECKUNG
13	722375 00 722375 01	FRONT PANEL AIR FRONT PANEL WATER	PAN.LO ANT. ARI A PAN.LO ANT. ACQUA	PAN.AU AVANT . AIR PAN.AU AVANT . EAU	VOR.WAND ED.T. LUFT VOR.WAND ED.T. WASS.
14	660889 01	AIR FILTER SEAT	SEDE FILTRO ARIA	SIEGE FILTRE A AIR	LUFTFILTERHALTER
15	660888 01	AIR FILTER	FILTRO ARIA	FILTRE A AIR	LUFT FILTIER
16	660817 00	SLIDE, AIR FILTER	GUIDA FILTRO ARIA	GLISSIERE FILTRE A AIR	FUHRUNF FUR LUFTFILTIER
17	782092 11	BIN DOOR	SPORTELLO	PORTE CABINE	SPEICHERTUER
18	702559 00	REAR PANEL	PANNELLO POSTERIORE	PANNEAU POSTERIEUR	HINTERE ABDECKUNG
19	702301 00	METAL BRACKET FOR FITTING	SUPPORTO ATTACCHI	SUPPORT DE RACCORDS	METALLTRÄGER
20	650790 00	STUD	PERNO	AXE	STIFT
21	781475 03	TOP PANEL	PANNELLO SUPER. INOX	ENS. COUVERCLE	DECKEL GESAMTHEIT
22	660884 03	LEFT TOP CAP	TAPPO IN PLASTICA SINISTRO	CAPUCHON EN PLAST. GAUCHE	PLASTIK PROFEN LINK
23	660884 02	RIGHT TOP CAP	TAPPO IN PLASTICA DESTRO	CAPUCHON EN PLAST. DROITE	PLASTIK PROFEN RECHT
24	650806 00	REAR STUD	PERNO POSTERIORE	AXE ARRIÉRE	TRÄGEN – HINTEN
25	650976 00	SIMAG LOGO	TARGHETTA SIMAG	EMBLEME SIMAG	SIMAG ABGEBILDET
26	650976 21	SCN 75 LABEL	TARGHETTA SCN 75	EMBLEME SCN 75	SCN 75 ABGEBILDET
27	650382 02	LEG	PIEDE REGOLABILE	PIED RÉGLABE	GERÄTEFUSS
28	650071 00	ICE SCOOP	SESSOLA	SASSE	EISSCHAUFEL
29	060513 00	KIT WATER SUPPLY PIPE	KIT TUBO ALIM. ACQUA	KIT TUYAU D'ALIM. EAU	WASSER ANSCHLUSSCHLAUCH
30	060513 01	KIT WATER DRAIN PIPE	KIT TUBO SCARICO ACQUA	KIT TUYAU VIDANGE EAU	WASSER SLAUFSCHLAUCH
31	Z1ID011	ELBOW WITH RING NUT	CURVA CON GHIERA	COUDE AVEC BAGUE	KRUMMER

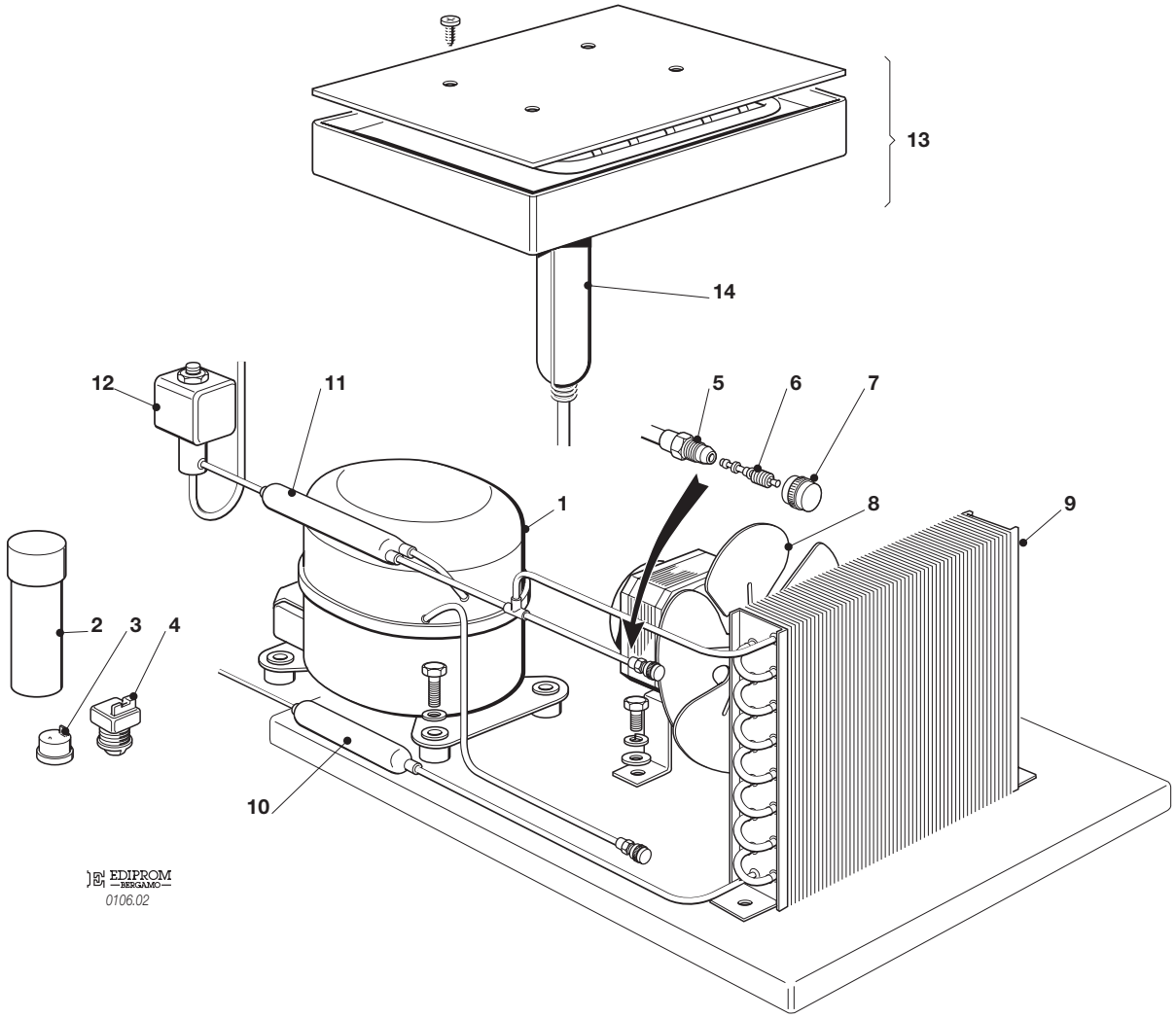
13
14
12
11
5
6
7
1
8
9
2
3
4
10
EDIPROM
BERGAMO
0106.02

SCN 75 - REFRIGERANT SYSTEM AIR COOLED - SISTEMA REFRIGERANTE RAFFR. AD ARIA
CIRCUIT FRIGORIFIQUE REFROID. PAR AIR - LUFTGEKÜHLT GEFRIERSYSTEM

ITEM NO POS. NO REP. NO REF. NO	PART NO CODICE REFERENCE STUECK NR	DESCRIPTION	DESCRIZIONE	DESIGNATION	BESCHREIBUNG
1	670099 02	COMPRESSOR	COMPRESSORE	COMPRESSEUR	KOMPRESSOR
2	620167 01	START CAPACITOR	CAPACITA' D'AVVIAMENTO	CAPACITE' DEMARRAGE	START KONDENSATOR
3	620057 44	PROTECTOR	PROTETTORE	PROTECTION	THERMOSCHUTZ
4	620058 39	RELAY	RELE'	RELAIS	ANLAUFRELAIS
5	650109 00	VALVE BODY	CORPO VALVOLA	CORPS DE VANNE	VENTILGEHAUSE
6	670012 00	VALVE PISTON	PISTONCINO VALVOLA	PISTON	VENTILKOLBEN
7	650106 00	VALVE CAP	CAPPUCCIO VALVOLA	CAPUCHON DE VANNE	VENTILKLAPPE
8	620491 02 620419 33	FAN MOTOR FAN BLADE	MOTOVENTILATORE VENTOLA	MOTO-VENTILATEUR HELICE	LÜFTERMOTOR FLÜGEL
9	620405 00	AIR COOLED CONDENSER	CONDENSATORE AD ARIA	CONDENSEUR	KONDENSATOR
10	630003 06	DRIER	FILTRO DEUMIDIFICATORE	FILTRE DESHYDRATEUR	TROCKNER
11	630020 01	MECHANICAL FILTER	FILTRO MECCANICO	FILTRE MECANIQUE	MECHANISCHFILTERN
12	620306 48 620306 27	HOT GAS VALVE COIL HOT GAS VALVE BODY	BOBINA VALVOLA GAS CALDO CORPO VALVOLA GAS CALDO	BOBINE VANNE GAZ CHAUDS CORP VANNE GAZ CHAUDS	HEISSGAZ VENTIL SPULE VENTILGEHAUSE
13	784692 00	EVAPORATOR ASSY	ASSIEME EVAPORATORE	ENS. EVAPORATEUR	VERDAMPFER
14	784632 06	ACCUMULATOR ASSY	ASSIEME ACCUMULATORE	ENS. ACCUMULATEUR	SAMMLER UND SAUGLEITUNGEN
*	620499 00	PRESSURE GAUGE	PRESSOSTATO	PRESSOSTAT	DRUCKWÄCHTER

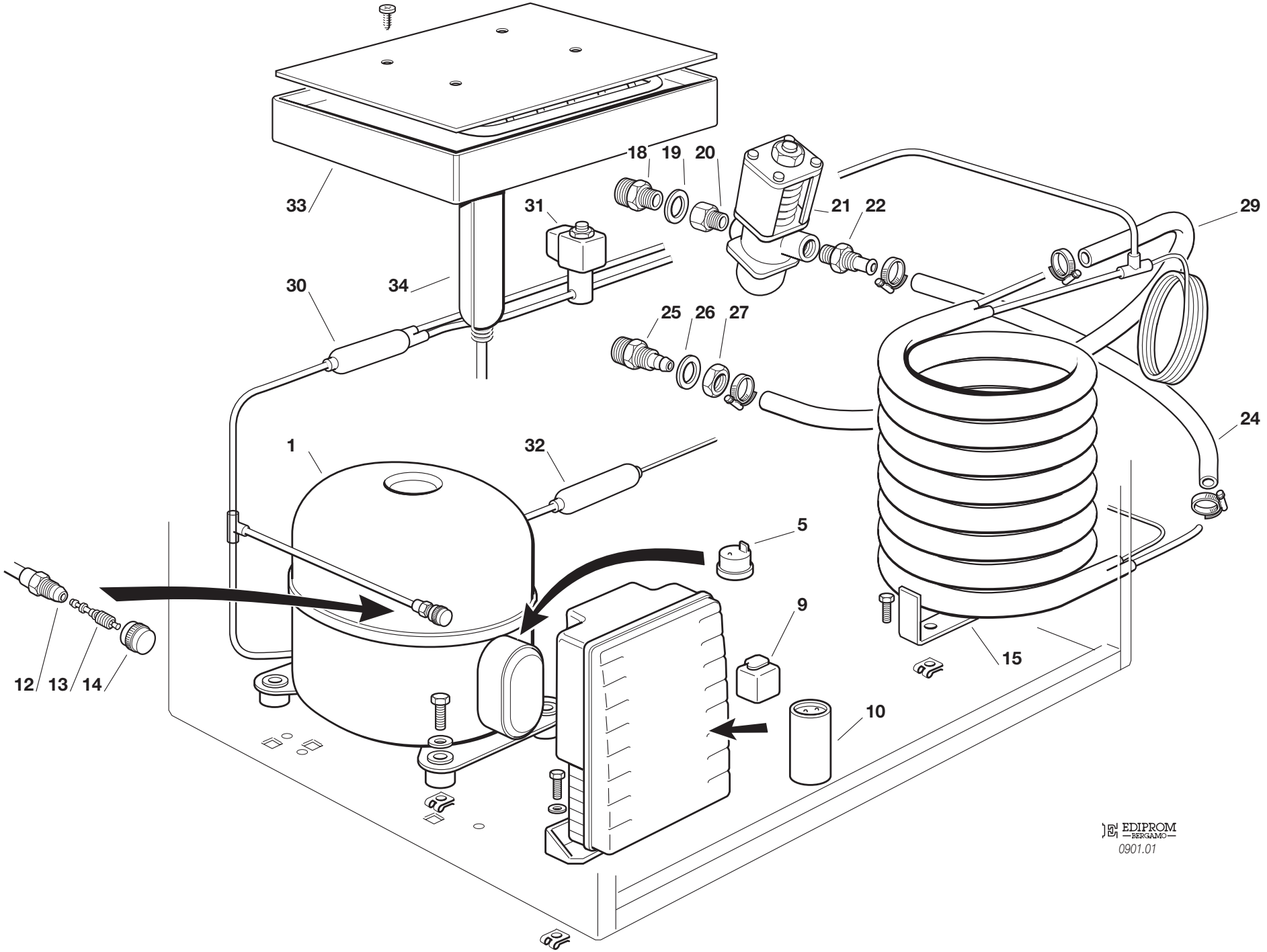
33
31
18
19
20
21
22
29
30
34
25
26
27
24
1
32
5
9
15
10
12
13
14
EDIPROM
BERGAMO
0901.01

SCN 75 - REFRIGERANT SYSTEM WATER COOLED - SISTEMA REFRIGERANTE RAFFR. AD ACQUA
CIRCUIT FRIGORIFIQUE REFROID. PAR EAU - WASSERGEKÜHLT GEFRIERSYSTEM

ITEM NO POS. NO REP. NO REF. NO	PART NO CODICE REFERENCE STUECK NR	DESCRIPTION	DESCRIZIONE	DESIGNATION	BESCHREIBUNG
1	670099 02	COMPRESSOR	COMPRESSORE	COMPRESSEUR	KOMPRESSOR
5	620057 44	PROTECTOR	PROTETTORE TERMICO	PROTECTION	THERMOSCHUTZ
9	620058 39	RELAY	RELE'	RELAIS	ANLAUFRELAIS
10	620167 01	START CAPACITOR	CAPACITA' D'AVVIAMENTO	CAPACITE' DEMARRAGE	START KONDENSATOR
12	650109 00	VALVE BODY	CORPO VALVOLA	CORPS DE VANNE	VENTILGEHAUSE
13	670012 00	VALVE PISTON	PISTONCINO VALVOLA	PISTON	VENTILKOLBEN
14	650106 00	VALVE CAP	CAPPUCCIO VALVOLA	CAPUCHON DE VANNE	VENTILKLAPPE
15	620495 02	WATER CONDENSER	CONDENSATORE AD ACQUA	CONDENSEUR A EAU	WASSER KONDENSATOR
18	400053 00	NUT	DADO	ECROU	MUTTER
19	400052 00	WASHER	RONDELLA	RONDELLE	SCHEIBE
20	733204 00	WATER INLET FITTING	RACCORDO INGRESSO ACQUA	RACCORD ARRIVE'E D'EAU	WASSER EINLAUFSTÜCK
21	620111 00	WATER REGUL. VALVE	VALVOLA PRESSOSTATICA	VANNE A EAU PRESSOSTATIQUE	WASSERREGLERVENTIL
22	783208 02	COUPLING	RACCORDO FLANGIATO	RACCORD SORTIE EAU	WASSERREGLEREABFLUSSTUECK
24	281900 01	TUBE	TUBO IN PVC PER METRO	TUYAU EN PLAST. POUR METRE	PLASTIK ROHR-PRO METER
25	660291 00	TEE TUBE		RACCORD EVACUATION 3/4 GAS	3/4 GAS SCHLAUCH
26	400031 00	FIBER WASHER	RONDELLA IN FIBRA	RONDELLE EN FIBRE	FIBER SCHEIBE
27	400030 01	NUT	DADO	ECROU	MUTTER
29	281900 01	TUBE	TUBO IN PVC PER METRO	TUYAU EN PLAST. POUR METRE	PLASTIK ROHR-PRO METER
30	630020 01	MECHANICAL FILTER	FILTRO MECCANICO	FIL TRE MECANIQUE	MECHANISCHFIL TERN
31	620306 48 620306 27	HOT GAS VALVE COIL HOT GAS VALVE BODY	BOBINA VALVOLA GAS CALDO CORPO VALVOLA GAS CALDO	BOBINE VANNE GAZ CHAUDS CORP VANNE GAZ CHAUDS	HEISSGAZ VENTIL SPULE VENTILGEHAUSE
32	630003 06	DRIER	FILTRO DEUMIDIFICATORE	FILTRE DESHYDRATEUR	TROCKNER
33	784692 00	EVAPORATOR ASSY	ASSIEME EVAPORATORE	ENS. EVAPORATEUR	VERDAMPFER
34	784632 06	ACCUMULATOR ASSY	ASSIEME ACCUMULATORE	ENS. ACCUMULATEUR	SAMMLER UND SAUGLEITUNGEN

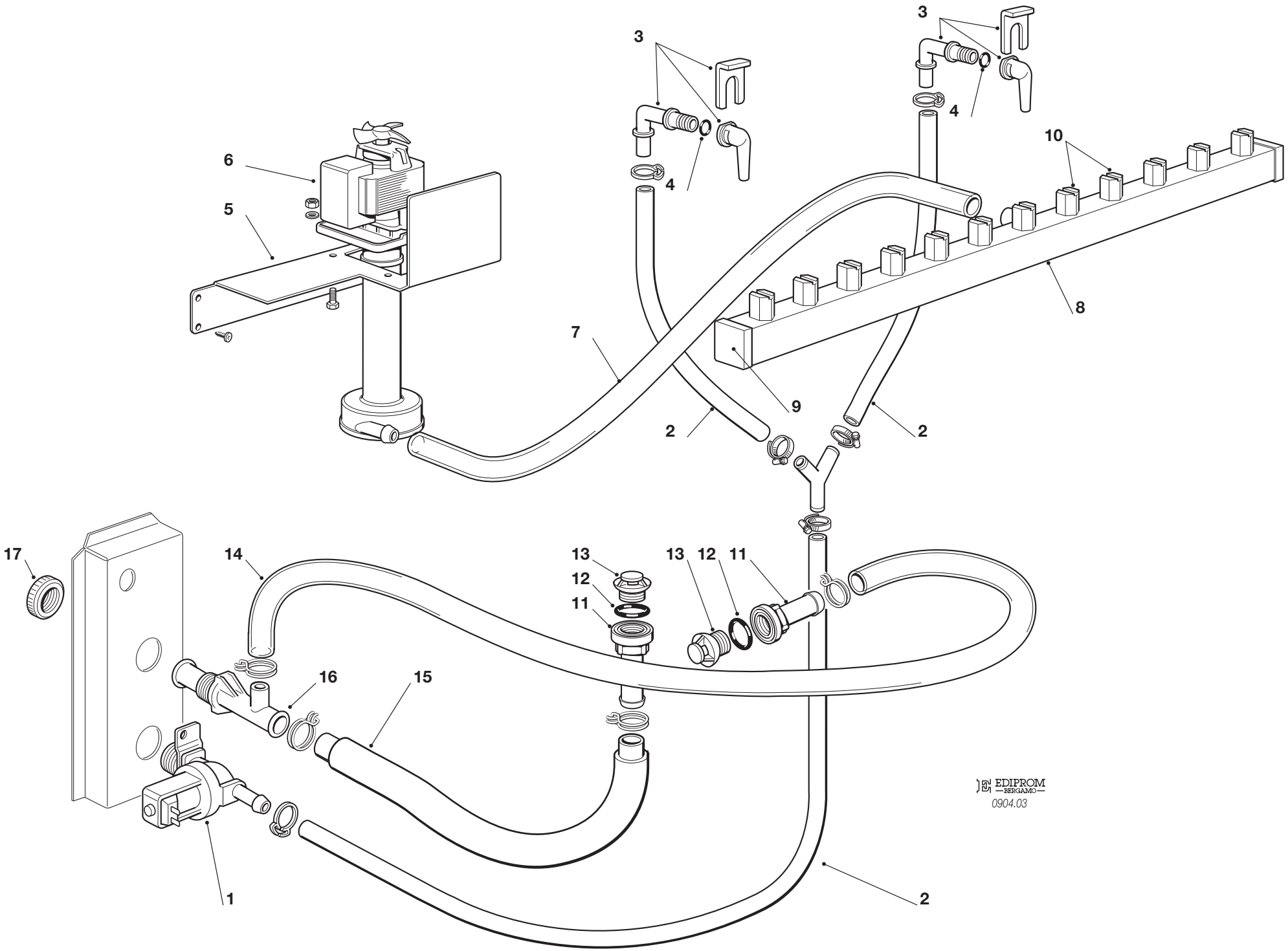
3
3
4
4
6
5
10
7
8
9
2
2
17
14
13
12
11
13
12
11
16
15
1
2
EDIPROM
BERGAMO
0904.03

SCN 75 - WATER SYSTEM - CIRCUITO IDRAULICO - CIRCUIT HYDRAULIQUE - WASSERSYSTEM

ITEM NO POS. NO REP. NO REF. NO	PART NO CODICE REFERENCE STUECK NR	DESCRIPTION	DESCRIZIONE	DESIGNATION	BESCHREIBUNG
1	650105 52	ELECTRIC VALVE - AIR COOLED	ELETTROVALVOLA	ELECTROVANNE	ELEKTROMAGNETVENTIL
2	281900 01	PLASTIC TUBE - PER METER	TUBO INGRESSO ACQUA	TUYAU EN PLASTIQUE - POUR MT.	PLASTIK ROHR - PRO METER
3	793172 00R	WATER INLET ELBOW ASSY	ASS. INGR. ACQUA A GOMITO	ENS. ENTREE EAU COUDEE	ABGENKELZULAUFROHR
4	640041 31	O-RING	GUARNIZIONE	JOINT TORIQUE	SIMMER RING
5	724333 00	METAL BRACKET	SUPPORTO POMPA	SUPPORT METALLIQUE	METAL TRAEGER
6	620430 06	WATER PUMP	POMPA	POMPE A EAU	WASSER PUMPE
7	610150 05	PUMP INLET WATER PIPE	TUBO MANDATA	TUYAU EVACUATION	ABFLUSSROHR
8	650665 06	SPRAY BAR	TUBO SPRUZZATORE	COLLECTEUR	KOLLEKTOR
9	660557 00	PLUG	UGELLO SPRUZZATORTE	BOUCHON POUR COLLECTEUR	STOPFEN
10	650558 00	SPRAYJET	SPRUZZATORI	GICLEURS	SPROHDOSEN
11	660219 01	DRAIN FITTING	SCARICO CELLA	TUYAU EVACUATION	ABFLUSSROHR
12	640134 00	O RING	O-RING	JOINT TORIQUE	SIMMER RING
13	660211 01	DRAIN FILTER	FILTRO SCARICO CELLA	FILTRE CABINE STOCKAGE	BEHÄLTER ABLAUF FILTER
14	610170 00	OVERFLOW DRAIN PIPE	TUBO SCARICO TROPPO PIENO	TUYAU VIDANGE CHAMBRE	BEHÄLTER ABLAUF
15	610148 19	BIN DRAIN PIPE	TUBO SCARICO CONTENITORE	TUYAU VIDANGE CONTENEUR	BEHÄLTERAUSLAUFSCHLAUCH
16	660224 00	WATER DRAIN FITTING	RACCORDO A "T"	RACCORD EVACUATION EAU	WASSERABFLUSSANSCHLUSSE
17	660535 00	PLASTIC RING NUT	GHIERA	COLLIER DE SERRAGE EN PLAST.	PLASTIKRING MUTTER

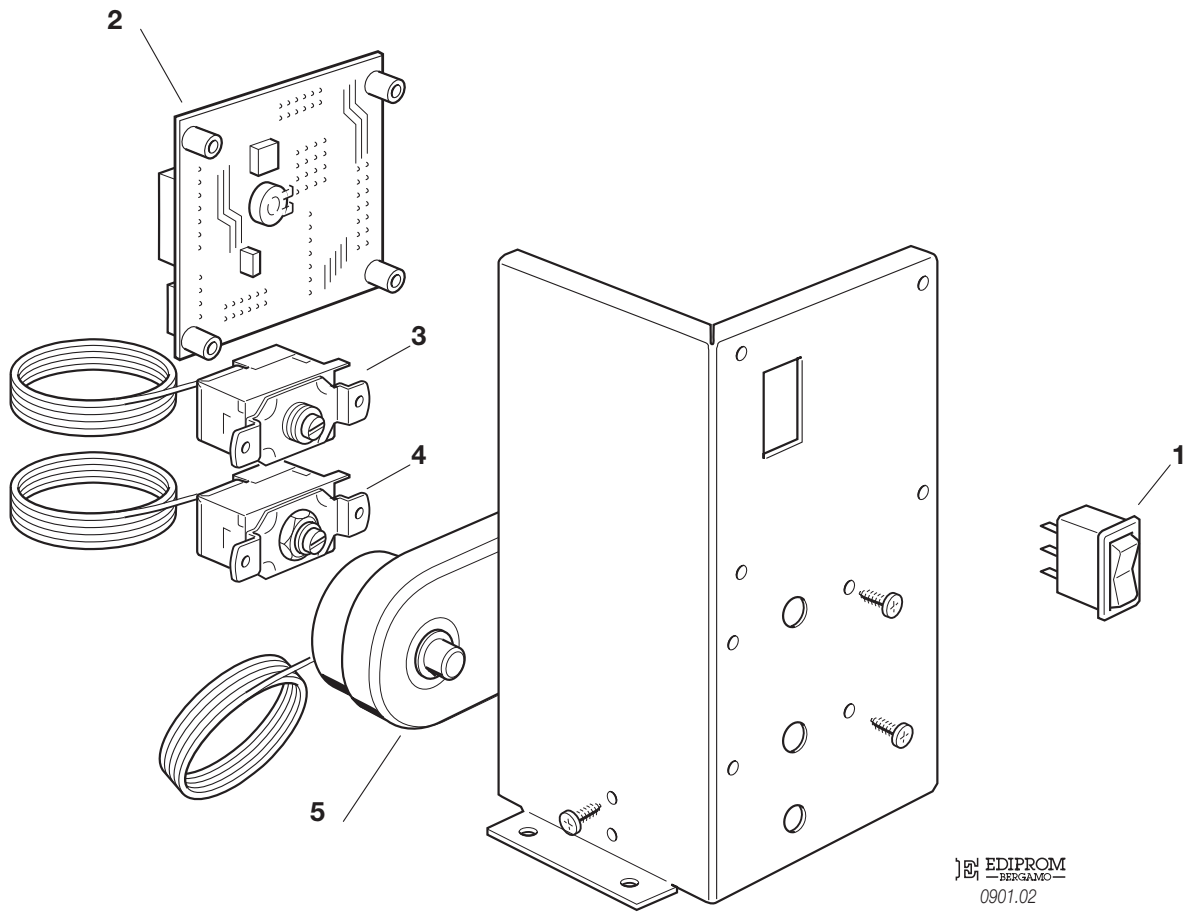

EDIPROM
BERGAMO
0901.02

SCN 75 - CONTROL BOX - SCATOLA DI CONTROLLO - BOITE ELECTRIQUE - SCHALTSCHRANK -

ITEM NO POS NO REP. NO REF. NO	PART NO CODICE REFERENCE STUECK NR	DESCRIPTION	DESCRIZIONE	DESIGNATION	BESCHREIBUNG
1	620453 00	SWITCH	INTERRUTTORE LUMINOSO	INTERRUPTEUR LUMINEUX	SCHALTER
2	620507 01	TIMER	TIMER	MINUTERIE	TIMER
3	620201 01	EVAPORATOR THERMOSTAT	TERMOSTATO EVAPORATORE	THERMOSTAT EVAPORATEUR	VERDAMPFERTHERMOSTAT
4	630005 00	BIN THERMOSTAT	TERMOSTATO CONTENITORE	THERMOSTAT CONTENEUR	BEHÄLTER THERMOSTAT
5	620443 02	THERMOSTAT - SAFETY	TERMOSTATO DI SICUREZZA	THERMOSTAT DE SECURITÉ	SICHERHEITS THERMOSTAT

SCN 75 - COMPRESSOR CHART - TABELLA COMPRESSORI - TABLEAU COMPRESSEUR - KOMPRESSOR KARTE

MODEL MODELLO MODELE MODELL	VOLTS TENSIONE TENSION SPANNUNG	COMPRESSOR MODEL MOD. COMPRESSORE TYPE COMPRESSEUR KOMPRESSOR TYP	COMPRESSOR COMPRESSORE COMPRESSEUR KOMPRESSOR	RELAY RELE' RELAIS RELAIS	PROTECTOR PROTETTORE PROTECTEUR SCHUTZGERAT	START CAPACITOR CAPACITA D'AVV. CAPACITE DE DEMARRAGE START KONDENSATOR
SCN 75	230/60/1	CAJ4461	670099 07	620057 48	620058 78	620167 01
SCN 75	230/50/1	CAJ4461Y	670099 02	620057 44	620058 39	620167 01

SCN 75 - ELECTRIC COMPONENTS CHART - TABELLA COMPONENTI ELETTRICI TABLEAU COMPOSANTS ELECTRIQUE - ELEKTRISCHEKARTE

MODEL MODELLO MODELE MODELL	VOLTS TENSIONE TENSION SPANNUNG	WATER PUMP POMPA POMPE A EAU WASSER PUMPE	FAN MOTOR ONLY MOTORE VENTILATORE MOTEUR VENTILATEUR LUFTER MOTOR	WATER INLET VALVE VALV. INGR. ACQUA V.E.M. ARRIVEE EAU WASSEREIN. VENTIL	HOT GAS VALVE COIL BOBINA VALVOLA GAS CALDO BOBINE V.E.M. GAZ CHAUDS HEISSGAZ VENTIL SPULE	TIMER TIMER MINUTERIE TIMER
SCN 75	230/60/1	620430 08	620419 02	650105 66	620306 48	620507 01
SCN 75	230/50/1	620430 06	620419 02	650105 66	620306 48	620507 01

SIMAG
ICE MACHINES

www.simag.it

SIMAG
via Risorgimento, 4
20017 Mazzo di Rho (MI) - Italy
Tel. +39 02 93900215 (Commerciale - Sales Dept.)
Tel. +39 02 93960357 (Assistenza - Service Dept.)
Fax +39 02 93900226 (Commerciale - Sales Dept.)
Fax +39 02 93960366 (Assistenza - Service Dept.)
e-mail: sales@simag.it
e-mail: service@simag.it

Singapore Office
SIMAG FAR EAST
627A Aljunied Road
04-04 Biztech Centre
Singapore 389842
Tel. ++65 6738 5393
Fax ++65 6738 1959
e-mail: scotsice@singnet.com.sg

Certified ISO 9001
TOTAL QUALITY