SPARE PARTS MANUAL / MANUAL DE RECAMBIOS / MANUEL PIÈCES RECHANGE

# Tumble dryers
# Secadoras
# Sécheuses

MODELS / MODELOS / MODÈLES

**SR-45**
**SR-60**
**SR-80**

FAGOR

FAGOR INDUSTRIAL

**DES40332**

FAGOR

# ANALOGIC BODY
# MUEBLE ANALÓGICO
# MEUBLE ANALOGIQUE

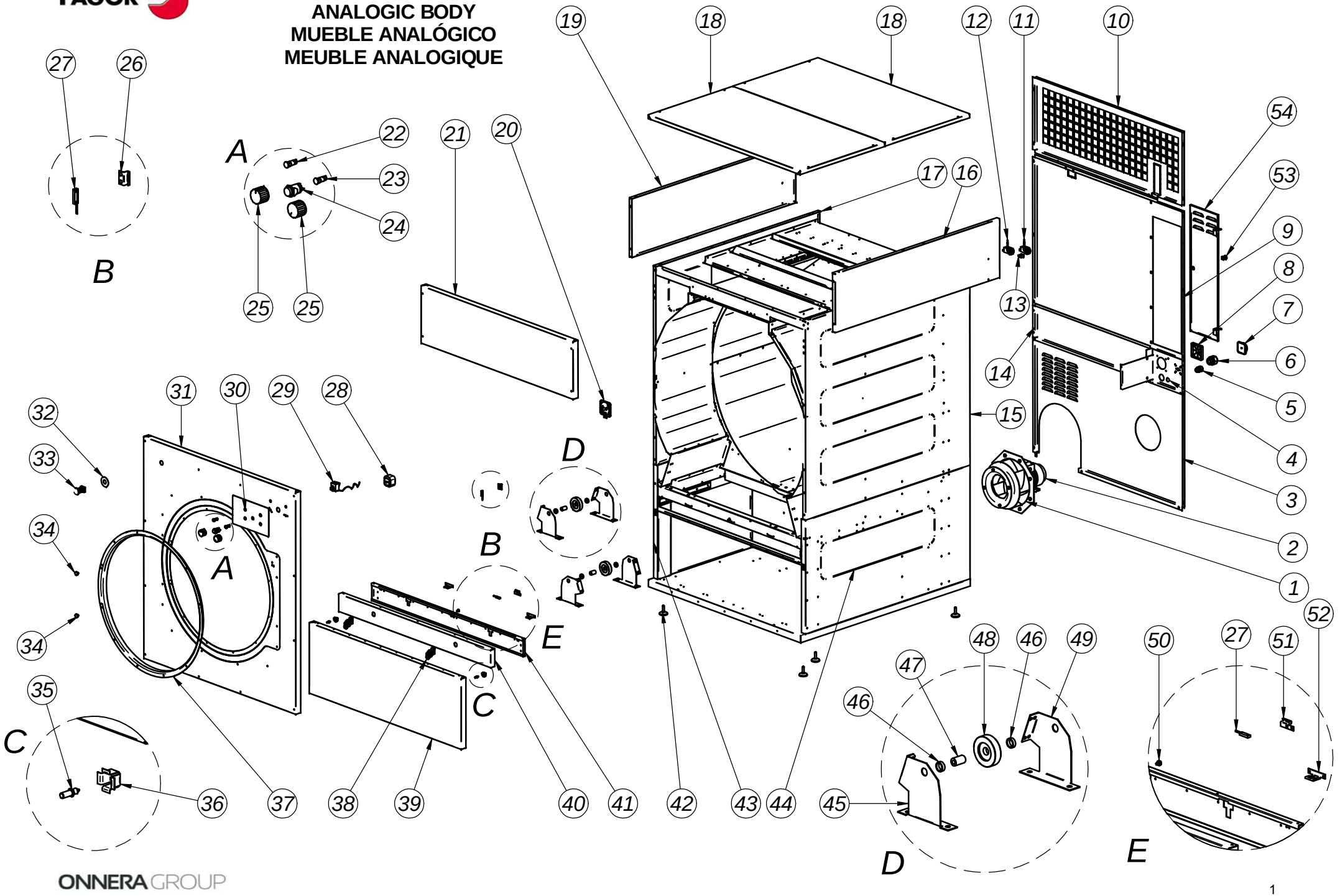

FAGOR

## ANALOGIC BODY
## MUEBLE ANALÓGICO
## MEUBLE ANALOGIQUE

| POS. | REF. | DESCRIPTION | DESCRIPCIÓN | DESCRIPTION | SR-45 | SR-60 | SR-80 | RECOM. |
|---|---|---|---|---|---|---|---|---|
| 1 | 12149166 | FAN | TURBINA | TURBINE | 1 | 1 | 1 | X |
| 2 | 12149167 | MOTOR 1.1Kw 50Hz 3PH | MOTOR 1.1Kw 50Hz 3F | MOTEUR 1.1Kw 50Hz 3PH | 1 | 1 | 1 | X |
| 2 | 12149230 | MOTOR 1.1Kw 60Hz 3PH | MOTOR 1.1Kw 60Hz 3F | MOTEUR 1.1Kw 60Hz 3PH | 1 | 1 | 1 | X |
| 3 | 12145336 | BACK LOWER LID | TAPA POSTERIOR INFERIOR | PANNEAU ARRIÈRE INFÉRIEUR | 1 | 1 | 1 | |
| 4 | 12145333 | BACK LIDS LEFT REINFORCEMENT | REFUERZO IZQUIERDO TAPAS POSTERIORES | RENFORT GAUCHE PANNEAU ARRIÈRE | 1 | 1 | 1 | |
| 5 | 12095959 | CAPS TOP PG-29 (ELECTRIC) | PRENSA ESTOPA PG-29 (ELÉCTRICO) | PRESSE-ÉTOUPE PG-29 (ÉLECTRIQUE) | 1 | 1 | 1 | |
| 6 | 12035015 | CAPS TOP PG-16 (GAS-STEAM) | PRENSA ESTOPA PG-16 (GAS-VAPOR) | PRESSE-ÉTOUPE PG-16 (GAZ-VAPEUR) | 1 | 1 | 1 | |
| 7 | 12110103 | MAIN SWITCH 63A (ELECTRIC) | INTERRUPTOR GENERAL 63A (ELÉCTRICA) | COMMUTATEUR GENERAL 63A (ÉLECTRIQUE) | 1 | 1 | 1 | |
| 7 | 12116662 | MAIN SWITCH 25A (GAS-STEAM) | INTERRUPTOR GENERAL 25A (GAS/VAPOR) | COMMUTATEUR GENERAL 25A (GAZ-VAPEUR) | 1 | 1 | 1 | |
| 8 | 12032726 | FAN COVER 80X80 | TAPA VENTILADOR 80X80 | COUVERCLE DU VENTILATEUR 80X80 | 1 | 1 | 1 | |
| 9 | 12146823 | BACK CENTRAL LID | TAPA POSTERIOR CENTRAL | PANNEAU ARRIÈRE CENTRAL | 1 | 1 | 1 | |
| 10 | 12145337 | BACK UPPEER LID (GAS AND ELECTRIC HEATING) | TAPA POSTERIOR SUPERIOR (GAS Y ELECTRICA) | PANNEAU ARRIÈRE SUPÉRIEUR (GAZ ET ÉLECTRIQUE) | 1 | 1 | 1 | |
| 10 | 12145397 | BACK UPPEER LID (STEAM HEATING) | TAPA POSTERIOR SUPERIOR (VAPOR) | PANNEAU ARRIÈRE SUPÉRIEUR (VAPEUR) | 1 | 1 | 1 | |
| 11 | 12126296 | SAFETY THERMOSTAT 220º (ELECTRIC) | TERMOSTATO SEGURIDAD 220º (ELÉCTICO) | THERMOSTAT SÉCURITÉ 220º (ÉLECTRIQUE) | 1 | 1 | 1 | X |
| 11 | 12135898 | SAFETY THERMOSTAT 180º (GAS-STEAM) | TERMOSTATO SEGURIDAD 180º (GAS-VAPOR) | THERMOSTAT SÉCURITÉ 180º (GAZ-VAPEUR) | 1 | 1 | 1 | X |
| 12 | 12110160 | SAFETY THERMOSTAT 110º | TERMOSTATO SEGURIDAD 110º | THERMOSTAT SÉCURITÉ 110º | 1 | 1 | 1 | X |
| 13 | 12016811 | RESET RECTANGULAR BUTTON (GAS) | PULSADOR RESET (GAS) | TOUCHE RESET (GAZ) | 1 | 1 | 1 | X |
| 14 | 12146822 | BACK LIDS RIGHT REINFORCEMENT | REFUERZO DERECHO TAPAS POSTERIORES | RENFORT DROIT PANNEAU ARRIÈRE | 1 | 1 | 1 | |
| 15 | 12145909 | CENTRAL RIGHT SIDE PANNEL | PANEL LATERAL DERECHO CENTRAL | PANNEAU LATÉRAL DROIT CENTRAL | 1 | ... | ... | |
| 15 | 12145919 | CENTRAL RIGHT SIDE PANNEL | PANEL LATERAL DERECHO CENTRAL | PANNEAU LATÉRAL DROIT CENTRAL | ... | 1 | ... | |
| 15 | 12145926 | CENTRAL RIGHT SIDE PANNEL | PANEL LATERAL DERECHO CENTRAL | PANNEAU LATÉRAL DROIT CENTRAL | ... | ... | 1 | |
| 16 | 12145911 | UPPER RIGHT SIDE PANNEL | PANEL LATERAL DERECHO SUPERIOR | PANNEAU LATÉRAL DROIT SUPÉRIEUR | 1 | ... | ... | |
| 16 | 12145921 | UPPER RIGHT SIDE PANNEL | PANEL LATERAL DERECHO SUPERIOR | PANNEAU LATÉRAL DROIT SUPÉRIEUR | ... | 1 | ... | |
| 16 | 12145928 | UPPER RIGHT SIDE PANNEL | PANEL LATERAL DERECHO SUPERIOR | PANNEAU LATÉRAL DROIT SUPÉRIEUR | ... | ... | 1 | |
| 17 | 12145910 | CENTRAL LEFT SIDE PANNEL | PANEL LATERAL IZQUIERDO CENTRAL | PANNEAU LATÉRAL GAUCHE CENTRAL | 1 | ... | ... | |
| 17 | 12145920 | CENTRAL LEFT SIDE PANNEL | PANEL LATERAL IZQUIERDO CENTRAL | PANNEAU LATÉRAL GAUCHE CENTRAL | ... | 1 | ... | |
| 17 | 12145927 | CENTRAL LEFT SIDE PANNEL | PANEL LATERAL IZQUIERDO CENTRAL | PANNEAU LATÉRAL GAUCHE CENTRAL | ... | ... | 1 | |
| 18 | 12145914 | CEILING | TECHO | PLAFOND | 2 | ... | ... | |
| 18 | 12145923 | CEILING | TECHO | PLAFOND | ... | 2 | ... | |
| 18 | 12145930 | CEILING | TECHO | PLAFOND | ... | ... | 2 | |
| 19 | 12145912 | UPPER LEFT SIDE PANNEL | PANEL LATERAL IZQUIERDO SUPERIOR | PANNEAU LATÉRAL GAUCHE SUPÉRIEUR | 1 | ... | ... | |
| 19 | 12145922 | UPPER LEFT SIDE PANNEL | PANEL LATERAL IZQUIERDO SUPERIOR | PANNEAU LATÉRAL GAUCHE SUPÉRIEUR | ... | 1 | ... | |
| 19 | 12145929 | UPPER LEFT SIDE PANNEL | PANEL LATERAL IZQUIERDO SUPERIOR | PANNEAU LATÉRAL GAUCHE SUPÉRIEUR | ... | ... | 1 | |
| 20 | 12049069 | DIFFERENTIAL AIR PRESSURE | PRESOSTATO DIFERENCIAL | PRESSOSTAT DIFFÉRENTIEL | 1 | 1 | 1 | X |
| 21 | 12145913 | UPPER FRONT PANNEL JOINT | TAPA FRONTAL SUPERIOR | PANNEAU FRONTAL SUPÉRIEUR | 1 | 1 | 1 | |
| 22 | 12036462 | RED PILOT D13 | PILTOTO D13 ROJO | VOYANT ROUGE | 1 | 1 | 1 | X |
| 23 | 12036324 | GREEN PILOT D13 | PILOTO D13 VERDE | VOYANT VERT | 1 | 1 | 1 | X |
| 24 | 12034807 | GREEN LIGHT PUSH-BUTTON | PULSADOR BIPOLAR LUMINOSO VERDE | BOUTON BIPOLAIRE LUMINEUX VERT | 1 | 1 | 1 | X |
| 25 | 12035322 | THERMOSTAT TIMER | MANDO RELOJ/TERMOSTATO | COMMANDE HORLAGE/THERMOSTAT | 2 | 2 | 1 | X |
| 26 | 12145726 | REED SENSOR SUPPORT | SOPORTE SENSOR REED | SUPPORT CAPTEUR REED | 1 | 1 | 1 | |
| 27 | 12090513 | REED RECTANGULAR SENSOR | SENSOR REED RECTANGULAR | CAPTEUR REED RECTANGULAIRE | 2 | 2 | 2 | X |
| 28 | 12049916 | CLOCK WITH DELAY 60" | RELOJ CON RETARDADOR DE 60" | RETARDATEUR DE 60" | 1 | 1 | 1 | X |
| 29 | 12032432 | THERMOSTAT CAP. 2,9 M.INV 90º | TERMOSTATO CAP. 2,9 M. INV 90º | THERMOSTAT CAP. 2,9 M INV 90º | 1 | 1 | 1 | X |
| 30 | 12125786 | ANALOGIC STICKER | CARÁTULA ANALÓGICA | ADHÉSIF ANALOGIQUE | 1 | 1 | 1 | |
| 31 | 12151301 | FRONT PANNEL | TAPA FONTRAL | PANNEAU FRONTAL | 1 | 1 | 1 | |
| 32 | 12036726 | EMERGENCY STOP ADHESIVE | ANAGRAMA PARO EMERGENCIA | ANAGRAMME D'URGENCE | 1 | 1 | 1 | |
| 33 | 12037962 | EMERGENCY PUSH-BUTTON | PULSADOR PARO EMERGENCIA | BOUTON D'URGENCE | 1 | 1 | 1 | |
| 34 | 12049248 | MAGNET Ø20 | IMÁN Ø20 | AIMANT Ø20 | 2 | 2 | 2 | X |
| 35 | 12130795 | CLIP LOCK DOOR | VASTAGO CIERRE CLIP | FERMETURE PAR CLIP | 2 | 2 | 2 | |
| 36 | 12129675 | CLIP HOLDER | RECEPTÁCULO CLIP | RÉCEPTACLE CLIP | 2 | 2 | 2 | |
| 37 | 12141414 | INLET HOOP | ARO REFUERZO ENTRADA | ANNEAU RENFORT ENTRÉE | 1 | 1 | 1 | |
| 38 | 12146772 | FLUFF FILTER LID HANDLE | TIRADOR TAPA FILTRO BORRA | POIGNÉE COUVERCLE FILTRE PELUCHE | 2 | 2 | 2 | X |
| 39 | 12151302 | LOWER FRONT PANNEL | TAPA FRONTAL INFERIOR | PANNEAU FRONTAL INFÉRIEUR | 1 | 1 | 1 | |
| 40 | 12145916 | FLUFF FILTER LID | TAPA FILTRO BORRA | PANNEAU FILTRE PELUCHE | 1 | 1 | 1 | |
| 41 | 12145322 | FLUFF FILTER LID SUPPORT | SOPORTE TAPA FILTRO BORRA | SUPPORT PANNEAU FILTRE PELUCHE | 1 | 1 | 1 | |
| 42 | 12034030 | LEVELLING FEET | PIÉS DE NIVELACIÓN | PIEDS DE NIVELLEMENT | 4 | 4 | 4 | |
| 43 | 12145908 | LEFT LOWER SIDE PANNEL | PANEL LATERAL IZQUIERDO INFERIOR | PANNEAU LATÉRAL GAUCHE INFÉRIEUR | 1 | ... | ... | |
| 43 | 12145918 | LEFT LOWER SIDE PANNEL | PANEL LATERAL IZQUIERDO INFERIOR | PANNEAU LATÉRAL GAUCHE INFÉRIEUR | ... | 1 | ... | |
| 43 | 12145925 | LEFT LOWER SIDE PANNEL | PANEL LATERAL IZQUIERDO INFERIOR | PANNEAU LATÉRAL GAUCHE INFÉRIEUR | ... | ... | 1 | |
| 44 | 12145907 | RIGHT LOWER SIDE PANNEL | PANEL LATERAL DERECHO INFERIOR | PANNEAU LATÉRAL DROIT INFÉRIEUR | 1 | ... | ... | |
| 44 | 12145917 | RIGHT LOWER SIDE PANNEL | PANEL LATERAL DERECHO INFERIOR | PANNEAU LATÉRAL DROIT INFÉRIEUR | ... | 1 | ... | |
| 44 | 12145924 | RIGHT LOWER SIDE PANNEL | PANEL LATERAL DERECHO INFERIOR | PANNEAU LATÉRAL DROIT INFÉRIEUR | ... | ... | 1 | |
| 45 | 12145183 | FRONT WHEEL SUPPORT | SOPORTE DELANTERO RUEDA | SUPPORT DE ROUE AVANT | 2 | 2 | 2 | |
| 46 | 12141416 | WHEEL CAP | CASQUILLO | DOUILLE | 4 | 4 | 4 | |
| 48 | 12097614 | WHEEL Ø80 | RUEDA Ø80 | ROUE Ø80 | 2 | 2 | 2 | X |
| 47 | 12141415 | WHEEL SHAFT | EJE RUEDA | AXE DE LA ROUE | 2 | 2 | 2 | |
| 49 | 12145182 | REAR WHEEL SUPPORT | SOPORTE TRASERO RUEDA | SUPPORT DE ROUE ARRIÈRE | 2 | 2 | 2 | |
| 50 | 12096891 | MAGNET Ø13 | IMÁN Ø13 | AIMANT Ø13 | 1 | 1 | 1 | X |
| 51 | 12145377 | REED SENSOR SUPPORT | SOPORTE SENSOR REED | SUPPORT CAPTEUR REED | 1 | 1 | 1 | |
| 52 | 12145331 | FLUFF FILTER LID HANDLE SUPPORT | SOPORTE TIRADOR TAPA FILTRO BORRA | SUPPORT POIGNÉE COUVERCLE FILTRE PELUCHE | 2 | 2 | 2 | |
| 53 | 12033434 | LOCK WITH KEY | CIERRE CON LLAVE | SERRURE AVEC CLÉ | 1 | 1 | 1 | X |
| 54 | 12146824 | ELECTRIC BOARD DOOR | PUERTA CUADRO ELECTRICO | PORTE DU PANNEAU ÉLECTRIQUE | 1 | 1 | 1 | |

FAGOR

# DIGITAL BODY
# MUEBLE DIGITAL
# MEUBLE DIGITAL

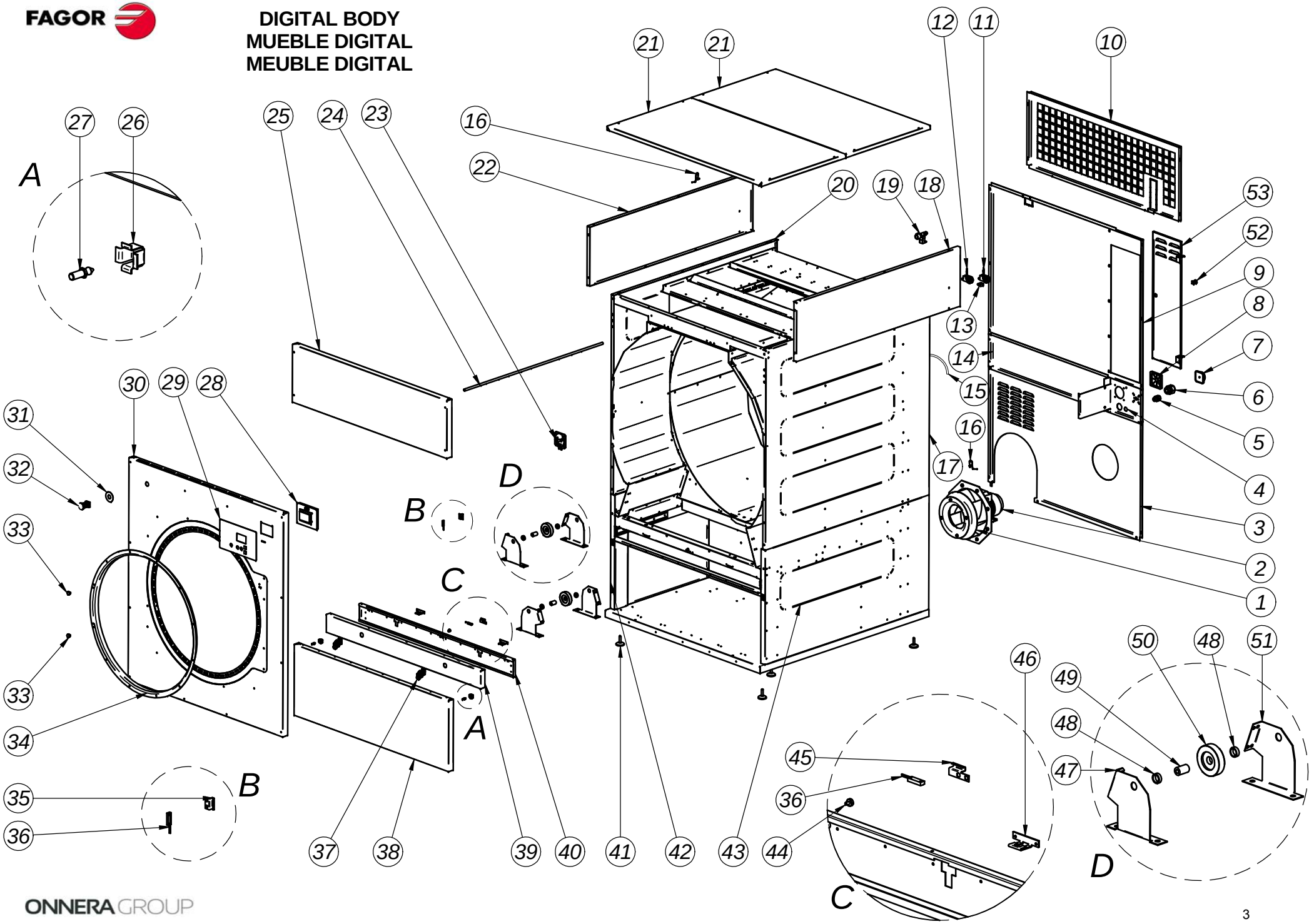

FAGOR

## DIGITAL BODY
## MUEBLE DIGITAL
## MEUBLE DIGITAL

| POS. | REF. | DESCRIPTION | DESCRIPCIÓN | DESCRIPTION | SR-45 | SR-60 | SR-80 | RECOM. |
|---|---|---|---|---|---|---|---|---|
| 1 | 12149166 | FAN | TURBINA | TURBINE | 1 | 1 | 1 | X |
| 2 | 12149167 | MOTOR 1.1Kw 50Hz 3PH | MOTOR 1.1Kw 50Hz 3F | MOTEUR 1.1Kw 50Hz 3PH | 1 | 1 | 1 | X |
| 2 | 12149230 | MOTOR 1.1Kw 60Hz 3PH | MOTOR 1.1Kw 60Hz 3F | MOTEUR 1.1Kw 60Hz 3PH | 1 | 1 | 1 | |
| 3 | 12145199 | BACK LOWER LID | TAPA POSTERIOR INFERIOR | PANNEAU ARRIÈRE INFÉRIEUR | 1 | 1 | 1 | |
| 4 | 12145194 | BACK LIDS LEFT REINFORCEMENT | REFUERZO IZQUIERDO TAPAS POSTERIORES | RENFORT GAUCHE PANNEAU ARRIÈRE | 1 | 1 | 1 | |
| 5 | 12095959 | CAPS TOP PG-29 (ELECTRIC) | PRENSA ESTOPA PG-29 (ELÉCTRICO) | PRESSE-ÉTOUPE PG-29 (ELECTRIQUE) | 1 | 1 | 1 | |
| 6 | 12035015 | CAPS TOP PG-16 (GAS-STEAM) | PRENSA ESTOPA PG-16 (GAS-VAPOR) | PRESSE-ÉTOUPE PG-16 (GAZ-VAPEUR) | 1 | 1 | 1 | |
| 7 | 12110103 | MAIN SWITCH 63A (ELECTRIC) | INTERRUPTOR GENERAL 63A (ELÉCTRICA) | COMMUTATEUR GENERAL 63A (ELECTRIQUE) | 1 | 1 | 1 | |
| 7 | 12116662 | MAIN SWITCH 25A (GAS-STEAM) | INTERRUPTOR GENERAL 25A (GAS/VAPOR) | COMMUTATEUR GENERAL 25A (GAZ-VAPEUR) | 1 | 1 | 1 | |
| 8 | 12032726 | FAN COVER 80X80 | TAPA VENTILADOR 80X80 | COUVERCLE DU VENTILATEUR 80X80 | 1 | 1 | 1 | |
| 9 | 12146823 | BACK CENTRAL LID | TAPA POSTERIOR CENTRAL | PANNEAU ARRIÈRE CENTRAL | 1 | 1 | 1 | |
| 10 | 12145337 | BACK UPPEER LID (GAS AND ELECTRIC HEATING) | TAPA POSTERIOR SUPERIOR (GAS Y ELECTRICA) | PANNEAU ARRIÈRE SUPÉRIEUR (GAZ ET ÉLECTRIQUE) | 1 | 1 | 1 | |
| 10 | 12145397 | BACK UPPEER LID (STEAM HEATING) | TAPA POSTERIOR SUPERIOR (VAPOR) | PANNEAU ARRIÈRE SUPÉRIEUR (VAPEUR) | 1 | 1 | 1 | |
| 11 | 12126296 | SAFETY THERMOSTAT 220º (ELECTRIC) | TERMOSTATO SEGURIDAD 220º (ELÉCTICO) | THERMOSTAT SÉCURITÉ 220º (ÉLECTRIQUE) | 1 | 1 | 1 | X |
| 11 | 12135898 | SAFETY THERMOSTAT 180º (GAS-STEAM) | TERMOSTATO SEGURIDAD 180º (GAS-VAPOR) | THERMOSTAT SÉCURITÉ 180º (GAZ-VAPEUR) | 1 | 1 | 1 | X |
| 12 | 12110160 | SAFETY THERMOSTAT 110º | TERMOSTATO SEGURIDAD 110º | THERMOSTAT SÉCURITÉ 110º | 1 | 1 | 1 | X |
| 13 | 12016811 | RESET RECTANGULAR BUTTON (GAS) | PULSADOR RESET (GAS) | TOUCHE RESET (GAZ) | 1 | 1 | 1 | X |
| 14 | 12146822 | BACK LIDS RIGHT REINFORCEMENT | REFUERZO DERECHO TAPAS POSTERIORES | RENFORT DROIT PANNEAU ARRIÈRE | 1 | 1 | 1 | |
| 15 | 12146025 | HOSE Ø12X18 (ANTI FIRE) | MANGUERA Ø12X18 (ANTI INCENDIO) | TUYAU Ø12X18 (ANTI FEU) | 0.3m | 0.3m | 0.3m | |
| 16 | 12031344 | TEMPERATURE PROBE | SONDA DE TEMPERATURA | SONDE DE TEMPERATURE | 2 | 2 | 2 | X |
| 17 | 12145909 | CENTRAL RIGHT SIDE PANNEL | PANEL LATERAL DERECHO CENTRAL | PANNEAU LATÉRAL DROIT CENTRAL | 1 | … | … | |
| 17 | 12145919 | CENTRAL RIGHT SIDE PANNEL | PANEL LATERAL DERECHO CENTRAL | PANNEAU LATÉRAL DROIT CENTRAL | … | 1 | … | |
| 17 | 12145926 | CENTRAL RIGHT SIDE PANNEL | PANEL LATERAL DERECHO CENTRAL | PANNEAU LATÉRAL DROIT CENTRAL | … | … | 1 | |
| 18 | 12145911 | UPPER RIGHT SIDE PANNEL | PANEL LATERAL DERECHO SUPERIOR | PANNEAU LATÉRAL DROIT SUPERIEUR | 1 | … | … | |
| 18 | 12145921 | UPPER RIGHT SIDE PANNEL | PANEL LATERAL DERECHO SUPERIOR | PANNEAU LATÉRAL DROIT SUPERIEUR | … | 1 | … | |
| 18 | 12145928 | UPPER RIGHT SIDE PANNEL | PANEL LATERAL DERECHO SUPERIOR | PANNEAU LATÉRAL DROIT SUPERIEUR | … | … | 1 | |
| 10 | 12025161 | ELECTROVALVE | ELECTROVÁLVULA | ELECTROVÁLVULA | 1 | 1 | 1 | X |
| 20 | 12145910 | CENTRAL LEFT SIDE PANNEL | PANEL LATERAL IZQUIERDO CENTRAL | PANNEAU LATÉRAL GAUCHE CENTRAL | 1 | … | … | |
| 20 | 12145920 | CENTRAL LEFT SIDE PANNEL | PANEL LATERAL IZQUIERDO CENTRAL | PANNEAU LATÉRAL GAUCHE CENTRAL | … | 1 | … | |
| 20 | 12145927 | CENTRAL LEFT SIDE PANNEL | PANEL LATERAL IZQUIERDO CENTRAL | PANNEAU LATÉRAL GAUCHE CENTRAL | … | … | 1 | |
| 21 | 12145914 | CEILING | TECHO | PLAFOND | 2 | … | … | |
| 21 | 12145923 | CEILING | TECHO | PLAFOND | … | 2 | … | |
| 21 | 12145930 | CEILING | TECHO | PLAFOND | … | … | 2 | |
| 22 | 12145912 | UPPER LEFT SIDE PANNEL | PANEL LATERAL IZQUIERDO SUPERIOR | PANNEAU LATÉRAL GAUCHE SUPERIEUR | 1 | … | … | |
| 22 | 12145922 | UPPER LEFT SIDE PANNEL | PANEL LATERAL IZQUIERDO SUPERIOR | PANNEAU LATÉRAL GAUCHE SUPERIEUR | … | 1 | … | |
| 22 | 12145929 | UPPER LEFT SIDE PANNEL | PANEL LATERAL IZQUIERDO SUPERIOR | PANNEAU LATÉRAL GAUCHE SUPERIEUR | … | … | 1 | |
| 23 | 12049069 | DIFFERENTIAL AIR PRESSURE | PRESOSTATO DIFERENCIAL | PRESSOSTAT DIFFÉRENTIEL | 1 | 1 | 1 | X |
| 24 | 12145129 | FIRE PREVENTION TUBE | TUBO DIFUSOR ANTIINCENDIO | TUBE PREVENTION DES INCENDES | 1 | 1 | 0 | |
| 25 | 12145913 | UPPER FRONT PANNEL JOINT | TAPA FRONTAL SUPERIOR | PANNEAU FRONTAL SUPERIEUR | 1 | 1 | 1 | |
| 26 | 12129675 | CLIP HOLDER | RECEPTÁCULO CLIP | RÉCEPTACLE CLIP | 2 | 2 | 2 | |
| 27 | 12130795 | CLIP LOCK DOOR | VASTAGO CIERRE CLIP | FERMETURE PAR CLIP | 2 | 2 | 2 | |
| 28 | 12096630 | PSM MICROPROCESSOR | MICROPROCESADOR PSM | MICROPROCESSEUR PSM | 1 | 1 | 1 | X |
| 29 | 12096690 | DIGITAL STICKER | CARÁTULA DIGITAL | ADHÉSIF DIGITAL | 1 | 1 | 1 | |
| 30 | 12151299 | FRONT PANNEL **STANDARD** | TAPA FRONTAL **STANDARD** | PANNEAU FRONTAL **STANDARD** | 1 | 1 | 1 | |
| 30 | 12151300 | FRONT PANNEL **RECIRCULATION** | TAPA FRONTAL **RECIRCULACIÓN** | PANNEAU FRONTAL **RECIRCULATION** | 1 | 1 | 1 | |
| 31 | 12036726 | EMERGENCY STOP ADHESIVE | ANAGRAMA PARO EMERGÉNCIA | ANAGRAMME D'URGENCE | 1 | 1 | 1 | |
| 32 | 12037962 | EMERGENCY PUSH-BUTTON | PULSADOR PARO EMERGÉNCIA | BOUTON D'URGENCE | 1 | 1 | 1 | |
| 33 | 12049248 | MAGNET Ø20 | IMÁN Ø20 | AIMANT Ø20 | 2 | 2 | 2 | X |
| 34 | 12141414 | INLET HOOP | ARO REFUERZO ENTRADA | ANNEAU RENFORT ENTRÉE | 1 | 1 | 1 | |
| 35 | 12145726 | REED SENSOR SUPPORT | SOPORTE SENSOR REED | SUPPORT CAPTEUR REED | 1 | 1 | 1 | |
| 36 | 12090513 | REED RECTANGULAR SENSOR | SENSOR REED RECTANGULAR | CAPTEUR REED RECTANGULAIRE | 2 | 2 | 2 | X |
| 37 | 12146772 | FLUFF FILTER LID HANDLE | TIRADOR TAPA FILTRO BORRA | POIGNÉE COUVERCLE FILTRE PELUCHE | 2 | 2 | 2 | |
| 38 | 12151302 | LOWER FRONT PANNEL **STANDARD** | TAPA FRONTAL INFERIOR **STANDARD** | PANNEAU FRONTAL INFÉRIEUR **STANDARD** | 1 | 1 | 1 | |
| 38 | 12151303 | LOWER FRONT PANNEL **RECIRCULATION** | TAPA FRONTAL INFERIOR **RECIRCULACIÓN** | PANNEAU FRONTAL INFÉRIEUR **RECIRCULATION** | 1 | 1 | 1 | |
| 39 | 12145916 | FLUFF FILTER LID | TAPA FILTRO BORRA | PANNEAU FILTRE PELUCHE | 1 | 1 | 1 | |
| 40 | 12145322 | FLUFF FILTER LID SUPPORT | SOPORTE TAPA FILTRO BORRA | SUPPORT PANNEAU FILTRE PELUCHE | 1 | 1 | 1 | |
| 41 | 12034030 | LEVELLING FEET | PIÉS DE NIVELACIÓN | PIEDS DE NIVELLEMENT | 4 | 4 | 4 | |
| 42 | 12145908 | LEFT LOWER SIDE PANNEL | PANEL LATERAL IZQUIERDO INFERIOR | PANNEAU LATÉRAL GAUCHE INFÉRIEUR | 1 | … | … | |
| 42 | 12145918 | LEFT LOWER SIDE PANNEL | PANEL LATERAL IZQUIERDO INFERIOR | PANNEAU LATÉRAL GAUCHE INFÉRIEUR | … | 1 | … | |
| 42 | 12145925 | LEFT LOWER SIDE PANNEL | PANEL LATERAL IZQUIERDO INFERIOR | PANNEAU LATÉRAL GAUCHE INFÉRIEUR | … | … | 1 | |
| 43 | 12145907 | RIGHT LOWER SIDE PANNEL | PANEL LATERAL DERECHO INFERIOR | PANNEAU LATÉRAL DROIT INFÉRIEUR | 1 | … | … | |
| 43 | 12145917 | RIGHT LOWER SIDE PANNEL | PANEL LATERAL DERECHO INFERIOR | PANNEAU LATÉRAL DROIT INFÉRIEUR | … | 1 | … | |
| 43 | 12145924 | RIGHT LOWER SIDE PANNEL | PANEL LATERAL DERECHO INFERIOR | PANNEAU LATÉRAL DROIT INFÉRIEUR | … | … | 1 | |
| 44 | 12096891 | MAGNET Ø13 | IMÁN Ø13 | AIMANT Ø13 | 1 | 1 | 1 | X |
| 45 | 12145377 | REED SENSOR SUPPORT | SOPORTE SENSOR REED | SUPPORT CAPTEUR REED | 1 | 1 | 1 | |
| 46 | 12145331 | FLUFF FILTER LID HANDLE SUPPORT | SOPORTE TIRADOR TAPA FILTRO BORRA | SUPPORT POIGNÉE COUVERCLE FILTRE PELUCHE | 2 | 2 | 2 | |
| 47 | 12145183 | FRONT WHEEL SUPPORT | SOPORTE DELANTERO RUEDA | SUPPORT DE ROUE AVANT | 2 | 2 | 2 | |
| 48 | 12141416 | WHEEL CAP | CASQUILLO | DOUILLE | 4 | 4 | 4 | |
| 49 | 12141415 | WHEEL SHAFT | EJE RUEDA | AXE DE LA ROUE | 2 | 2 | 2 | |
| 50 | 12097614 | WHEEL Ø80 | RUEDA Ø80 | ROUE Ø80 | 2 | 2 | 2 | X |
| 51 | 12145182 | REAR WHEEL SUPPORT | SOPORTE TRASERO RUEDA | SUPPORT DE ROUE ARRIÈRE | 2 | 2 | 2 | |
| 52 | 12033434 | LOCK WITH KEY | CIERRE CON LLAVE | SERRURE AVEC CLÉ | 1 | 1 | 1 | X |
| 53 | 12146824 | ELECTRIC BOARD DOOR | PUERTA CUADRO ELECTRICO | PORTE DU PANNEAU ÉLECTRIQUE | 1 | 1 | 1 | |

# AIR RECIRCULATION
# RECIRCULACION DE AIRE
# RECIRCULATION D'AIR

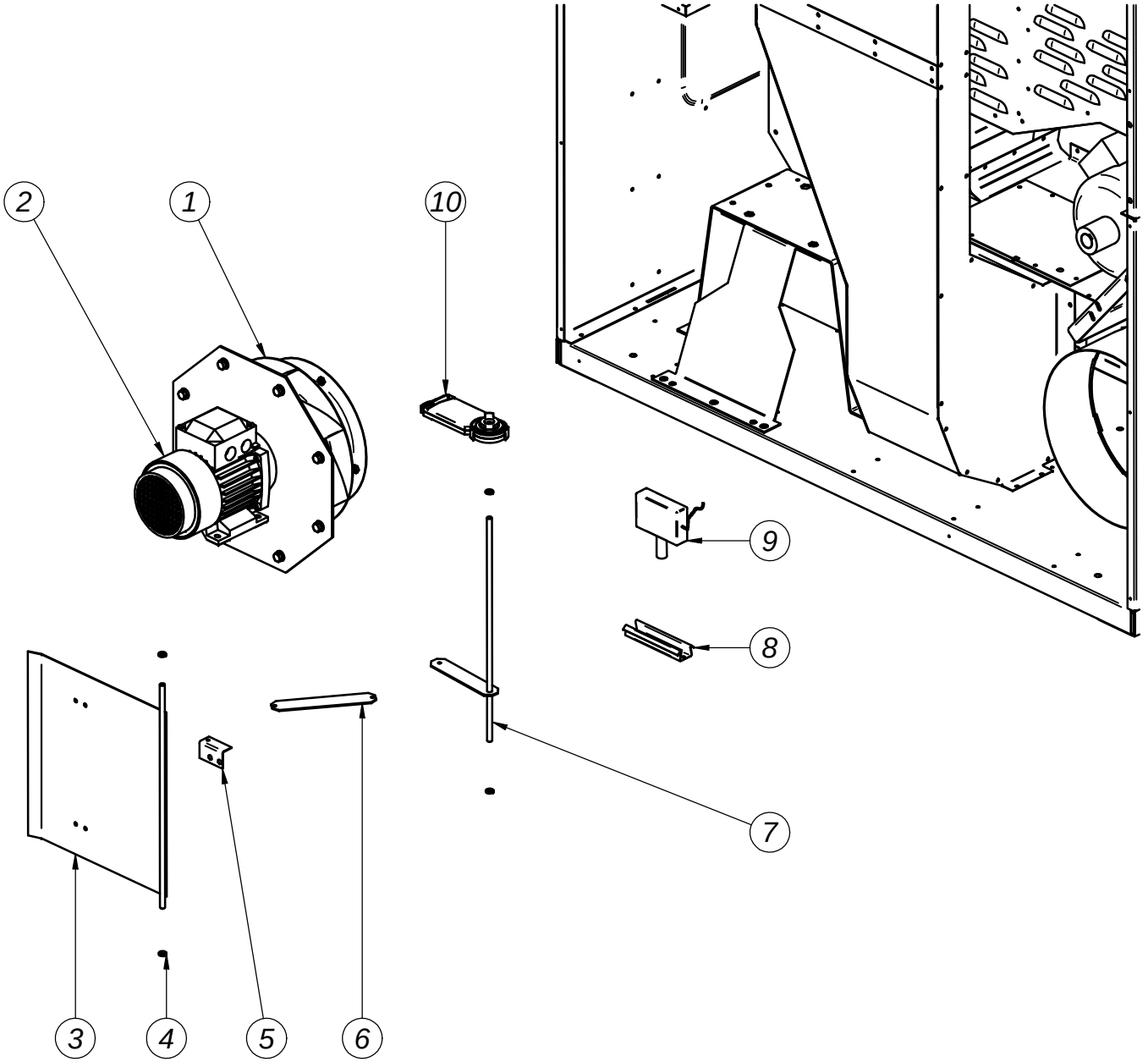

FAGOR

## AIR RECIRCULATION
## RECIRCULACIÓN DE AIRE
## RECIRCULATION D'AIR

| POS. | REF. | DESCRIPTION | DESCRIPCIÓN | DESCRIPTION | SR-45 | SR-60 | SR-80 | RECOM. |
|---|---|---|---|---|---|---|---|---|
| 1 | 12149175 | FAN | TURBINA | TURBINE | 1 | 1 | 1 | X |
| 2 | 12149177 | MOTOR 2.2Kw 50Hz 3PH | MOTOR 2.2Kw 50Hz 3F | MOTEUR 2.2Kw 50Hz 3PH | 1 | 1 | 1 | X |
| 2 | 12149234 | MOTOR 2.2Kw 60Hz 3PH | MOTOR 2.2Kw 60Hz 3F | MOTEUR 2.2Kw 60Hz 3PH | 1 | 1 | 1 | X |
| 3 | 12146081 | DAMPER ASSEMBLY | CONJUNTO COMPUERTA | ASSEMBLAGE DE LA GRILLE | 1 | 1 | 1 | |
| 4 | 12146782 | CAP Ø8 x Ø10 | CASQUILLO Ø8 x Ø10 | DOUILLE Ø8 x Ø10 | 4 | 4 | 4 | |
| 5 | 12145412 | ANGLE BINDING OF DAMPER | ANGULO UNION COMPUERTA | ANGLE FIXATION DE LA GRILLE | 1 | 1 | 1 | |
| 6 | 12145415 | BINDING ARM | BIELA | BIELLE | 1 | 1 | 1 | |
| 7 | 12146080 | CONNECTING ROD ASSEMBLY | CONJUNTO BIELA | ASSEMBLAGE DE LA BIELLE | 1 | 1 | 1 | |
| 8 | 12145707 | HUMIDITY SENSOR SUPPORT | SOPORTE SENSOR DE HUMEDAD | SUPPORT SONDE D'HUMIDITÉ | 1 | 1 | 1 | |
| 9 | 12119884 | HUMIDITY SENSOR | SENSOR DE HUMEDAD | SONDE D'HUMIDITÉ | 1 | 1 | 1 | X |
| 10 | 12149174 | ROTARY ACTUATOR | ACTUADOR ROTATIVO | ACTIONNEUR ROTATIF | 1 | 1 | 1 | X |

# DOOR
# PUERTA
# PORTE

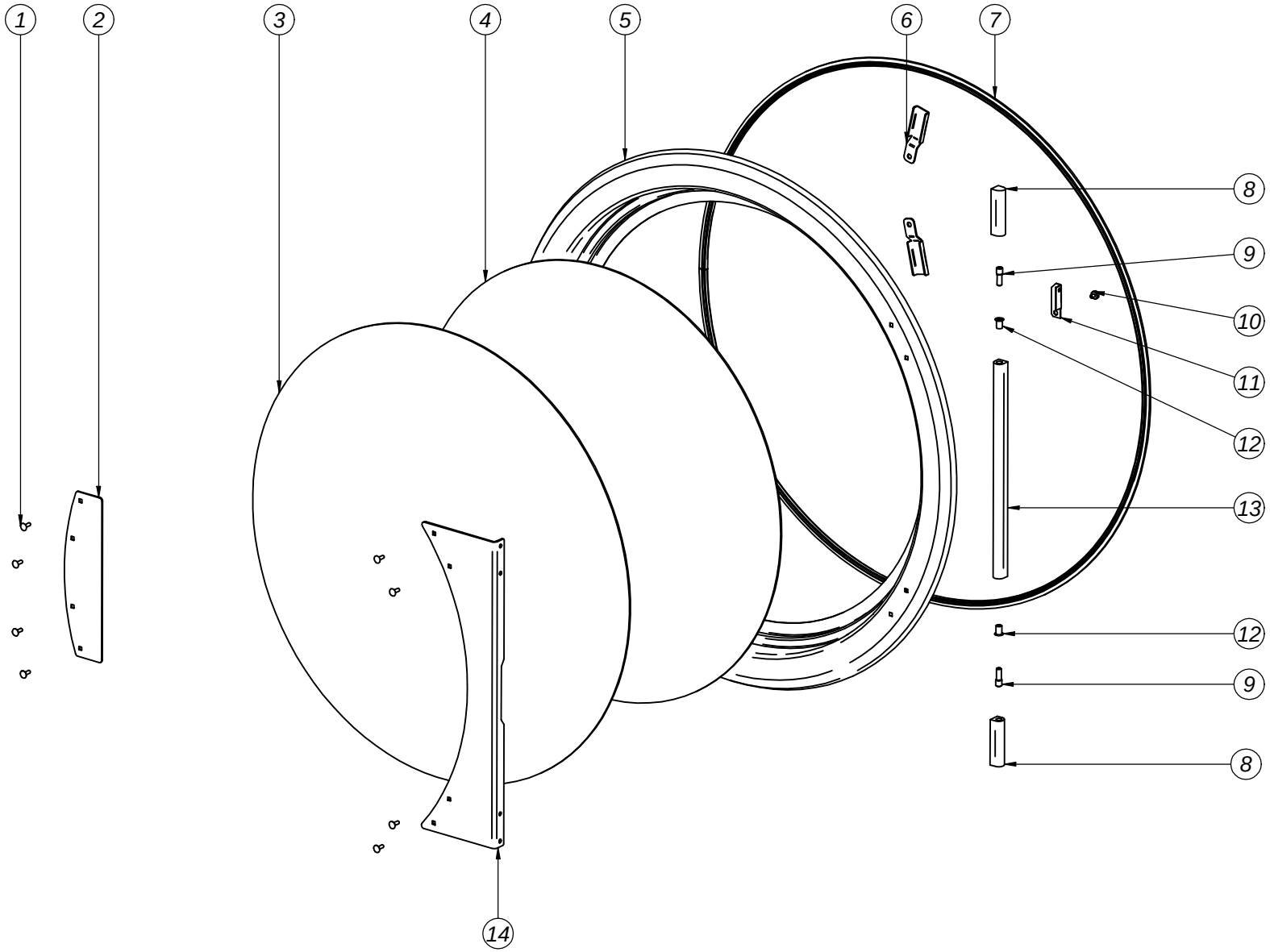

FAGOR

## DOOR
## PUERTA
## PORTE

| POS. | REF. | DESCRIPTION | DESCRIPCIÓN | DESCRIPTION | SR-28 | SR-35 | SR-45 | SR-60 | SR-80 | RECOM. |
|---|---|---|---|---|---|---|---|---|---|---|
| | **12131304** | **SINGLE GLASS DOOR SET** | **CONJUNTO PUERTA CRISTAL SIMPLE** | **ENSEMBLE PORTE EN VERRE SIMPLE** | **1** | **1** | **1** | **1** | **1** | |
| | **12146743** | **DOUBLE GLASS DOOR SET** | **CONJUNTO PUERTA CRISTAL DOBLE** | **ENSEMBLE PORTE EN VERRE DOUBLE** | **1** | **1** | **1** | **1** | **1** | |
| 1 | 12149295 | HANDLE SCREW | TORNILLO TIRADOR | VIS POIGNÉE | 8 | 8 | 8 | 8 | 8 | |
| 2 | 12145106 | HANDLE | TIRADOR | POIGNÉE | 1 | 1 | 1 | 1 | 1 | |
| 3 | 12145966 | INSULATION GLASS (OPTIONAL) | CRISTAL AISLAMIENTO (OPCIONAL) | VERRE ISOLATION (OPTIONNEL) | 1 | 1 | 1 | 1 | 1 | |
| 4 | 12145965 | PRINCIPAL GLASS | CRISTAL PRINCIPAL | VERRE PRINCIPAL | 1 | 1 | 1 | 1 | 1 | |
| 5 | 12145096 | DOOR FRAME | MARCO PUERTA | CADRE PORTE | 1 | 1 | 1 | 1 | 1 | |
| 6 | 12141418 | DOOR SUBJECTION | SUJECIÓN PUERTA | FIXAGE PORTE | 2 | 2 | 2 | 2 | 2 | |
| 7 | 12145964 | RUBBER PROFILE | PERFIL DE GOMA | PROFIL EN CAOUTCHOUC | 2,95m | 2,95m | 2,95m | 2,95m | 2,95m | X |
| 8 | 12132641 | MOBILE HINGE | BISAGRA MÓVIL | CHARNIÈRE MOBILE | 2 | 2 | 2 | 2 | 2 | |
| 9 | 12133971 | HINGE PIN | PASADOR BISAGRA | PIVOTE CHARNIÈRE | 2 | 2 | 2 | 2 | 2 | |
| 10 | 12049248 | MAGNET Ø20 | IMÁN Ø20 | AIMANT Ø20 | 2 | 2 | 2 | 2 | 2 | |
| 11 | 12126502 | MAGNET HOLDER ANGLE | ÁNGULO SOPORTE IMÁN | ANGLE SUPPORT AIMANT | 2 | 2 | 2 | 2 | 2 | |
| 12 | 12133908 | CAP Ø10,8x15 | CASQUILLO Ø10,8x15 | DOUILLE Ø10,8x15 | 2 | 2 | 2 | 2 | 2 | |
| 13 | 12146785 | FIXED HINGE | BISAGRA FIJA | CHARNIÈRE FIXE | 1 | 1 | 1 | 1 | 1 | |
| 14 | 12146775 | HINGE SUPPORT | SOPORTE BISAGRA | SUPPORT CHARNIÈRE | 1 | 1 | 1 | 1 | 1 | |

FAGOR

# FILTER
# FILTRO
# FILTRE

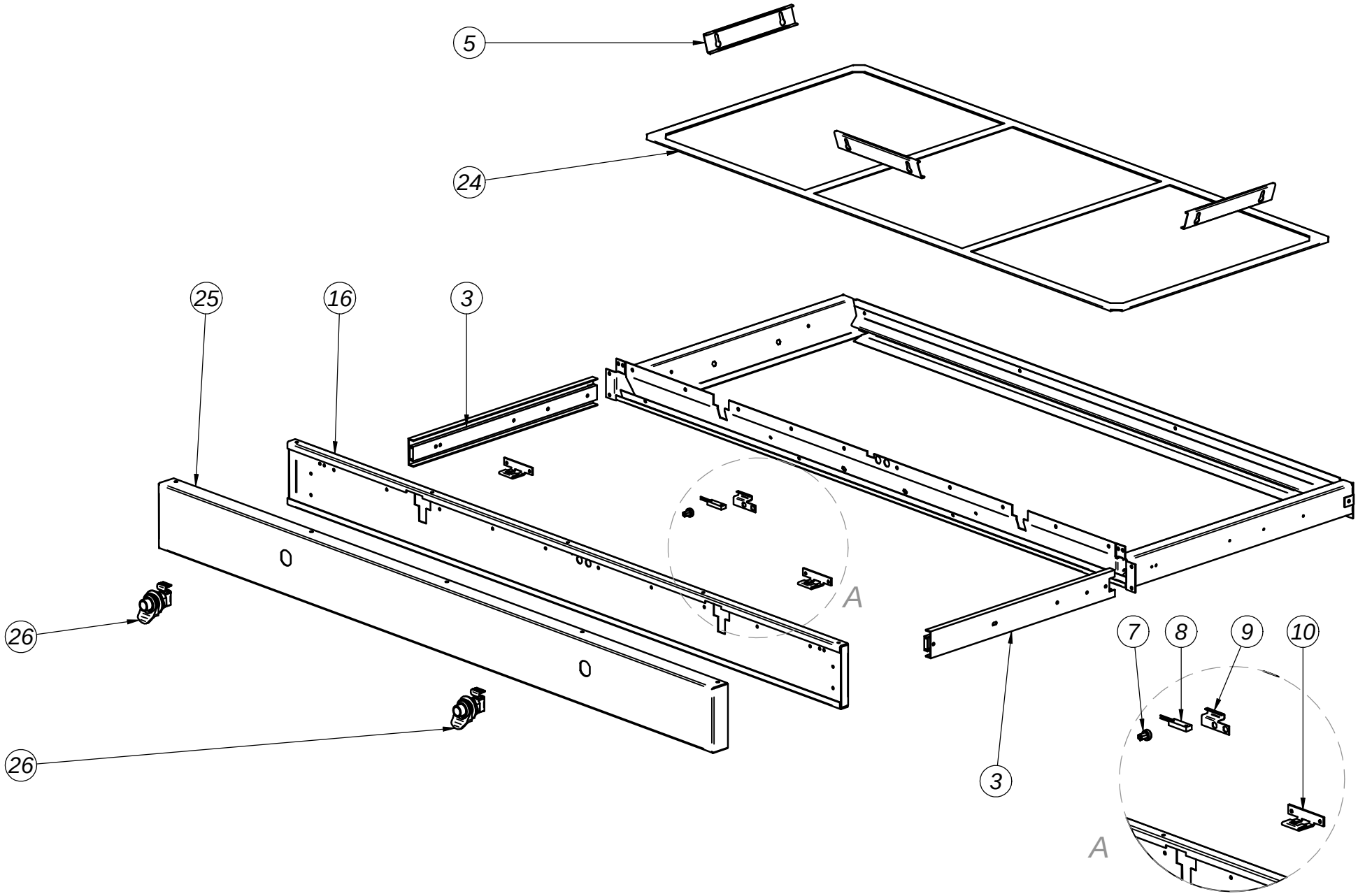

FAGOR

## FILTER
## FILTRO
## FILTRE

| POS. | REF. | DESCRIPTION | DESCRIPCIÓN | DESCRIPTION | SR-45 | SR-60 | SR-80 | RECOM. |
|---|---|---|---|---|---|---|---|---|
| 1 | 12145916 | FLUFF FILTER LID | TAPA FILTRO BORRA | PANNEAU FILTRE PELUCHE | 1 | 1 | 1 | |
| 2 | 12145322 | FLUFF FILTER LID SUPPORT | SOPORTE TAPA FILTRO BORRA | SUPORT PANNEAU FILTRE PELUCHE | 1 | 1 | 1 | |
| 3 | 12146789 | TELESCOPIC GUIDE | GUIA TELESCOPICA | GUIDE TÉLESCOPIQUE | 2 | 2 | 2 | X |
| 4 | 12146078 | FILTER | FILTRO | FILTRE | 1 | 1 | 1 | X |
| 5 | 12145554 | FIXING FILTER | FIJACION DEL FILTRO | FIXATION FILTRE | 3 | 3 | 3 | |
| 6 | 12146772 | FLUFF FILTER LID HANDLE | TIRADOR TAPA FILTRO BORRA | POIGNÉE COUVERCLE FILTRE PELUCHE | 2 | 2 | 2 | X |
| 6 | 12138207 | FLUFF FILTER LID HANDLE (SELF SERVICE) | TIRADOR TAPA FILTRO BORRA (AUTOSERVICIO) | POIGNÉE COUVERCLE FILTRE PELUCHE (SELF SERVICE) | 1 | 1 | 1 | X |
| 7 | 12096891 | MAGNET Ø13 | IMÁN Ø13 | AIMANT Ø13 | 1 | 1 | 1 | X |
| 8 | 12090513 | REED RECTANGULAR SENSOR | SENSOR REED RECTANGULAR | CAPTEUR REED RECTANGULAIRE | 1 | 1 | 1 | X |
| 9 | 12145377 | REED SENSOR SUPPORT | SOPORTE SENSOR REED | SUPORT CAPTEUR REED | 1 | 1 | 1 | |
| 10 | 12145331 | FIXING LID HANDLE | FIJADOR DEL TIRADOR | FIXATION POIGNÉE | 2 | 2 | 2 | |

# DRUM
# TAMBOR
# TAMBOUR

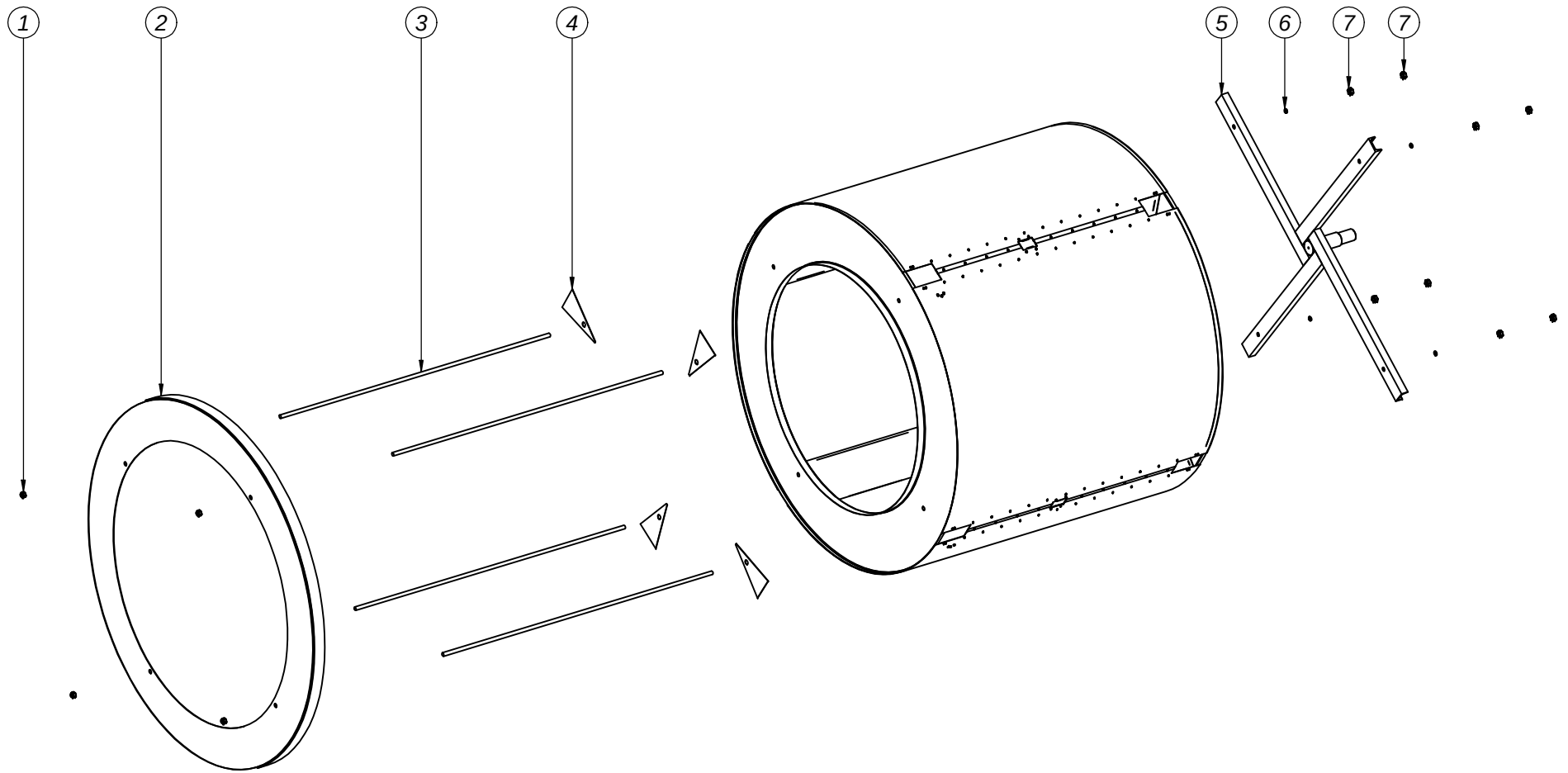

FAGOR

# DRUM
# TAMBOR
# TAMBOUR

| POS. | REF. | DESCRIPTION | DESCRIPCIÓN | DESCRIPTION | SR-45 | SR-60 | SR-80 | RECOM. |
|---|---|---|---|---|---|---|---|---|
| 1 | 12149296 | LOCKING NUT M12 | TUERCA AUTOBLOCANTE M12 | ÉCROU AUTOBLOQUANT M12 | 4 | 4 | 4 | |
| 2 | 12145122 | DRUM REINFORCEMENT RING | ARO REFUERZO TAMBOR | ANNEAU RENFORT TAMBOUR | 1 | 1 | 1 | |
| 3 | 12145121 | DRUM TIGHTENER M12 | TIRANTES TAMBOR M12 | TIGE FILETÉE DU TAMBOUR M12 | 4 | ··· | ··· | |
| 3 | 12145130 | DRUM TIGHTENER M12 | TIRANTES TAMBOR M12 | TIGE FILETÉE DU TAMBOUR M12 | ··· | 4 | ··· | |
| 3 | 12145131 | DRUM TIGHTENER M12 | TIRANTES TAMBOR M12 | TIGE FILETÉE DU TAMBOUR M12 | ··· | ··· | 4 | |
| 4 | 12145376 | DRUM REINFORCEMENT | REFUERZO TAMBOR | RENFORT TAMBOUR | 4 | 4 | 4 | |
| 5 | 12145123 | AXEL-RADIUM SET | CONJUNTO EJE-RADIOS TAMBOR | ENSEMBLE AXE-RAYONS TAMBOUR | 1 | 1 | 1 | |
| 6 | 12149246 | GROWER RING M12 | ARANDELA GROWER M12 | RONDELLE GROWER M12 | 4 | 4 | 4 | |
| 7 | 12149259 | M12 NUT | TUERCA M12 | ÉCROU M12 | 8 | 8 | 8 | |

# DRIVE / TRANSMISION / TRANSMISSION

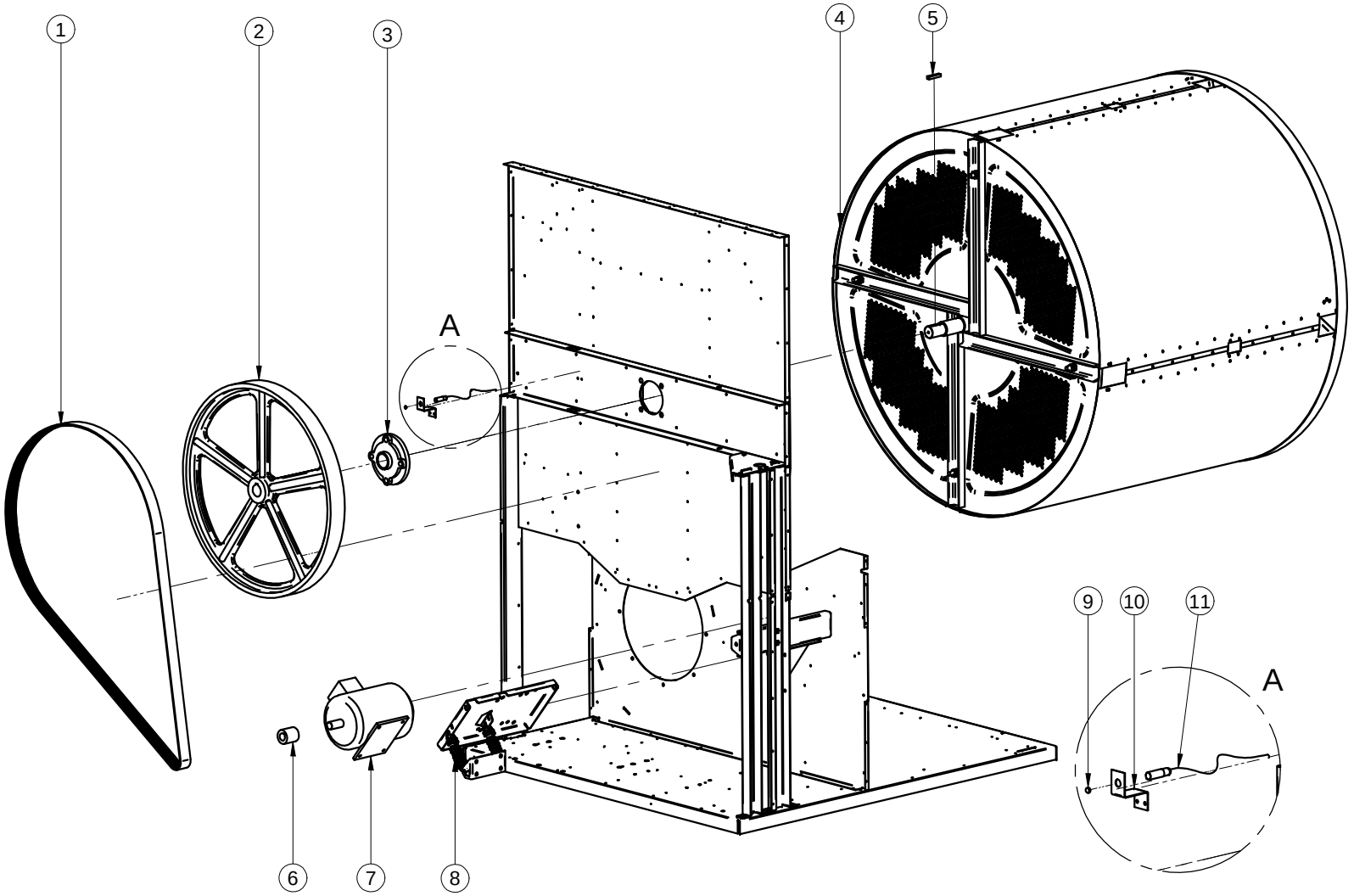

FAGOR

## DRIVE
## TRANSMISIÓN
## TRANSMISSION

| POS. | REF. | DESCRIPTION | DESCRIPCIÓN | DESCRIPTION | SR-45 | SR-60 | SR-80 | RECOM. |
|---|---|---|---|---|---|---|---|---|
| 1 | 12028089 | BELT POLY V 12 PK 2830 | CORREA POLY V 12 PK 2830 | COURROIE POLY V 12 PK 2830 | 1 | 1 | 1 | X |
| 2 | 12026048 | FLAT PULLEY Ø675x60 | POLEA PLANA Ø675x60 | POULIE PLATE Ø675x60 | 1 | 1 | 1 | |
| 3 | 12032721 | BEARING UCFC 209 | RODAMIENTO UCFC 209 | ROULEMENT UCFC 209 | 1 | 1 | 1 | X |
| 4 | 12146769 | DRUM SET J-900 | CONJUNTO TAMBOR J-900 | ENSEMBLE TAMBOUR J-900 | 1 | - | - | X |
| 4 | 12146770 | DRUM SET J-1200 | CONJUNTO TAMBOR J-1200 | ENSEMBLE TAMBOUR J-1200 | - | 1 | - | X |
| 4 | 12146771 | DRUM SET J-1500 | CONJUNTO TAMBOR J-1500 | ENSEMBLE TAMBOUR J-1500 | - | - | 1 | X |
| 5 | 12037040 | KEY 10X8X50 | CHAVETA 10X8X50 | CLAVETTE 10X8X50 | 1 | 1 | 1 | X |
| 6 | 12030208 | PULLEY PK 12 Ø45 Ø24 | POLEA PK 12 Ø45 Ø24 | POULIE PK 12 Ø45 Ø24 | 1 | 1 | - | |
| 6 | 12146036 | PULLEY PK 12 Ø45 Ø28 | POLEA PK 12 Ø45 Ø28 | POULIE PK 12 Ø45 Ø28 | - | - | 1 | |
| 7 | 12110110 | MOTOR 0,75 KW 1000rpm | MOTOR 0,75 KW 1000rpm | MOTEUR 0,75 KW 1000rpm | 1 | - | - | X |
| 7 | 12110111 | MOTOR 1,1 KW 1000rpm | MOTOR 1,1 KW 1000rpm | MOTEUR 1,1 KW 1000rpm | - | 1 | - | X |
| 7 | 12110112 | MOTOR 1,5 KW 1000rpm | MOTOR 1,5 KW 1000rpm | MOTEUR 1,5 KW 1000rpm | - | - | 1 | X |
| 8 | 12146041 | TENSION SPRING | MUELLE TENSOR | RESSORT DE TENSION | 2 | 2 | 2 | |
| 9 | 12032827 | REED DETECTOR M12x1 | DETECTOR REED M12x1 | DETECTEUR REED M12x1 | 1 | 1 | 1 | X |
| 10 | 12145114 | REED DETECTOR SUPPORT | SOPORTE DETECTOR REED | SUPPORT DETECTEUR REED | 1 | 1 | 1 | |
| 11 | 12043754 | MAGNET Ø8x3 | IMÁN Ø8x3 | AIMANT Ø8x3 | 1 | 1 | 1 | X |

# ELECTRICAL HEATING / CALEFACCIÓN ELÉCTRICA / CHAUFFAGE ÉLECTRIQUE

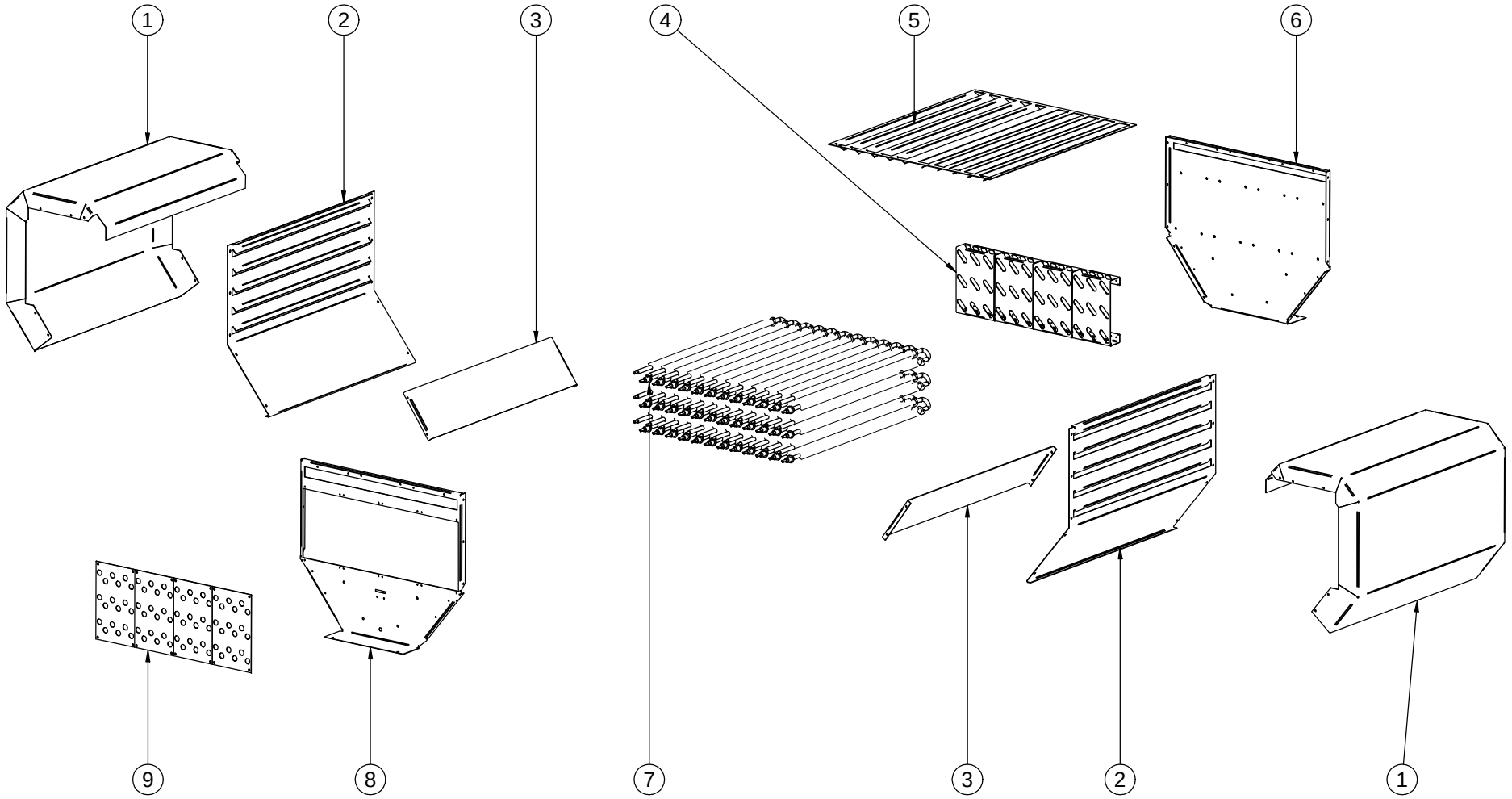

FAGOR

## ELECTRICAL HEATING
## CALEFACCIÓN ELÉCTRICA
## CHAUFFAGE ÉLECTRIQUE

| POS. | REF. | DESCRIPTION | DESCRIPCIÓN | DESCRIPTION | SR-45 | SR-60 | SR-80 | RECOM. |
|---|---|---|---|---|---|---|---|---|
| 1 | 12145384 | COVERING | RECUBRIMIENTO | REVÊTEMENT | 2 | - | - | |
| 1 | 12145460 | COVERING | RECUBRIMIENTO | REVÊTEMENT | - | 2 | 2 | |
| 2 | 12145381 | ELECTRIC BATTERY SIDE COVER | TAPA LATERAL | PANEAU LATÉRAL | 2 | - | - | |
| 2 | 12145457 | ELECTRIC BATTERY SIDE COVER | TAPA LATERAL | PANEAU LATÉRAL | - | 2 | 2 | |
| 3 | 12145459 | DIVERTER | DEFLECTOR | DÉVIATEUR | - | 2 | 2 | |
| 4 | 12145382 | RESISTOR REAR SUPPORT | SOPORTE POSTERIOR RESISTENCIAS | SUPPORT POSTERIUR RÉSISTANCES | 3 | 4 | 4 | |
| 5 | 12145383 | ELECTRIC BATTERY UPPER COVER | TAPA SUPERIOR | PANEAU SUPERIEUR | 1 | - | - | |
| 5 | 12145458 | ELECTRIC BATTERY UPPER COVER | TAPA SUPERIOR | PANEAU SUPERIEUR | - | 1 | 1 | |
| 6 | 12145379 | ELECTRIC BATTERY BACK COVER | TAPA POSTERIOR | COUVERTURE D'ARRIERE | 1 | - | - | |
| 6 | 12145456 | ELECTRIC BATTERY BACK COVER | TAPA POSTERIOR | COUVERTURE D'ARRIERE | - | 1 | 1 | |
| 7 | 12032899 | RESISTOR 2000 W | RESISTENCIA 2000 W | RÉSISTANCE 2000 W | 27 | 36 | 36 | X |
| 8 | 12145378 | ELECTRIC BATTERY FRONT COVER | TAPA FRONTAL | COUVERTURE DU FRONT | 1 | - | - | |
| 8 | 12145455 | ELECTRIC BATTERY FRONT COVER | TAPA FRONTAL | COUVERTURE DU FRONT | - | 1 | 1 | |
| 9 | 12145380 | RESISTOR FRONT SUPPORT | SOPORTE DELANTERO RESISTENCIAS | SUPPORT FRONTAL RÉSISTANCES | 3 | 4 | 4 | |

# GAS HEATING / CALEFACCIÓN GAS / CHAUFFAGE GAZ

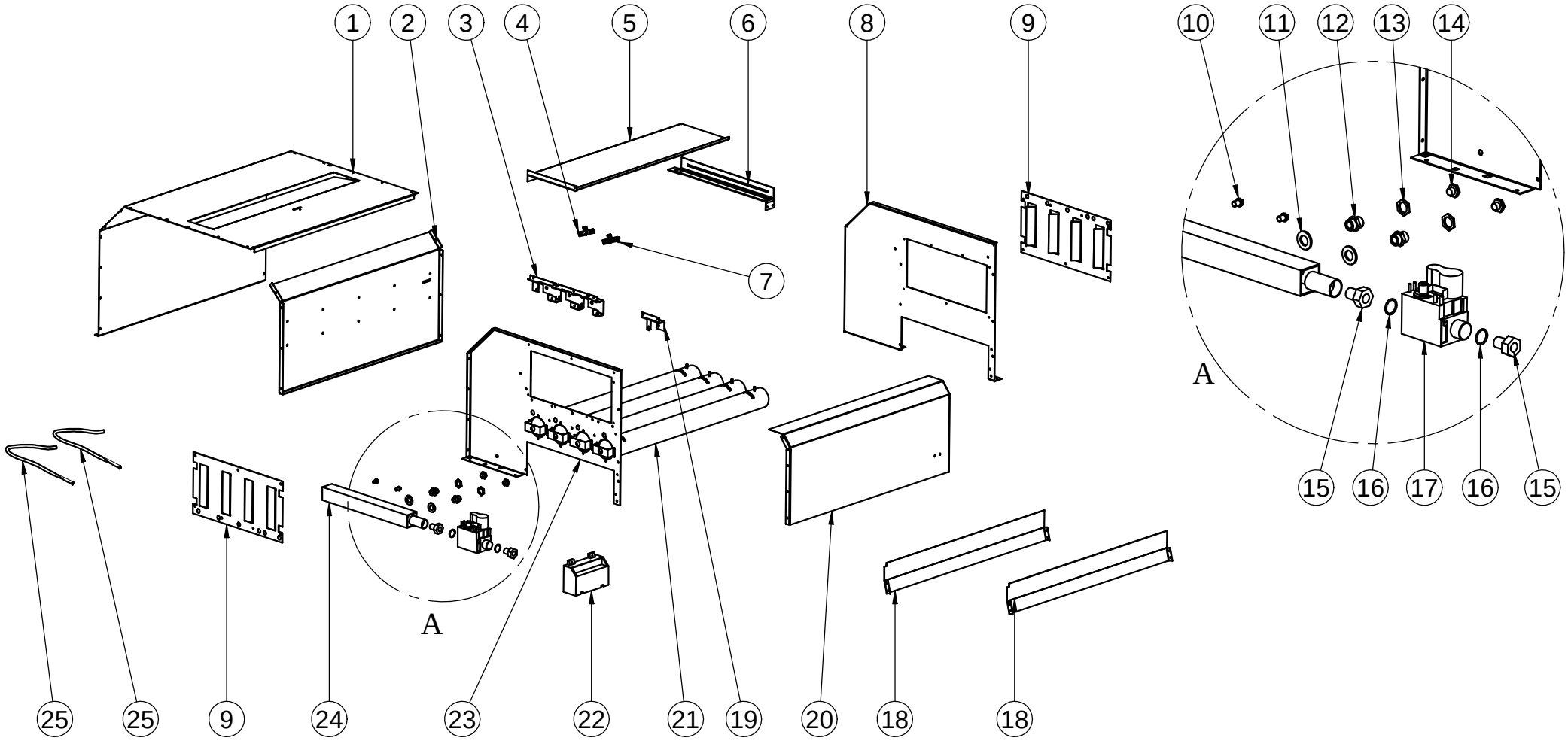

FAGOR

## GAS HEATING
## CALEFACCIÓN GAS
## CHAUFFAGE GAZ

| POS. | REF. | DESCRIPTION | DESCRIPCIÓN | DESCRIPTION | SR-45 | SR-60 | SR-80 | RECOM. |
|---|---|---|---|---|---|---|---|---|
| 1 | 12145387 | RIGHT PANEL | LATERAL DERECHO | PANNEAU DROIT | 1 | 1 | 1 | |
| 2 | 12145390 | MID PANEL | PANEL CENTRAL | PANNEAU CENTRAL | 1 | 1 | 1 | |
| 3 | 12150301 | DETECTION ELECTRODE SUPPORT | SOPORTE ELECTRODO DETECCION | SUPPORT ÉLECTRODE DETECTION | 1 | 1 | 1 | |
| 4 | 12150514 | DETECTION ELECTRODE | ELECTRODO DETECCIÓN | ÉLECTRODE DÉTECTION | 1 | 1 | 1 | X |
| 5 | 12146835 | DIVERTER | DEFLECTOR | DÉVIATEUR | 1 | 1 | … | |
| 6 | 12145125 | GAS BURNER SUPPORT | SOPORTE QUEMADORES | SUPPORT DES BRÛLEURS | 1 | 1 | 1 | |
| 7 | 12150513 | IGNITION ELECTRODE | ELECTRODO IGNICIÓN | ÉLECTRODE ALLUMAGE | 1 | 1 | 1 | X |
| 8 | 12145386 | FRONT PANEL | PARED ANTERIOR | PAROI FRONTAL | 1 | 1 | 1 | |
| 9 | 12145126 | BATTERY VENTILATION WINDOW | VENTANA VENTILACIÓN BATERIA | VOLET VENTILATION | 2 | 2 | 2 | |
| 10 | 12146050 | GALVANIZED CAP 3/8″ | TAPÓN 3/8″ GALVA. | BOUCHON 3/8" GALVA. | 2 | 1 | … | |
| 11 | 12149238 | ALUMINIUM WASHER | ARANDELA ALUMINIO | ALUMINIUM RONDELLE | 2 | 3 | 4 | |
| 12 | 12036106 | INJECTOR HOLDER | PORTA INYECTOR | PORTE INJECTEUR | 2 | 3 | 4 | |
| 13 | 12037250 | GALVANIZED NUT 3/8" | TUERCA 3/8" GALVA. | ÉCROU 3/8" GALVA. | 2 | 3 | 4 | |
| 14 | 12036863 | INJECTOR 2,8mm (GLP) | INYECTOR 2,8mm (GAS PROPANO) | INJECTEUR 2,8mm (GAZ PROPANE) | 2 | 3 | 4 | X |
| 14 | 12036864 | INJECTOR 5,1mm (NATURAL GAS) | INYECTOR 5,1mm (GAS NATURAL) | INJECTEUR 5,1mm (GAZ NATUREL) | 2 | 3 | 4 | X |
| 15 | 12034704 | ELECTROVALVE COUPLING 3/4″ | RACOR ELECTROVALVULA 3/4″ | RACCORD ÉLECTROVANNE 3/4" | 2 | 2 | - | |
| 15 | 12146832 | ELECTROVALVE COUPLING 3/4″ | RACOR ELECTROVALVULA 3/4″ | RACCORD ÉLECTROVANNE 3/4" | - | - | 2 | |
| 16 | 12146820 | O-RING | JUNTA TORICA | JOINT D'ÉTANCHÉITÉ | 2 | 2 | 2 | |
| 17 | 12026540 | GAS ELECTROVALVE 50Hz 3/4″ S-900-1200 | GAS ELECTROVALVULA 50Hz 3/4″ S-900-1200 | ÉLECTROVANNE GAZ 50Hz 3/4" S-900-1200 | 1 | 1 | - | X |
| 17 | 12149231 | GAS ELECTROVALVE 60Hz 3/4″ S-900-1200 | GAS ELECTROVALVULA 60Hz 3/4″ S-900-1200 | ÉLECTROVANNE GAZ 60Hz 3/4" S-900-1200 | 1 | 1 | - | X |
| 17 | 12025997 | GAS ELECTROVALVE 50/60Hz S-1500 | GAS ELECTROVALVULA 50/60Hz S-1500 | ÉLECTROVANNE GAZ 50/60Hz S-1500 | - | - | 1 | X |
| 18 | 12145127 | INLET AIR HATCH | REGISTO ENTRADA AIRE | REGISTRE ENTRÉE D'AIR | 2 | 2 | 2 | |
| 19 | 12150300 | IGNITION ELECTRODE SUPPORT | SOPORTE ELECTRODO IGNICION | SUPPORT ÉLECTRODE IGNITION | 1 | 1 | 1 | |
| 20 | 12145128 | LEFT PANEL | LATERAL IZQUIERDO | PANNEAU GAUCHE | 1 | 1 | 1 | |
| 21 | 12028640 | GAS BURNER | QUEMADOR GAS | BRÛLEUR GAZ | 2 | 3 | 4 | X |
| 22 | 12136507 | IONITZATION CIRCUIT 50/60Hz S-900/1200-1500 | CIRCUITO IONIZACIÓN 50/60Hz S-900/1200-1500 | CIRCUIT IONISATION 50/60Hz S-900/1200-1500 | 1 | 1 | 1 | X |
| 23 | 12145388 | BACK PANEL | PARED POSTERIOR | PAROI POSTERIEUR | 1 | 1 | 1 | |
| 24 | 12150678 | GAS COLLECTOR | COLECTOR DE GAS | COLLECTEUR DE GAZ | 1 | 1 | 1 | |
| 25 | 12037939 | ELECTRODE CABLE | CABLE PARA LA BUJÍA | CABLE POUR LA BOUGIE | 1,1M | 1,1M | 1,1M | |

# STEAM HEATING / CALEFACCION VAPOR / CHAUFFAGE VAPEUR

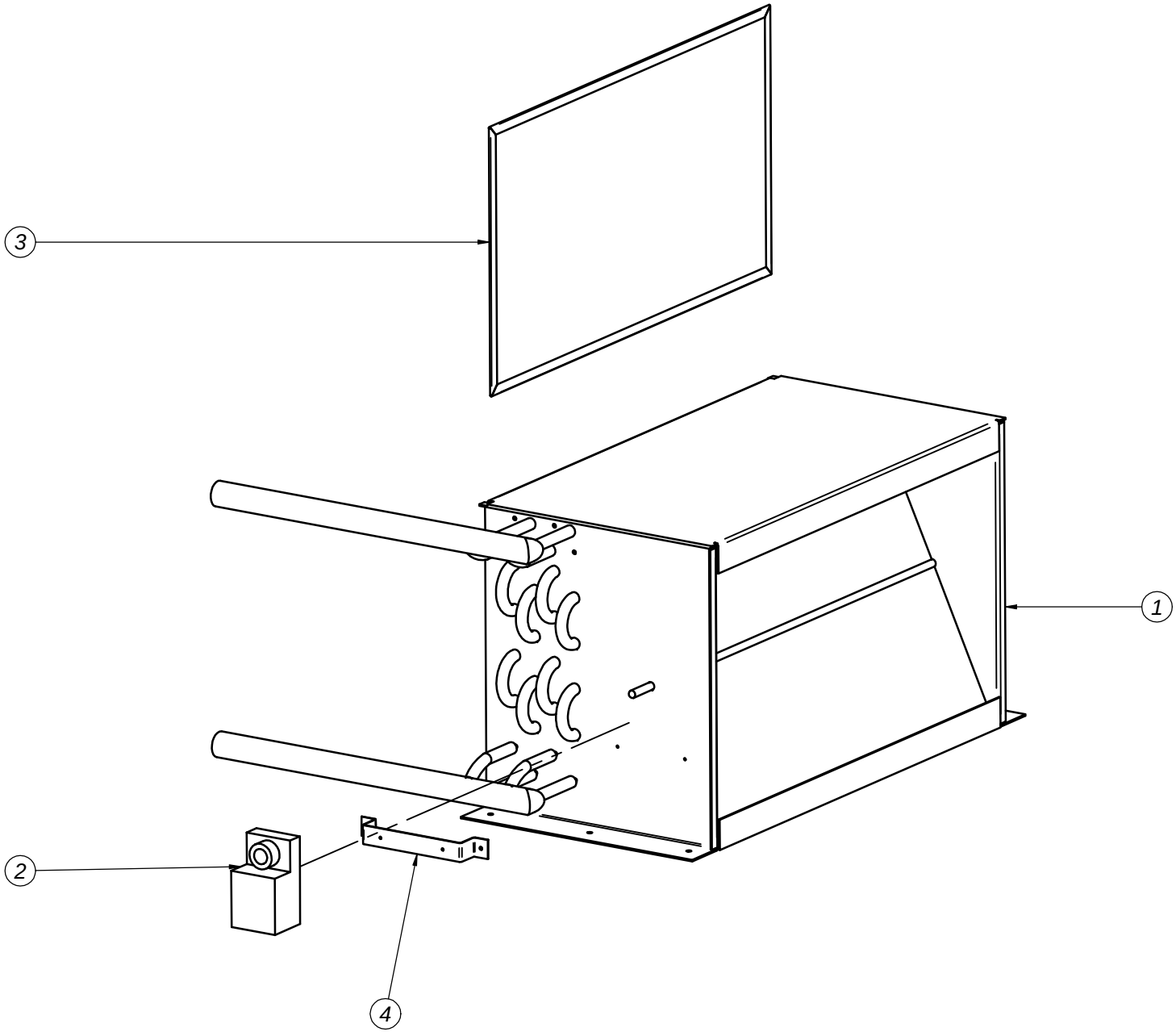

FAGOR

## STEAM HEATING
## CALEFACCIÓN VAPOR
## CHAUFFAGE VAPEUR

| POS. | REF. | DESCRIPTION | DESCRIPCIÓN | DESCRIPTION | SR-45 | SR-60 | SR-80 | RECOM. |
|---|---|---|---|---|---|---|---|---|
| 1 | 12146074 | STEAM BATTERY SET (STANDARD) J-900 | CONJUNTO BATERÍA VAPOR (STANDARD) J-900 | ENSEMBLE BATTERIE VAPEUR (STANDARD) J-900 | 1 | - | - | X |
| 1 | 12148716 | STEAM BATTERY SET (LOW PRESSURE) J-900 | CONJUNTO BATERÍA VAPOR (BAJA PRESIÓN) J-900 | ENSEMBLE BATTERIE VAPEUR (BASSE PRESSION) J-900 | 1 | - | - | X |
| 1 | 12148274 | STEAM BATTERY SET (THERMAL OIL) J-900 | CONJUNTO BATERÍA VAPOR (ACEITE TÉRMICO) J-900 | ENSEMBLE BATTERIE VAPEUR (HUILE THERMIQUE) J-900 | 1 | - | - | X |
| 1 | 12146075 | STEAM BATTERY SET (STANDARD) J-1200/1500 | CONJUNTO BATERÍA VAPOR (STANDARD) J-1200/1500 | ENSEMBLE BATTERIE VAPEUR (STANDARD) J-1200/1500 | - | 1 | 1 | X |
| 1 | 12146996 | STEAM BATTERY SET (LOW PRESSURE) J-1200/1500 | CONJUNTO BATERÍA VAPOR (BAJA PRESIÓN) J-1200/1500 | ENSEMBLE BATTERIE VAPEUR (BASSE PRESSION) J-1200/1500 | - | 1 | 1 | X |
| 1 | 12148275 | STEAM BATTERY SET (THERMAL OIL) J-1200/1500 | CONJUNTO BATERÍA VAPOR (ACEITE TÉRMICO) J-1200/1500 | ENSEMBLE BATTERIE VAPEUR (HUILE THERMIQUE) J-1200/1500 | - | 1 | 1 | X |
| 2 | 12137221 | ROTARY MOTOR | ACTUADOR ROTATIVO | ACTIONNEUR ROTATIF | 1 | 1 | 1 | X |
| 3 | 12146079 | FILTER | FILTRO | FILTRE | 1 | - | - | X |
| 3 | 12146082 | FILTER | FILTRO | FILTRE | - | 1 | 1 | X |
| 4 | 12145394 | ROTARY MOTOR SUPPORT | OMEGA SOPORTE ACTUADOR ROTATIVO | SUPPORT ACTIONNEUR ROTATIF | 1 | 1 | 1 | |

## *DIGITAL ELECTRIC BOX / CUADRO ELÉCTRICO DIGITAL / TABLEAU ELECTRIQUE DIGITAL*
## ELECTRICAL HEATING / CALEFACCIÓN ELÉCTRICA / CHAUFFAGE ELECTRIQUE

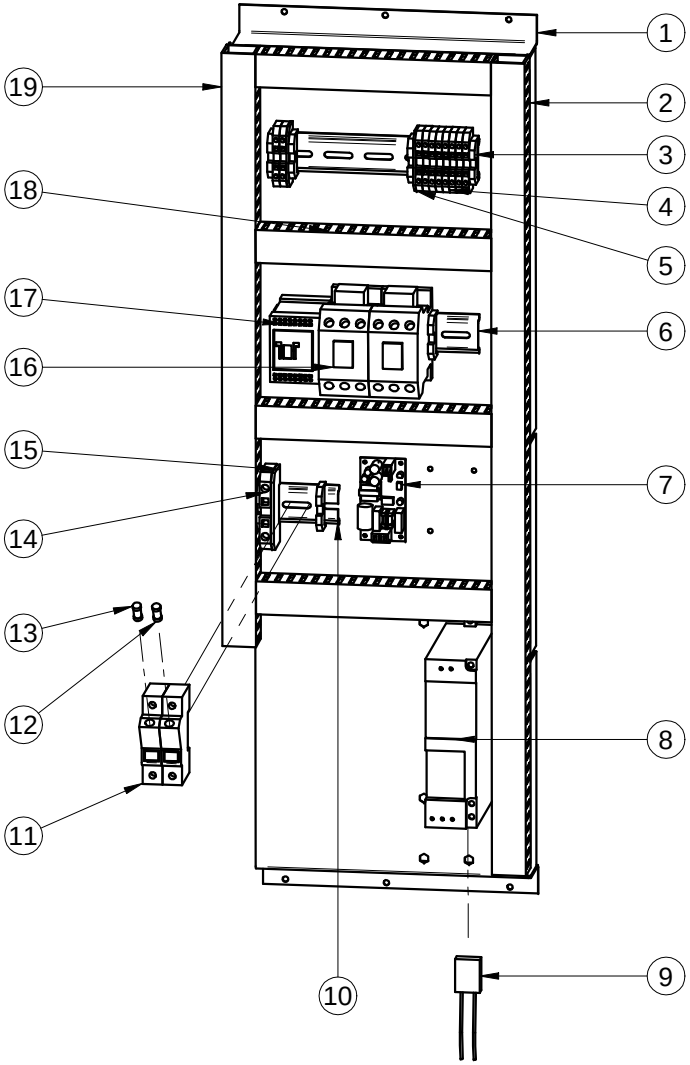

FAGOR

## DIGITAL ELECTRIC BOX - ELECTRICAL HEATING
## CUADRO ELÉCTRICO DIGITAL - CALEFACCIÓN ELÉCTRICA
## TABLEAU ELECTRIQUE DIGITAL - CHAUFFAGE ELECTRIQUE

| POS. | REF. | DESCRIPTION | DESCRIPCIÓN | DESCRIPTION | SR-45 | SR-60 | SR-80 | RECOM. |
|---|---|---|---|---|---|---|---|---|
| 1 | 12145332 | ELECTRIC BOX SUPPORT | SOPORTE CUADRO ELÉCTRICO | SUPPORT DU TABLEAU ÉLECTRIQUE | 1 | 1 | 1 | |
| 2 | 12149072 | WIRE CHANNEL 40x30 (740mm) | CANAL PASAHILOS 40x30 (740mm) | CANAL DE CÂBLE 40x30 (740mm) | 1 | 1 | 1 | |
| 3 | 12037188 | END STOP | TOPE FINAL | BUTÉE | 8 | 8 | 8 | |
| 4 | 12037165 | CONNECTION BOXES 4/6 mm | REGLETA CONEXIÓN 4/6 mm | BORNIER 4/6mm | 10 | 10 | 10 | |
| 5 | 12037382 | BOXES LID 4/6 mm | TAPA REGLETA 4/6 mm | BANDE DE PROTECTION 4/6mm | 2 | 2 | 2 | |
| 6 | 12141406 | DIN LANE 180mm | CARRIL DIN 180mm | GUIDE DIN 180mm | 2 | 2 | 2 | |
| 7 | 12135899 | SOURCE OF ELECTRICITY PSM 2015 15V 5W | FUENTE ALIMENTACIÓN PSM 2015 15V 5W | ALIMENTATION ÉLECTRIQUE PSM 2015 15V 5W | 1 | 1 | 1 | X |
| 8 | 12133024 | PROGRAMMED FREQUENCY CONTROL (0'75KW) | VARIADOR FRECUENCIA PROGRAMADO (0'75KW) | VARIATEUR DE FRÉQUENCE PROGRAMMÉE (0'75KW) | 1 | - | - | X |
| 8 | 12133018 | PROGRAMMED FREQUENCY CONTROL | VARIADOR FRECUENCIA PROGRAMADO | VARIATEUR DE FRÉQUENCE PROGRAMMÉE | - | 1 | 1 | X |
| 9 | 12034837 | UNIVERSAL RC FILTER 220V | FILTRO RC UNIVERSAL 220V | FILTRE RC UNIVERSEL 220V | 3 | 3 | 3 | X |
| 10 | 12141406 | DIN LANE 70mm | CARRIL DIN 70mm | GUIDE DIN 70mm | 1 | 1 | 1 | |
| 11 | 12032109 | FUSE HOUSING LANE 35 V2 | PORTAFUSIBLE CARRIL 35 V2 | PORTE FUSIBLE 35 V2 | 2 | 2 | 2 | |
| 12 | 12037012 | FUSE CARTRIDGE 2A V2 10x38 | CARTUCHO FUSIBLE 2A V2 10x38 | CARTOUCHE DE FUSIBLE 2A V2 10x38 | 1 | 1 | 1 | X |
| 13 | 12116663 | FUSE CARTRIDGE 16A gG 10x38 | CARTUCHO FUSIBLE 16A gG 10x38 | CARTOUCHE DE FUSIBLE 16A gG 10X38 | 1 | - | - | X |
| 13 | 12096627 | FUSE CARTRIDGE 25A gG 10x38 | CARTUCHO FUSIBLE 25A gG 10x38 | CARTOUCHE DE FUSIBLE 25A gG 10x38 | - | 1 | 1 | X |
| 14 | 12135869 | CONNECTION BOXES | REGLETA CONEXIÓN | BORNIER | 1 | 1 | 1 | |
| 15 | 12149165 | BOXES LID 16/25 | TAPAS REGLETA 16/25 | BANDE DE PROTECTION 16/25 | 1 | 1 | 1 | |
| 16 | 12088631 | CONTACTOR LG GMC-40 (400V) | CONTACTOR LG GMC-40 (400V) | CONTACTEUR LG GMC-40 (400V) | 2 | 2 | 2 | X |
| 17 | 12124512 | MINICONTACTOR GMC-6M NO | MINICONTACTOR GMC-6M NO | MINICONTACTEUR GMC-6M NO | 1 | 1 | 1 | X |
| 18 | 12149072 | WIRE CHANNEL 40x30 (210mm) | CANAL PASAHILOS 40x30 (210mm) | CANAL DE CÂBLE 40x30 (210mm) | 4 | 4 | 4 | |
| 19 | 12149072 | WIRE CHANNEL 40x30 (540mm) | CANAL PASAHILOS 40x30 (540mm) | CANAL DE CÂBLE 40x30 (540mm) | 1 | 1 | 1 | |

## *DIGITAL ELECTRIC BOX / CUADRO ELÉCTRICO DIGITAL / TABLEAU ELECTRIQUE DIGITAL*

## ELECTRICAL HEATING / CALEFACCIÓN ELÉCTRICA / CHAUFFAGE ELECTRIQUE

## RECIRCULATING / CON RECIRCULACIÓN / AVEC RECIRCULATION

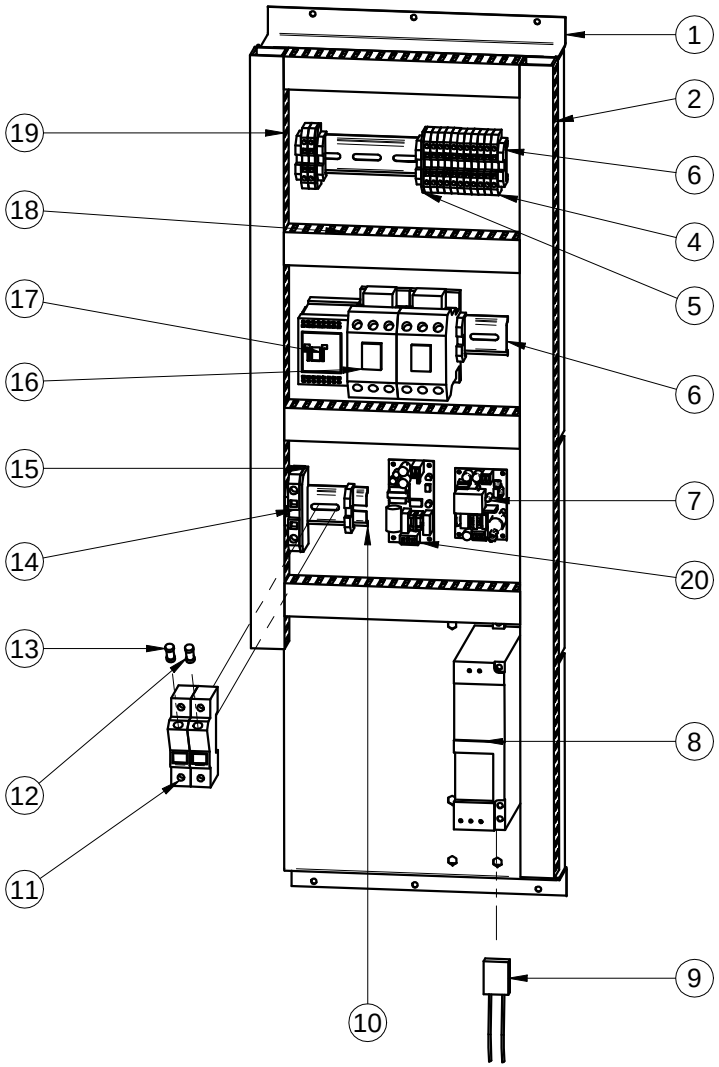

FAGOR

**DIGITAL ELECTRIC BOX - ELECTRICAL HEATING - RECIRCULATING**
**CUADRO ELÉCTRICO DIGITAL - CALEFACCIÓN ELÉCTRICA - CON RECIRCULACIÓN**
**TABLEAU ELECTRIQUE DIGITAL - CHAUFFAGE ELECTRIQUE - AVEC RECIRCULATION**

| POS. | REF. | DESCRIPTION | DESCRIPCIÓN | DESCRIPTION | SR-45 | SR-60 | SR-80 | RECOM. |
|---|---|---|---|---|---|---|---|---|
| 1 | 12145332 | ELECTRIC BOX SUPPORT | SOPORTE CUADRO ELÉCTRICO | SUPPORT DU TABLEAU ÉLECTRIQUE | 1 | 1 | 1 | |
| 2 | 12149072 | WIRE CHANNEL 40x30 (740mm) | CANAL PASAHILOS 40x30 (740mm) | CANAL DE CÂBLE 40x30 (740mm) | 1 | 1 | 1 | |
| 3 | 12037188 | END STOP | TOPE FINAL | BUTÉE | 8 | 8 | 8 | |
| 4 | 12037165 | CONNECTION BOXES 4/6 mm | REGLETA CONEXIÓN 4/6 mm | BORNIER 4/6mm | 13 | 13 | 13 | |
| 5 | 12037382 | BOXES LID 4/6 mm | TAPA REGLETA 4/6 mm | BANDE DE PROTECTION 4/6mm | 2 | 2 | 2 | |
| 6 | 12141406 | DIN LANE 180mm | CARRIL DIN 180mm | GUIDE DIN 180mm | 2 | 2 | 2 | |
| 7 | 12135899 | SOURCE OF ELECTRICITY PSM 2015 15V 5W | FUENTE ALIMENTACIÓN PSM 2015 15V 5W | ALIMENTATION ÉLECTRIQUE PSM 2015 15V 5W | 1 | 1 | 1 | X |
| 8 | 12133024 | PROGRAMMED FREQUENCY CONTROL (0'75KW) | VARIADOR FRECUENCIA PROGRAMADO (0'75KW) | VARIATEUR DE FRÉQUENCE PROGRAMMÉE (0'75KW) | 1 | - | - | X |
| 8 | 12133018 | PROGRAMMED FREQUENCY CONTROL | VARIADOR FRECUENCIA PROGRAMADO | VARIATEUR DE FRÉQUENCE PROGRAMMÉE | - | 1 | 1 | X |
| 9 | 12034837 | UNIVERSAL RC FILTER 220V | FILTRO RC UNIVERSAL 220V | FILTRE RC UNIVERSEL 220V | 3 | 3 | 3 | X |
| 10 | 12141406 | DIN LANE 70mm | CARRIL DIN 70mm | GUIDE DIN 70mm | 1 | 1 | 1 | |
| 11 | 12032109 | FUSE HOUSING LANE 35 V2 | PORTAFUSIBLE CARRIL 35 V2 | PORTE FUSIBLE 35 V2 | 2 | 2 | 2 | |
| 12 | 12037012 | FUSE CARTRIDGE 2A V2 10x38 | CARTUCHO FUSIBLE 2A V2 10x38 | CARTOUCHE DE FUSIBLE 2A V2 10x38 | 1 | 1 | 1 | X |
| 13 | 12116663 | FUSE CARTRIDGE 16A gG 10x38 | CARTUCHO FUSIBLE 16A gG 10x38 | CARTOUCHE DE FUSIBLE 16A gG 10X38 | 1 | - | - | X |
| 13 | 12096627 | FUSE CARTRIDGE 25A gG 10x38 | CARTUCHO FUSIBLE 25A gG 10x38 | CARTOUCHE DE FUSIBLE 25A gG 10x38 | - | 1 | 1 | X |
| 14 | 12135869 | CONNECTION BOXES | REGLETA CONEXIÓN | BORNIER | 1 | 1 | 1 | |
| 15 | 12149165 | BOXES LID 16/25 | TAPAS REGLETA 16/25 | BANDE DE PROTECTION 16/25 | 1 | 1 | 1 | |
| 16 | 12088631 | CONTACTOR LG GMC-40 (400V) | CONTACTOR LG GMC-40 (400V) | CONTACTEUR LG GMC-40 (400V) | 2 | 2 | 2 | X |
| 17 | 12124512 | MINICONTACTOR GMC-6M NO | MINICONTACTOR GMC-6M NO | MINICONTACTEUR GMC-6M NO | 1 | 1 | 1 | X |
| 18 | 12149072 | WIRE CHANNEL 40x30 (210mm) | CANAL PASAHILOS 40x30 (210mm) | CANAL DE CÂBLE 40x30 (210mm) | 4 | 4 | 4 | |
| 19 | 12149072 | WIRE CHANNEL 40x30 (540mm) | CANAL PASAHILOS 40x30 (540mm) | CANAL DE CÂBLE 40x30 (540mm) | 1 | 1 | 1 | |
| 20 | 12149159 | SOURCE OF ELECTRICITY PSM 2015 24V 5W | FUENTE ALIMENTACIÓN PSM 2015 24V 5W | ALIMENTATION ÉLECTRIQUE PSM 2015 24V 5W | 1 | 1 | 1 | X |

## *DIGITAL ELECTRIC BOX / CUADRO ELÉCTRICO DIGITAL / TABLEAU ELECTRIQUE DIGITAL*
## GAS-STEAM HEATING / CALEFACCIÓN GAS-VAPOR / CHAUFFAGE GAZ-VAPEUR

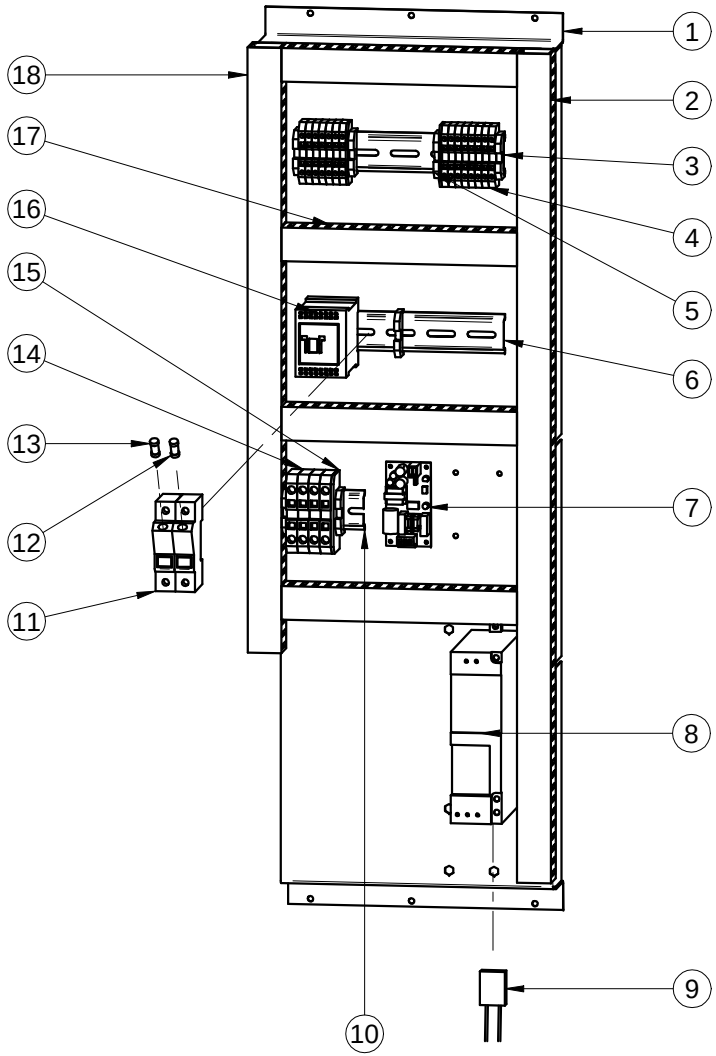

FAGOR

**DIGITAL ELECTRIC BOX - GAS-STEAM HEATING**
**CUADRO ELÉCTRICO DIGITAL - CALEFACCIÓN GAS-VAPOR**
**TABLEAU ELECTRIQUE DIGITAL - CHAUFFAGE GAZ-VAPEUR**

| POS. | REF. | DESCRIPTION | DESCRIPCIÓN | DESCRIPTION | SR-45 | SR-60 | SR-80 | RECOM. |
|---|---|---|---|---|---|---|---|---|
| 1 | 12145332 | ELECTRIC BOX SUPPORT | SOPORTE CUADRO ELÉCTRICO | SUPPORT DU TABLEAU ÉLECTRIQUE | 1 | 1 | 1 | |
| 2 | 12149072 | WIRE CHANNEL 40x30 (740mm) | CANAL PASAHILOS 40x30 (740mm) | CANAL DE CÂBLE 40x30 (740mm) | 1 | 1 | 1 | |
| 3 | 12037188 | END STOP | TOPE FINAL | BUTÉE | 8 | 8 | 8 | |
| 4 | 12037165 | CONNECTION BOXES 4/6 mm (GAS) | REGLETA CONEXIÓN 4/6 mm (GAS) | BORNIER 4/6mm (GAZ) | 15 | 15 | 15 | |
| 4 | 12037165 | CONNECTION BOXES 4/6 mm (STEAM) | REGLETA CONEXIÓN 4/6 mm (VAPOR) | BORNIER 4/6mm (VAPEUR) | 13 | 13 | 13 | |
| 5 | 12037382 | BOXES LID 4/6 mm | TAPA REGLETA 4/6 mm | BANDE DE PROTECTION 4/6mm | 2 | 2 | 2 | |
| 6 | 12141406 | DIN LANE 180mm | CARRIL DIN 180mm | GUIDE DIN 180mm | 2 | 2 | 2 | |
| 7 | 12135899 | SOURCE OF ELECTRICITY PSM 2015 15V 5W | FUENTE ALIMENTACIÓN PSM 2015 15V 5W | ALIMENTATION ÉLECTRIQUE PSM 2015 15V 5W | 1 | 1 | 1 | X |
| 8 | 12133024 | PROGRAMMED FREQUENCY CONTROL (0'75KW) | VARIADOR FRECUENCIA PROGRAMADO (0'75KW) | VARIATEUR DE FRÉQUENCE PROGRAMMÉE (0'75KW) | 1 | … | … | X |
| 8 | 12133018 | PROGRAMMED FREQUENCY CONTROL | VARIADOR FRECUENCIA PROGRAMADO | VARIATEUR DE FRÉQUENCE PROGRAMMÉE | … | 1 | 1 | X |
| 9 | 12034837 | UNIVERSAL RC FILTER 220V | FILTRO RC UNIVERSAL 220V | FILTRE RC UNIVERSEL 220V | 1 | 1 | 1 | X |
| 10 | 12141406 | DIN LANE 70mm | CARRIL DIN 70mm | GUIDE DIN 70mm | 1 | 1 | 1 | |
| 11 | 12032109 | FUSE HOUSING LANE 35 V2 | PORTAFUSIBLE CARRIL 35 V2 | PORTE FUSIBLE 35 V2 | 2 | 2 | 2 | |
| 12 | 12037012 | FUSE CARTRIDGE 2A V2 10x38 | CARTUCHO FUSIBLE 2A V2 10x38 | CARTOUCHE DE FUSIBLE 2A V2 10x38 | 1 | 1 | 1 | X |
| 13 | 12116663 | FUSE CARTRIDGE 16A gG 10x38 | CARTUCHO FUSIBLE 16A gG 10x38 | CARTOUCHE DE FUSIBLE 16A gG 10X38 | 1 | - | - | X |
| 13 | 12096627 | FUSE CARTRIDGE 25A gG 10x38 | CARTUCHO FUSIBLE 25A gG 10x38 | CARTOUCHE DE FUSIBLE 25A gG 10x38 | - | 1 | 1 | X |
| 14 | 12135869 | CONNECTION BOXES | REGLETA CONEXIÓN | BORNIER | 4 | 4 | 4 | |
| 15 | 12149165 | BOXES LID 16/25 | TAPAS REGLETA 16/25 | BANDE DE PROTECTION 16/25 | 1 | 1 | 1 | |
| 16 | 12124512 | MINICONTACTOR GMC-6M NO | MINICONTACTOR GMC-6M NO | MINICONTACTEUR GMC-6M NO | 1 | 1 | 1 | X |
| 17 | 12149072 | WIRE CHANNEL 40x30 (210mm) | CANAL PASAHILOS 40x30 (210mm) | CANAL DE CÂBLE 40x30 (210mm) | 4 | 4 | 4 | |
| 18 | 12149072 | WIRE CHANNEL 40x30 (540mm) | CANAL PASAHILOS 40x30 (540mm) | CANAL DE CÂBLE 40x30 (540mm) | 1 | 1 | 1 | |

## *DIGITAL ELECTRIC BOX / CUADRO ELÉCTRICO DIGITAL / TABLEAU ELECTRIQUE DIGITAL*

## GAS-STEAM HEATING / CALEFACCIÓN GAS-VAPOR / CHAUFFAGE GAZ-VAPEUR

## RECIRCULATING / CON RECIRCULACIÓN / AVEC RECIRCULATION

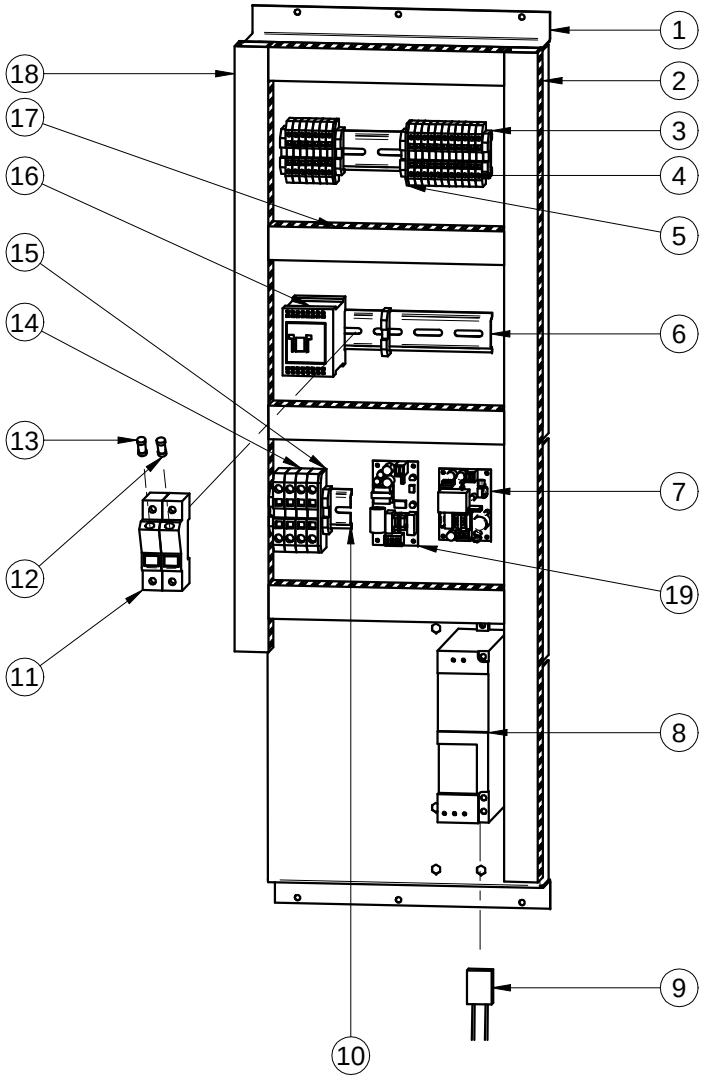

FAGOR

**DIGITAL ELECTRIC BOX - GAS-STEAM HEATING - RECIRCULATING**
**CUADRO ELÉCTRICO DIGITAL - CALEFACCIÓN GAS-VAPOR - CON RECIRCULACIÓN**
**TABLEAU ELECTRIQUE DIGITAL - CHAUFFAGE GAZ-VAPEUR - AVEC RECIRCULATION**

| POS. | REF. | DESCRIPTION | DESCRIPCIÓN | DESCRIPTION | SR-45 | SR-60 | SR-80 | RECOM. |
|---|---|---|---|---|---|---|---|---|
| 1 | 12145332 | ELECTRIC BOX SUPPORT | SOPORTE CUADRO ELÉCTRICO | SUPPORT DU TABLEAU ÉLECTRIQUE | 1 | 1 | 1 | |
| 2 | 12149072 | WIRE CHANNEL 40x30 (740mm) | CANAL PASAHILOS 40x30 (740mm) | CANAL DE CÂBLE 40x30 (740mm) | 1 | 1 | 1 | |
| 3 | 12037188 | END STOP | TOPE FINAL | BUTÉE | 8 | 8 | 8 | |
| 4 | 12037165 | CONNECTION BOXES 4/6 mm (GAS) | REGLETA CONEXIÓN 4/6 mm (GAS) | BORNIER 4/6mm (GAZ) | 18 | 18 | 18 | |
| 4 | 12037165 | CONNECTION BOXES 4/6 mm (STEAM) | REGLETA CONEXIÓN 4/6 mm (VAPOR) | BORNIER 4/6mm (VAPEUR) | 16 | 16 | 16 | |
| 5 | 12037382 | BOXES LID 4/6 mm | TAPA REGLETA 4/6 mm | BANDE DE PROTECTION 4/6mm | 2 | 2 | 2 | |
| 6 | 12141406 | DIN LANE 180mm | CARRIL DIN 180mm | GUIDE DIN 180mm | 2 | 2 | 2 | |
| 7 | 12135899 | SOURCE OF ELECTRICITY PSM 2015 15V 5W | FUENTE ALIMENTACIÓN PSM 2015 15V 5W | ALIMENTATION ÉLECTRIQUE PSM 2015 15V 5W | 1 | 1 | 1 | |
| 8 | 12133024 | PROGRAMMED FREQUENCY CONTROL (0'75KW) | VARIADOR FRECUENCIA PROGRAMADO (0'75KW) | VARIATEUR DE FRÉQUENCE PROGRAMMÉE (0'75KW) | 1 | - | - | |
| 8 | 12133018 | PROGRAMMED FREQUENCY CONTROL | VARIADOR FRECUENCIA PROGRAMADO | VARIATEUR DE FRÉQUENCE PROGRAMMÉE | - | 1 | 1 | |
| 9 | 12034837 | UNIVERSAL RC FILTER 220V | FILTRO RC UNIVERSAL 220V | FILTRE RC UNIVERSEL 220V | 1 | 1 | 1 | |
| 10 | 12141406 | DIN LANE 70mm | CARRIL DIN 70mm | GUIDE DIN 70mm | 1 | 1 | 1 | |
| 11 | 12032109 | FUSE HOUSING LANE 35 V2 | PORTAFUSIBLE CARRIL 35 V2 | PORTE FUSIBLE 35 V2 | 2 | 2 | 2 | |
| 12 | 12037012 | FUSE CARTRIDGE 2A V2 10x38 | CARTUCHO FUSIBLE 2 A V2 10x38 | CARTOUCHE DE FUSIBLE 2A V2 10x38 | 1 | 1 | 1 | |
| 13 | 12116663 | FUSE CARTRIDGE 16A gG 10x38 | CARTUCHO FUSIBLE 16A gG 10x38 | CARTOUCHE DE FUSIBLE 16A gG 10X38 | 1 | - | - | |
| 13 | 12096627 | FUSE CARTRIDGE 25A gG 10x38 | CARTUCHO FUSIBLE 25A gG 10x38 | CARTOUCHE DE FUSIBLE 25A gG 10x38 | - | 1 | 1 | |
| 14 | 12135869 | CONNECTION BOXES | REGLETA CONEXIÓN | BORNIER | 4 | 4 | 4 | |
| 15 | 12149165 | BOXES LID 16/25 | TAPAS REGLETA 16/25 | BANDE DE PROTECTION 16/25 | 1 | 1 | 1 | |
| 16 | 12124512 | MINICONTACTOR GMC-6M NO | MINICONTACTOR GMC-6M NO | MINICONTACTEUR GMC-6M NO | 1 | 1 | 1 | |
| 17 | 12149072 | WIRE CHANNEL 40x30 (210mm) | CANAL PASAHILOS 40x30 (210mm) | CANAL DE CÂBLE 40x30 (210mm) | 4 | 4 | 4 | |
| 18 | 12149072 | WIRE CHANNEL 40x30 (540mm) | CANAL PASAHILOS 40x30 (540mm) | CANAL DE CÂBLE 40x30 (540mm) | 1 | 1 | 1 | |
| 19 | 12149159 | SOURCE OF ELECTRICITY PSM 2015 24V 5W | FUENTE ALIMENTACIÓN PSM 2015 24V 5W | ALIMENTATION ÉLECTRIQUE PSM 2015 24V 5W | 1 | 1 | 1 | |

## *ANALOGIC ELECTRIC BOX / CUADRO ELÉCTRICO ANALÓGICO / TABLEAU ELECTRIQUE ANALOGIQUE*
## ELECTRICAL HEATING / CALEFACCIÓN ELÉCTRICA / CHAUFFAGE ELECTRIQUE

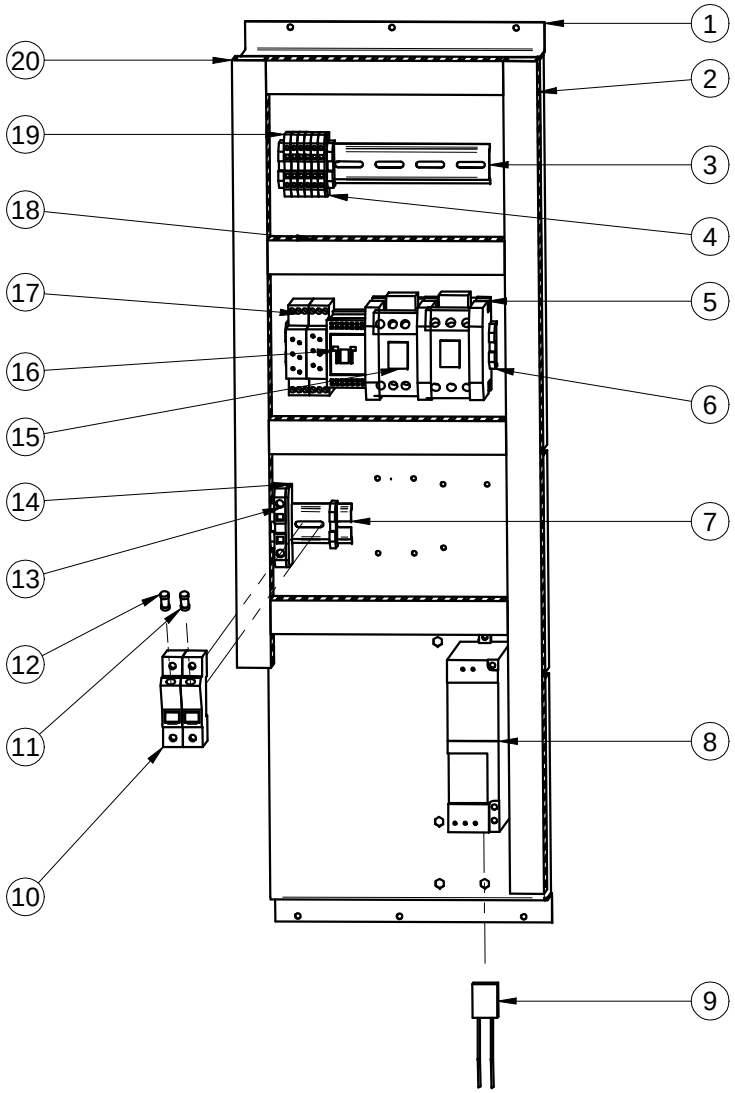

FAGOR

## ANALOGIC ELECTRIC BOX - ELECTRICAL HEATING
## CUADRO ELÉCTRICO ANALÓGICO - CALEFACCIÓN ELÉCTRICA
## TABLEAU ELECTRIQUE ANALOGIQUE - CHAUFFAGE ELECTRIQUE

| POS. | REF. | DESCRIPTION | DESCRIPCIÓN | DESCRIPTION | SR-45 | SR-60 | SR-80 | RECOM. |
|---|---|---|---|---|---|---|---|---|
| 1 | 12145332 | ELECTRIC BOX SUPPORT | SOPORTE CUADRO ELÉCTRICO | SUPPORT DU TABLEAU ÉLECTRIQUE | 1 | 1 | 1 | |
| 2 | 12149072 | WIRE CHANNEL 40x30 (740mm) | CANAL PASAHILOS 40x30 (740mm) | CANAL DE CÂBLE 40x30 (740mm) | 1 | 1 | 1 | |
| 3 | 12141406 | DIN LANE 180mm | CARRIL DIN 180mm | GUIDE DIN 180mm | 2 | 2 | 2 | |
| 4 | 12037382 | BOXES LID 4/6 mm | TAPA REGLETA 4/6 mm | BANDE DE PROTECTION 4/6mm | 1 | 1 | 1 | |
| 5 | 12037188 | AUXILIARY CONTACTOR | CONTACTOR AUXILIAR | CONTACTEUR AUXILIAIRE | 1 | 1 | 1 | X |
| 6 | 12037188 | END STOP | TOPE FINAL | BUTÉE | 6 | 6 | 6 | |
| 7 | 12141406 | DIN LANE 70mm | CARRIL DIN 70mm | GUIDE DIN 70mm | 1 | 1 | 1 | |
| 8 | 12133024 | PROGRAMMED FREQUENCY CONTROL (0'75KW) | VARIADOR FRECUENCIA PROGRAMADO (0'75KW) | VARIATEUR DE FRÉQUENCE PROGRAMMÉE (0'75KW) | 1 | - | - | X |
| 8 | 12133018 | PROGRAMMED FREQUENCY CONTROL | VARIADOR FRECUENCIA PROGRAMADO | VARIATEUR DE FRÉQUENCE PROGRAMMÉE | - | 1 | 1 | X |
| 9 | 12034837 | UNIVERSAL RC FILTER 220V | FILTRO RC UNIVERSAL 220V | FILTER RC UNIVERSAL 220V | 3 | 3 | 3 | X |
| 10 | 12032109 | FUSE HOUSING LANE 35 V2 | PORTAFUSIBLE CARRIL 35 V2 | PORTE FUSIBLE 35 V2 | 2 | 2 | 2 | |
| 11 | 12037012 | FUSE CARTRIDGE 2A V2 10x38 | CARTUCHO FUSIBLE 2 A V2 10x38 | CARTOUCHE DE FUSIBLE 2A V2 10x38 | 1 | 1 | 1 | X |
| 12 | 12116663 | FUSE CARTRIDGE 16A gG 10x38 | CARTUCHO FUSIBLE 16A gG 10x38 | CARTOUCHE DE FUSIBLE 16A gG 10X38 | 1 | - | - | X |
| 12 | 12096627 | FUSE CARTRIDGE 25A gG 10x38 | CARTUCHO FUSIBLE 25A gG 10x38 | CARTOUCHE DE FUSIBLE 25A gG 10x38 | - | 1 | 1 | X |
| 13 | 12135869 | CONNECTION BOXES 16/25 | REGLETA CONEXIÓN 16/25 | BORNIER 16/25 | 1 | 1 | 1 | |
| 14 | 12149165 | BOXES LID 16/25 | TAPAS REGLETA 16/25 | BANDE DE PROTECTION 16/25 | 1 | 1 | 1 | |
| 15 | 12088631 | CONTACTOR LG GMC-40 | CONTACTOR LG GMC-40 | CONTACTEUR LG GMC-40 | 2 | 2 | 2 | X |
| 16 | 12132075 | CONTACTOR MC 9A | CONTACTOR MC 9A | CONTACTEUR MC 9A | 1 | 1 | 1 | X |
| 17 | 12149171 | RELPOL TIMER | TEMPORIZADOR RELPOL | TEMPORISATEUR RELPOL | 2 | 2 | 2 | X |
| 18 | 12149072 | WIRE CHANNEL 40x30 (210mm) | CANAL PASAHILOS 40x30 (210mm) | CANAL DE CÂBLE 40x30 (210mm) | 4 | 4 | 4 | |
| 19 | 12037165 | CONNECTION BOXES | REGLETA CONEXIÓN | BORNIER | 6 | 6 | 6 | |
| 20 | 12149072 | WIRE CHANNEL 40x30 (540mm) | CANAL PASAHILOS 40x30 (540mm) | CANAL DE CÂBLE 40x30 (540mm) | 1 | 1 | 1 | |

## *ANALOGIC ELECTRIC BOX / CUADRO ELÉCTRICO ANALÓGICO / TABLEAU ELECTRIQUE ANALOGIQUE*

## GAS-TEAM HEATING / CALEFACCIÓN GAS-VAPOR / CHAUFFAGE GAZ-VAPEUR

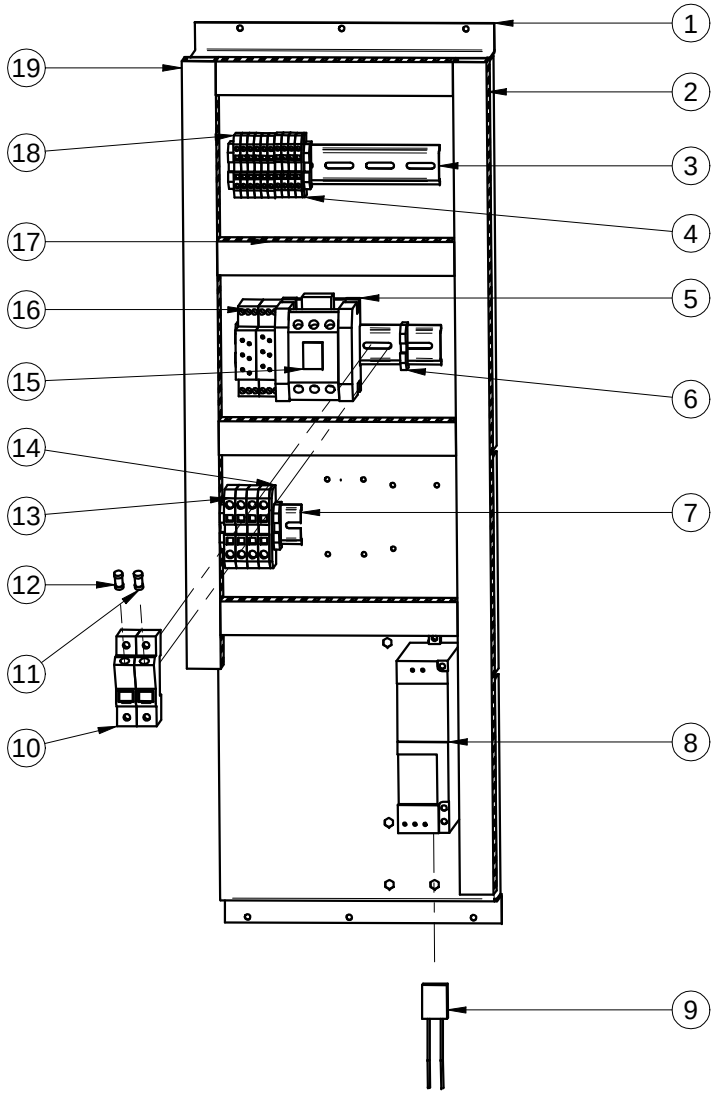

FAGOR

**ANALOGIC ELECTRIC BOX - GAS-STEAM HEATING**
**CUADRO ELÉCTRICO ANALÓGICO - CALEFACCIÓN GAS-VAPOR**
**TABLEAU ELECTRIQUE ANALOGIQUE - CHAUFFAGE GAZ-VAPEUR**

| POS. | REF. | DESCRIPTION | DESCRIPCIÓN | DESCRIPTION | SR-45 | SR-60 | SR-80 | RECOM. |
|---|---|---|---|---|---|---|---|---|
| 1 | 12145332 | ELECTRIC BOX SUPPORT | SOPORTE CUADRO ELÉCTRICO | SUPPORT DU TABLEAU ÉLECTRIQUE | 1 | 1 | 1 | |
| 2 | 12149072 | WIRE CHANNEL 40x30 (740mm) | CANAL PASAHILOS 40x30 (740mm) | CANAL DE CÂBLE 40x30 (740mm) | 1 | 1 | 1 | |
| 3 | 12141406 | DIN LANE 180mm | CARRIL DIN 180mm | GUIDE DIN 180mm | 2 | 2 | 2 | |
| 4 | 12037382 | BOXES LID 4/6 mm | TAPA REGLETA 4/6 mm | BANDE DE PROTECTION 4/6mm | 1 | 1 | 1 | |
| 5 | 12037188 | AUXILIARY CONTACTOR | CONTACTOR AUXILIAR | CONTACTEUR AUXILIAIRE | 1 | 1 | 1 | X |
| 6 | 12037188 | END STOP | TOPE FINAL | BUTÉE | 6 | 6 | 6 | |
| 7 | 12141406 | DIN LANE 70mm | CARRIL DIN 70mm | GUIDE DIN 70mm | 1 | 1 | 1 | |
| 8 | 12133024 | PROGRAMMED FREQUENCY CONTROL (0'75KW) | VARIADOR FRECUENCIA PROGRAMADO (0'75KW) | VARIATEUR DE FRÉQUENCE PROGRAMMÉE (0'75KW) | 1 | - | - | X |
| 8 | 12133018 | PROGRAMMED FREQUENCY CONTROL | VARIADOR FRECUENCIA PROGRAMADO | VARIATEUR DE FRÉQUENCE PROGRAMMÉE | - | 1 | 1 | X |
| 9 | 12034837 | UNIVERSAL RC FILTER 220V | FILTRO RC UNIVERSAL 220V | FILTER RC UNIVERSAL 220V | 1 | 1 | 1 | X |
| 10 | 12032109 | FUSE HOUSING LANE 35 V2 | PORTAFUSIBLE CARRIL 35 V2 | PORTE FUSIBLE 35 V2 | 2 | 2 | 2 | |
| 11 | 12037012 | FUSE CARTRIDGE 2A V2 10x38 | CARTUCHO FUSIBLE 2 A V2 10x38 | CARTOUCHE DE FUSIBLE 2A V2 10x38 | 1 | 1 | 1 | X |
| 12 | 12116663 | FUSE CARTRIDGE 16A gG 10x38 | CARTUCHO FUSIBLE 16A gG 10x38 | CARTOUCHE DE FUSIBLE 16A gG 10X38 | 1 | - | - | X |
| 12 | 12096627 | FUSE CARTRIDGE 25A gG 10x38 | CARTUCHO FUSIBLE 25A gG 10x38 | CARTOUCHE DE FUSIBLE 25A gG 10x38 | - | 1 | 1 | X |
| 13 | 12135869 | CONNECTION BOXES 16/25 | REGLETA CONEXIÓN 16/25 | BORNIER 16/25 | 4 | 4 | 4 | |
| 14 | 12149165 | BOXES LID 16/25 | TAPAS REGLETA 16/25 | BANDE DE PROTECTION 16/25 | 1 | 1 | 1 | |
| 15 | 12132075 | CONTACTOR MC 9A | CONTACTOR MC 9A | CONTACTEUR MC 9A | 1 | 1 | 1 | X |
| 16 | 12149072 | WIRE CHANNEL 40x30 (210mm) | CANAL PASAHILOS 40x30 (210mm) | CANAL DE CÂBLE 40x30 (210mm) | 4 | 4 | 4 | |
| 17 | 12037165 | CONNECTION BOXES 4/6 mm (GAS) | REGLETA CONEXIÓN 4/6 mm (GAS) | BORNIER 4/6 mm (GAZ) | 10 | 10 | 10 | |
| 17 | 12037165 | CONNECTION BOXES 4/6 mm (STEAM) | REGLETA CONEXIÓN 4/6 mm (VAPOR) | BORNIER 4/6 mm (VAPEUR) | 9 | 9 | 9 | |
| 18 | 12149072 | WIRE CHANNEL 40x30 (540mm) | CANAL PASAHILOS 40x30 (540mm) | CANAL DE CÂBLE 40x30 (540mm) | 1 | 1 | 1 | |

FAGOR

## ANALOGIC ELECTRIC BOX - GAS-STEAM HEATING
## CUADRO ELÉCTRICO ANALÓGICO - CALEFACCIÓN GAS-VAPOR
## TABLEAU ELECTRIQUE ANALOGIQUE - CHAUFFAGE GAZ-VAPEUR

| POS. | REF. | DESCRIPTION | DESCRIPCIÓN | DESCRIPTION | SR-45 | SR-60 | SR-80 | RECOM. |
|---|---|---|---|---|---|---|---|---|
| 1 | 12145332 | ELECTRIC BOX SUPPORT | SOPORTE CUADRO ELÉCTRICO | SUPPORT DU TABLEAU ÉLECTRIQUE | 1 | 1 | 1 | |
| 2 | 12149072 | WIRE CHANNEL 40x30 (740mm) | CANAL PASAHILOS 40x30 (740mm) | CANAL DE CÂBLE 40x30 (740mm) | 1 | 1 | 1 | |
| 3 | 12141406 | DIN LANE 180mm | CARRIL DIN 180mm | GUIDE DIN 180mm | 2 | 2 | 2 | |
| 4 | 12037382 | BOXES LID 4/6 mm | TAPA REGLETA 4/6 mm | BANDE DE PROTECTION 4/6mm | 1 | 1 | 1 | |
| 5 | 12037188 | AUXILIARY CONTACTOR | CONTACTOR AUXILIAR | CONTACTEUR AUXILIAIRE | 2 | 2 | 2 | X |
| 6 | 12037188 | END STOP | TOPE FINAL | BUTÉE | 6 | 6 | 6 | |
| 7 | 12141406 | DIN LANE 70mm | CARRIL DIN 70mm | GUIDE DIN 70mm | 1 | 1 | 1 | |
| 8 | 12133024 | PROGRAMMED FREQUENCY CONTROL | VARIADOR FRECUENCIA PROGRAMADO | VARIATEUR DE FRÉQUENCE PROGRAMMÉE | 1 | - | - | X |
| 8 | 12133018 | PROGRAMMED FREQUENCY CONTROL | VARIADOR FRECUENCIA PROGRAMADO | VARIATEUR DE FRÉQUENCE PROGRAMMÉE | - | 1 | 1 | X |
| 9 | 12034837 | UNIVERSAL RC FILTER 220V | FILTRO RC UNIVERSAL 220V | FILTER RC UNIVERSAL 220V | 1 | 1 | 1 | X |
| 10 | 12032109 | FUSE HOUSING LANE 35 V2 | PORTAFUSIBLE CARRIL 35 V2 | PORTE FUSIBLE 35 V2 | 2 | 2 | 2 | |
| 11 | 12037012 | FUSE CARTRIDGE 2A V2 10x38 | CARTUCHO FUSIBLE 2 A V2 10x38 | CARTOUCHE DE FUSIBLE 2A V2 10x38 | 1 | 1 | 1 | X |
| 12 | 12116663 | FUSE CARTRIDGE 16A gG 10x38 | CARTUCHO FUSIBLE 16A gG 10x38 | CARTOUCHE DE FUSIBLE 16A gG 10X38 | 1 | 1 | 1 | X |
| 13 | 12135869 | CONNECTION BOXES | REGLETA CONEXIÓN | BORNIER | 1 | 1 | 1 | |
| 14 | 12149165 | BOXES LID 16/25 | TAPAS REGLETA 16/25 | BANDE DE PROTECTION 16/25 | 1 | 1 | 1 | |
| 15 | 12088631 | CONTACTOR LG GMC-40 | CONTACTOR LG GMC-40 | CONTACTEUR LG GMC-40 | 2 | 2 | 2 | X |
| 16 | 12124512 | MINICONTACTOR GMC-6M NO | MINICONTACTOR GMC-6M NO | MINICONTACTEUR GMC-6M NO | 1 | 1 | 1 | X |
| 17 | 12149072 | WIRE CHANNEL 40x30 (210mm) | CANAL PASAHILOS 40x30 (210mm) | CANAL DE CÂBLE 40x30 (210mm) | 4 | 4 | 4 | |
| 18 | 12037165 | CONNECTION BOXES 4/6 mm (GAS) | REGLETA CONEXIÓN 4/6 mm (GAS) | BORNIER 4/6 mm (GAZ) | 10 | 10 | 10 | |
| 18 | 12037165 | CONNECTION BOXES 4/6 mm (STEAM) | REGLETA CONEXIÓN 4/6 mm (VAPOR) | BORNIER 4/6 mm (VAPEUR) | 9 | 9 | 9 | |
| 19 | 12149072 | WIRE CHANNEL 40x30 (540mm) | CANAL PASAHILOS 40x30 (540mm) | CANAL DE CÂBLE 40x30 (540mm) | 1 | 1 | 1 | |

FAGOR

| CI: | Time-adj: 1 |
|---|---|
| | Range : 1m |
| | Function: Bp |

| TSR: | Time-adj: 1 |
|---|---|
| | Range : 10s |
| | Function: R |

| | |
|---|---|
| TSR | Timer rot. sensor/ Temp. dét. rot./ Temporizador sensor rot. |
| SR | Rotatio sensor/ Détecteur rotative/ Sensor rotativo |
| V | Micropr. Cool Fan/ Ventilador refrigeración microprocesador. |
| VF2 | Frequency inverter M2/Variateur fréquence/Variador freqüencia M2 |
| TS | Safety thermostat/thermostat sécurité/Termostato seguridad |
| TM1 | Thermic M1/Thermique M1/Termico M1 |
| TEMP | Timer/Temporizateur/Temporizador |
| T | Transformer/Transformateur/Transformador |
| SH | Humidity sensor/Sonde humidité/Sonda humedad |
| RS | Reset/Reset/Reset |
| PS | Start push-button/Bouton start/Pulsador start |
| PR | Reset pilot/Voyant reset/Piloto reset |
| PM | Start up pilot/Voyant start/Piloto marcha |
| PE | Emergency stop/Arrêt d'urgence/Paro emergencia |
| PC | Heating pilot/Voyant chauffage/Piloto calefacción |
| MT | Filter switch/Contact filtre/Micro tapa filtro |
| MP | Door switch/Contact porte/Micro puerta |
| M2 | Drum motor/Moteur tambour/Motor tambor |
| M1 | Extractor motor/Moteur ventilateur/Motor ventilador |
| KR1 | Resistors contactor/Contacteur résistances/Contactor resistencias |
| KM1 | M1 contactor/M1 ventilateur/Contactor M1 |
| HD | Humidity control/Controle digital humidité/Humidostato digital |
| F | Fuse/Fusible/Fusible |
| TV | Steam trap motor/ Moteur control vapeur/ Motor trampilla vapor |
| D | Depressor/Depressostat/Depresor |
| CT | Thermostat contactor/Contact inversion/Contacto termostato |
| CIO | Ionization circuit/Circuit ionisation/Circuito ionización |
| CI | Inversor contact/Contact inversion/Contacto inversor |
| IG | Main switch/Commutateur principal/Interruptor general |

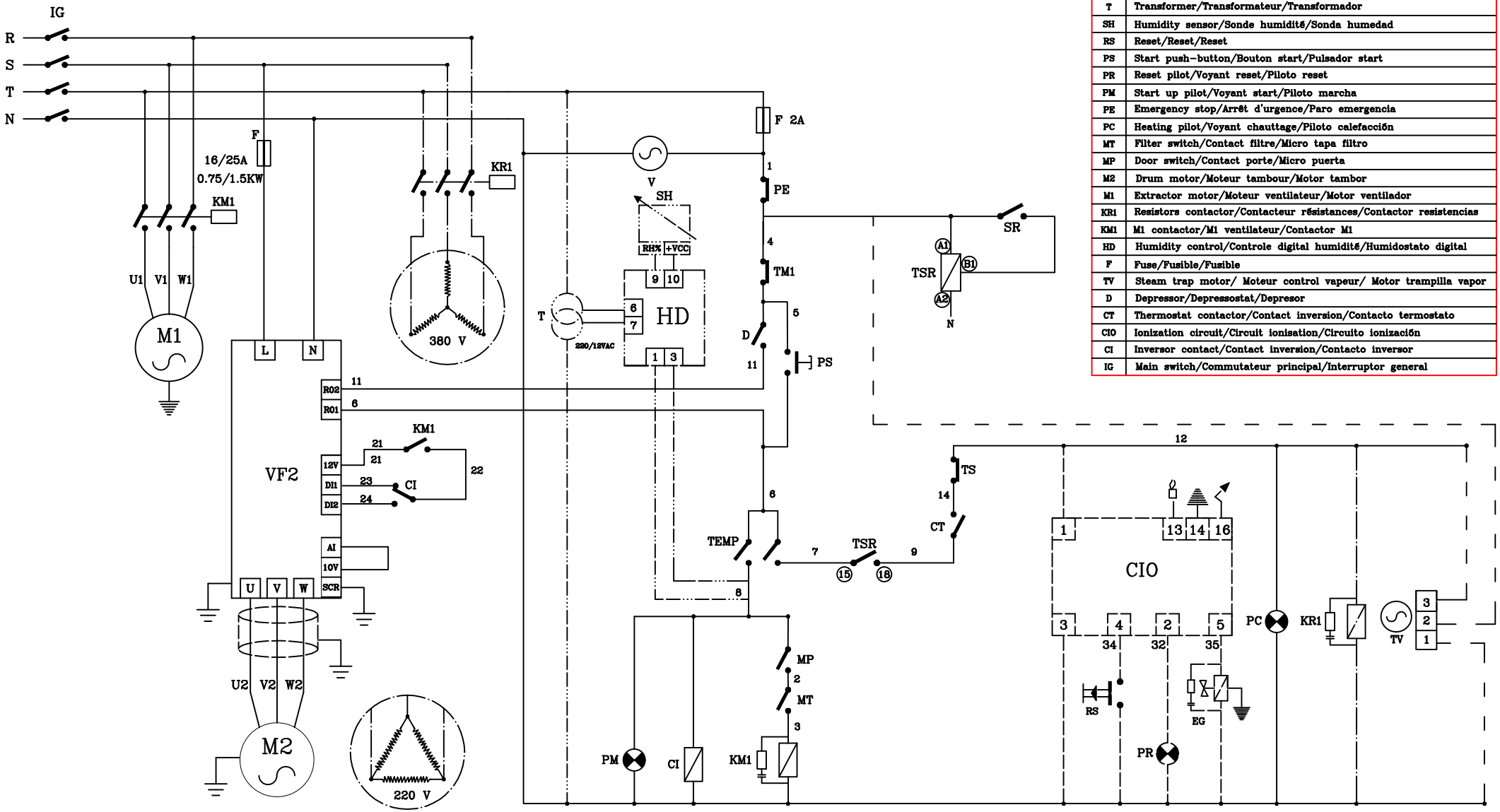


All the version/Toutes les versions/Todos los modelos
Only gas heating/Uniquement chauffage gaz/Sólo modelos calefacción a gas
Only electric heating/Uniquement chauffage électrique/Sólo modelos calefacción eléctrica
Only steam heating/Uniquement chauffage vapeur/Sólo modelos calefacción a vapor
Only with control humidity/Uniquement avec contrôle humidité/Sólo modelos con humidostato
Only steam heating and cooldown/Uniquement chauffage vapeur et Cooldown/Sólo modelos con calefacción a vapor con Cooldown

| Date/Date/Fecha | Version/Version/ Versión | Code/Code/Código |
|---|---|---|
| 09/09/15 | 3 | S279 |

ONNERA GROUP

400V 3P+N+G

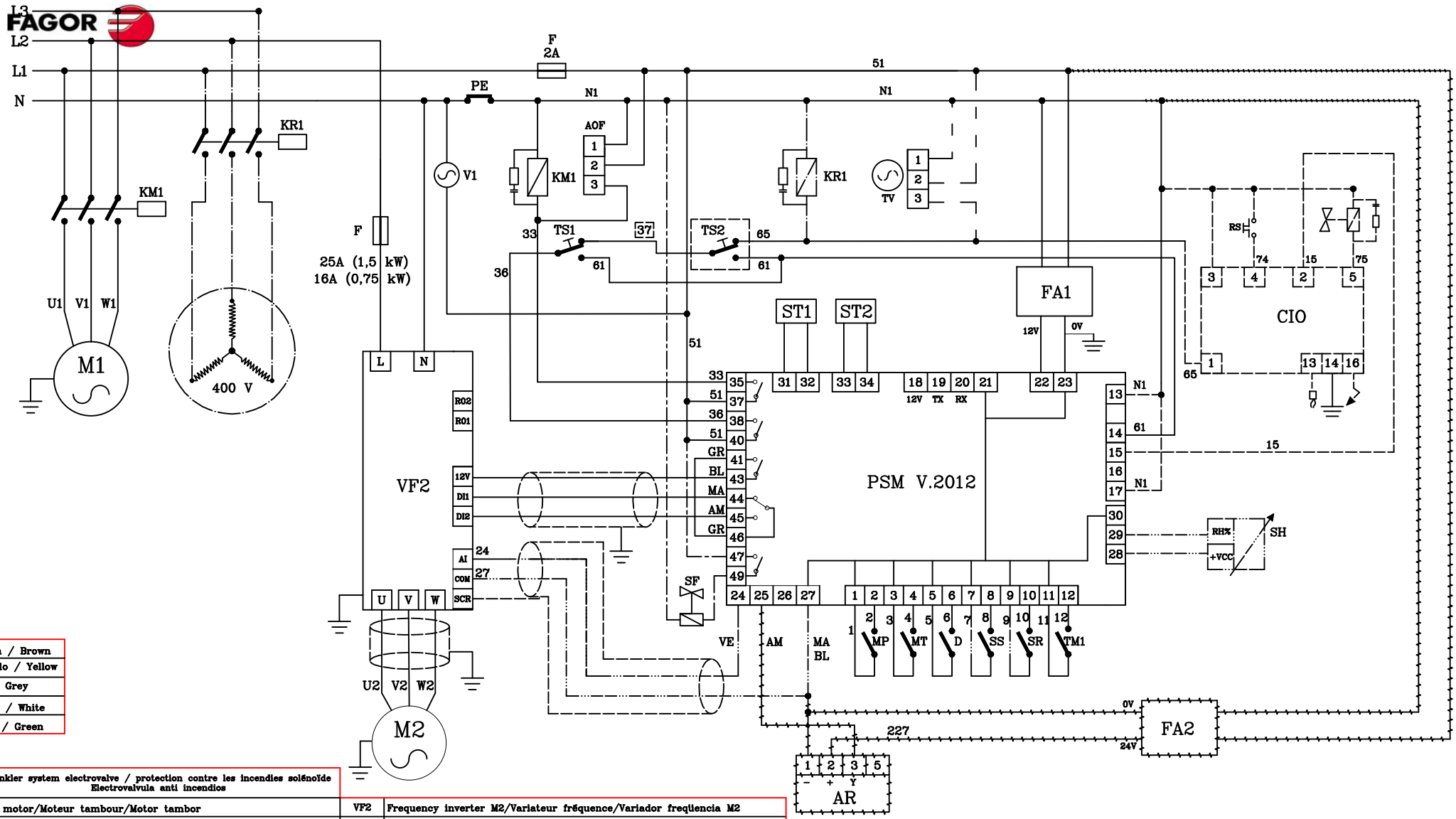


| | |
|---|---|
| MA | Marrón / Brown |
| AM | Amarillo / Yellow |
| GR | Gris / Grey |
| BL | Blanco / White |
| VE | Verde / Green |

| | |
|---|---|
| SF | Sprinkler system electrovalve / protection contre les incendies solénoïde Electrovalvula anti incendios |
| M2 | Drum motor/Moteur tambour/Motor tambor |
| M1 | Extractor motor/Moteur ventilateur/Motor ventilador |
| KR1 | Resistors contactor/Contacteur résistances/Contactor resistencias |
| KM1 | M1 contactor/Contacteur M1/Contactor M1 |
| AR | Rotary actuator/Actionneur rotatif/Actuador rotativo |
| F | Fuse/Fusible/Fusible |
| TV | Steam damper/trappe vapeur/Trampilla vapor |
| D | Depressor/Depressostat/Depresor |
| CIO | Ionization circuit/Circuit ionisation/Circuito ionización |
| SR | Rotation sensor/Détecteur rotative/Sensor rotativo |
| FA1 | 12V DC Source/Font de 12V DC/Fuente de 12V DC |
| FA2 | 24V DC Source/Font de 24V DC/Fuente de 24V DC |
| PSM | Microprocessor/Microprocesseur/Microprocesador |

| | |
|---|---|
| VF2 | Frequency inverter M2/Variateur fréquence/Variador freqüencia M2 |
| TS1 | Safety thermostat/thermostat sécurité/Termostato seguridad |
| TS2 | Aux. gas safety therm./thermostat séc. gaz aux./Termostato seg. aux. gas |
| TM1 | Thermic M1/Thermique M1/Termico M1 |
| ST1 | Drum temp. sensor /Sonde temp. tambour /Sonda temp. tambor |
| ST2 | Upper temp. sensor /Sonde temp. Sup /Sonda temp. Superior |
| SH | Humidity sensor/Sonde humidité/Sonda humedad |
| RS | Reset/Reset/Reset |
| PE | Emergency stop/Arrêt d'urgence/Paro emergencia |
| MT | Filter switch/Contact filtre/Micro tapa filtro |
| MP | Door switch/Contact porte/Micro puerta |
| VI | Microprocessor fan/Ventilateur du micropro./Ventilador Micropro. |
| AOF * | Air outlet flap / Sortie d'air trappe / Trampilla de salida de aire |

* Optional with clean room / En option avec clean room / Opcional con clean room

All the version/Toutes les versions/Todos los modelos
Only gas heating/Uniquement chauffage gaz/Sólo calefacción a gas
Only electric heating/Uniquement chauffage électrique/Sólo calefacción eléctrica
Only steam heating/Uniquemente chauffage vapeur/Sólo calefacción a vapor
Only with control humidity/Uniquement avec contrôle humidité/Sólo con humidostato
Only with recirculating air/Uniquement recirculation d'air/Solo recirculación de aire
Only with sprinkler system/
Solo con sistema anti incendios

| Date/Date/Fecha | Version/Version/Versión | Code/Code/Código |
|---|---|---|
| 16/12/14 | 1 | S298 |

ONNERA GROUP