DESPIECE TECNICO

# Cocinas a Gas
# Fourneaux a Gaz
# Gas Cookers
# Gas Herde
# Cucine a Gas

**GAMA 900**

**Modelos:**

**CG 9-20**
**CG 9-40**
**CG 9-60**
**CG 9-41**
**CG 9-61**
**CG 9-82**

***Octubre 2006 October***

**Fagor Industrial**

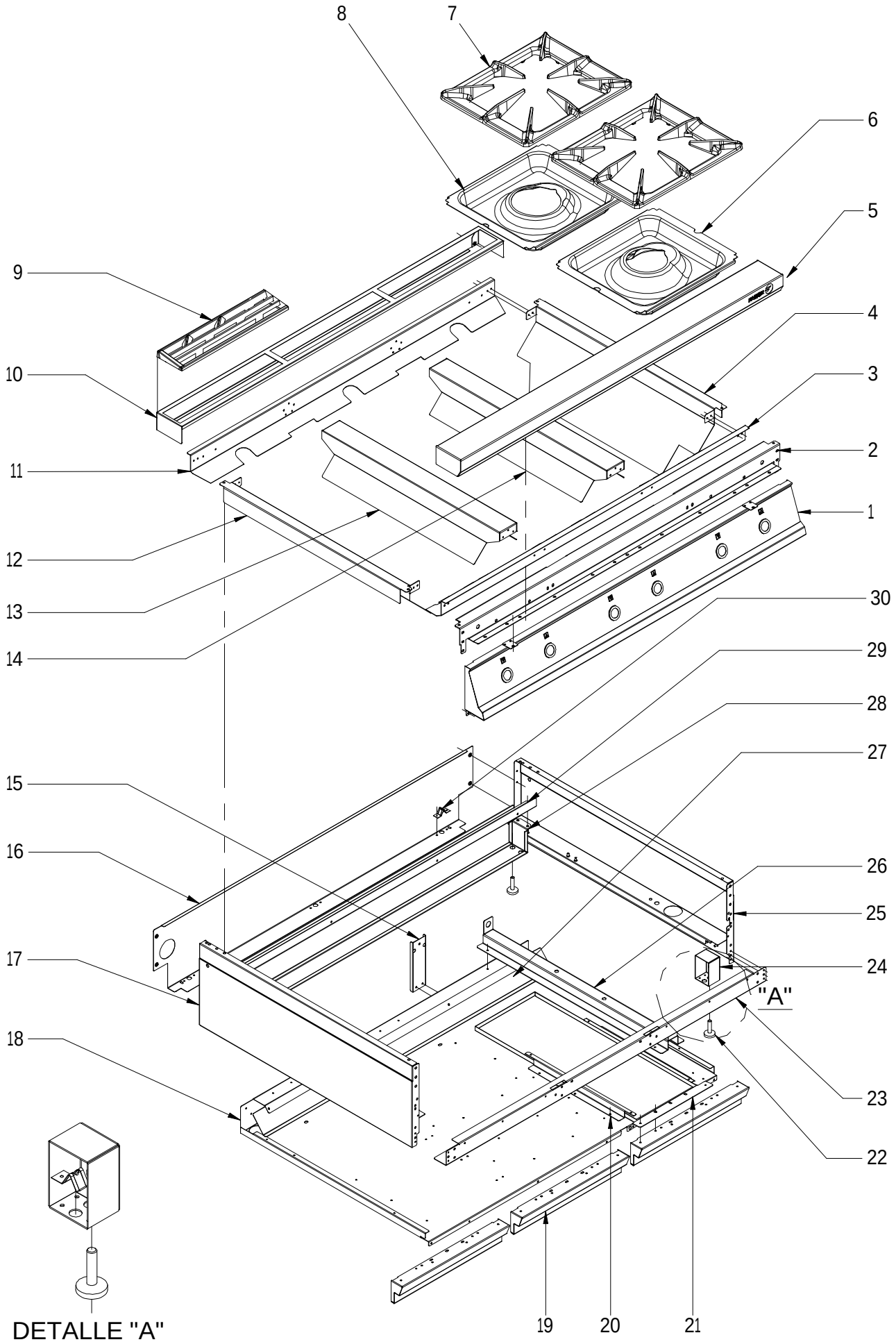


DETALLE "A"

| N plano | Firma | Fecha | Aparato | MUEBLE | Lamina | |
|---|---|---|---|---|---|---|
| C-1663 | | 2006-10 | COCINAS CG9-20, 40, 60 | | 1 | Fagor Industrial S.Coop. FAGOR Oñate |

| MOD. | COCINAS | ZONA | MUEBLE | PLANO | C-1663 |
|---|---|---|---|---|---|

| ITEM | CODIGO | DENOMINACION | TEXTO | CG9-20 | CG9-40 | CG9-60 | | | | | NOTAS |
|---|---|---|---|---|---|---|---|---|---|---|---|
| 1 | U012801000 | PORTAMANDOS COMPL. CG9-20 | | 1 | _ | _ | | | | | |
| 1 | U022801000 | PORTAMANDOS COMPL. CG9-40 | | _ | 1 | _ | | | | | |
| 1 | U032801000 | PORTAMANDOS COMPL. CG9-60 | | _ | _ | 1 | | | | | |
| | Q152004000 | TORNIL, APLASTADO M5x13 A304 | | 2 | 2 | 2 | | | | | |
| 2 | X162680000 | ESCUA INTER AMAR ANTE 1/2M | | 1 | _ | _ | | | | | |
| 2 | U022605000 | ESCUA INTER AMAR ANTE 1 M | | _ | 1 | _ | | | | | |
| 2 | U032611000 | ESCUA INTER AMAR ANTE 1 1/2M | | _ | _ | 1 | | | | | |
| | Q221342000 | REMACHE EXAGONAL M5 | | 2 | 2 | 2 | | | | | |
| | Q152004000 | TORNIL, APLASTADO M5x13 A304 | | 6 | 6 | 6 | | | | | |
| | Q221343000 | REMACHE EXAGONAL M6 | | 2 | 2 | 3 | | | | | |
| | Q302022000 | ARANDELA 16x6x1,2 A304 | | 4 | 4 | 6 | | | | | |
| 3 | U015401000 | ANTER, INTER MESA 1/2M | | 1 | _ | _ | | | | | |
| 3 | U025410000 | ANTER, INTER MESA 1M | | _ | 1 | _ | | | | | |
| 3 | U035401000 | ANTER INTER MESA 1 1/2M | | _ | _ | 1 | | | | | |
| | Q419005000 | REMACHE 4x8 ALMG3 / ALUMINIO | | 8 | 8 | 10 | | | | | |
| 4 | U565450000 | LATERAL DERECHO DE MESA | | 1 | 1 | 1 | | | | | |
| | Q152004000 | TORNIL, APLASTADO M5x13 A304 | | 2 | 2 | 2 | | | | | |
| 5 | U025427000 | ANTERIOR MESA 1/2M | | 1 | _ | _ | | | | | |
| 5 | U025415000 | ANTERIOR MESA 1 M | | _ | 1 | _ | | | | | |
| 5 | U035406000 | ANTERIOR MESA 1 1/2M | | _ | _ | 1 | | | | | |
| | Q152004000 | TORNIL, APLASTADO M5x13 A304 | | 2 | 2 | 3 | | | | | |
| | Q302022000 | ARANDELA 16x6x1,2 A304 | | 2 | 2 | 3 | | | | | |
| 6 | U025404000 | VERTEDERO QUEMADOR 4000 | | 1 | 2 | 3 | | | | | |
| 7 | U025411000 | PARRILLA GAMA 900 | | 2 | 4 | 6 | | | | | |
| 8 | U025405000 | VERTEDERO QUEMADOR 8000 | | 1 | 2 | 3 | | | | | |
| 9 | R205425000 | EMBELLECEDOR ESMALTE | | 1 | 2 | 3 | | | | | |
| 10 | R205429000 | SOPORTE EMBELLECEDOR 1/2M | | 1 | _ | _ | | | | | |
| 10 | R205428000 | SOPORTE EMBELLECEDOR 1 M | | _ | 1 | _ | | | | | |
| 10 | R205430000 | SOPORTE EMBELLECEDOR 1 1/2M | | _ | _ | 1 | | | | | |
| | Q412000000 | REMACHE TUBULAR 4x8 | | 2 | 2 | 2 | | | | | |
| | | | | | | | | | | | |

| MOD. | COCINAS | ZONA | MUEBLE | PLANO | C-1663 |
|---|---|---|---|---|---|

| ITEM | CODIGO | DENOMINACION | TEXTO | CG9-20 | CG9-40 | CG9-60 | | | | | NOTAS |
|---|---|---|---|---|---|---|---|---|---|---|---|
| 11 | U015400000 | POSTER INTE MESA 1/2M | | 1 | _ | _ | | | | | |
| 11 | U025409000 | POSTER INTE MESA 1 M | | _ | 1 | _ | | | | | |
| 11 | U035400000 | POSTER INTE MESA 1 1/2M | | _ | _ | 1 | | | | | |
| 12 | U025408000 | LATERAL IZQUIERDO DE MESA | | 1 | 1 | 1 | | | | | |
| | Q152004000 | TORNIL, APLASTADO M5x13 A304 | | 2 | 2 | 2 | | | | | |
| 13 | U565454000 | CENTRAL DE MESA | | _ | 1 | 1 | | | | | |
| | Q419005000 | REMACHE 4x8 ALMG3 / ALUMINIO | | _ | 6 | 12 | | | | | |
| 14 | U585454000 | CENTRAL DE MESA DERECHA | | _ | _ | 1 | | | | | |
| 15 | U022604000 | SOPORTE CENTRAL MESA | | _ | 1 | 2 | | | | | |
| | Q419005000 | REMACHE 4x8 ALMG3 / ALUMINIO | | _ | 4 | 8 | | | | | |
| 16 | R152811000 | PANEL POSTERIOR 0,5 M G9-00 | | 1 | _ | _ | | | | | |
| 16 | R162813000 | PANEL POSTERIOR 1 M G9-00 | | _ | 1 | _ | | | | | |
| 16 | U572850000 | PANEL POSTERIOR 1,5 M G9-00 | | _ | _ | 1 | | | | | |
| | Q419005000 | REMACHE 4x8 ALMG3 / ALUMINIO | | 2 | 4 | 8 | | | | | |
| 17 | R062811000 | LATERAL COMPLETO IZDO, G9-00 | | 1 | 1 | 1 | | | | | |
| | Q221342000 | REMACHE EXAGONAL M5 | | 1 | 1 | 2 | | | | | |
| | Q221342000 | REMACHE EXAGONAL M5 | | 2 | 2 | 3 | | | | | |
| | Q221343000 | REMACHE EXAGONAL M6 | | 4 | 4 | 4 | | | | | |
| 18 | U012600000 | BASE BANDEJAS 1/2 M | | 1 | _ | _ | | | | | |
| 18 | U022602000 | BASE BANDEJAS 1 M | | | 1 | _ | | | | | |
| 18 | U032602000 | BASE BANDEJAS 1 1/2 M | | _ | _ | 1 | | | | | |
| | Q152004000 | TORNIL, APLASTADO M5x13 A304 | | 2 | 6 | 6 | | | | | |
| | Q419005000 | REMACHE 4x8 ALMG3 / ALUMINIO | | 2 | 3 | 3 | | | | | |
| 19 | H012821000 | ASA BANDEJA IZQUIER, DERECHA | | 1 | 2 | 3 | | | | | |
| | Q419005000 | REMACHE 4x8 ALMG3 / ALUMINIO | | 3 | 4 | 6 | | | | | |
| 20 | U562640000 | GUIA CENTRAL BANDEJAS | | _ | 4 | 6 | | | | | |
| | Q419005000 | REMACHE 4x8 ALMG3 / ALUMINIO | | _ | 12 | 18 | | | | | |
| 21 | H012820000 | BANDEJA COMPLETA CG9-00 | | 1 | 2 | 3 | | | | | |
| 22 | Z200107000 | PATA | | 4 | 4 | 4 | | | | | |
| | | | | | | | | | | | |
| | | | | | | | | | | | |

| MOD. | COCINAS | ZONA | MUEBLE | PLANO | C-1663 |
|---|---|---|---|---|---|

| ITEM | CODIGO | DENOMINACION | TEXTO | CG9-20 | CG9-40 | CG9-60 | | | | | NOTAS |
|---|---|---|---|---|---|---|---|---|---|---|---|
| 23 | U652651000 | LISTON AMARRE ZOCALO 1/2M | | 1 | _ | _ | | | | | |
| 23 | H022604000 | LISTON AMARRE ZOCALO 1 M | | _ | 1 | _ | | | | | |
| 23 | U572653000 | LISTON AMARRE ZOCALO 1 1/2M | | _ | _ | 1 | | | | | |
| | Q419005000 | REMACHE 4x8 ALMG3 / ALUMINIO | | 4 | 4 | 4 | | | | | |
| 24 | H012805000 | ESCUADRA AMARRE PATA | | 2 | 2 | 2 | | | | | |
| | Q162030000 | TUERCA EXAGONAL M5 | | 4 | 4 | 4 | | | | | |
| | Q302022000 | ARANDELA 16x6x1,2 A304 | | 4 | 4 | 4 | | | | | |
| | Q221345000 | REMACHE EXAGONAL M10 | | 2 | 2 | 2 | | | | | |
| | Q221345000 | REMACHE EXAGONAL M10 | | 4 | 4 | 4 | | | | | |
| 25 | R062810000 | LATERAL DCHO. COMPLETO | | 1 | 1 | 1 | | | | | |
| | Q221342000 | REMACHE EXAGONAL M5 | | 2 | 2 | 2 | | | | | |
| | Q221342000 | REMACHE EXAGONAL M5 | | 3 | 3 | 3 | | | | | |
| | Q221343000 | REMACHE EXAGONAL M6 | | 4 | 4 | 4 | | | | | |
| 26 | U022603000 | LISTON AMARRE QUEMADOR | | 1 | 2 | 3 | | | | | |
| | Q419005000 | REMACHE 4x8 ALMG3 / ALUMINIO | | 4 | 8 | 12 | | | | | |
| | Q221343000 | REMACHE EXAGONAL M6 | | 2 | 4 | 6 | | | | | |
| 27 | U542651000 | SUPLEMEN. BASE BANDEJA 0,5 M | | 1 | _ | _ | | | | | |
| 27 | U562652000 | SUPLEMEN. BASE BANDEJA 1 M | | _ | 1 | _ | | | | | |
| 27 | U582654000 | SUPLEMEN. BASE BANDEJA 1,5 M | | _ | _ | 1 | | | | | |
| | Q419005000 | REMACHE 4x8 ALMG3 / ALUMINIO | | _ | 3 | 4 | | | | | |
| | Q152004000 | TORNIL, APLASTADO M5x13 A304 | | 2 | 2 | 2 | | | | | |
| 28 | H012606000 | REFUERZO POSTER. PATA 0,5 M | | 1 | _ | _ | | | | | |
| 28 | H022606000 | REFUERZO POSTER. PATA 1 M | | _ | 1 | _ | | | | | |
| 28 | U572652000 | REFUERZO POSTER. PATA 1,5 M | | _ | _ | 1 | | | | | |
| | Q162030000 | TUERCA EXAGONAL M5 | | 2 | 2 | 4 | | | | | |
| | Q302022000 | ARANDELA 16x6x1,2 A304 | | 2 | 2 | 4 | | | | | |
| | Q221345000 | REMACHE EXAGONAL M10 | | 2 | 2 | 2 | | | | | |
| | | | | | | | | | | | |
| | | | | | | | | | | | |
| | | | | | | | | | | | |
| | | | | | | | | | | | |

| MOD. | COCINAS | ZONA | MUEBLE | PLANO | C-1663 |
|---|---|---|---|---|---|

| ITEM | CODIGO | DENOMINACION | TEXTO | CG9-20 | CG9-40 | CG9-60 | | | | | NOTAS |
|---|---|---|---|---|---|---|---|---|---|---|---|
| 29 | H012603000 | REFUERZO POS. BASE BANDEJAS | | 1 | _ | _ | | | | | |
| 29 | H022603000 | REFUERZO POS. BASE BANDEJAS | | _ | 1 | _ | | | | | |
| 29 | U082601000 | REFUERZO POS. BASE BANDEJAS | | _ | _ | 1 | | | | | |
| | Q419005000 | REMACHE 4x8 ALMG3 / ALUMINIO | | _ | 3 | 4 | | | | | |
| | Q162030000 | TUERCA EXAGONAL M5 | | 2 | 2 | _ | | | | | |
| | Q302022000 | ARANDELA 16x6x1,2 A304 | | 2 | 2 | _ | | | | | |
| 30 | X010503000 | CIERRE MUELLE | | 3 | 4 | 5 | | | | | |
| | Q419007000 | REMACHE TUBULAR C/V Ø2x6 | | 6 | 8 | 10 | | | | | |

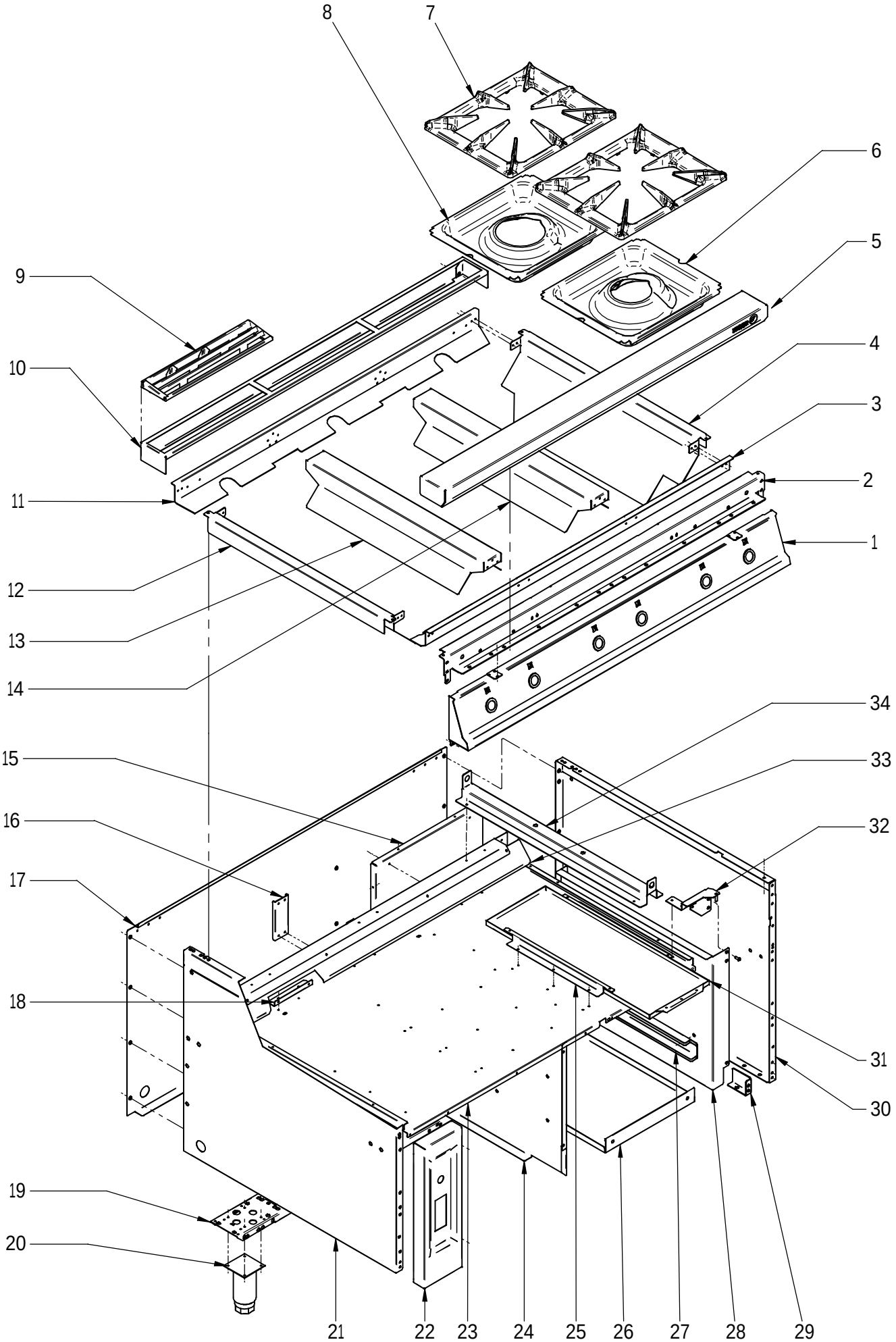


| N plano | Firma | Fecha | Aparato | MUEBLE | Lamina | |
|---|---|---|---|---|---|---|
| C-1664 | | 2006-10 | COCINAS CG9-41, 61, 82 | | 2 | Fagor Industrial S.Coop. FAGOR Oñate |

| MOD. | COCINAS | ZONA | MUEBLE | PLANO | C-1664 |
|---|---|---|---|---|---|

| ITEM | CODIGO | DENOMINACION | TEXTO | CG9-41 | CG9-61 | CG9-82 | | | | | NOTAS |
|---|---|---|---|---|---|---|---|---|---|---|---|
| 1 | U022801000 | PORTAMANDOS COMPL. CG9-41 | | 1 | _ | _ | | | | | |
| 1 | U032801000 | PORTAMANDOS COMPL. CG9-61 | | _ | 1 | _ | | | | | |
| 1 | U122801000 | PORTAMANDOS COMPL. CG9-82 | | _ | _ | 1 | | | | | |
| | Q152004000 | TORNIL, APLASTADO M5x13 A304 | | 2 | 2 | 2 | | | | | |
| 2 | U022605000 | ESCUADRA INT. ANTER. MESA 1M | | 1 | _ | 2 | | | | | |
| | U032611000 | ESCUADRA INT. ANT. MESA 1,5M | | _ | 1 | _ | | | | | |
| | Q221342000 | REMACHE EXAGONAL M5 | | 2 | 2 | 4 | | | | | |
| | Q152004000 | TORNIL, APLASTADO M5x13 A304 | | 6 | 6 | 12 | | | | | |
| | Q221343000 | REMACHE EXAGONAL M6 | | 2 | 3 | 4 | | | | | |
| | Q302022000 | ARANDELA 16x6x1,2 A304 | | 4 | 6 | 8 | | | | | |
| 3 | U025410000 | ANTERIOR INTERIOR MESA 1M | | 1 | _ | 2 | | | | | |
| 3 | U035401000 | ANTERIOR INTERIOR MESA 1,5 | | _ | 1 | _ | | | | | |
| | Q419005000 | REMACHE 4x8 ALMG3 / ALUMINIO | | 8 | 10 | 16 | | | | | |
| 4 | U565450000 | LATERAL DERECHO DE MESA | | 1 | 1 | 1 | | | | | |
| | Q152004000 | TORNIL, APLASTADO M5x13 A304 | | 2 | 2 | 2 | | | | | |
| 5 | U025415000 | ANTERIOR MESA 1 M | | 1 | _ | _ | | | | | |
| 5 | U035406000 | ANTERIOR MESA 1 ,5 | | _ | 1 | _ | | | | | |
| 5 | U125401000 | ANTERIOR MESA 2 M | | _ | _ | 1 | | | | | |
| | Q152004000 | TORNIL, APLASTADO M5x13 A304 | | 2 | 3 | 4 | | | | | |
| | Q302022000 | ARANDELA 16x6x1,2 A304 | | 2 | 3 | 4 | | | | | |
| 6 | U025404000 | VERTEDERO QUEMADOR 4000 | | 2 | 3 | 4 | | | | | |
| 7 | U025411000 | PARRILLA GAMA 900 | | 4 | 6 | 8 | | | | | |
| 8 | U025405000 | VERTEDERO QUEMADOR 8000 | | 2 | 3 | 4 | | | | | |
| S/N | U595461000 | UNION CENTRAL DE COCINA | | _ | _ | 1 | | | | | |
| | Q152004000 | TORNIL, APLASTADO M5x13 A304 | | _ | _ | 4 | | | | | |
| 9 | R205425000 | EMBELLECEDOR ESMALTE | | 2 | 3 | 4 | | | | | |
| 10 | R205428000 | SOPORTE EMBELLECEDOR 1 M | | 1 | _ | 2 | | | | | |
| 10 | R205430000 | SOPORTE EMBELLECEDOR 1,5 | | _ | 1 | _ | | | | | |
| | Q412000000 | REMACHE TUBULAR 4x8 | | 2 | 2 | 2 | | | | | |
| 11 | U025409000 | POSTER INTERIOR DE MESA 1 M | | 1 | _ | 2 | | | | | |
| 11 | U035400000 | POSTER INTERIOR DE MESA1,5M | | _ | 1 | _ | | | | | |

| MOD. | COCINAS | ZONA | MUEBLE | PLANO | C-1664 |
|---|---|---|---|---|---|

| ITEM | CODIGO | DENOMINACION | TEXTO | CG9-41 | CG9-61 | CG9-82 | | | | | NOTAS |
|---|---|---|---|---|---|---|---|---|---|---|---|
| 12 | U025408000 | LATERAL IZQUIERDO DE MESA | | 1 | 1 | 1 | | | | | |
| | Q152004000 | TORNIL, APLASTADO M5x13 A304 | | 2 | 2 | 2 | | | | | |
| 13 | U565454000 | CENTRAL DE MESA | | 1 | 1 | 2 | | | | | |
| 14 | U585454000 | CENTRAL DE MESA DERECHA | | _ | 1 | _ | | | | | |
| | Q419005000 | REMACHE 4x8 ALMG3 / ALUMINIO | | 6 | 12 | 12 | | | | | |
| 15 | U032605000 | PANEL INTERIOR POSTERIOR | | _ | 1 | _ | | | | | |
| | Q419005000 | REMACHE 4x8 ALMG3 / ALUMINIO | | _ | 5 | _ | | | | | |
| 16 | U022604000 | SOPORTE CENTRAL DE MESA | | 1 | 2 | 2 | | | | | |
| | Q419005000 | REMACHE 4x8 ALMG3 / ALUMINIO | | 4 | 8 | 8 | | | | | |
| 17 | U562853000 | PANEL POSTERIOR 1 M | | 1 | _ | _ | | | | | |
| 17 | U582852000 | PANEL POSTERIOR 1,5 M | | _ | 1 | _ | | | | | |
| 17 | U592852000 | PANEL POSTERIOR 2 M | | _ | _ | 1 | | | | | |
| | Q419005000 | REMACHE 4x8 ALMG3 / ALUMINIO | | 8 | 8 | 16 | | | | | |
| 18 | U325611000 | ESCUADRA GUIA SOP. BANDEJAS | | 2 | 3 | 4 | | | | | |
| | Q419005000 | REMACHE 4x8 ALMG3 / ALUMINIO | | 4 | 6 | 8 | | | | | |
| | Q151336000 | TORNILO SOPORTE GUIAS | | 4 | 6 | 8 | | | | | |
| 19 | U022607000 | LISTON SOPORTE PATAS 1 M | | 2 | _ | _ | | | | | |
| 19 | U032609000 | LISTON SOPORTE PATAS 1,5 M | | _ | 2 | _ | | | | | |
| 19 | U122605000 | LISTON SOPORTE PATAS 2 M | | _ | _ | 2 | | | | | |
| | Q221342000 | REMACHE EXAGONAL M5 | | _ | 1 | _ | | | | | |
| | Q012043000 | TORNILLO EXAGONAL M6x20 A304 | | 4 | 4 | 8 | | | | | |
| | Q302022000 | ARANDELA 16x6x1,2 A304 | | 4 | 4 | 8 | | | | | |
| 20 | X260151000 | PATA REGULABLE | | 4 | 4 | 4 | | | | | |
| | Q411304000 | REMACHE AVIBULB Ø 4,8 | | 16 | 16 | 16 | | | | | |
| 21 | X162813000 | PANEL LATERAL IZQUIERDO G900 | | 1 | 1 | 2 | | | | | |
| | Q221343000 | REMACHE EXAGONAL M6 | | 9 | 9 | 14 | | | | | |
| | Q221342000 | REMACHE EXAGONAL M5 | | 6 | 6 | 6 | | | | | |
| | Q012043000 | TORNILLO EXAGONAL M6x20 A304 | | 4 | 4 | 8 | | | | | |
| | Q302022000 | ARANDELA 16x6x1,2 A304 | | 4 | 4 | 8 | | | | | |
| | Q152004000 | TORNILLO APLASTADO M5x13 A304 | | 2 | 2 | 4 | | | | | |
| | | | | | | | | | | | |

| MOD. | COCINAS | ZONA | MUEBLE | PLANO | C-1664 |
|---|---|---|---|---|---|

| ITEM | CODIGO | DENOMINACION | TEXTO | CG9-41 | CG9-61 | CG9-82 | | | | | NOTAS |
|---|---|---|---|---|---|---|---|---|---|---|---|
| 22 | U022808000 | PORTAMANDOS LATERAL HORNO | | 1 | 1 | 2 | | | | | |
| | Q152004000 | TORNIL, APLASTADO M5x13 A304 | | 2 | 2 | 4 | | | | | |
| 23 | U022602000 | BASE BANDEJAS 1 M | | 1 | _ | | | | | | |
| 23 | U032602000 | BASE BANDEJAS 1,5 M | | _ | 1 | 2 | | | | | |
| | Q152004000 | TORNIL, APLASTADO M5x13 A304 | | 4 | 6 | 8 | | | | | |
| | Q419005000 | REMACHE 4x8 ALMG3 / ALUMINIO | | 3 | 3 | 6 | | | | | |
| 24 | U032603000 | PANEL LATERAL INTERIOR IZDO. | | _ | 1 | _ | | | | | |
| | Q419005000 | REMACHE 4x8 ALMG3 / ALUMINIO | | _ | 2 | _ | | | | | |
| | Q221342000 | REMACHE EXAGONAL M5 | | _ | 2 | _ | | | | | |
| | Q152004000 | TORNIL, APLASTADO M5x13 A304 | | _ | 2 | _ | | | | | |
| 25 | U562640000 | GUIA CENTRAL BANDEJAS | | 4 | 6 | 8 | | | | | |
| | Q419005000 | REMACHE 4x8 ALMG3 / ALUMINIO | | 12 | 16 | 24 | | | | | |
| | Q419005000 | REMACHE 4x8 ALMG3 / ALUMINIO | | _ | 1 | _ | | | | | |
| 26 | U032606000 | BASE INTERIOR LATERAL | | _ | 1 | _ | | | | | |
| | Q419005000 | REMACHE 4x8 ALMG3 / ALUMINIO | | _ | 4 | _ | | | | | |
| 27 | U582665000 | CONJUNTO GUIAS CG9-61 | | _ | 4 | _ | | | | | |
| | Q152004000 | TORNIL, APLASTADO M5x13 A304 | | _ | 6 | _ | | | | | |
| 28 | U032604000 | LATERAL INTERIOR DERECHO | | _ | 1 | _ | | | | | |
| | Q419005000 | REMACHE 4x8 ALMG3 / ALUMINIO | | _ | 2 | _ | | | | | |
| | Q221342000 | REMACHE EXAGONAL M5 | | _ | 2 | _ | | | | | |
| | Q221342000 | REMACHE EXAGONAL M5 | | _ | 6 | _ | | | | | |
| | Q152004000 | TORNIL, APLASTADO M5x13 A304 | | _ | 2 | _ | | | | | |
| 29 | U020526000 | ESCUAD. REFUERZO BISAG DCHA | | _ | 1 | _ | | | | | |
| | Q152004000 | TORNIL, APLASTADO M5x13 A304 | | _ | 2 | _ | | | | | |
| 30 | U022819000 | PANEL LATERAL DERECHO G9-00 | | 1 | _ | 2 | | | | | |
| 30 | X162814000 | PANEL LATERAL DERECHO G9-00 | | _ | 1 | _ | | | | | |
| | Q221343000 | REMACHE EXAGONAL M6 | | 9 | 9 | 13 | | | | | |
| | Q221342000 | REMACHE EXAGONAL M5 | | 6 | 10 | 6 | | | | | |
| | Q012043000 | TORNILLO EXAGONAL M6x20 A304 | | 4 | 4 | 8 | | | | | |
| | Q302022000 | ARANDELA 16x6x1,2 A304 | | 4 | 4 | 8 | | | | | |
| | Q152004000 | TORNIL, APLASTADO M5x13 A304 | | 2 | 2 | 4 | | | | | |

| MOD. | COCINAS | ZONA | MUEBLE | PLANO | C-1664 |
|---|---|---|---|---|---|

| ITEM | CODIGO | DENOMINACION | TEXTO | CG9-41 | CG9-61 | CG9-82 | | | | | NOTAS |
|---|---|---|---|---|---|---|---|---|---|---|---|
| 31 | U022608000 | BANDEJA RECOGEGRASAS 1/2M | | 2 | 3 | 4 | | | | | |
| 32 | U032608000 | BISAGRA SUPERIOR DERECHA | | _ | 1 | _ | | | | | |
| | Q152004000 | TORNIL, APLASTADO M5x13 A304 | | _ | 2 | _ | | | | | |
| | Q419005000 | REMACHE 4x8 ALMG3 / ALUMINIO | | _ | 3 | _ | | | | | |
| 33 | U562652000 | SUPLEMENTO BASE BANDEJAS | | 1 | _ | 2 | | | | | |
| 33 | U582654000 | SUPLEMENTO BASE BANDEJAS | | _ | 1 | _ | | | | | |
| | Q419005000 | REMACHE 4x8 ALMG3 / ALUMINIO | | 3 | 4 | 6 | | | | | |
| 34 | U022603000 | LISTON AMARRE QUEMADOR | | 2 | 3 | 4 | | | | | |
| | Q419005000 | REMACHE 4x8 ALMG3 / ALUMINIO | | 4 | 6 | 8 | | | | | |
| | Q221342000 | REMACHE EXAGONAL M5 | | _ | 6 | _ | | | | | |
| | Q221343000 | REMACHE EXAGONAL M6 | | 2 | 6 | 4 | | | | | |

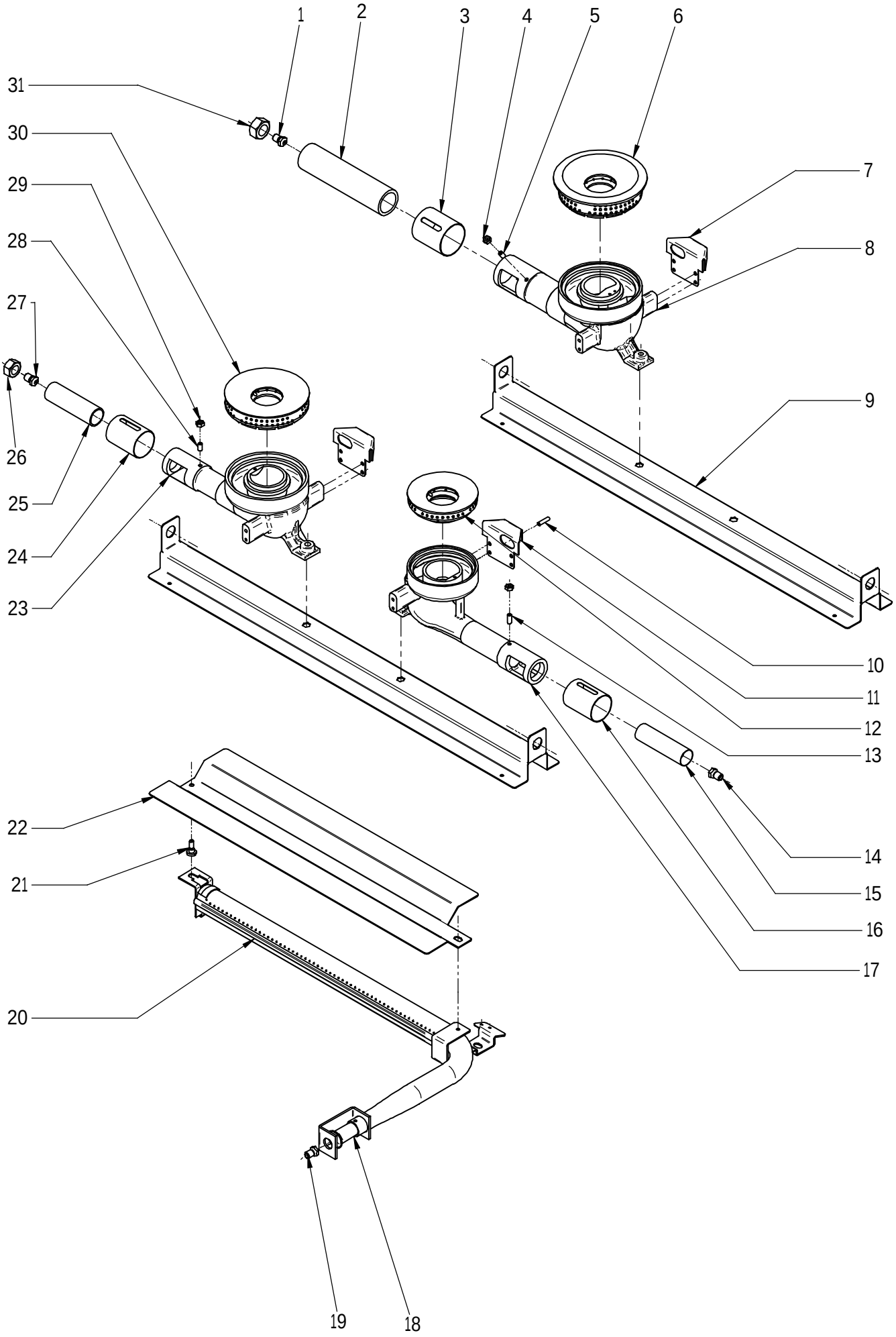


| N plano | Firma | Fecha | Aparato | QUEMADORES | Lamina | |
|---|---|---|---|---|---|---|
| C-1665 | | 2006-10 | COCINA CG9-20, 40, 60, 41, 61,82 | | 3 | Fagor Industrial S.Coop. FAGOR<br>Oñate |

| MOD. | COCINAS | ZONA | QUEMADORES | PLANO | C-1665 |
|---|---|---|---|---|---|

| ITEM | CODIGO | DENOMINACION | TEXTO | CG9-20 | CG9-40 | CG9-60 | CG9-41 | CG9-61 | CG9-82 | | NOTAS |
|---|---|---|---|---|---|---|---|---|---|---|---|
| 1 | U112401000 | TOBERA Ø 1,55 BP (10500) | | _ | 1 | 1 | 1 | 1 | 2 | | |
| 1 | R275050000 | TOBERA Ø 2,35 GN (10500) | | _ | 1 | 1 | 1 | 1 | 2 | | |
| 1 | U192402000 | TOBERA Ø 4,90 GV (10500) | | _ | 1 | 1 | 1 | 1 | 2 | | |
| 2 | U235702000 | VENTURI 10.500 | | _ | 1 | 1 | 1 | 1 | 2 | | |
| 3 | U025706000 | REGULADOR DE AIRE 10.000 | | _ | 1 | 1 | 1 | 1 | 2 | | |
| 4 | Q162004000 | TUERCA EXAGONAL M6 | | _ | 1 | 1 | 1 | 1 | 2 | | |
| | Q012043000 | TORNILLO EXAGONAL M6x20 A304 | | _ | 1 | 1 | 1 | 1 | 2 | | |
| | Q302022000 | ARANDELA 16x6x1,2 A304 | | _ | 1 | 1 | 1 | 1 | 2 | | |
| 5 | Q132054000 | VARILLA ROSCADA M6x12 | | _ | 1 | 1 | 1 | 1 | 2 | | |
| 6 | U235701500 | DIFUSOR 10.500 Kcal/H | | _ | 1 | 1 | 1 | 1 | 2 | | |
| 7 | U025708000 | PROTECTOR PILOTO POSTERIOR | | 1 | 2 | 3 | 2 | 3 | 4 | | |
| 8 | U025703000 | CUERPO QUEMADOR 10.000Kcal/H | | _ | 1 | 1 | 1 | 1 | 2 | | |
| | Q371028000 | MANGUITO DE SUJECION Ø 3x14 | | _ | 2 | 2 | 2 | 2 | 4 | | |
| 9 | U022603000 | LISTON AMARRE QUEMADOR | | 1 | 2 | 3 | 2 | 3 | 4 | | |
| 10 | Q372004000 | PASADOR ELASTICO 5x20 | | 2 | 4 | 6 | 4 | 6 | 8 | | |
| | Q152004000 | TORNIL. APLASTADO M5x13 A304 | | _ | _ | _ | _ | 6 | 8 | | |
| 11 | U025707000 | PROTECTOR PILOTO ANTERIOR | | 1 | 2 | 3 | 2 | 3 | 4 | | |
| 12 | U445731500 | QUEMADOR 4000 (00545-010) | | 1 | 2 | 3 | 2 | 3 | 4 | | |
| 13 | Q131542000 | VARILLA ROSCADA M6 x 15 | | 1 | 2 | 3 | 2 | 3 | 4 | | |
| | Q162004000 | TUERCA EXAGONAL M6 | | 1 | 2 | 3 | 2 | 3 | 4 | | |
| | Q012045000 | TORNILLO EXAGONAL M6x30 A304 | | 1 | 2 | 3 | 2 | 3 | 4 | | |
| | Q302022000 | ARANDELA 16x6x1,2 A304 | | 1 | 2 | 3 | 2 | 3 | 4 | | |
| 14 | U122407000 | TOBERA Ø 1,05 BP (4000) | | 1 | 2 | 3 | 2 | 3 | 4 | | |
| 14 | 9105100000 | TOBERA Ø 1,50 GN (4000) | | 1 | 2 | 3 | 2 | 3 | 4 | | |
| 14 | R302401000 | TOBERA Ø 2,90 GV (4000) | | 1 | 2 | 3 | 2 | 3 | 4 | | |
| 15 | U125720000 | VENTURI QUEMADOR 4000 kcl | | 1 | 2 | 3 | 2 | 3 | 4 | | |
| 16 | U265702000 | REGULADOR AIRE | | 1 | 2 | 3 | 2 | 3 | 4 | | |
| 17 | U025701000 | CUERPO QUEMADOR 4000Kcal/H | | 1 | 2 | 3 | 2 | 3 | 4 | | |
| | Q371026000 | MANGUITO DE SUJECION Ø 4x14 | | 1 | 2 | 3 | 2 | 3 | 4 | | |
| 18 | U325707000 | REGULADOR DE AIRE HORNO | | _ | _ | _ | 1 | 1 | 2 | | |
| | Q012031000 | TORNILLO EXAGONAL M5x10 A304 | | _ | _ | _ | 1 | 1 | 2 | | |

| MOD. | COCINAS | ZONA | QUEMADORES | PLANO | C-1665 |
|---|---|---|---|---|---|

| ITEM | CODIGO | DENOMINACION | TEXTO | CG9-20 | CG9-40 | CG9-60 | CG9-41 | CG9-61 | CG9-82 | | NOTAS |
|---|---|---|---|---|---|---|---|---|---|---|---|
| 19 | U052401000 | TOBERA Ø 1,45 BP (QUE. HORNO) | | _ | _ | _ | 1 | 1 | 2 | | C-1665 |
| 19 | 1011600000 | TOBERA Ø 2,25 GN (QUE. HORNO) | | _ | _ | _ | 1 | 1 | 2 | | C-1665 |
| 19 | 9426000000 | TOBERA Ø 4,23 GV (QUE. HORNO) | | _ | _ | _ | 1 | 1 | 2 | | C-1665 |
| 20 | U745700000 | QUEMADOR HORNO | | _ | _ | _ | 1 | 1 | 2 | | |
| | Q012043000 | TORNILLO EXAGONAL M6x20 A304 | | _ | _ | _ | 1 | 1 | 2 | | |
| | Q302022000 | ARANDELA 16x6x1,2 A304 | | _ | _ | _ | 1 | 1 | 2 | | |
| | Q012031000 | TORNILLO EXAGONAL M5x10 A304 | | _ | _ | _ | 1 | 1 | 2 | | |
| | Q302022000 | ARANDELA 16x6x1,2 A304 | | _ | _ | _ | 1 | 1 | 2 | | |
| 21 | R252624000 | PITON SOPORTE | | _ | _ | _ | 1 | 1 | 2 | | |
| | Q162004000 | TUERCA EXAGONAL M6 | | _ | _ | _ | 1 | 1 | 2 | | |
| | Q302022000 | ARANDELA 16x6x1,2 A304 | | _ | _ | _ | 2 | 2 | 4 | | |
| | Q012031000 | TORNILLO EXAGONAL M5x10 A304 | | _ | _ | _ | 1 | 1 | 2 | | |
| 22 | U745705000 | DIFUSOR QUEMADOR HORNO | | _ | _ | _ | 1 | 1 | 2 | | |
| | Q302022000 | ARANDELA 16x6x1,2 A304 | | _ | _ | _ | 1 | 1 | 2 | | |
| | Q012041000 | TORNILLO EXAGONAL M6x10 A304 | | _ | _ | _ | 1 | 1 | 2 | | |
| 23 | U025702000 | CUERPO QUEMADOR 8000 Kcal/H | | 1 | 1 | 2 | 1 | 2 | 2 | | |
| 24 | U265702000 | REGULADOR AIRE | | 1 | 1 | 2 | 1 | 2 | 2 | | |
| 25 | U565700000 | VENTURI QUEMADOR 8000 | | 1 | 1 | 2 | 1 | 2 | 2 | | |
| 26 | U565011000 | TUERCA GUIA | | 2 | 3 | 5 | 3 | 5 | 6 | | PARA QUEMAD. DE 8.000 Y 4000 |
| 27 | O631000000 | TOBERA Ø 1,40 BP (8000) | | 1 | 1 | 2 | 1 | 2 | 2 | | |
| 27 | R614500000 | TOBERA Ø 2 GN (8000) | | 1 | 1 | 2 | 1 | 2 | 2 | | |
| 27 | U262401000 | TOBERA Ø 4,10 GV (8000) | | 1 | 1 | 2 | 1 | 2 | 2 | | C-1665 |
| 28 | Q132054000 | VARILLA ROSCADA M6 x 12 | | 1 | 1 | 2 | 1 | 2 | 2 | | |
| 29 | Q162004000 | TUERCA EXAGONAL M6 | | 1 | 1 | 2 | 1 | 2 | 2 | | |
| | Q012043000 | TORNILLO EXAGONAL M6x20 A304 | | 1 | 1 | 2 | 1 | 2 | 2 | | |
| | Q302022000 | ARANDELA 16x6x1,2 A304 | | 1 | 1 | 2 | 1 | 2 | 2 | | |
| 30 | U135702500 | QUEMADOR 8000 | | 1 | 1 | 2 | 1 | 2 | 2 | | |
| | Q371026000 | MANGUITO DE SUJECION Ø 4x14 | | 1 | 1 | 2 | 1 | 2 | 2 | | |
| 31 | U235703000 | TUERCA GUIA 10.500 | | _ | 1 | 1 | 1 | 1 | 2 | | PARA QUEMADOR DE 10.500KCL/H |
| | | | | | | | | | | | |
| | | | | | | | | | | | |

N.plano
C-1666

Firma

Fecha
2006-10

Aparato
COCINAS CG9-20, 40, 60

PARTE FUNCIONAL A GAS

Lamina
4

Fagor Industrial S.Coop.
Onate

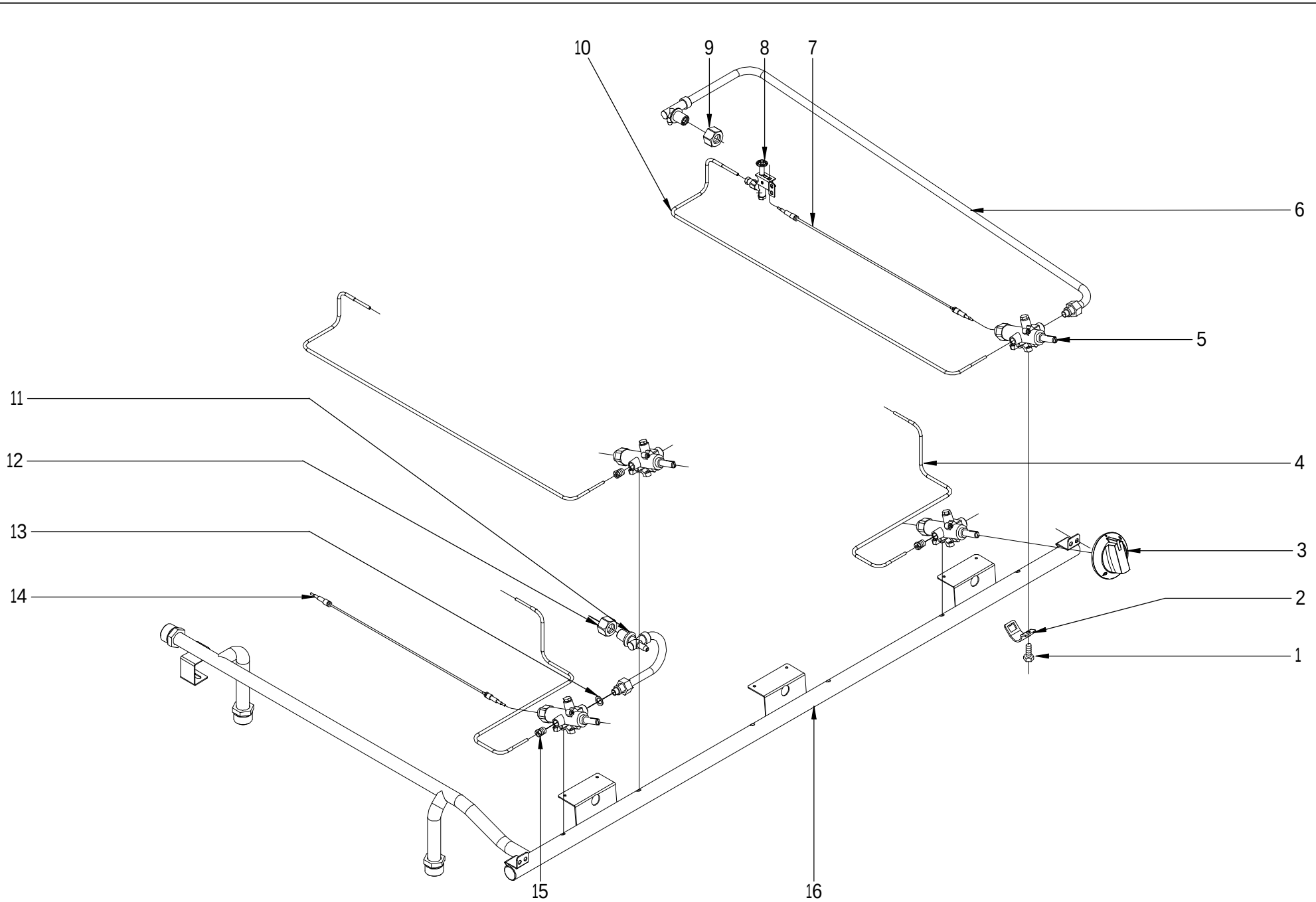

| MOD. | COCINAS | ZONA | PARTE FUNCIONAL GAS | PLANO | C-1666 |
|---|---|---|---|---|---|

| ITEM | CODIGO | DENOMINACION | TEXTO | CG9-20 | CG9-40 | CG9-60 | | | | | NOTAS |
|---|---|---|---|---|---|---|---|---|---|---|---|
| 1 | Q122032000 | TORNILLO ALLEN M5x15 | | 2 | 4 | 6 | | | | | |
| 2 | U022102000 | BRIDA AMARRE GRIFO | | 2 | 4 | 6 | | | | | |
| 3 | U022105000 | MANDO MONT. COCINA GAS Ø10 | | 2 | 4 | 6 | | | | | |
| 4 | U025012000 | TUBO PILOTO ANTERIOR-IZDO | | 1 | 2 | 3 | | | | | |
| 5 | U022101000 | GRIFO CAL 3200-MIN 0.55 | | 2 | 4 | 6 | | | | | |
| | U022111000 | BY-PASS 0,90 GRIFO CAL.3200 | | 1 | 1 | 2 | | | | | PARA QUEMADOR DE 8.000KCL/H |
| | U022113000 | BY-PASS 1,30 GRIFO CAL.3200 | | _ | 2 | 3 | | | | | PARA QUEMADOR DE 10.000KCL/H |
| 6 | U025009000 | TUBO VALV- QUEMA. POSTERIOR | | 1 | 2 | 3 | | | | | |
| | Q153002000 | TORNILLO TAPON | | 1 | 2 | 2 | | | | | |
| 7 | U262130000 | TERMOPAR L=1000 | | 1 | 2 | 3 | | | | | |
| 8 | U442134000 | CONJUNTO PILOTO | | 2 | 4 | 6 | | | | | |
| | U442138000 | INYECTOR Ø 0,25 BP Y GV | | 2 | 4 | 6 | | | | | |
| | U442137000 | INYECTOR Ø 0,4 GN | | 2 | 4 | 6 | | | | | |
| 9 | U235703000 | TUERCA GUIA 10.500 | | _ | 1 | 1 | | | | | PARA QUEMADOR DE 10.500KCL/H |
| 10 | U025013000 | TUBO PILOTO POSTERIOR-IZDO | | 1 | 2 | 3 | | | | | |
| 11 | U025011000 | TUB VALV-QUEMADOR ANTERIOR | | 1 | 2 | 3 | | | | | |
| | Q153002000 | TORNILLO TAPON | | 1 | 2 | 3 | | | | | |
| 12 | U565011000 | TUERCA GUIA | | 2 | 3 | 5 | | | | | PARA QUEMAD. DE 8.000 Y 4000 |
| 13 | Q306055000 | ARANDELA Ø16x10,3x1 | | 1 | 2 | 3 | | | | | |
| 14 | U222130000 | TERMOPAR L=600 | | 1 | 2 | 3 | | | | | |
| 15 | U134323000 | RACOR BICONO 6 958 031 | | 2 | 4 | 6 | | | | | |
| | U265026000 | BICONO Ø4 | | 2 | 4 | 6 | | | | | |
| 16 | U015006000 | DISTRIBUIDOR COMPL. CG9-20 | | 1 | _ | _ | | | | | |
| 16 | U025018000 | DISTRIBUIDOR COMPL. CG9-40 | | _ | 1 | _ | | | | | |
| 16 | U075001000 | DISTRIBUIDOR COMPL. CG9-60 | | _ | _ | 1 | | | | | |
| | Q221342000 | REMACHE EXAGONAL M5 | | 2 | 2 | 2 | | | | | |
| | Q152004000 | TORNIL. APLASTADO M5x13 A304 | | 2 | 2 | 2 | | | | | |
| | | | | | | | | | | | |
| | | | | | | | | | | | |
| | | | | | | | | | | | |
| | | | | | | | | | | | |

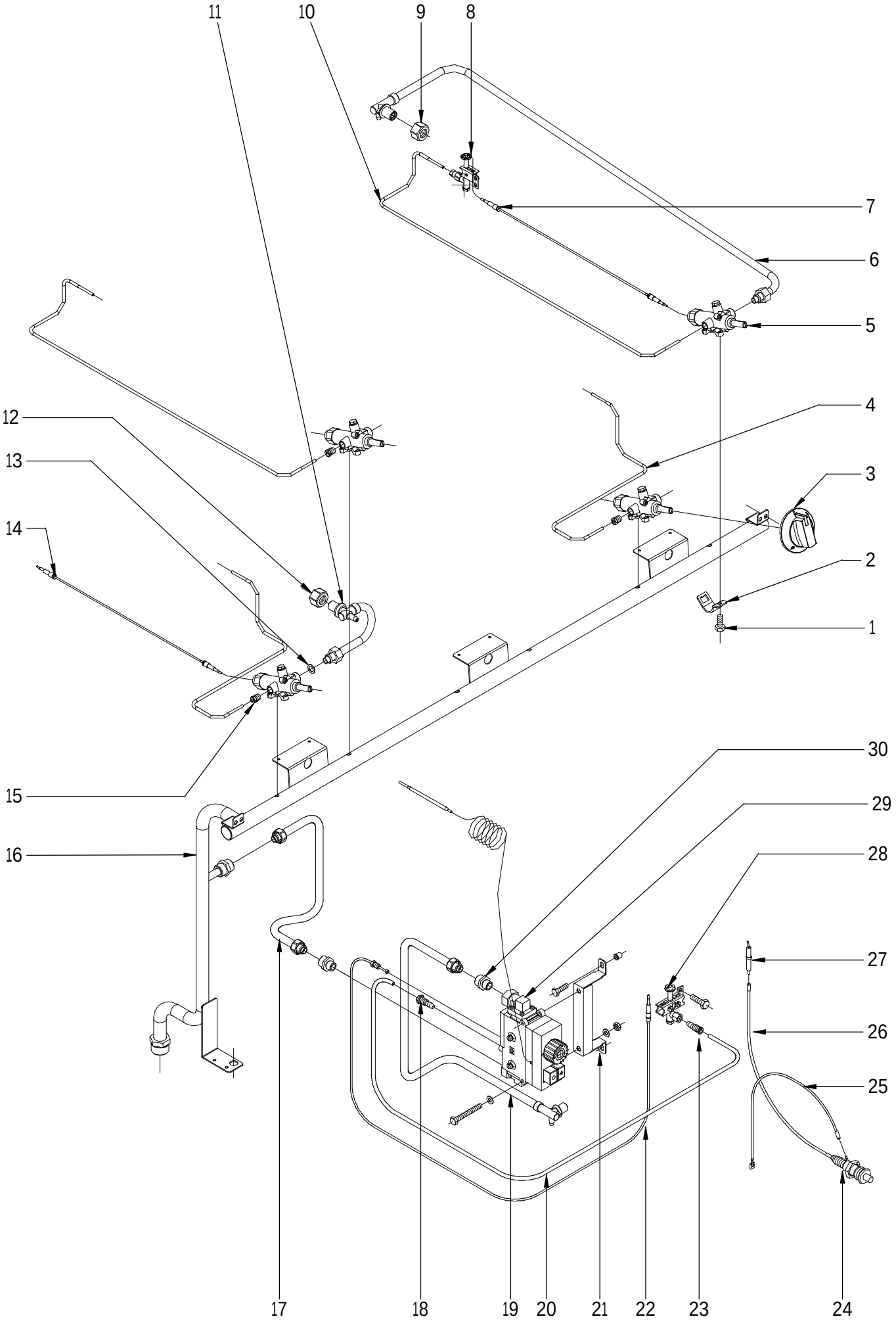


| N plano | Firma | Fecha | Aparato | | Lamina | |
|---|---|---|---|---|---|---|
| C-1667 | | 2006-10 | PARTE FUNCIONAL GAS<br>COCINAS CG9-41, 61, 82 | | 5 | Fagor Industrial S.Coop. FAGOR<br>Oñate |

| MOD. | COCINAS | ZONA | PARTE FUNCIONAL GAS | PLANO | C-1667 |
|---|---|---|---|---|---|

| ITEM | CODIGO | DENOMINACION | TEXTO | CG9-41 | CG9-61 | CG9-82 | | | | | NOTAS |
|---|---|---|---|---|---|---|---|---|---|---|---|
| 1 | Q122032000 | TORNILLO ALLEN M5x15 | | 4 | 6 | 8 | | | | | |
| 2 | U022102000 | BRIDA AMARRE GRIFO | | 4 | 6 | 8 | | | | | |
| 3 | U022105000 | MANDO MONT. COCINA GAS Ø10 | | 4 | 6 | 8 | | | | | |
| 4 | U025012000 | TUBO PILOTO ANTERIOR-IZDO | | 2 | 3 | 4 | | | | | |
| 5 | U022101000 | GRIFO CAL 3200-MIN 0.55 | | 4 | 6 | 8 | | | | | |
| | U022111000 | BY-PASS 0,90 GRIFO CAL.3200 | | 1 | 2 | 2 | | | | | PARA QUEMADOR DE 8.000KCL/H |
| | U022113000 | BY-PASS 1,30 GRIFO CAL.3200 | | 1 | 1 | 2 | | | | | PARA QUEMADOR DE 10.000KCL/H |
| 6 | U025009000 | TUBO VALV- QUEMA. POSTERIOR | | 2 | 3 | 4 | | | | | |
| | Q153002000 | TORNILLO TAPON | | 2 | 2 | 4 | | | | | |
| 7 | U262130000 | TERMOPAR L=1000 | | 2 | 3 | 4 | | | | | |
| 8 | U442134000 | CONJUNTO PILOTO | | 2 | 4 | 6 | | | | | |
| | U442138000 | INYECTOR Ø 0,25 BP Y GV | | 2 | 4 | 6 | | | | | |
| | U442137000 | INYECTOR Ø 0,4 GN | | 2 | 4 | 6 | | | | | |
| 9 | U235703000 | TUERCA GUIA 10.500 | | 1 | 1 | 2 | | | | | PARA QUEMADOR DE 10.500KCL/H |
| 10 | U025013000 | TUBO PILOTO POSTERIOR-IZDO | | 2 | 3 | 4 | | | | | |
| 11 | U025011000 | TUB VALV-QUEMADOR ANTERIOR | | 2 | 3 | 4 | | | | | |
| | Q153002000 | TORNILLO TAPON | | 2 | 3 | 4 | | | | | |
| 12 | U565011000 | TUERCA GUIA | | 3 | 5 | 6 | | | | | PARA QUEMAD. DE 8.000 Y 4000 |
| 13 | Q306055000 | ARANDELA Ø16x10,3x1 | | 2 | 3 | 4 | | | | | |
| 14 | U222130000 | TERMOPAR L=600 | | 2 | 3 | 4 | | | | | |
| 15 | U134323000 | RACOR BICONO 6 958 031 | | 4 | 6 | 8 | | | | | |
| | U265026000 | BICONO Ø4 | | 4 | 6 | 8 | | | | | |
| 16 | U025001000 | DISTRIBUIDOR COMPL. CG9-41 | | 1 | _ | 2 | | | | | |
| 16 | U035001000 | DISTRIBUIDOR COMPL. CG9-61 | | _ | 1 | _ | | | | | |
| | Q221342000 | REMACHE EXAGONAL M5 | | 2 | 2 | 4 | | | | | |
| | Q152004000 | TORNIL. APLASTADO M5x13 A304 | | 2 | 2 | 4 | | | | | |
| | Q411304000 | REMACHE AVIBULBO Ø4,8 | | 2 | 2 | 4 | | | | | |
| 17 | U025014000 | ENTRADA MINISIT COMPLETA | | 1 | 1 | 2 | | | | | |
| | Q306057000 | ARANDELA Ø18x12,5x1,5 | | 1 | 2 | 4 | | | | | |
| 18 | U134323000 | RACORD BICONO 6 958.031 | | 1 | 2 | 2 | | | | | |
| | | | | | | | | | | | |

| MOD. | COCINAS | ZONA | PARTE FUNCIONAL GAS | PLANO | C-1667 |
|---|---|---|---|---|---|

| ITEM | CODIGO | DENOMINACION | TEXTO | CG9-41 | CG9-61 | CG9-82 | | | | | NOTAS |
|---|---|---|---|---|---|---|---|---|---|---|---|
| 19 | U025017000 | TUBO MINISIT QUEMADOR COMP. | | 1 | 1 | 2 | | | | | |
| | Q153002000 | TORNILLO TAPON | | 1 | 1 | 2 | | | | | |
| 20 | U565036000 | TUBO PILOTO HORNO | | 1 | 1 | 2 | | | | | |
| 21 | U565620000 | SOPORTE VALVULA MINISIT | | 1 | 1 | 2 | | | | | |
| | Q011348000 | TOR.EXAGONAL M6x60 H.ZINCADO | | 2 | 2 | 4 | | | | | |
| | Q232040000 | ARANDELA A6 | | 2 | 2 | 4 | | | | | |
| | Q221342000 | REMACHE EXAGONAL M5 | | 4 | 4 | 8 | | | | | |
| | Q012032000 | TORNILLO EXAGONAL M5x15 A304 | | 2 | 2 | 4 | | | | | |
| | Q151301000 | PHILIPS 8x5/8 | | 2 | 2 | 4 | | | | | |
| 22 | U562130000 | TERMOPAR L=850 | | 1 | 1 | 2 | | | | | |
| 23 | U134323000 | RACORD BICONO 6 958.031 | | 1 | 1 | 2 | | | | | |
| 24 | S113034000 | PIEZOELECTRICO | | 1 | 1 | 2 | | | | | |
| 25 | U333003000 | CABLE MASA ENCENDEDOR | | 1 | 1 | 2 | | | | | |
| 26 | U323030000 | CABLE BUJIA | | 1 | 1 | 2 | | | | | |
| 27 | X012101000 | BUJIA 915.037 | | 1 | 1 | 2 | | | | | |
| | Q012031000 | TORNILLO EXAGONAL M5x15 A304 | | 1 | 1 | 2 | | | | | |
| 28 | U322118000 | PILOTO COMPLETO 100.062 | | 1 | 1 | 2 | | | | | |
| | U442138000 | INYECTOR Ø 0,25 BP Y GV | | 1 | 1 | 2 | | | | | |
| | U442137000 | INYECTOR Ø 0,4 GN | | 1 | 1 | 2 | | | | | |
| 29 | U134324000 | VALVULA MINISIT 0710.654 | | 1 | 1 | 2 | | | | | |
| | Q307041000 | JUNTA TORICA 25,4x20,2x2,6 | | 2 | 2 | 4 | | | | | |
| | U134317000 | MANDO NEGRO MINI 916.124 | | 1 | 1 | 2 | | | | | |
| | U134318000 | CUBIERTA MINISIT 903.052 | | 1 | 1 | 2 | | | | | |
| | Q031322000 | TORNILLO ALOMADO M4x15 | | 8 | 8 | 16 | | | | | |
| | U264300000 | RACOR 3/8 906,252 | | 2 | 2 | 4 | | | | | |
| 30 | U202103000 | MANGUITO REDUCCION 1/2-3/8" | | 2 | 2 | 4 | | | | | |
| | | | | | | | | | | | |
| | | | | | | | | | | | |
| | | | | | | | | | | | |
| | | | | | | | | | | | |
| | | | | | | | | | | | |

N.plano
C-1668

Firma

Fecha
2006-10

Aparato
COCINAS CG9-41, 61, 82

HORNO

Lamina
6

Fagor Industrial S.Coop.
Oñate

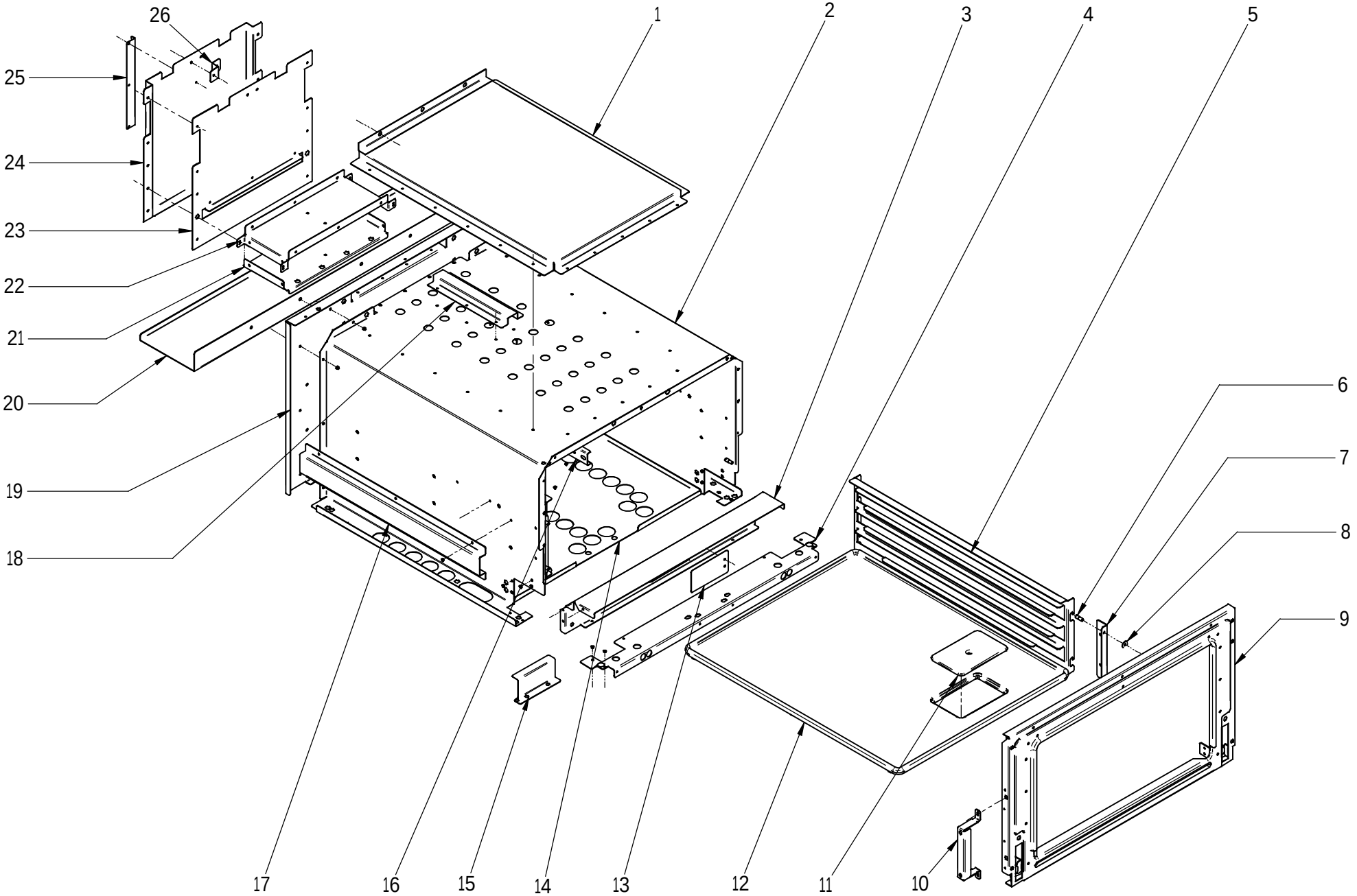

| MOD. | COCINAS | ZONA | HORNO | PLANO | C-1668 |
|---|---|---|---|---|---|

| ITEM | CODIGO | DENOMINACION | TEXTO | CG9-41 | CG9-61 | CG9-82 | | | | | NOTAS |
|---|---|---|---|---|---|---|---|---|---|---|---|
| 1 | U745604000 | CAMARA DE HUMOS | | 1 | 1 | 2 | | | | | |
| S/N | U745614000 | REFUERZO CAMARA DE HUMOS | | 1 | 1 | 2 | | | | | |
| | Q419005000 | REMACHE 4x8 ALMG3 / ALUMINIO | | 17 | 17 | 34 | | | | | |
| 2 | U025604000 | CUERPO DE HORNO | | 1 | 1 | 2 | | | | | |
| S/N | U325621000 | AISLANTE 1455x670x20-AL1C | | 1 | 1 | 2 | | | | | |
| S/N | U745610000 | VITROFIB 390x70x20-AL1C | | 1 | 1 | 2 | | | | | |
| S/N | R660530000 | AISLANTE 680x95x20-AL1C | | 2 | 2 | 4 | | | | | |
| 3 | U025608000 | CIERRE ANTERIOR HORNO | | 1 | 1 | 2 | | | | | |
| 4 | U025609000 | REFUERZO ANTER HORNO | | 1 | 1 | 2 | | | | | |
| 5 | U025613000 | GUIA BANDEJAS | | 2 | 2 | 4 | | | | | |
| 6 | Q151336000 | TORNILLO SOPORTE GUIAS | | 4 | 4 | 8 | | | | | |
| 7 | U325611000 | ESCUA. GUIA SOPORT BANDEJAS | | 2 | 2 | 4 | | | | | |
| | Q419005000 | REMACHE 4x8 ALMG3 / ALUMINIO | | 7 | 7 | 14 | | | | | |
| 8 | Q302022000 | ARANDELA 16X6X1.2 A.304 | | 8 | 8 | 16 | | | | | |
| | Q162040000 | TUERCA EXAGONAL M6 | | 4 | 4 | 8 | | | | | |
| 9 | U025629000 | MARCO COMPLETO INOX | | 1 | 1 | 2 | | | | | |
| S/N | U025623000 | JUNTA PUERTA HORNO | | 1 | 1 | 2 | | | | | |
| 10 | U565620000 | SOPORTE VALVULA MINISIT | | 1 | 1 | 2 | | | | | |
| | Q011348000 | TOR.EXAGONAL M6x60 H.ZINCADO | | 2 | 2 | 4 | | | | | |
| | Q232040000 | ARANDELA A6 | | 2 | 2 | 4 | | | | | |
| | Q221342000 | REMACHE EXAGONAL M5 | | 4 | 4 | 8 | | | | | |
| | Q012032000 | TORNILLO EXAGONAL M5x15 A304 | | 2 | 2 | 4 | | | | | |
| | Q151301000 | PHILIPS 8x5/8 | | 2 | 2 | 4 | | | | | |
| 11 | U025611000 | TAPA PEQUEÑA PLACA HORNO | | 1 | 1 | 2 | | | | | |
| 12 | U025610000 | PLACA HORNO | | 1 | 1 | 2 | | | | | |
| S/N | U135642000 | PARRILLA DE HORNO | | 1 | 1 | 2 | | | | | |
| 13 | U325618000 | CHAPA TAPA SALIDA DE HUMOS | | 1 | 1 | 2 | | | | | |
| | Q151301000 | PHILIPS 8x5/8 | | 2 | 2 | 4 | | | | | |
| 14 | U565608000 | BASE DE HORNO | | 1 | 1 | 2 | | | | | |
| 15 | U742610000 | PROTECTOR QUEMADOR HORNO | | 1 | 1 | 2 | | | | | |
| 16 | U055644000 | CONJUNTO FIJACION BULBO | | 1 | 1 | 2 | | | | | |

| MOD. | COCINAS | ZONA | HORNO | PLANO | C-1668 |
|---|---|---|---|---|---|

| ITEM | CODIGO | DENOMINACION | TEXTO | CG9-41 | CG9-61 | CG9-82 | | | | | NOTAS |
|---|---|---|---|---|---|---|---|---|---|---|---|
| 17 | U025630000 | REFUERZO CUERPO DE HORNO | | 2 | 2 | 4 | | | | | |
| | Q412000000 | REMACHE TUBULAR 4x8 | | 12 | 12 | 24 | | | | | |
| 18 | U025612000 | DISTANCIADOR CAMARA HUMOS | | 1 | 1 | 2 | | | | | |
| | Q412000000 | REMACHE TUBULAR 4x8 | | 33 | 33 | 66 | | | | | |
| | Q221321000 | REMACHE ROSC. NUTSERT M6 | | 4 | 4 | 8 | | | | | |
| | Q221304000 | REMACHE ROSC. NUTSERT M5 | | 1 | 1 | 2 | | | | | |
| | Q221304000 | REMACHE ROSC. NUTSERT M5 | | 4 | 4 | 8 | | | | | |
| 19 | U025605000 | POSTERIOR DE HORNO | | 1 | 1 | 2 | | | | | |
| 20 | U562656000 | EVACUACION CALOR HUMOS | | 1 | 1 | 2 | | | | | |
| | Q081365000 | TORN.ALOMADO 4,8x19 H.ZINCADO | | 2 | 2 | 4 | | | | | |
| 21 | U565610000 | UNION CHIMENEA INFERIOR | | 1 | 1 | 2 | | | | | |
| 22 | U565609000 | UNION CHIMENEA SUPERIOR | | 1 | 1 | 2 | | | | | |
| | Q419005000 | REMACHE 4x8 ALMG3 / ALUMINIO | | 3 | 3 | 6 | | | | | |
| | Q419005000 | REMACHE 4x8 ALMG3 / ALUMINIO | | 3 | 3 | 6 | | | | | |
| 23 | U745605000 | ANTERIOR DE CHIMENEA | | 1 | 1 | 2 | | | | | |
| 24 | U745606000 | POSTERIOR DE CHIMENEA | | 1 | 1 | 2 | | | | | |
| | Q419005000 | REMACHE 4x8 ALMG3 / ALUMINIO | | 8 | 8 | 16 | | | | | |
| 25 | U565611000 | DISTANCIADOR DE CHIMENEA | | 1 | 1 | 2 | | | | | |
| | Q419005000 | REMACHE 4x8 ALMG3 / ALUMINIO | | 3 | 3 | 6 | | | | | |
| 26 | U745607000 | DISTANCIADOR CHIMENEA | | 1 | 1 | 2 | | | | | |
| | Q419005000 | REMACHE 4x8 ALMG3 / ALUMINIO | | 2 | 2 | 4 | | | | | |
| | | | | | | | | | | | |
| | | | | | | | | | | | |
| | | | | | | | | | | | |
| | | | | | | | | | | | |
| | | | | | | | | | | | |
| | | | | | | | | | | | |
| | | | | | | | | | | | |
| | | | | | | | | | | | |
| | | | | | | | | | | | |
| | | | | | | | | | | | |

N.plano
C-1669

Firma

Fecha
2006-10

Aparato
COCINAS CG9-41, 61, 82

PUERTAS

Lamina
7

Fagor Industrial S.Coop.
Onate

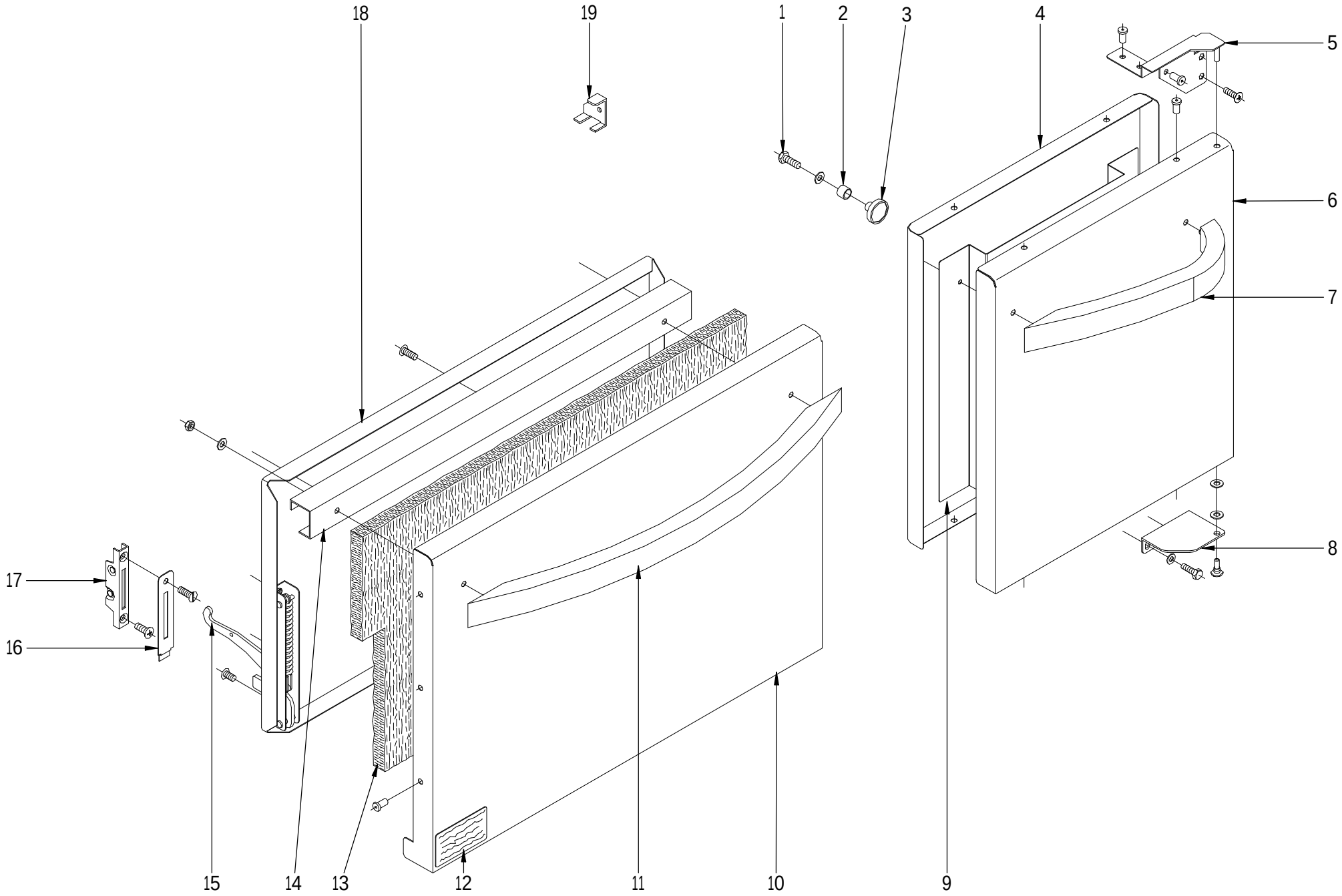

| MOD. | COCINAS | ZONA | PUERTAS | PLANO | C-1669 |
|---|---|---|---|---|---|

| ITEM | CODIGO | DENOMINACION | TEXTO | CG9-41 | CG9-61 | CG9-82 | | | | | NOTAS |
|---|---|---|---|---|---|---|---|---|---|---|---|
| 1 | Q012021000 | TORNILLO EXAGONAL M4x10 A304 | | _ | 2 | _ | | | | | |
| | Q232020000 | ARANDELA PLANA A4 | | _ | 2 | _ | | | | | |
| 2 | X960502000 | FIJACION IMAN | | _ | 2 | _ | | | | | |
| 3 | X960501000 | IMAN | | _ | 2 | _ | | | | | |
| 4 | U020503000 | CONTRAPUERTA LATERAL G900 | | _ | 1 | _ | | | | | |
| 5 | U032608000 | BISAGRA SUP. DECHA COMP(REMO | | _ | 1 | _ | | | | | |
| | Q419005000 | REMACHE 4x8 ALMG3 / ALUMINIO | | _ | 4 | _ | | | | | |
| | Q152004000 | TORNIL, APLASTADO M5x13 A304 | | _ | 2 | _ | | | | | |
| 6 | U020502000 | PUERTA LATERAL G900 | | _ | 1 | _ | | | | | |
| | Q419005000 | REMACHE 4x8 ALMG3 / ALUMINIO | | _ | 6 | _ | | | | | |
| 7 | U020507000 | ASA ARMARIO COMPLETO G900 | | _ | 1 | _ | | | | | |
| | Q162040000 | TUERCA EXAGONAL M6 | | _ | 2 | _ | | | | | |
| | Q302022000 | ARANDELA 16x6x1,2 A304 | | _ | 2 | _ | | | | | |
| 8 | U020511000 | BISAGRA DERECHA INFERIOR | | _ | 1 | _ | | | | | |
| | Q232040000 | ARANDELA A6 | | _ | 1 | _ | | | | | |
| | X960504000 | TORNILLO DE GIRO M8 | | _ | 1 | _ | | | | | |
| | Q012042000 | TORNILLO EXAGONAL M6x15 A304 | | _ | 2 | _ | | | | | |
| | Q302022000 | ARANDELA 16x6x1,2 A304 | | _ | 2 | _ | | | | | |
| 9 | U020515000 | REFUERZO PUERTA | | _ | 1 | _ | | | | | |
| | Q419005000 | REMACHE 4x8 ALMG3 / ALUMINIO | | _ | 2 | _ | | | | | |
| 10 | U020519000 | PUERTA DE HORNO | | 1 | 1 | 2 | | | | | |
| 11 | U020504000 | ASA DE HORNO COMPLETA G900 | | 1 | 1 | 2 | | | | | |
| | Q162040000 | TUERCA EXAGONAL M6 | | 2 | 2 | 4 | | | | | |
| | Q302022000 | ARANDELA 16x6x1,2 A304 | | 2 | 2 | 4 | | | | | |
| 12 | S326540000 | PAPEL POLYESTER 86x130 | | 1 | 1 | 1 | | | | | |
| 13 | U260502000 | AISLANTE 680x380x20 | | 1 | 1 | 2 | | | | | |
| 14 | U320507000 | REFUERZO DE PUERTA | | 1 | 1 | 2 | | | | | |
| 15 | U010511000 | BISAGRA IZQUIERDA | | 1 | 1 | 2 | | | | | |
| S/N | U010504000 | BISAGRA DERECHA | | 1 | 1 | 2 | | | | | |
| | Q152022000 | TORNILLO M6x8 | | 6 | 6 | 12 | | | | | |
| | | | | | | | | | | | |

| MOD. | COCINAS | ZONA | PUERTAS | PLANO | C-1669 |
|---|---|---|---|---|---|

| ITEM | CODIGO | DENOMINACION | TEXTO | CG9-41 | CG9-61 | CG9-82 | | | | | NOTAS |
|---|---|---|---|---|---|---|---|---|---|---|---|
| 16 | U010510000 | EMBELLECEDOR GUIA BISAGRA | | 2 | 2 | 4 | | | | | |
| | Q152017000 | TORNILLO AMARRE M6x13 A304 | | 2 | 2 | 4 | | | | | |
| 17 | U010512000 | GUIA BISAGRA | | 2 | 2 | 4 | | | | | |
| | Q042043000 | TORNILLO AVELLANADO M6x20 | | 2 | 2 | 4 | | | | | |
| 18 | U020522000 | CONTRAPUERTA HORNO | | 1 | 1 | 2 | | | | | |
| | Q152017000 | TORNILLO AMARRE M6x13 A304 | | 3 | 3 | 6 | | | | | |
| | Q419005000 | REMACHE 4x8 ALMG3 / ALUMINIO | | 6 | 6 | 12 | | | | | |
| 19 | U746501000 | ESCUADRA MONTAJE PUERTA | | 2 | 2 | 2 | | | | | |

| MOD. | COCINAS | ZONA | VARIOS | PLANO | |
|---|---|---|---|---|---|

| ITEM | CODIGO | DENOMINACION | TEXTO | CG9-20 | CG9-40 | CG9-60 | CG9-41 | CG9-61 | CG9-82 | | NOTAS |
|---|---|---|---|---|---|---|---|---|---|---|---|
| | U566553000 | FOLLETO DE INSTRUCION. CG9-00 | | 1 | 1 | 1 | 1 | 1 | 1 | | |

| MOD. | COCINAS | ZONA | PIEZAS ESPECIFICAS PARA LOS DISTINTOS GASES | PLANO | C-1665/1666 /1667 |
|---|---|---|---|---|---|

| ITEM | CODIGO | DENOMINACION | TEXTO | CG9-20 | CG9-40 | CG9-60 | CG9-41 | CG9-61 | CG9-82 | | NOTAS |
|---|---|---|---|---|---|---|---|---|---|---|---|
| | | **BUTANO - PROPANO** | | | | | | | | | |
| 1 | U112401000 | TOBERA Ø 1,55 (10500) | | _ | 1 | 1 | 1 | 1 | 2 | | C-1665 |
| 8 y 28 | U442138000 | INYECTOR Ø 0,25 | | 2 | 4 | 6 | 5 | 7 | 10 | | C-1666 / C-1667 |
| 14 | U122407000 | TOBERA Ø 1,05 (4000) | | 1 | 2 | 3 | 2 | 3 | 4 | | C-1665 |
| 19 | U052401000 | TOBERA Ø 1,45 (QUEM. HORNO) | | _ | _ | _ | 1 | 1 | 2 | | C-1665 |
| 27 | O631000000 | TOBERA Ø 1,40 (8000) | | 1 | 1 | 2 | 1 | 2 | 2 | | C-1665 |
| S/N | U136501000 | INDICADOR (BUTANO-PROPANO) | | 1 | 1 | 1 | 1 | 1 | 1 | | |
| | | | | | | | | | | | |
| | | | | | | | | | | | |
| | | **GAS NATURAL** | | | | | | | | | |
| 1 | R275050000 | TOBERA Ø 2,35 (10500) | | _ | 1 | 1 | 1 | 1 | 2 | | C-1665 |
| 8 y 28 | U442137000 | INYECTOR Ø 0,4 | | 2 | 4 | 6 | 5 | 7 | 10 | | C-1666 / C-1667 |
| 14 | 9105100000 | TOBERA Ø 1,50 (4000) | | 1 | 2 | 3 | 2 | 3 | 4 | | C-1665 |
| 19 | 1011600000 | TOBERA Ø 2,25 (QUEM. HORNO) | | _ | _ | _ | 1 | 1 | 2 | | C-1665 |
| 27 | R614500000 | TOBERA Ø 2 (8000) | | 1 | 1 | 2 | 1 | 2 | 2 | | C-1665 |
| S/N | U134402000 | INDICADOR GAS NATURAL | | 1 | 1 | 1 | 1 | 1 | 1 | | |
| | | | | | | | | | | | |
| | | | | | | | | | | | |
| | | **GAS VILLA** | | | | | | | | | |
| 1 | U192402000 | TOBERA Ø 4,90 (10500) | | _ | 1 | 1 | 1 | 1 | 2 | | C-1665 |
| 8 y 28 | U442138000 | INYECTOR Ø 0,25 (REGULAR) | | 2 | 4 | 6 | 5 | 7 | 10 | | C-1666 / C-1667 |
| 14 | R302401000 | TOBERA Ø 2,90 (4000) | | 1 | 2 | 3 | 2 | 3 | 4 | | C-1665 |
| 19 | 9426000000 | TOBERA Ø 4,23 (QUEM. HORNO) | | _ | _ | _ | 1 | 1 | 2 | | C-1665 |
| 27 | U262401000 | TOBERA Ø 4,10 (8000) | | 1 | 1 | 2 | 1 | 2 | 2 | | C-1665 |
| S/N | U134310000 | INDICADOR GAS VILLA | | 1 | 1 | 1 | 1 | 1 | 1 | | |
| | | | | | | | | | | | |
| | | | | | | | | | | | |
| | | | | | | | | | | | |
| | | | | | | | | | | | |
| | | | | | | | | | | | |
| | | | | | | | | | | | |