SIMAG

SC 30 (SM-SCR)
SC 40 (SM-SCR)

R 134 A VERSION

SPARE PARTS LIST
CATALOGO RICAMBI
CATALOGUE PIÈCES DÉTACHÉES
ERSATZTEILENKATALOG

090090.09 REV. 05/2001

PAGE PAGINA PAGE SEITE	TABLE OF CONTENTS	INDICE	TABLE DES MATIÈRES	INHALTVERZEICHNIS
1	TABLE OF CONTENTS	INDICE	TABLE DES MATIÈRES	INHALTVERZEICHNIS
2-3	UNIT PANELS	ASSIEME MOBILE	ENS. CARROSSERIE	MACHINE GEHÄUSE
4-5	REFRIGERANT SYSTEM AIR COOLED	SISTEMA REFRIGERANTE RAFFR. AD ARIA	CIRCUIT FRIGORIFIQUE REFROID. A AIR	GEFRIERSYSTEM LUFTGEKÜHLT
6-7	REFRIGERANT SYSTEM WATER SYSTEM	SISTEMA REFRIGERANTE RAFFR. AD ACQUA	CIRCUIT FRIGORIFIQUE REFROID. A EAU	GEFRIERSYSTEM WASSERGEKÜHLT
8-9	WATER SYSTEM	CIRCUITO IDRAULICO	CIRCUIT HYDRAULIQUE	WASSER SYSTEM
10-11	CONTROL BOX	SCATOLA DI CONTROLLO	BOITE ELECTRIQUE	SCHALTSCHRANK
12	COMPRESSON AND ELECTRIC COMPONENT CHARTS	TABELLA COMPRESSORI E COMPONENTI ELETTRICI	LISTE DES COMPRESSEURS ET COMPOSANTS ELECTRIQUE	KOMPRESSOR UND ELEKTRISCHER TEILLISTE

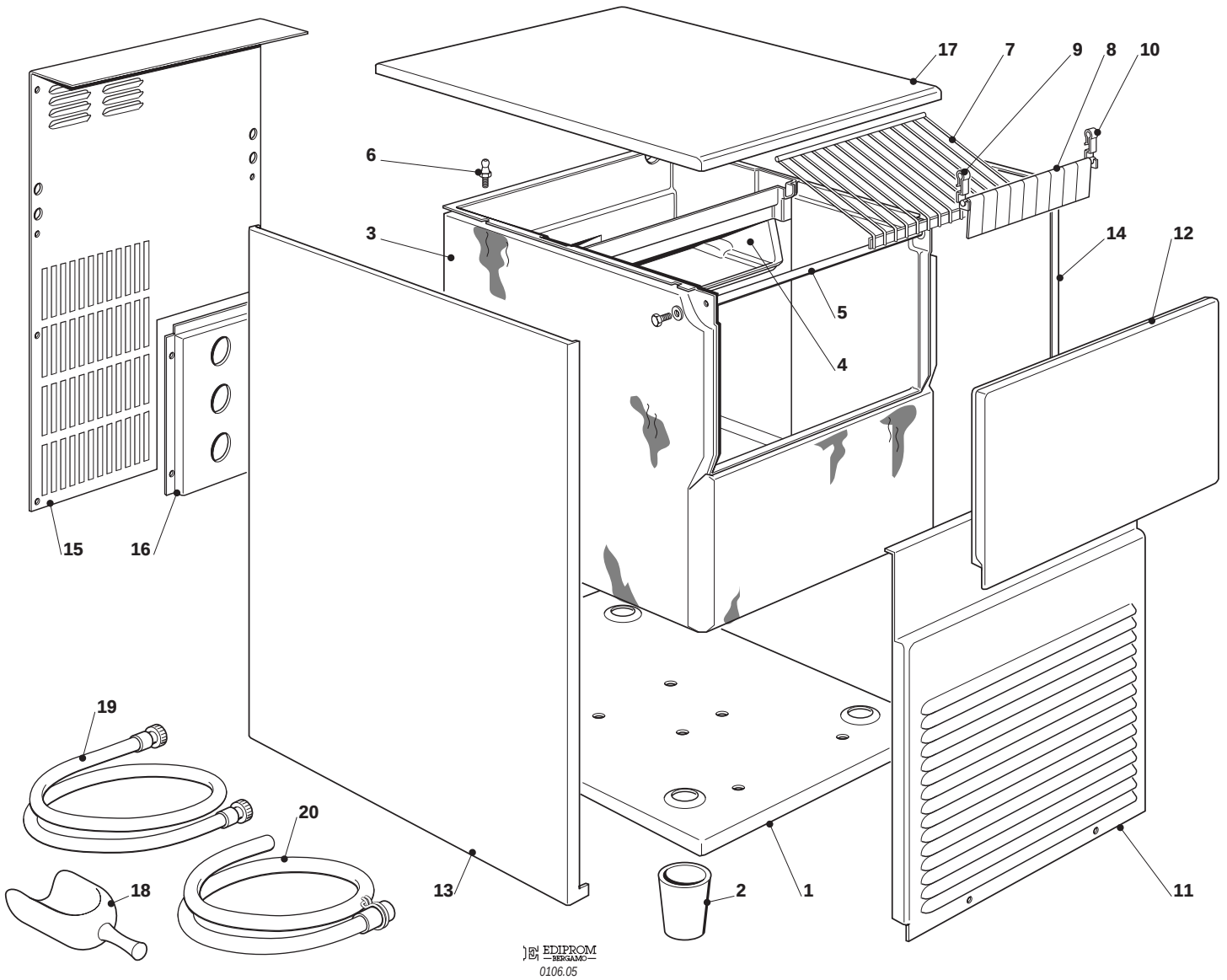
17
7
9
8
10
6
3
14
12
5
4
15
16
19
20
18
13
2
1
11
EDIPROM
BERGAMO
0106.05

SC 30 - SC 40 - UNIT PANELS - ASSIEME MOBILE - ENS. CARROSSERIE - MACHINE GEHAUSE

ITEM NO POS NO REP. NO REF. NO	PART NO - CODICE REFERENCE - STUECK NR. **SC 30**	**SC 40**	DESCRIPTION	DESCRIZIONE	DESIGNATION	BESCHREIBUNG
1	781406 04	781406 03	BASE	PIASTRA DI BASE	PLAQUE DE BASE	GRUNDPLATTE
2	660638 00		LEG	PIEDE REGOLABILE	PIED RÉGLABE	GERÄTEFUSS
3	782094 01R	782094 02R	INSULATED BIN ASSY	ASSIEME CELLA ISOLATA	ENS. CABINE	ISOLIEREISSPEICHER
4	660635 01		EVAPORATOR HOUSING	INVOLUCRO EVAPORATORE	CHAMBRE INTERIEUR	CELLE INTERN
5	732016 08		BIN DOOR BRACKET	ASTA SPORTELLO	TIGE PORTE	KLAPPENACHSE
6	650697 02		STUD	PERNO	AXE	STIFT
7	650714 00 650714 01 650714 03		ICE DEFLECTOR SC 30 - 40 ICE DEFLECTOR SM 30 - 40 ICE DEFLECTOR SCR 30 - 40	GRIGLIA SCORR. CUBETTI SC 30 - 40 GRIGLIA SCORR. CUBETTI SM 30 - 40 GRIGLIA SCORR. CUBETTI SCR 30 - 40	GRILLE GLISSEMENT GLAÇON SC 30 - 40 GRILLE GLISSEMENT GLAÇON SM 30 - 40 GRILLE GLISSEMENT GLAÇON SCR 30 - 40	ABGLEITGRILL SC 30 - 40 ABGLEITGRILL SM 30 - 40 ABGLEITGRILL SCR 30 - 40
8	783172 00		CURTAIN ASSY	ASSIEME TENDINA	ENS. LAMELLE	ABDECKKLAPPE GESAMTHEIT
9	660388 00		RIGHT CURTAIN SUPPORT	SUPP. TENDINA DESTRO	SUPP. LAMELLE DROITE	RECHTE ABDECKLAPPE HALTERUNG
10	660388 01		LEFT CURTAIN SUPPORT	SUPP. TENDINA SINISTRO	SUPP. LAMELLE GAUCHE	LINKE ABDECKLAPPE HALTERUNG
11	721692 00	721693 00	FRONT PANEL S.S.	PANNELLO ANTERIORE INOX	PANNEAU AVANT ACIER INOX	VORDERWAND EDELSTAHL
12	782092 02		BIN DOOR	SPORTELLO	PORTE CABINE	SPEICHERTUER
13	721689 00	721691 00	LEFT SIDE PANEL S.S.	PANNELLO SINISTRO INOX	JOUE GAUCHE ACIER INOX	LINKE GEHÄUSESEITE EDELSTAHL
14	721688 00	721690 00	RIGHT SIDE PANEL S.S.	PANNELLO DESTRO INOX	JOUE DROITE ACIER INOX	RECHTEGEHÄUSESEITE EDELSTAHL
15	702229 00	702230 00	REAR PANEL	PANNELLO POSTERIORE	PANNEAU POSTERIEUR	HINTERE ABDECKUNG
16	702180 00		METAL BRACKET FOR FITTING	SUPPORTO ATTACCHI	SUPPORT DE RACCORDS	METALLTRÄGER
17	781405 02		TOP PANEL S.S.	PANNELLO SUPERIORE INOX	ENS. COUVERCLE	DECKEL GESAMTHEIT
18	650071 00		ICE SCOOP	SESSOLA	SASSE	EISSCHAUFEL
19	060513 00		KIT WATER SUPPLY PIPE	KIT TUBO ALIM. ACQUA	KIT TUYAU D'ALIM. EAU	WASSERANSCHLUSSCHLAUCH
20	060513 01		KIT WATER DRAIN PIPE	KIT TUBO SCARICO ACQUA	KIT TUYAU VIDANGE EAU	WASSER SLAUFSCHLAUCH

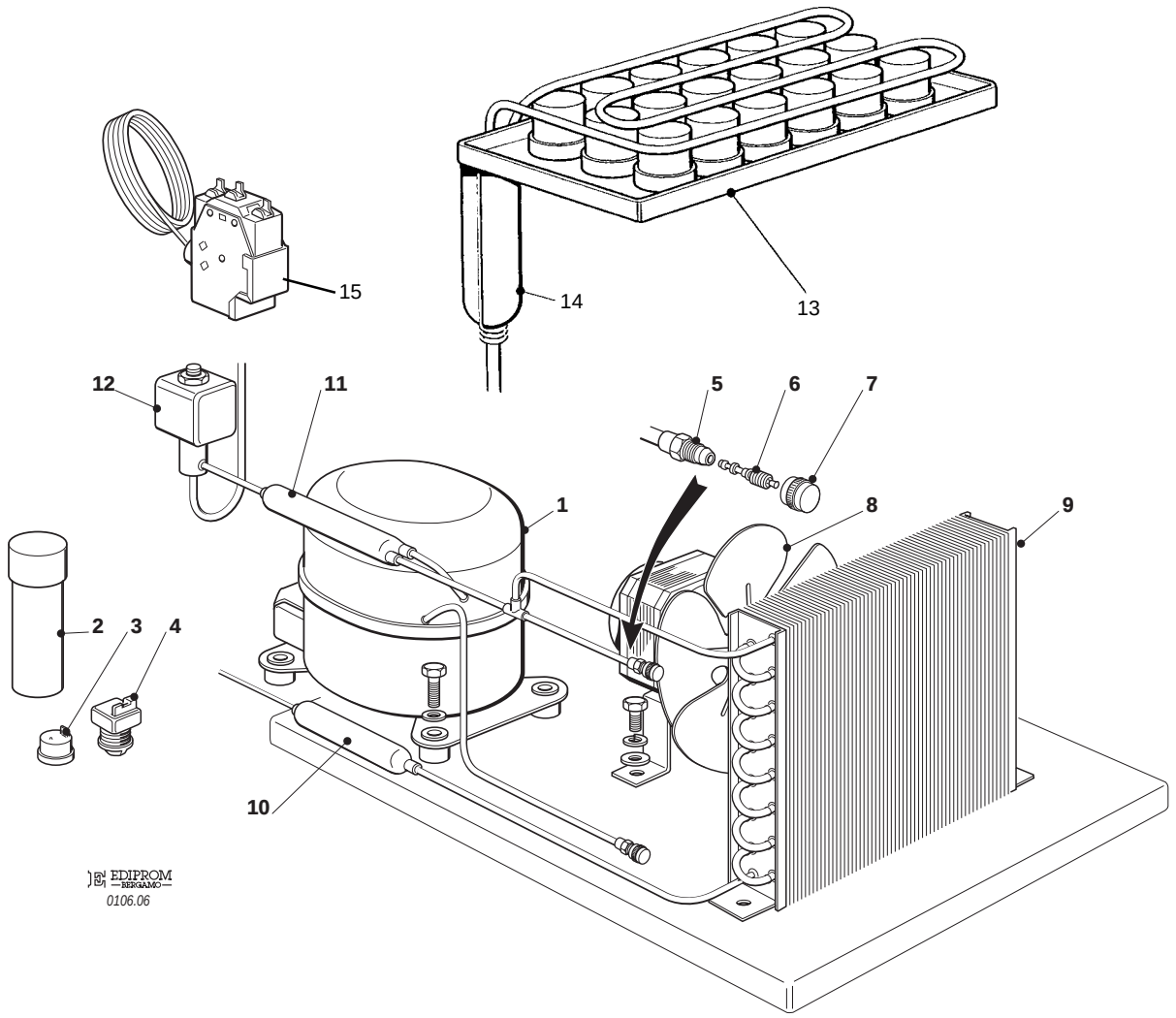
15
14
13
12
11
5
6
7
1
8
9
2
3
4
10
EDIPROM
BERGAMO
0106.06

SC 30 - SC 40 - REFRIGERANT SYSTEM AIR COOLED - SISTEMA REFRIGERANTE RAFFR. AD ARIA
CIRCUIT FRIGORIFIQUE REFROID. PAR AIR - LUFTGEKÜHLT GEFRIERSYSTEM

ITEM NO POS NO REP. NO REF. NO	PART NO - CODICE REFERENCE - STUECK NR. **SC 30**	**SC 40**	DESCRIPTION	DESCRIZIONE	DESIGNATION	BESCHREIBUNG
1	670100 00	670101 00	COMPRESSOR	COMPRESSORE	COMPRESSEUR	KOMPRESSOR
2	620167 29	620167 01	START CAPACITOR	CONDENSATORE D'AVVIAMENTO	CAPACITE DE DEMARRAGE	START CONDENSATOR
3	620058 69	620058 77	PROTECTOR	PROTETTORE	PROTECTEUR	SCHUTZGERAT
4	620057 31	620057 42	RELAY	RELÈ	RELAIS	RELAIS
5	650109 00		VALVE BODY	CORPO VALVOLA	CORPS DE VANNE	VENTILGEHAUSE
6	670012 00		VALVE PISTON	PISTONCINO VALVOLA	PISTON	VENTILKOLBEN
7	650106 00		VALVE CAP	CAPPUCCIO VALVOLA	CAPUCHON DE VANNE	VENTILKLAPPE
8	620419 02 620419 32	 620419 33	FAN MOTOR FAN BLADE	MOTOVENTILATORE VENTOLA	MOTO-VENTILATEUR HELICE	LÜFTERMOTOR FLÜGEL
9	620420 00	620439 00	AIR COOLED CONDENSER	CONDENSATORE AD ARIA	CONDENSEUR	KONDENSATOR
10	630003 05		DRIER	FILTRO DEUMIDIFICATORE	FILTRE DESHYDRATEUR	TROCKNER
11	630137 00	630137 01	MECHANICAL FILTER	FILTRO MECCANICO	FILTRE MECANIQUE	MECHANISCHFILTERN
12	620306 48 620306 27		HOT GAS VALVE COIL HOT GAS VALVE BODY	BOBINA VALVOLA GAS CALDO CORPO VALVOLA GAS CALDO	BOBINE VANNE GAZ CHAUDS CORP VANNE GAZ CHAUDS	HEISSGAZ VENTIL SPULE VENTILGEHAUSE
13	784491 00 784488 00 784463 00		EVAPORATOR ASSY SC 30 - 40 EVAPORATOR ASSY SM 30 - 40 EVAPORATOR ASSY SCR 30 - 40	ASSIEME EVAPORATORE SC 30 - 40 ASSIEME EVAPORATORE SM 30 - 40 ASSIEME EVAPORATORE SCR 30 - 40	ENS. EVAPORATEUR SC 30 - 40 ENS. EVAPORATEUR SM 30 - 40 ENS. EVAPORATEUR SCR 30 - 40	VERDAMPFER SC 30 - 40 VERDAMPFER SM 30 - 40 VERDAMPFER SCR 30 - 40
14	784444 03	784444 05	ACCUMULATOR ASSY	ASSIEME ACCUMULATORE	ENS. ACCUMULATEUR	SAMMLER UND SAUGLEITUNGEN
15	620075 00		PRESSURE CONTROL	PRESSOSTATO	PRESSOSTAT	PRESSOSTAT

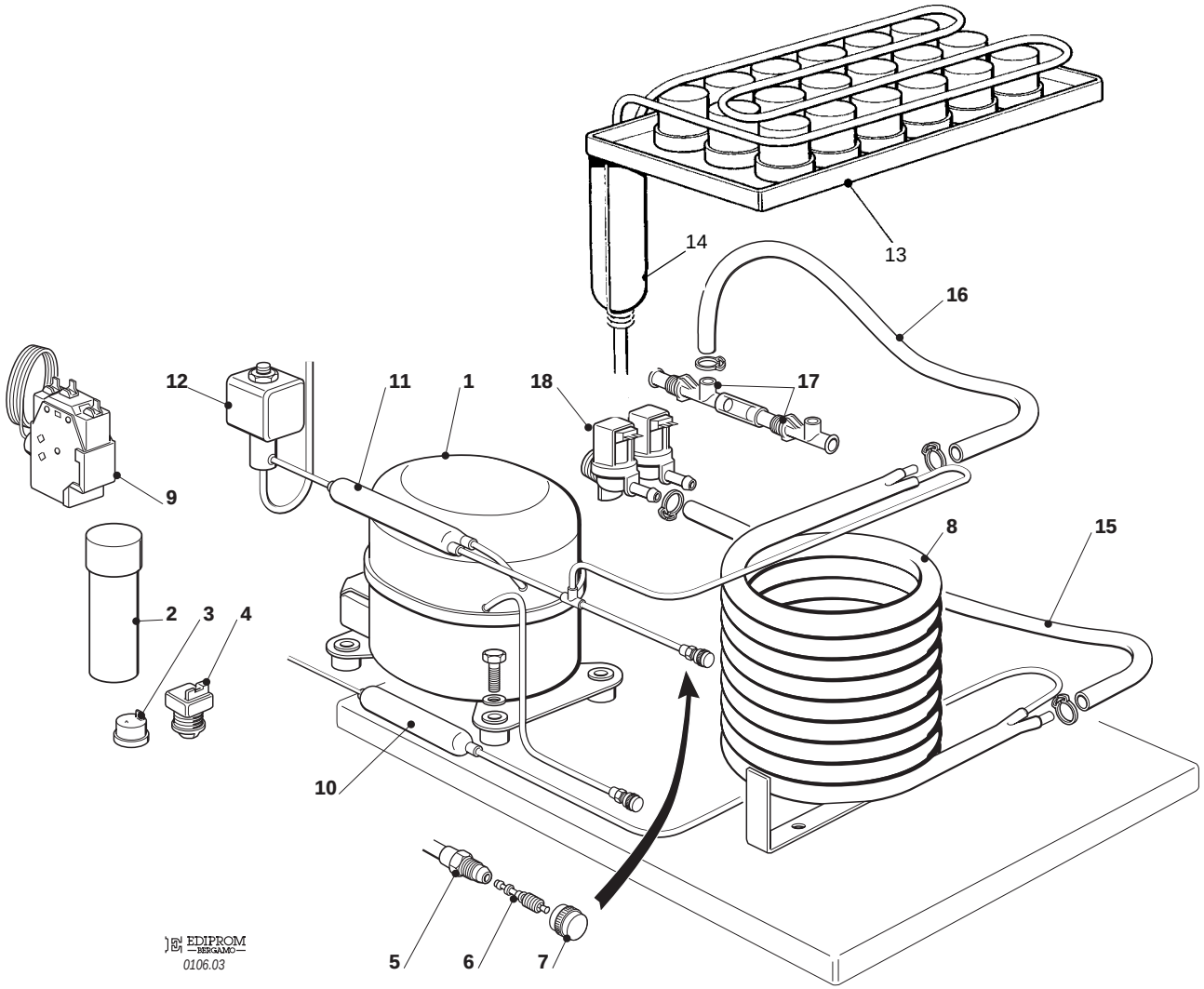
13
14
16
12
11
1
18
17
9
8
15
2
3
4
10
5
6
7
EDIPROM
BERGAMO
0106.03

SC 30 - SC 40 - REFRIGERANT SYSTEM WATER COOLED - SISTEMA REFRIGERANTE RAFFR. AD ACQUA
CIRCUIT FRIGORIFIQUE REFROID. PAR EAU - WASSERGEKÜHLT GEFRIERSYSTEM

ITEM NO POS NO REP. NO REF. NO	PART NO - CODICE REFERENCE - STUECK NR. **SC 30**	**SC 40**	DESCRIPTION	DESCRIZIONE	DESIGNATION	BESCHREIBUNG
1	670100 00	670101 00	COMPRESSOR	COMPRESSORE	COMPRESSEUR	KOMPRESSOR
2	620167 29	620167 01	START CAPACITOR	CONDENSATORE D'AVVIAMENTO	CAPACITE DE DEMARRAGE	START CONDENSATOR
3	620058 69	620058 77	PROTECTOR	PROTETTORE	PROTECTEUR	SCHUTZGERAT
4	620057 31	620057 42	RELAY	RELÈ	RELAIS	RELAIS
5	650109 00		VALVE BODY	CORPO VALVOLA	CORPS DE VANNE	VENTILGEHAUSE
6	670012 00		VALVE PISTON	PISTONCINO VALVOLA	PISTON	VENTILKOLBEN
7	650106 00		VALVE CAP	CAPPUCCIO VALVOLA	CAPUCHON DE VANNE	VENTILKLAPPE
8	620389 00		WATER COOLED CONDENSER	CONDENSATORE ACQUA	CONDENSEUR A EAU	WASSER KONDENSATOR
9	620075 00		PRESSURE CONTROL	PRESSOSTATO	PRESSOSTAT	PRESSOSTAT
10	630003 05		DRIER	FILTRO DEUMIDIFICATORE	FILTRE DESHYDRATEUR	TROCKNER
11	630137 00	630137 01	MECHANICAL FILTER	FILTRO MECCANICO	FILTRE MECANIQUE	MECHANISCHFILTERN
12	620306 48 620306 27		HOT GAS VALVE COIL HOT GAS VALVE BODY	BOBINA VALVOLA GAS CALDO CORPO VALVOLA GAS CALDO	BOBINE VANNE GAZ CHAUDS CORP VANNE GAZ CHAUDS	HEISSGAZ VENTIL SPULE VENTILGEHAUSE
13	784491 00 784488 00 784463 00		EVAPORATOR ASSY SC 30 - 40 EVAPORATOR ASSY SM 30 - 40 EVAPORATOR ASSY SCR 30 - 40	ASSIEME EVAPORATORE SC 30 - 40 ASSIEME EVAPORATORE SM 30 - 40 ASSIEME EVAPORATORE SCR 30 - 40	ENS. EVAPORATEUR SC 30 - 40 ENS. EVAPORATEUR SM 30 - 40 ENS. EVAPORATEUR SCR 30 - 40	VERDAMPFER SC 30 - 40 VERDAMPFER SM 30 - 40 VERDAMPFER SCR 30 - 40
14	784444 03	784444 05	ACCUMULATOR ASSY	ASSIEME ACCUMULATORE	ENS. ACCUMULATEUR	SAMMLER UND SAUGLEITUNGEN
15	281900 01		PLASTIC TUBE - PER METER	TUBO PVC - PER METRO	TUYAU EN PLASTIQUE - POUR MT.	PLASTIK ROHR - PRO METER
16	281900 01		PLASTIC TUBE - PER METER	TUBO PVC - PER METRO	TUYAU EN PLASTIQUE - POUR MT.	PLASTIK ROHR - PRO METER
17	650703 00		WATER DRAIN FITTING	RACCORDO SCARICO ACQUA	RACCORD EVACUATION EAU	WASSERABFLUSSANSCHLUSSE
18	650105 51		WATER INLET VALVE	ELETTROVALVOLA DOPPIA	VANNE ARRIVÉE EAU	ELEKTROVENTIL

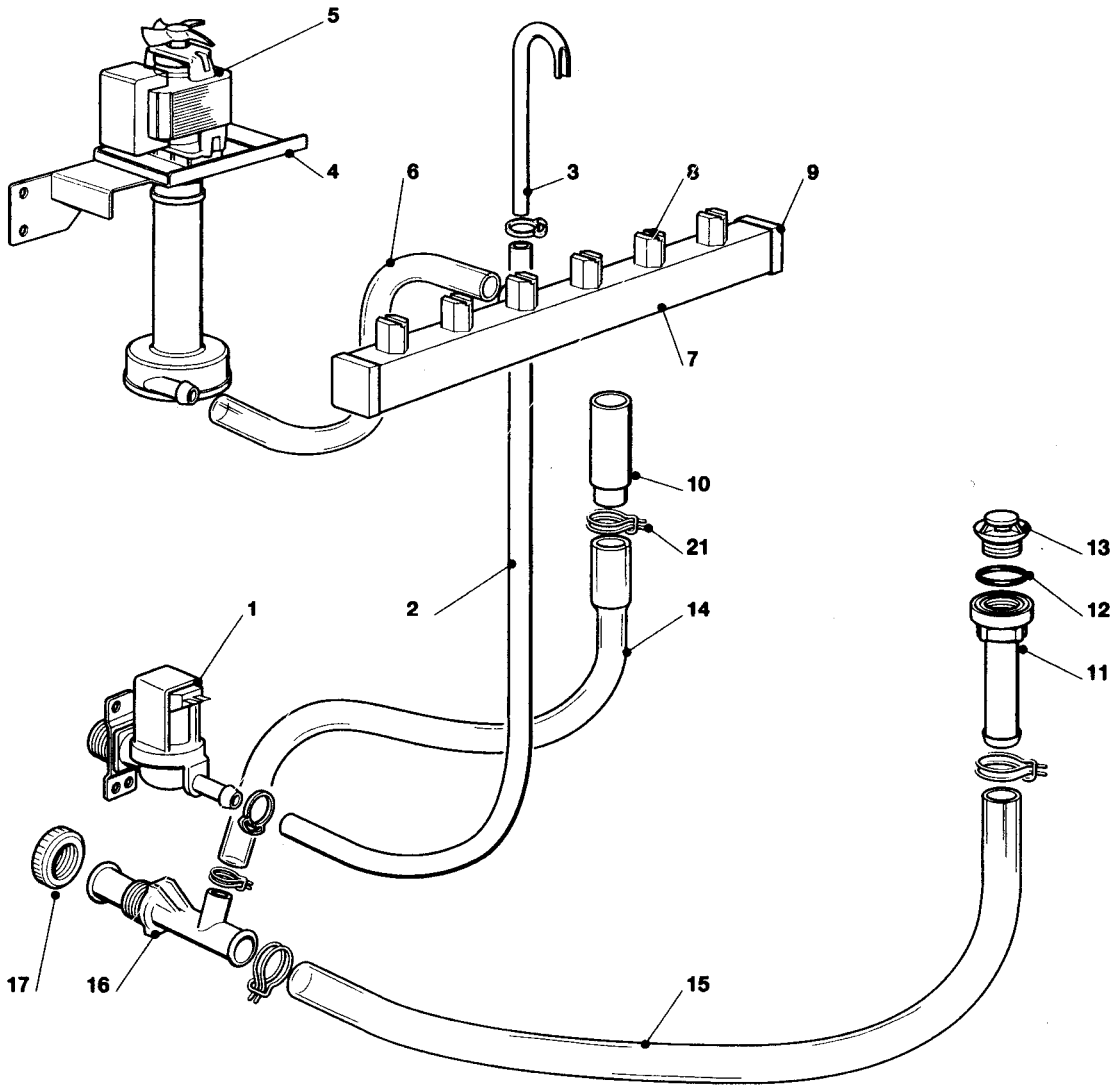
5
4
6
3
8
9
7
10
21
2
14
1
13
12
11
17
16
15

SC 30 - SC 40 - WATER SYSTEM - CIRCUITO IDRAULICO - CIRCUIT HYDRAULIQUE - WASSERSYSTEM

ITEM NO POS NO REP. NO REF. NO	PART NO - CODICE REFERENCE - STUECK NR. **SC 30** | **SC 40**	DESCRIPTION	DESCRIZIONE	DESIGNATION	BESCHREIBUNG
1	650105 50 650105 51	WATER INLET VALVE - AIR COOLED WATER INLET VALVE - WATER COOLED	VALVOLA INGR. ACQUA - RAFF. ARIA VALVOLA INGR. ACQUA - RAFF. ACQUA	VANNE ARRIVEE EAU - REFR. AIR VANNE ARRIVEE EAU - REFR. EAU	WASSEREINLAUFVENTIL - LUFTGEKÜHLT WASSEREINLAUFVENTIL - WASSERGEKÜHLT
2	281900 01	PLASTIC TUBE - PER METER	TUBO INGRESSO ACQUA	TUYAU EN PLASTIQUE - POUR MT.	PLASTIK ROHR - PRO METER
3	734683 00	WATER INLET COPPER PIPE	TUBO RAME INGR. ACQUA	TUYAU ENTREE EAU CUIVRE	WASSEREINLAUFROHR - CUPPER
4	724333 00	METAL BRACKET	SUPPORTO POMPA INOX	SUPPORT METALLIQUE	METALLTRAEGER
5	620433 00	WATER PUMP	POMPA	POMPE A EAU	WASSER PUMPE
6	610150 03	PUMP INLET WATER PIPE	TUBO MANDATA POMPA	TUYAU DE REFOULEMENT POMPE	PUMPENABFLUSSCHLAUCH
7	650665 05 650665 04 650665 22	SPRAY BAR SC 30 - 40 SPRAY BAR SM 30 - 40 SPRAY BAR SCR 30 - 40	TUBO SPRUZZATORE SC 30 - 40 TUBO SPRUZZATORE SM 30 - 40 TUBO SPRUZZATORE SCR 30 - 40	COLLECTEUR SC 30 - 40 COLLECTEUR SM 30 - 40 COLLECTEUR SCR 30 - 40	KOLLEKTOR SC 30 - 40 KOLLEKTOR SM 30 - 40 KOLLEKTOR SCR 30 - 40
8	660558 00	SPRAY JET	SPRUZZATORI	GICLEURS	SPRÜHDÜSEN
9	660557 00	PLUG	UGELLO SPRUZZATORE	BOUCHON POUR COLLECTEUR	STOPFEN
10	281720 06	OVERFLOW STAND PIPE	TUBO DI TROPPO PIENO	TROP PLEIN	UEBERLAUFROHR
11	660219 01	DRAIN FITTING	SCARICO CELLA	TUYAU EVACUATION	ABFLUSSROHR
12	640134 00	O RING	O-RING	JOINT TORIQUE	SIMMER RING
13	660211 01	DRAIN FILTER	FILTRO SCARICO CELLA	FILTRE CABINE STOCKAGE	BEHÄLTER ABLAUF FILTER
14	610191 01	OVERFLOW DRAIN TUBE	TUBO SCARICO TROPPO PIENO	TUYAU VIDANGE TROP PLAIN	BEHÄLTER ABLAUF
15	610148 19	STORAGE BIN DRAIN TUBE	TUBO SCARICO CONTENITORE	TUYAU VIDANGE CONTENEUR	BEHÄLTERAUSLAUFSCHLAUCH
16	660224 00	WATER DRAIN FITTING	RACCORDO A "T"	RACCORD EVACUATION EAU	WASSERABFLUSSANSCHLUSSE
17	660535 00	PLASTIC RING NUT	GHIERA	COLLIER DE SERRAGE EN PLAST.	PLASTIKRING MUTTER

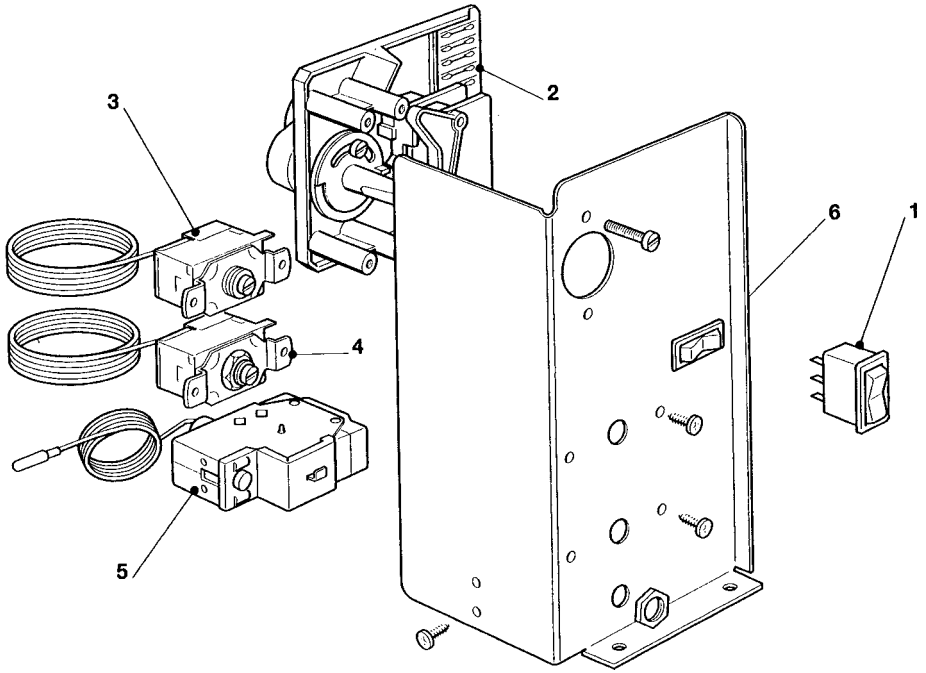
3
2
6
1
4
5

SC 30 - SC 40 - CONTROL BOX - SCATOLA DI CONTROLLO - BOITE ELECTRIQUE - SCHALTSCHRANK

ITEM NO POS NO REP. NO REF. NO	PART NO - CODICE REFERENCE - STUECK NR. **SC 30** | **SC 40**	DESCRIPTION	DESCRIZIONE	DESIGNATION	BESCHREIBUNG
1	620453 00	SWITCH	INTERRUTTORE LUMINOSO	INTERRUPTEUR LUMINEUX	SCHALTER
2	620441 00	TIMER	TIMER	MINUTERIE	TIMER
3	620209 00	BIN THERMOSTAT	TERMOSTATO CONTENITORE	THERMOSTAT CONTENEUR	BEHÄLTER THERMOSTAT
4	620201 01	EVAPORATOR THERMOSTAT	TERMOSTATO EVAPORATORE	THERMOSTAT EVAPORATEUR	VERDAMPFERTHERMOSTAT
5	620231 01	PRESSURE SAFETY	PRESSOSTATO DI SICUREZZA	PRESSOSTAT DE SECURITÉ	DRUCKWÄCHTER
6	620442 01	SWITCH	COMMUTATORE UNIPOLARE	INTERRUPTEUR	UMSCHALTER

SC 30 - SC 40 - COMPRESSOR CHART - TABELLA COMPRESSORI - TABLEAU COMPRESSEUR - KOMPRESSOR KARTE

MODEL MODELLO MODELE MODELL	VOLTS TENSIONE TENSION SPANNUNG	COMPRESSOR MODEL MOD. COMPRESSORE TYPE COMPRESSEUR KOMPRESSOR TYP	COMPRESSOR COMPRESSORE COMPRESSEUR KOMPRESSOR	RELAY RELE' RELAIS RELAIS	PROTECTOR PROTETTORE PROTECTEUR SCHUTZGERAT	START CAPACITOR CAPACITA D'AVV. CAPACITE DE DEMARRAGE START KONDENSATOR
SC 30 SC 40	115/60/1	–	–	–	–	–
SC 30 SC 40	230/60/1 230/60/1	– CAE 4448 Y	– 670101 02	– 620057 49	– 620058 80	– 620167 01
SC 30 SC 40	230/50/1 230/50/1	GL 90 TB CAE 4448 Y	670100 00 670101 00	620057 31 620057 42	620058 69 620058 77	620167 29 620167 01

SC 30 - SC 40 - ELECTRIC COMPONENTS CHART - TABELLA COMPONENTI ELETTRICI
TABLEAU COMPOSANTS ELECTRIQUE - ELEKTRISCHEKARTE

MODEL MODELLO MODELE MODELL	VOLTS TENSIONE TENSION SPANNUNG	WATER PUMP POMPA POMPE A EAU WASSER PUMPE	FAN MOTOR ONLY MOTORE VENTILATORE MOTEUR VENTILATEUR LUFTER MOTOR	WATER INLET VALVE VALV. INGR. ACQUA V.E.M. ARRIVEE EAU WASSEREIN. VENTIL	HOT GAS VALVE COIL BOBINA VALVOLA GAS CALDO BOBINE V.E.M. GAZ CHAUDS HEISSGAZ VENTIL SPULE	TIMER TIMER MINUTERIE TIMER
SC 30 - 40	115/60/1	–	–	–	–	–
SC 30 - 40	230/60/1	620433 01	620419 02	650105 50 / 650105 51 (AIR / WATER)	620306 48	620441 00
SC 30 - 40	230/50/1	620433 00	620419 02	650105 50 / 650105 51 (AIR / WATER)	620306 48	620441 00

SIMAG
ICE MACHINES

www.simag.it

SIMAG
via Risorgimento, 4
20017 Mazzo di Rho (MI) - Italy
Tel. +39 02 93900215 (Commerciale - Sales Dept.)
Tel. +39 02 93960357 (Assistenza - Service Dept.)
Fax +39 02 93900226 (Commerciale - Sales Dept.)
Fax +39 02 93960366 (Assistenza - Service Dept.)
e-mail: sales@simag.it
e-mail: service@simag.it

Singapore Office
SIMAG FAR EAST
627A Aljunied Road
04-04 Biztech Centre
Singapore 389842
Tel. ++65 6738 5393
Fax ++65 6738 1959
e-mail: scotsice@singnet.com.sg

Certified ISO 9001
TOTAL QUALITY