ARMARIO SNACK DE REFRIGERACIÓN CONCEPT / SNACK CABINET COOLING CONCEPT

CAFP-2103 19029678 / CAFP-2104 19029680 / CAFP-2105 19029682 / CAFP-2106 19029684

CAEP-2103 19029726

FAGOR

Versión 2014-10

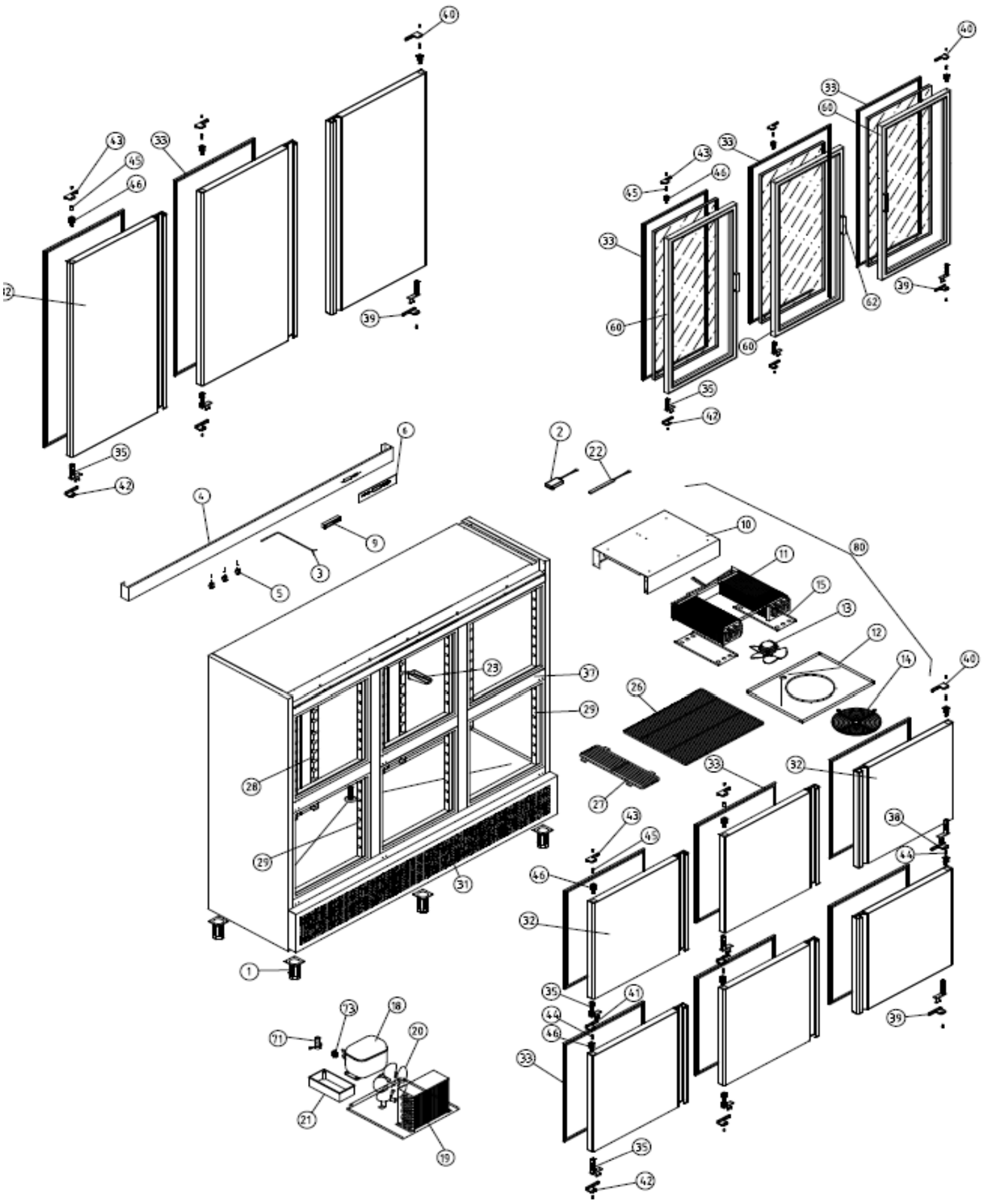

ARMARIO SNACK DE REFRIGERACIÓN CONCEPT / SNACK CABINET COOLING CONCEPT

CAF-2104 C 19029703 / CAF-2105 C 19029705 / CAF-2106 C 19029707

CAF-2105 P 19029715 / CAF-2105 P 19029717 / CAF-2106 P 19029719

FAGOR

Versión 2014-10

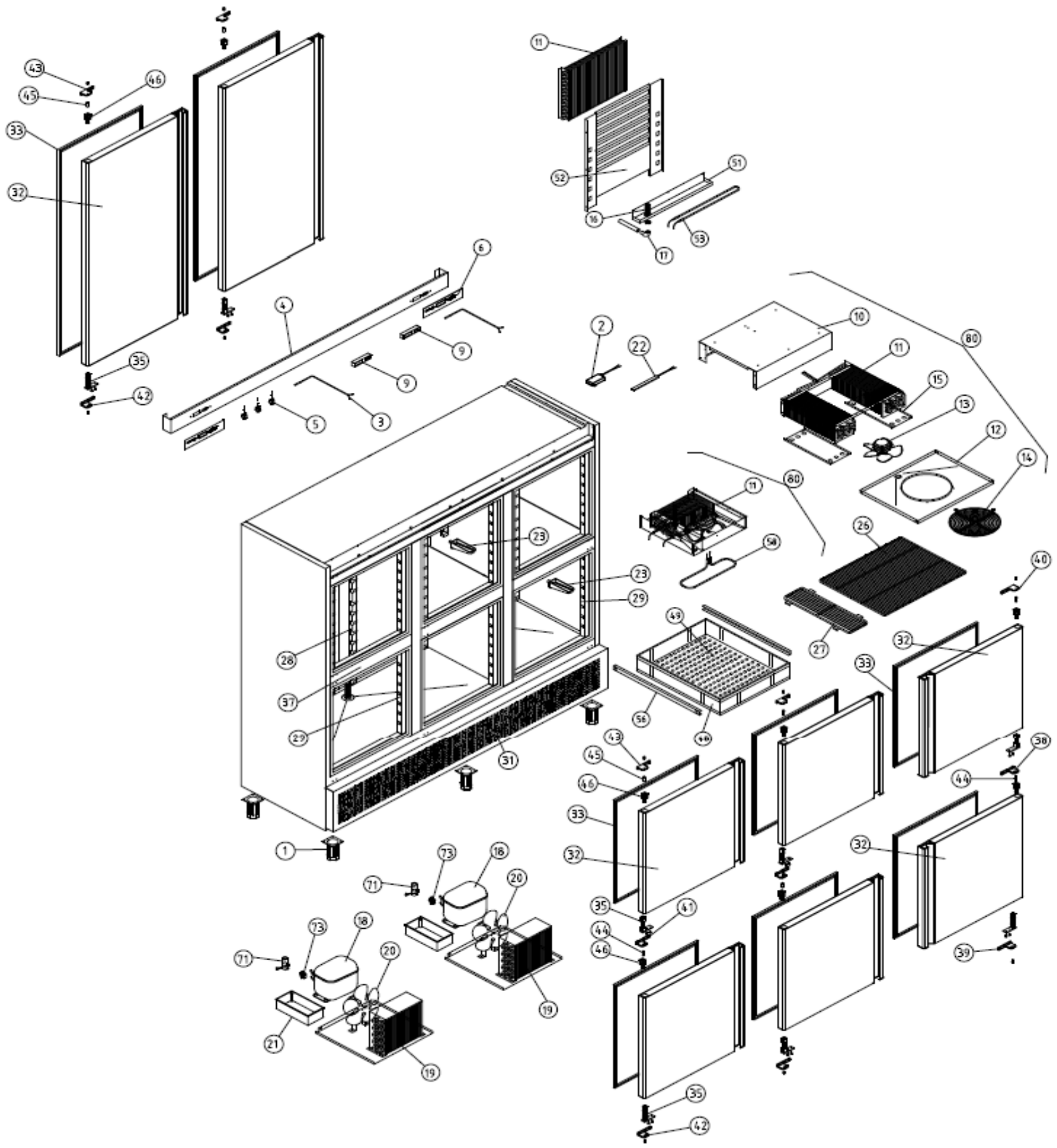

ARMARIO SNACK DE REFRIGERACIÓN CONCEPT / SNACK CABINET COOLING CONCEPT

CAFP-2103 / CAFP-2104 / CAFP-2105 / CAFP-2106

CAEP-2103

FAGOR

Versión 2014-10

Nº	CODE CÓDIGO	RECOM.	DESCRIPCIÓN	DESCRIPTION	CAFP-2103	CAFP-2104	CAFP-2105	CAFP-2106	CAEP-2103
1	12033566		PATA REGULABLE ARM.GASTRO	GASTRO CABINET ADJUSTABLE LEG	6	6	6	6	6
2	12103609		FUENT APV-16-24 115-230 50/60Hz 24V 16W	APV-16-24 115-230 50/60Hz 24V 16W SOURCE	1	1	1	1	1
3	12045530		SONDA NTC 2,5 MTS	THERMOSTAT PROBE	1	1	1	1	1
4	12116110		CABEZA AFP-2103 CONCEPT	HEAD AFP-2103 CONCEPT	1	1	1	1	1
5	12036888		MICROR.CONMUT.E3111CA	MICROR.CONMUT.E3111CA	3	3	3	3	3
6	12104752		ADHESIVO G. CONCEPT PWC	PWC CONCEPT RANGE STICKER	1	1	1	1	1
9	12043611		TERMOSTATO POWER COMPAC REFRIG	POWER COOLING THERMOSTAT COMPAC	1	1	1	1	1
10	12070031		SOP.CARC.VENTIL.AFP-2100 COMP.	SOP.CARC.VENTIL.AFP-2100 COMP.	1	1	1	1	1
11	12044960		2XBAT.4T6R350A6S PINT.	2XBAT.4T6R350A6S PINT.	1	1	1	1	1
12	12047175		SUJ.VENT.AFP-2100 COMPACT	SUJ.VENT.AFP-2100 COMPACT	1	1	1	1	1
13	12047387		VENT.EVAP.10W S/ARO S/PATAS	FAN EVAPORATOR 10w	1	1	1	1	1
14	12050280		REJILLA VENT.D297 PINTADA	GRILL FAN Ø 297 PAINTED	1	1	1	1	1
15	12070033		CUBRER.2BAT4T6R350A 6S AFN1400	CUBRER.2BAT4T6R350A 6S AFN1400	2	2	2	2	2
18	12067476		COMPR.NEK-6214-Z 220V 50HZ	COMPR.NEK-6214-Z 220V 50HZ	1	1	1	1	1
19	12031310		CONDENSADOR 10x4 TECHO	CONDENSADOR 10x4 TECHO	1	1	1	1	1
20	12033477		VENT. 10w H84 Ø254 22º	FAN 10w H84 Ø254 22º	1	1	1	1	1
21	12036623		BANDEJA EVAPORACIÓN AUTOMÁTICA	BANDEJA EVAPORACIÓN AUTOMÁTICA	1	1	1	1	1
22	12117149		TIRA LED T3-270-3014-868.16-CW24V DC 2mt	LED T3-270-3014-868.16-CW24V DC 2mt	3	3	3	3	3
23	12037375		CANALIZADOR AGUA 150 GRIS REFRIGERACION	REFRIGERATION GREY 150 WATER DRAINAGE	1	1	1	1	1
26	12034317		PARRILLA 560X542 AR.SNACK	GRILL 560X542 AR.SNACK	9	9	9	9	9
27	12037946		PARRILL.500X154SUPL.SNACK	GRILL 500X154 SUPL. SNACK	6	6	6	6	6
28	12034579		CREMALL.INT.AFP-SNACK	CREMALL.INT.AFP-SNACK	6	6	6	6	6
29	12034241		CREMALL.DEL.DCH.AFP-SNACK	CREMALL.DEL.DCH.AFP-SNACK	3	2	1		3
29	12034240		CREMAL.DEL.IZD.AFP-SNACK	CREMAL.DEL.IZD.AFP-SNACK	3	2	1		3
29	12035502		CREM.DELANT.DCH.PEQ.AFP	CREM.DELANT.DCH.PEQ.AFP		2	4	6	
29	12035504		CREM.DELANT.IZD.PEQ.AFP	CREM.DELANT.IZD.PEQ.AFP		2	4	6	
31	12069220		REJILLA GRUPO AFP-2100 CONCEPT	GRID GROUP AFP-2100 CONCEPT	1	1	1	1	1
32	12083604		PUE PEQ AFP/AFN CONCEPT IZD	PUE PEQ AFP/AFN CONCEPT IZD			2	4	
32	12049573		PUE PEQ AFP/AFN CONCEPT DCHA	PUE PEQ AFP/AFN CONCEPT DCHA		2	2	2	
32	12083602		PUE CARN AFP/AFN CONCEPT IZD	PUE CARN AFP/AFN CONCEPT IZD	2	2	1		
32	12083603		PUE CARN AFP/AFN CONCEPT DCHA	PUE CARN AFP/AFN CONCEPT DCHA	1				
33	12038148		BURLETE PUERTA 1457X636	DOOR GASKET 1457x636	3	2	1		3
33	12038144		BURLETE PUERTA 691X636	DOOR GASKET 691x636		2	4	6	
35	12038130		BIS.TRS1D DOBL MUELLE DV-2608	BIS.TRS1D DOBL MUELLE DV-2608	3	4	5	6	3
37	12083394		FRONTI HORZ.POST.AFP MAGNETICO	MAGNETIC HORZ.POST.AFP FRONTI		1	2	3	
38	12037088		SOP.BISAG.INF DCH. FRES	SOP.BISAG.INF DCH. FRES		1	1	1	
39	12037017		SOP.BISAG.INF.DCH.	SOP.BISAG.INF.DCH.	1	1	1	1	1
40	12041472		SOP.BISAG.SUP.DCH	SOP.BISAG.SUP.DCH	1	1	1	1	1
41	12036776		SOP.BISAG. INF IZQ. FRES	SOP.BISAG. INF IZQ. FRES			1	2	
42	12036986		SOP.BISAG.INF.IZD.	SOP.BISAG.INF.IZD.	2	2	2	2	2
43	12041474		SOP. BISAG.SUP.IZD	SOP. BISAG.SUP.IZD	2	2	2	2	2
44	12037138		EJE ROSCA EXT.30X10INOX	THREADED SHAFT EXT.30X10INOX		1	2	3	
45	12038076		EJE30x10VARIL INOX ROSC.INT M6	SUP HUB. 30x10 ROD DOORS INOX.INT. M-6	3	3	3	3	3
46	12037723		CAJA ALOJAMIENTO MUELLE GRIS	GREY SPRING HOUSING BOX	3	4	5	6	3
60	12045918		PUERTA CRISTAL ARM. CARNICERA	GLASS DOOR ARM. BUTCHER					3
62	12068289		TIRAD. PT. CRISTAL	GLASS DOOR HANDLE					3
71	12088817		CONDS.ARRANQUE NEK-6214-Z 220V	CONDS.ARRANQUE NEK-6214-Z 220V	1	1	1	1	1
73	12088816		RELE ARRANQUE NEK-6214-Z 220V	RELAY ARRANQUE NEK-6214-Z 220V	1	1	1	1	1
80	12083676		UD.EVAP.AFP-2100 COMPACTO	UD.EVAP.AFP-2100 COMPACTO	1	1	1	1	1

ARMARIO SNACK DE REFRIGERACIÓN CONCEPT / SNACK CABINET COOLING CONCEPT

CAF-2104 C / CAF-2105 C / CAF-2106 C

CAF-2104 P / CAF-2105 P / CAF-2106 P

FAGOR

Versión 2014-10

Nº	CODE CÓDIGO	RECOM.	DESCRIPCIÓN	DESCRIPTION	CAF-2104 C	CAF-2105 C	CAF-2106 C	CAF-2104 P	CAF-2105 P	CAF-2106 P
1	12033566		PATA REGULABLE ARM.GASTRO	GASTRO CABINET ADJUSTABLE LEG	6	6	6	6	6	6
2	12103609		FUENT APV-16-24 115-230 50/60Hz 24V 16W	APV-16-24 115-230 50/60Hz 24V 16W SOURCE	1	1	1	1	1	1
3	12045530		SONDA NTC 2,5 MTS	THERMOSTAT PROBE	2	2	2	2	2	2
4	12116150		CABEZA AF-2103 C/P CONCEPT	HEAD AF-2103 C/P CONCEPT	1	1	1	1	1	1
5	12036888		MICROR.CONMUT.E3111CA	MICROR.CONMUT.E3111CA	3	3	3	3	3	3
6	12104752		ADHESIVO G. CONCEPT PWC	PWC CONCEPT RANGE STICKER	2	2	2	2	2	2
9	12043611		TERMOSTATO POWER COMPAC REFRIG	POWER COOLING THERMOSTAT COMPAC	1	1	1	1	1	1
9	12040693		TERMOSTATO POWER COMPAC CONG.	FREEZER POWER COMPACT THERMOSTAT	1	1	1	1	1	1
10	12070031		SOP.CARC.VENTIL.AFP-2100 COMP.	SOP.CARC.VENTIL.AFP-2100 COMP.	1	1	1	1	1	1
11	12030935		EV.B14T2R426A6S DPTO.PESC PIN.	EV.B14T2R426A6S DPTO.PESC PIN.	1	1	1			
11	12044960		2XBAT.4T6R350A6S PINT.	2XBAT.4T6R350A6S PINT.	1	1	1	1	1	1
11	12068165		EV.COMP.FC-61B AR.C/T CONG IZD	EV.COMP.FC-61B AR.C/T CONG IZD				1	1	1
12	12047175		SUJ.VENT.AFP-2100 COMPACT	SUJ.VENT.AFP-2100 COMPACT	1	1	1	1	1	1
13	12047387		VENT.EVAP.10W S/ARO S/PATAS	FAN EVAPORATOR 10w	1	1	1	1	1	1
14	12050280		REJILLA VENT.D297 PINTADA	GRILL FAN Ø 297 PAINTED	1	1	1	1	1	1
15	12070033		CUBRER.2BAT4T6R350A 6S AFN1400	CUBRER.2BAT4T6R350A 6S AFN1400	2	2	2	2	2	2
16	12037617		DESAGÜE 1/2 PULG. CUELLO CORTO	DRAIN 1/2 PULG.	1	1	1			
17	12037541		CODO PVC MIXTO 90º 20x1/2	CODO PVC MIXTO 90º 20x1/2	1	1	1			
18	12067476		COMPR.NEK-6214-Z 220V 50HZ	COMPR.NEK-6214-Z 220V 50HZ	1	1	1	1	1	1
18	12059107		COMPR. TL-5-G R134A	COMPR. TL-5-G R134A	1	1	1			
18	12028143		COMPR.SC-12-CL R404A	COMPR.SC-12-CL R404A				1	1	1
19	12031310		CONDENSADOR 10x4 TECHO	CONDENSADOR 10x4 TECHO	1	1	1	1	1	1
19	12031472		CONDENSADOR 10X4 NEUTRO	CONDENSADOR 10X4 NEUTRO				1	1	1
19	12033007		CONDENSADOR 8X2 REF.C CT82DG	CONDENSADOR 8X2 REF.C CT82DG	1	1	1			
20	12033477		VENT. 10w H84 Ø254 22º	FAN 10w H84 Ø254 22º	1	1	1	2	2	2
20	12059041		VENT 5W H72 Ø200 28º	FAN 5w H72 Ø200 28º	1	1	1			
21	12036623		BANDEJA EVAPORACIÓN AUTOMÁTICA	BANDEJA EVAPORACIÓN AUTOMÁTICA				2	2	2
22	12117149		TIRA LED T3-270-3014-868.16-CW24V DC 2mt	LED T3-270-3014-868.16-CW24V DC 2mt	3	3	3	3	3	3
23	12037375		CANALIZADOR AGUA 150 GRIS REFRIGERACION	REFRIGERATION GREY 150 WATER DRAINAGE	1	1	1	1	1	1
23	12037314		CANALIZADOR AGUA 150 NEGRO MANT.CONGEL.	FREEZER BLACK 150 WATER DRAINAGE				1	1	1
26	12034317		PARRILLA 560X542 AR.SNACK	GRILL 560X542 AR.SNACK	7	7	7	7	7	7
27	12037946		PARRILL.500X154SUPL.SNACK	GRILL 500X154 SUPL. SNACK	4	4	4	4	4	4
28	12034579		CREMALL.INT.AFP-SNACK	CREMALL.INT.AFP-SNACK	4	4	4	4	4	4
28	12036498		CREMALL.INT.DPTO.AF-702-C	CREMALL.INT.DPTO.AF-702-C				2	2	2
28	12035898		CREMAL.INT.PEQ.EXT.DPTO	CREMAL.INT.PEQ.EXT.DPTO	2	2	2	2	2	2
29	12034241		CREMALL.DEL.DCH.AFP-SNACK	CREMALL.DEL.DCH.AFP-SNACK	2	1		2	1	
29	12034240		CREMAL.DEL.IZD.AFP-SNACK	CREMAL.DEL.IZD.AFP-SNACK	2	1		2	1	
29	12035502		CREM.DELANT.DCH.PEQ.AFP	CREM.DELANT.DCH.PEQ.AFP	1	3	5	1	3	5
29	12035504		CREM.DELANT.IZD.PEQ.AFP	CREM.DELANT.IZD.PEQ.AFP	1	3	5	1	3	5
29	12069643		CREM. DCHA. DPTO PESCADO 2100	CREM. DCHA. DPTO PESCADO 2100	1	1	1	1	1	1
29	12069642		CREM. IZDA DPTO. PESCADO 2100	CREM. IZDA DPTO. PESCADO 2100	1	1	1	1	1	1
31	12069220		REJILLA GRUPO AFP-2100 CONCEPT	GRID GROUP AFP-2100 CONCEPT	1	1	1	1	1	1
32	12083604		PUE PEQ AFP/AFN CONCEPT IZD	PUE PEQ AFP/AFN CONCEPT IZD		2	4		2	4
32	12049573		PUE PEQ AFP/AFN CONCEPT DCHA	PUE PEQ AFP/AFN CONCEPT DCHA	2	2	2	2	2	2
32	12083602		PUE CARN AFP/AFN CONCEPT IZD	PUE CARN AFP/AFN CONCEPT IZD	2	1		2	1	
33	12038148		BURLETE PUERTA 1457X636	DOOR GASKET 1457x636	2	1		2	1	
33	12038144		BURLETE PUERTA 691X636	DOOR GASKET 691x636	2	4	6	2	4	6
35	12038130		BIS.TRS1D DOBL MUELLE DV-2608	BIS.TRS1D DOBL MUELLE DV-2608	4	5	6	4	5	6
37	12083394		FRONTI HORZ.POST.AFP MAGNETICO	MAGNETIC HORZ.POST.AFP FRONTI		1	2		1	2
38	12037088		SOP.BISAG.INF DCH. FRES	SOP.BISAG.INF DCH. FRES	1	1	1	1	1	1
39	12037017		SOP.BISAG.INF.DCH.	SOP.BISAG.INF.DCH.	1	1	1	1	1	1
40	12041472		SOP.BISAG.SUP.DCH	SOP.BISAG.SUP.DCH	1	1	1	1	1	1
41	12036776		SOP.BISAG. INF IZQ. FRES	SOP.BISAG. INF IZQ. FRES		1	2		1	2
42	12036986		SOP.BISAG.INF.IZD.	SOP.BISAG.INF.IZD.	2	2	2	2	2	2
43	12041474		SOP. BISAG.SUP.IZD	SOP. BISAG.SUP.IZD	2	2	2	2	2	2
44	12037138		EJE ROSCA EXT.30X10INOX	THREADED SHAFT EXT.30X10INOX	1	2	3	1	2	3
45	12038076		EJE30x10VARIL INOX ROSC.INT M6	SUP HUB. 30x10 ROD DOORS INOX.INT. M-6	3	3	3	3	3	3
46	12037723		CAJA ALOJAMIENTO MUELLE GRIS	GREY SPRING HOUSING BOX	4	5	6	4	5	6
48	12033784		CUBETA DPTO CONGEL.530X540	TRAY DEPT CONGEL.530X540				3	3	3
48	12033758		CUBETA DPTO PESCADO 530x460	TRAY DEPT FISH 530X460	3	3	3			
49	12034642		FOND.PERF.CUB.DPTO.530X460 AFP-SNACK	FOND.PERF.CUB.DPTO.530X460 AFP-SNACK	3	3	3			
51	12035779		BANDEJA GOTEO DPTO.PESCADO	DRIP TRAY DPTO. FISH	1	1	1			
52	12069485		DUELAS DPTO.PESC.2100	SLAT DPTO. PESC. 2100	1	1	1			
53	12033255		RESIST.DESES.DEP.PESC.220V425W	RESIST.DESES.DEP.PESC.220V425W	1	1	1			
54	12035749		RESIST.MARCO PUERTA INF.28W	RESIST.MARCO PUERTA INF.28W				1	1	1
56	12037936		GUIA SNACK DPTO CONGEL.562mm	GUIDE SNACK DPTO CONGEL. 562 mm				6	6	6
56	12036880		GUIA SNACK DPTO.PESCADO 519mm	GUIDE SNACK DPTO FISH 519 mm	6	6	6			
58	12035911		RESIST.BANDEJA DEPART.18W	RESIST.BANDEJA DEPART.18W				1	1	1

71	12018649		CONDEN.ARRANQUE SC-117U5017 80 mF	CONDEN.ARRANQUE SC-117U5017 80 mF				1	1	1
71	12033999		CONDEN.ARRANQUE TL-G 17U5014 60 mF	CONDEN.ARRANQUE TL-G 17U5014 60 mF	1	1	1			
71	12088817		CONDS.ARRANQUE NEK-6214-Z 220V	CONDS.ARRANQUE NEK-6214-Z 220V	1	1	1	1	1	1
73	12035096		RELE ARRANQUE COMPRESOR SC-12CL	RELAY ARRANQUE COMPRESOR SC-12CL				1	1	1
73	12034981		RELE ARRANQUE COMPRESOR TL-5G 6000	RELAY ARRANQUE COMPRESOR TL-5G 6000	1	1	1			
73	12088816		RELE ARRANQUE NEK-6214-Z 220V	RELAY ARRANQUE NEK-6214-Z 220V	1	1	1	1	1	1
80	12083676		UD.EVAP.AFP-2100 COMPACTO	UD.EVAP.AFP-2100 COMPACTO	1	1	1	1	1	1
80	12083675		UD.EV.AF1400C,2100C CONG.COMP.	UD.EV.AF1400C,2100C CONG.COMP.				1	1	1