BLAST CHILLER / ABATIDORES DE TEMPERATURA

Versión 00 06/2014

ATA-061

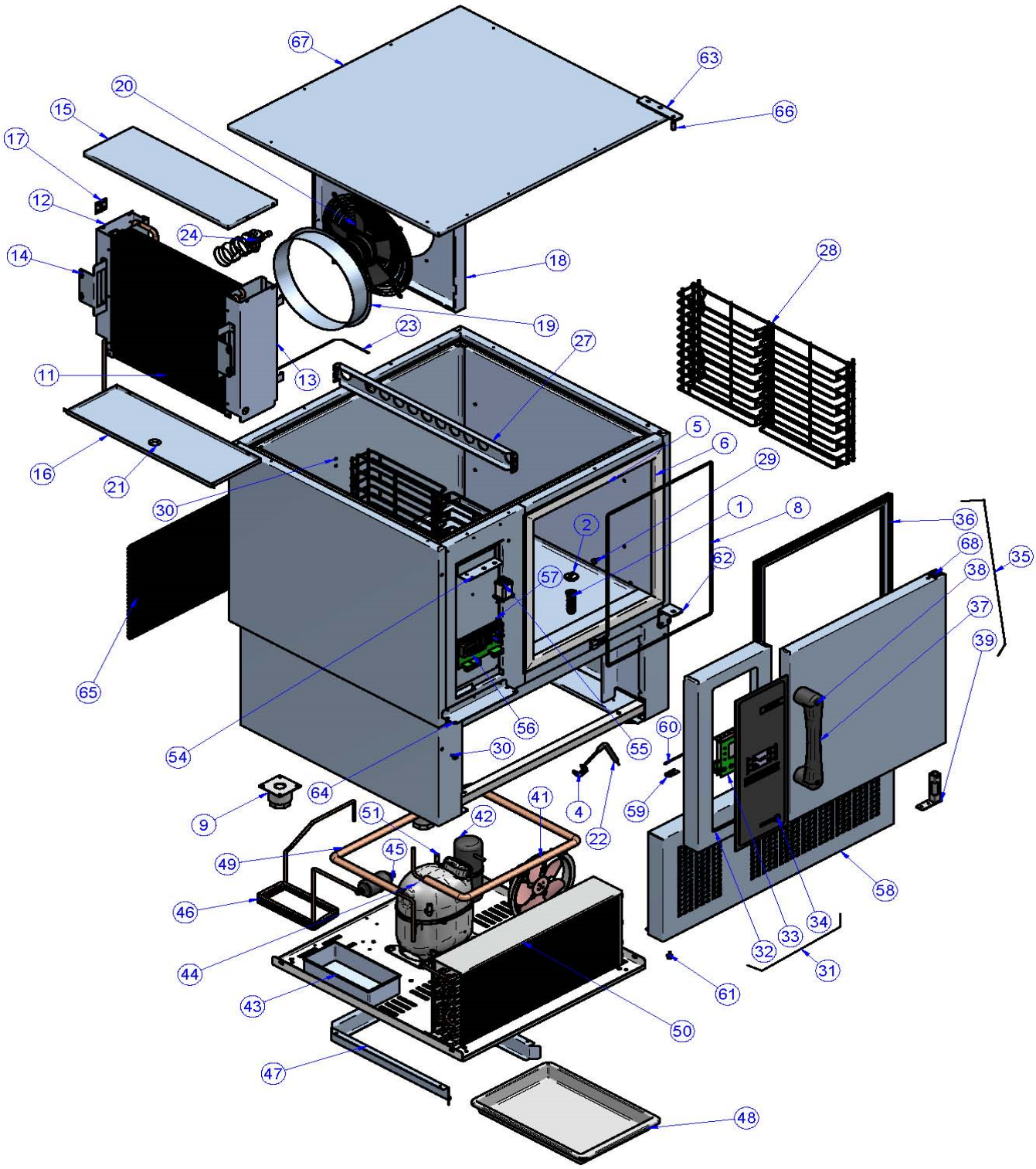

BLAST CHILLER / ABATIDORES DE TEMPERATURA

ATA-061

Versión 00 06/2014

Nº	CODE CÓDIGO	RECOM.	DESCRIPTION	DESCRIPCIÓN	ATA-061
1	12037489		DESAG COMPL 3/4 GRIS+TUERCA	DESAG COMPL 3/4 GRIS+TUERCA	1
2	12066749		CAP DRAIN 3/4	TAPON GRIS DESAG.1100 ABS 3/4	1
3	12037891		RUBBER GASKET DRAIN 3/4	JUNTA GOMA DESAGÜE 3/4	1
4	12069406		SUPPORT HEART PROBE BC	SOPORTE SONDA PINCHO ATM	1
5	12096459		COVER MAGNETIC 542/45º HOR.MAG.ATA	TAPETA 542/45º HOR.MAG.ATA	2
6	12096499		COVER MAGNETIC 599/45º ATA	TAPET VERT.MAR.MAG.599/45º ATA	2
7	11001332		MAGNETIC PROFILE	IMAN TAPETA PERFIL MARCO MAGN.	2
8	12036189		DOOR RESISTANCE ATM 48W	RESIST.MARCO ATM 48W	1
9	12043729		ADJUSTABLE LEG 65/88	PATA REGULABLE 65/88	4
11	12096511		EVAPORATOR 18T3R435A5S ATA-061	EVAPOR.18T3R435A5S ATA-061	1
12	12096512		COVER RIGHT ELBOW ATA-061	CUBRE-CODO DCHO EV.ATA-061	1
13	12096513		COVER LEFT ELBOW ATA-061	CUBRE-CODO IZDO EV.ATA-061	1
14	12069597		EVAPORATOR SUPPORT 081	SOPORTE EVAPORADOR 081	2
15	12069588		COVER BOX EVAPORATOR 081	TAPA CAJA EVAPORADOR 081	1
16	12069595		DRAIN TRAY EVAP.081	BANDEJA DESAG.EVAPORADOR 081	1
17	12068285		STEEL HINGE 40x40x1	BISAGRA INOX 40X40X1	2
18	12096514		EVAPORATOR FAN SUPPORT ATA-061	SOPORT VENTIL EVAP. ATA-061	1
19	12034103		INTERIOR FAN PROTECTION	PROTECC.VENT.INT.ATM	1
20	12026785		FAN.ATM D300 220V 50/60 C.2MF	VENT.ATM D300 220V 50/60 C.2MF	1
21	12037642		DRAIN 1/2"	DESAG COMPL1/2 LARGO+TUERCA	1
22	12029718		HEART PROBE ATM	SONDA PINCHO CAR.ATM	1
23	12045530		PROBE NTC 2.5MT	SONDA NTC 2,5 MTS(NTC025HP00)	2
24	12067627		EXPANSION VALVE 068Z3430 MOP50	VALV.EX.068Z3430 MOP50/-10 ATM	1
25	12067628		HOLE-02 R.0682092 081	ORIFIC-02 R.0682092 081	1
26	12037263		DRAIN PIPE D.INT=17MM	TUBO DESAG. BUFLEX D. INT=17MM	1
27	12096219		SUPPORT ATA-101	SOPORTE CREMALLERA ATA-101	2
28	12096520		TRAY SUPPORT ATA-061	CREMALLERA ATA-061	2
29	12068089		BOLT FIXING SUPPORT TRAY 051	PERNO FIJ.CREMALLE 051	8
30	12068090		BOLT FIXING COVER 051	PERNO FIJ.REJILLA 051	11
32	12096687		CONTROL PANEL ATA-061	CUADRO DE MANDOS SOLD.ATA-061	1
33	12125226		DISPL.EVFTFT818 S/TOUCH PROG.ATA-061/101	DISPL.EVFTFT818 S/TOUCH PROG.ATA-061/101	1
34	12096288		TOUCH EVC80T00X0XXX04 FAGOR	TOUCH EVC80T00X0XXX04 FAGOR	1
35	12096525		CJ.DOOR ATA-061	CJ.PUERTA ATA-061	1
36	12096529		LOCK PROFILE 570x520 ATA-061	BURLETE 570x520 ATA-061	1
37	12091660		DOOR HANDLE ATA	ASA PUERTA ABATIDOR ATA	1
38	12091705		CAP HANDLE ATA	TAPON ASA ATA NEGRO	2
39	12038130		BIS.TRS1D DOBL SPRING DV-2608	BIS.TRS1D DOBL MUELLE DV-2608	1
41	12038161		FAN ARO.10W 230V D200 FC-62B	VENT ARO.10W 230V D200 FC-62B	2
42	12068590		LIQUID TANK 0.88 L 101	DEPOS.LIQ.0.88 LITR ATM-101VCH	1
43	12036623		EVAPORATION AUTOMATIC TRAY	BANDEJA EVAPORACION AUTOMÁTICA	1
44	12025931		COMPR.J-2192-GK R404A	COMPR.J-2192-GK R404A	1
45	12032655		FILTER.DESH.DCL083S 401727 3/8	FILTR.DESH.DCL083S 401727 3/8	1
46	12068622		AUTOMATIC EVAPORATION PIPE	EVAPORAC.AUTOM.ATM-081 PINTADA	1
47	12096301		DRAIN TRAY GUIDE ATA	GUIA BANDEJA DESAG.ATA	1
48	12046294		WATER TRAY	BANDEJA BOTELLERO	1
49	12103358		EXCHANGER ATA-061	INTERCAMBIADOR ATA-061	1
50	12068193		CONDENSAT.11T4R600A2S 081	CONDENSAD.11T4R600A2S /081	1
51	12037369		LOAD VALVE RF.HB-1S	VALVULA OBUS COMPLETA RF.HB-1S	1
52	12067620		PRESSURE SWICHT 051	PRESOSTATO 051	1
53	12096067		ELECTRICAL INSTAL.ATA-061	INSTAL.ELECTRICA ATA-061	1
54	12096382		SUPPORT ELECTRICAL INSTAL.ATA-061	SOPORTE INSTALACION ELECTRICA ATA	1
55	12033148		RELAY 25A 220v	RELÉ 25A 220v	1
56	12096287		CONTROL BOARD.EVFTFT818	PLACA POT.EVFTFT818	1
57	12096478		SUPPORT BOARD TERMOS.EVFTFT	SOPORTE PLACA TERMOST.EVFTFT	4
58	12096539		COVER ATA-061	REJILLA ATA-061 SOLDAD	1

BLAST CHILLER / ABATIDORES DE TEMPERATURA

ATA-061

Versión 00 06/2014

Nº	CODE CÓDIGO	RECOM.	DESCRIPTION	DESCRIPCIÓN	ATA-061
59	12024066		TIE BREAKER MAGNETIC	AMARRE INTERRUPTOR MAGNETICO	1
60	12024477		MAGNETIC SWICHT	INTERRUPTOR MAGNETICO	1
61	12068088		GRIP NUT 051	POMO DE AGARRE REJ.051	2
62	12069649		HINGE SUPPORT 051	SOPORTE BISAGRA ATM-051 VCH	1
63	12096232		HINGE SUPPORT TOP 051	SOPORTE SUPERIOR PUERTA ATA	1
64	12096436		CONTROL PANEL SUPPORT ATA-101	SOPORTE CUADRO DE MANDOS ATA-101	1
65	12096546		COVER BACK ATA-061	REJILLA TRASERA ATA-061	1
66	12038076		AXIS 30x10 INOX ROSC.INT M6	EJE30x10VARIL INOX ROSC.INT M6	1
67	12096543		EXTERIOR TOP ATA-061	TECHO EXTERIOR ATA-061	1
68	12037723		BOX SPRING LODGING	CAJA ALOJAMIENTO MUELLE GRIS	1
69	12088807		BLOQUE ARRANQUE J2192GK 50HZ	BLOQUE ARRANQUE J2192GK 50HZ	1

Notes: