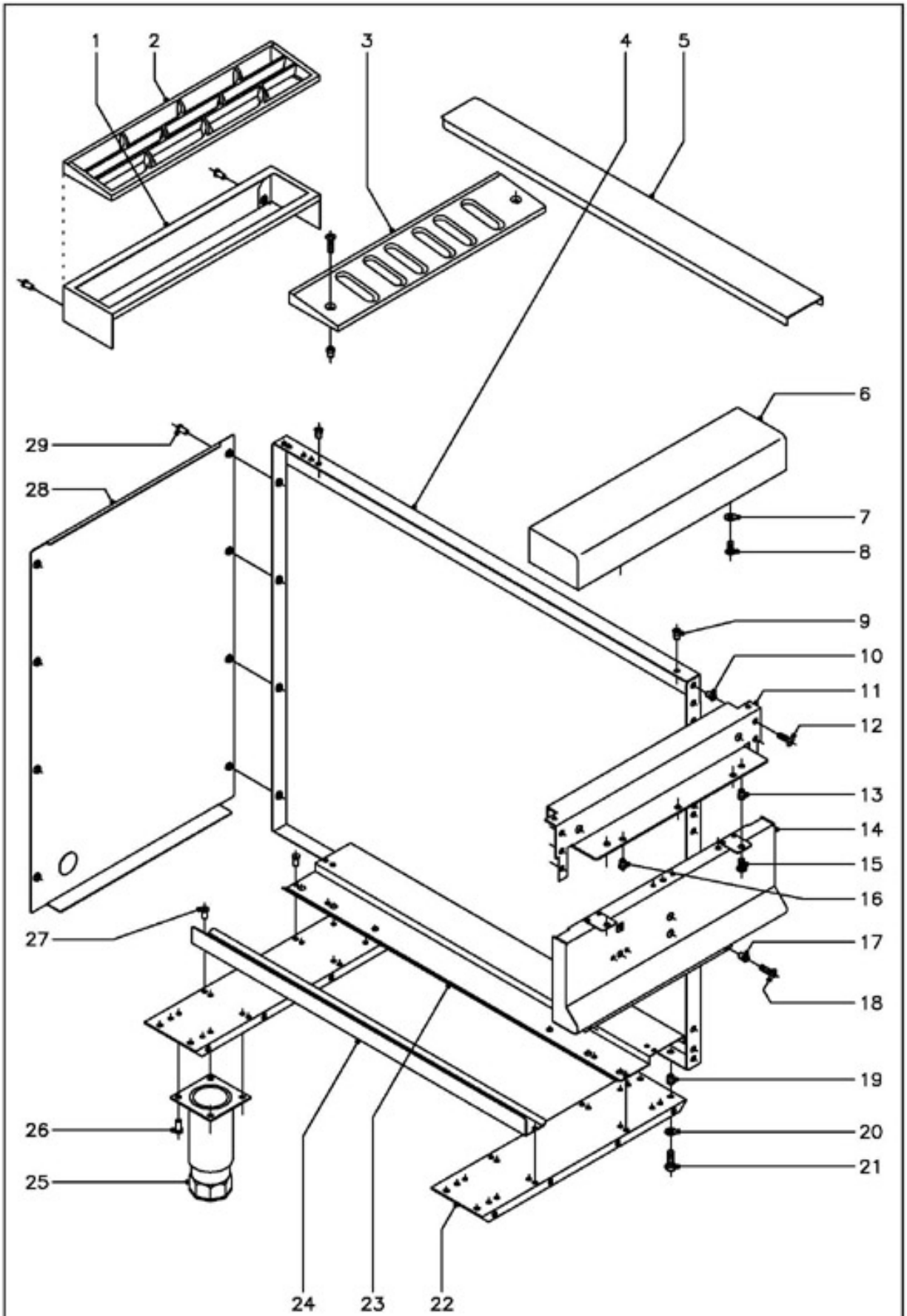

1	R205429
	Q419005
2	R205425
3	R205426
	Q072035
	Q221342
4	X162811
s/n	X162810
5	X176100
6	X165400
6	R165431
7	Q302022
8	Q152004
9	Q221342
10	Q221342
11	X162667
11	R162613
12	Q152004
13	Q221342
14	X162803
14	X172801
15	Q152004
16	Q221342
17	Q221342
18	Q152004
19	Q221343
20	Q302022
21	Q012042
22	R212650
22	X172630
23	X162635
24	X162636
25	X260150
26	Q411304
27	Q411304
28	X162812
28	X172803
29	Q419005

Nº plano	Firma	Fecha	Aparato	Lamina	
C-1000		3-2001	MUEBLE FREIDORAS 900 (AL SUELO)	1	Fagor Industrial S.Coop. FAGOR Oñate

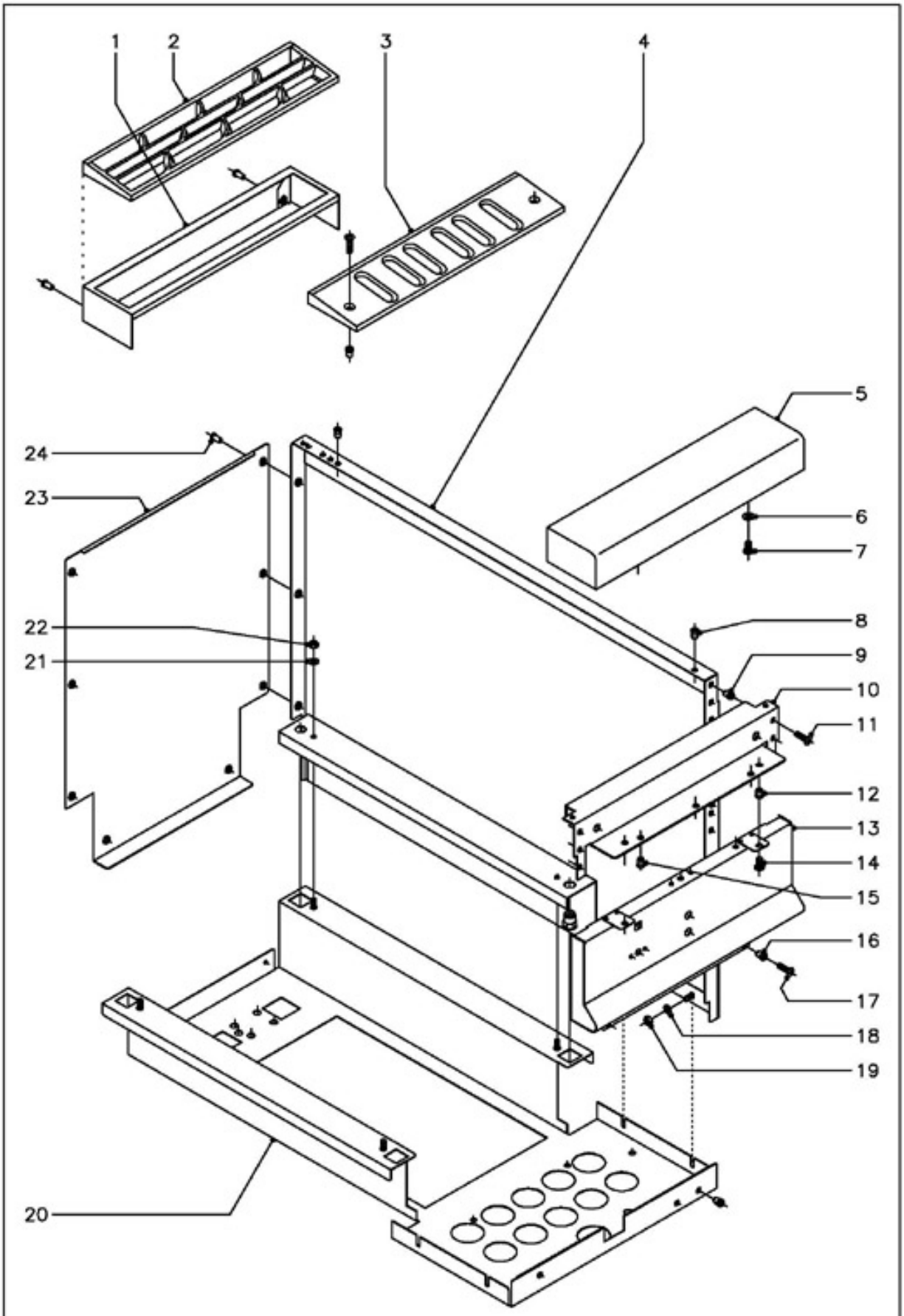

1	R205429
	Q419005
2	R205425
3	R205426
	Q072035
	Q221342
4	X192805
s/n	X192803
5	X165400
6	Q302022
7	Q152004
8	Q221342
9	Q221342
10	X162667
11	Q152004
12	Q221342
13	X162803
14	Q152004
15	Q221342
16	Q221342
17	Q152004
18	Q302022
19	Q162030
20	X192808
21	Q302022
22	Q162040
23	X192807
24	Q419005

N plano	Firma	Fecha	Aparato	Lamina	
C-1001		3-2001	MUEBLE FREIDORAS 900 (SUSPENDIDAS)	2	Fagor Industrial S.Coop. FAGOR Oñate

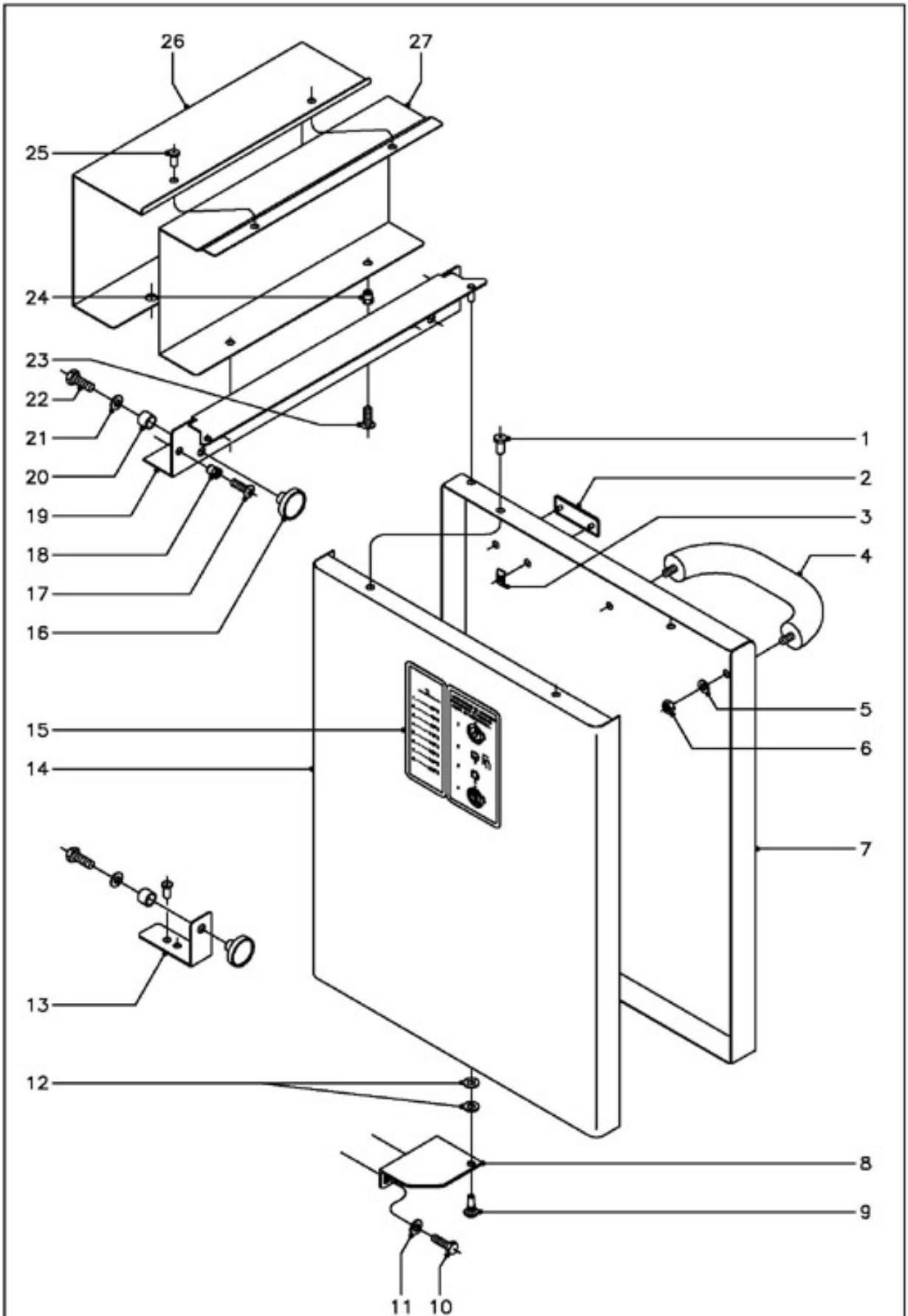

1	Q419005
2	U262806
3	Q221023
4	Z400540
5	Q302022
6	Q162030
7	X190502
s/n	X170504
7	X190502
8	E022608
s/n	E022607
8	X190504
9	X960504
10	Q012042
10	Q152004
11	Q302022
12	Q232040
13	X172603
	Q419005
14	X160532
14	X190503
15	X166511
16	X960501
17	Q152004
18	Q221342
19	X162669
s/n	X172602
20	X960502
21	Q232020
22	Q012021
23	Q152004
24	Q221342
25	Q419005
26	X162654
27	X162653

N plano	Firma	Fecha	Aparato		Lamina	
C-1002		3-2001	PUERTA FREIDORAS 900		3	Fagor Industrial S.Coop. FAGOR Oñate

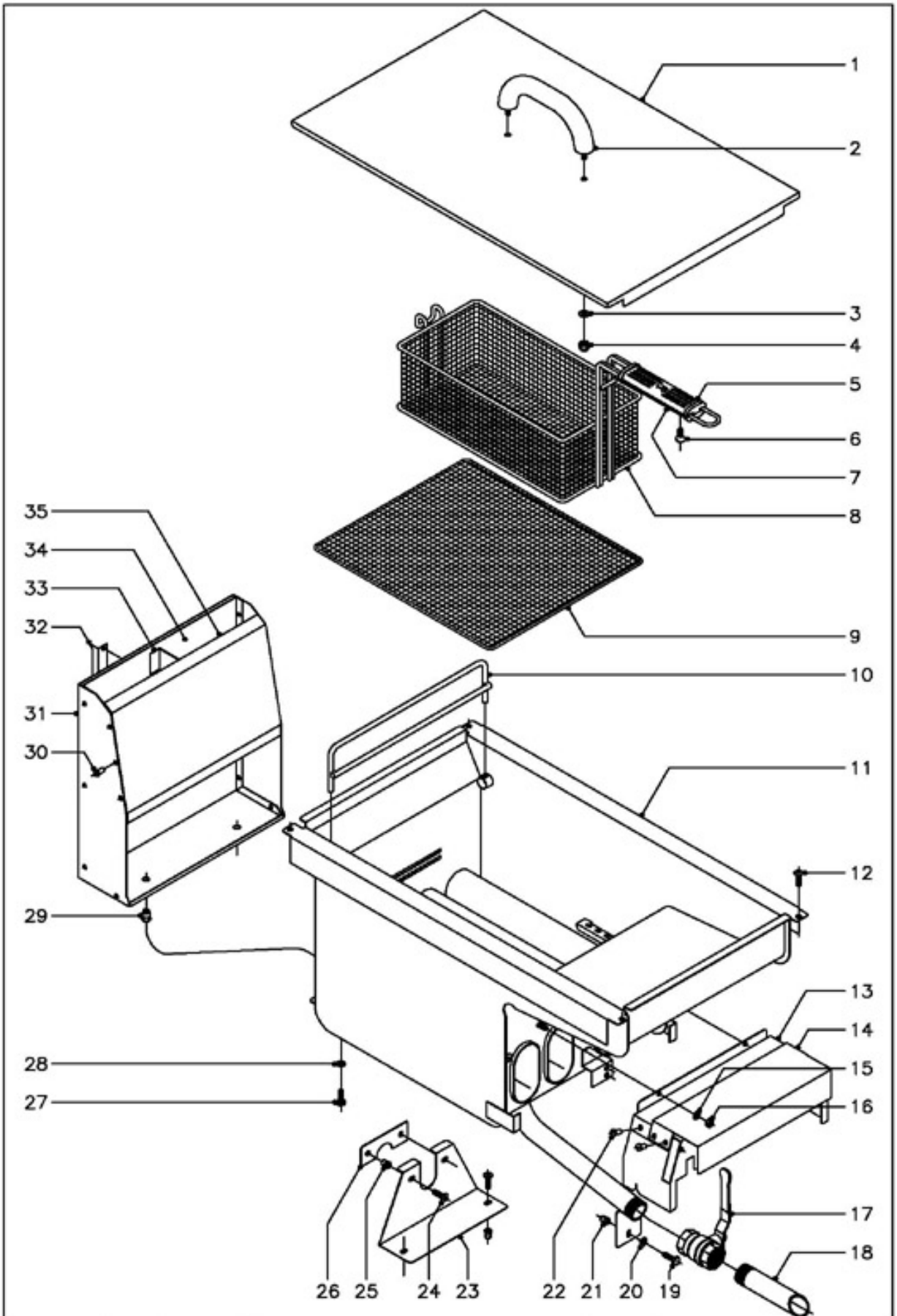

1	X166141
1	X186111
2	Z400540
3	Q302022
4	Q212031
5	9616402
6	Q042031
7	9616401
8	X066590
8	X066595
9	X166522
9	X186522
10	X166500
11	X166124
11	X186107
12	Q152004
13	X162655
14	X162656
15	Q302022
16	Q162040
17	X036107
18	X166134
19	Q012043
20	Q302022
21	Q221343
22	Q419005
23	X182618
23	X182619
24	Q152004
25	Q221342
26	X186112
27	Q012041
28	Q302022
29	Q221343
30	Q419005
31	X162651
32	U565611
33	X162658
34	X162652
35	X162650

N plano	Firma	Fecha	Aparato		Lamina	
C–1003		3–2001	CUBA FREIDORAS 900		4	Fagor Industrial S.Coop. FAGOR Oñate

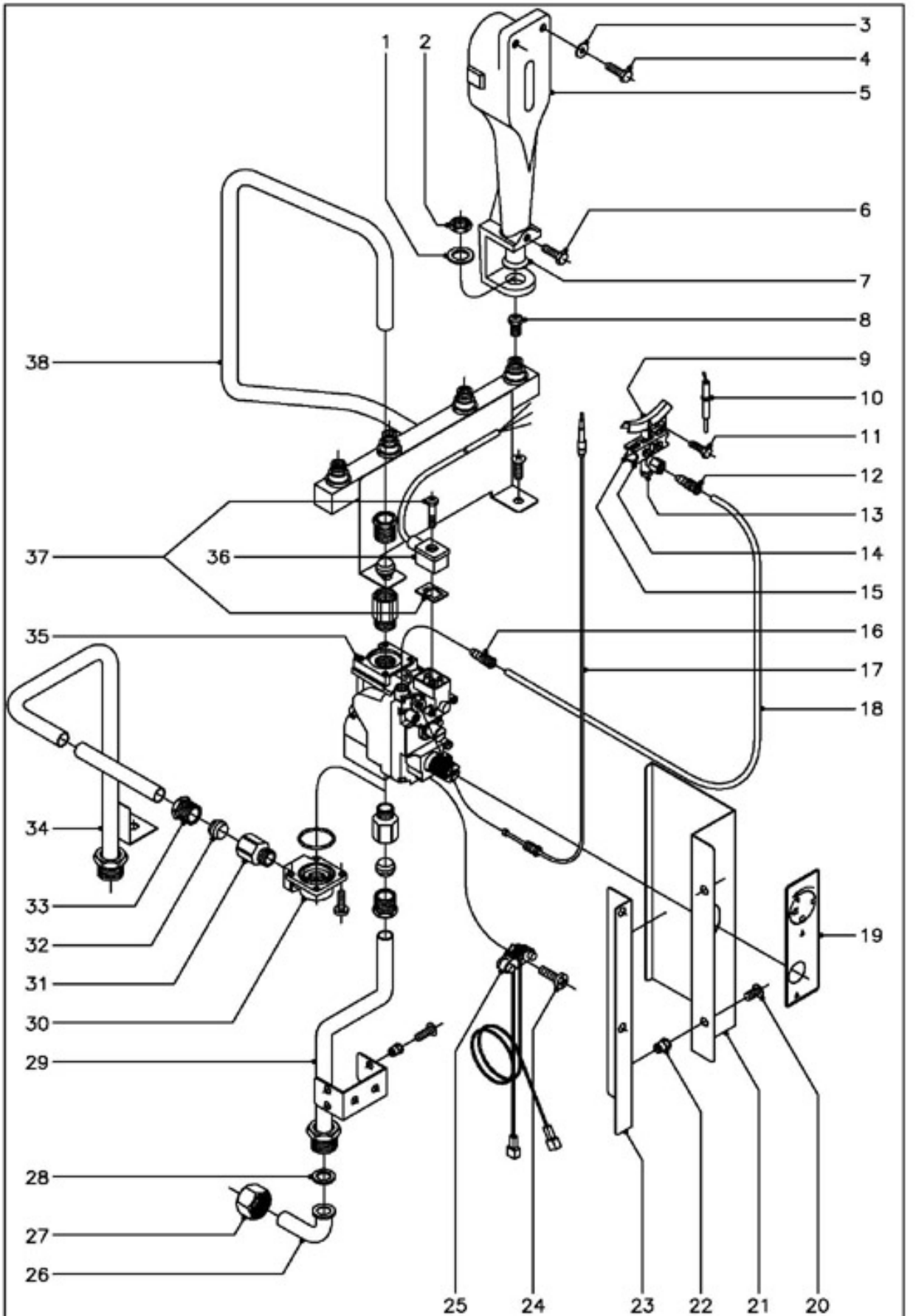

1	Q301322
2	Q223021
3	Q302022
4	Q012043
5	X015700
6	Q012043
7	U325707
8	X162403
8	9429400
8	R642400
9	X012117
s/n	X012122
10	X012101
11	Q012031
12	U134323
13	X012126
s/n	U442138
s/n	U442137
14	X012114
15	X012113
s/n	X012116
16	U134323
17	U562130
18	X165015
19	X162617
20	Q152004
21	X162666
22	Q221342
23	X162668
24	U134321
25	R275027
26	U565007
27	U725006
28	Q306052
29	X165051
30	X153004
31	X162101
32	X012105
33	X012104
34	X195005
35	X163000
36	X163008
37	X163009
38	X165010
38	X195050

N plano	Firma	Fecha	Aparato		Lamina	
C-1004		3-2001	PARTE FUNCIONAL GAS FREIDORAS 900		5	Fagor Industrial S.Coop. Oñate

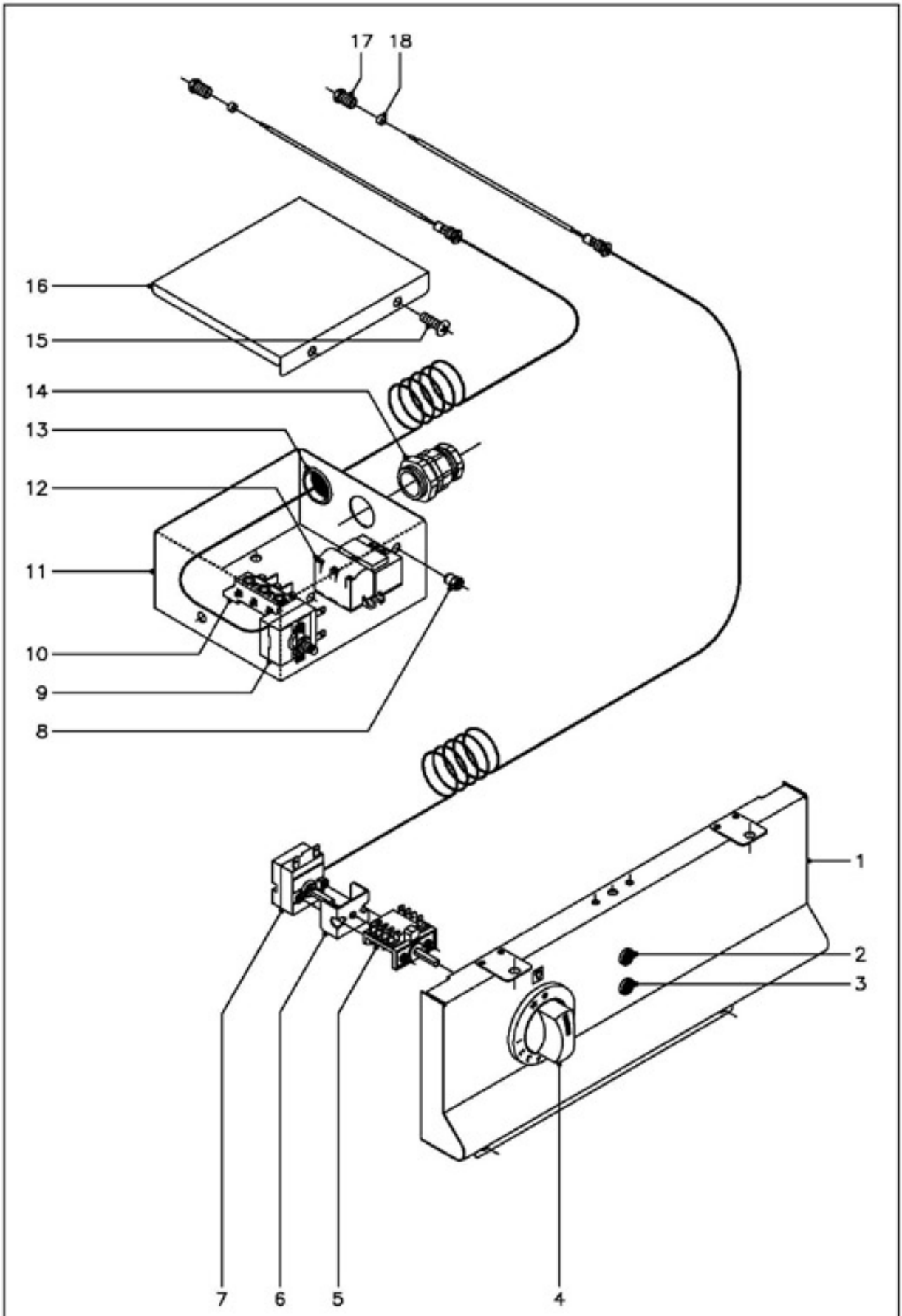

1	X162803
1	X172801
2	Z203004
3	Z203005
4	X313003
s/n	Q281000
5	X163007
6	X313001
7	X163010
8	Q221342
9	X163040
10	U183046
11	X163022
11	X193000
12	R073007
13	X723014
14	R023013
15	Q152004
16	X163023
16	X193001
17	X163015
18	X163016

N plano	Firma	Fecha	Aparato	Lamina	
C-1005		3-2001	PARTE FUNCIONAL ELECTRICA FREIDORAS 900 (GAS)	6	Fagor Industrial S.Coop. FAGOR Onate

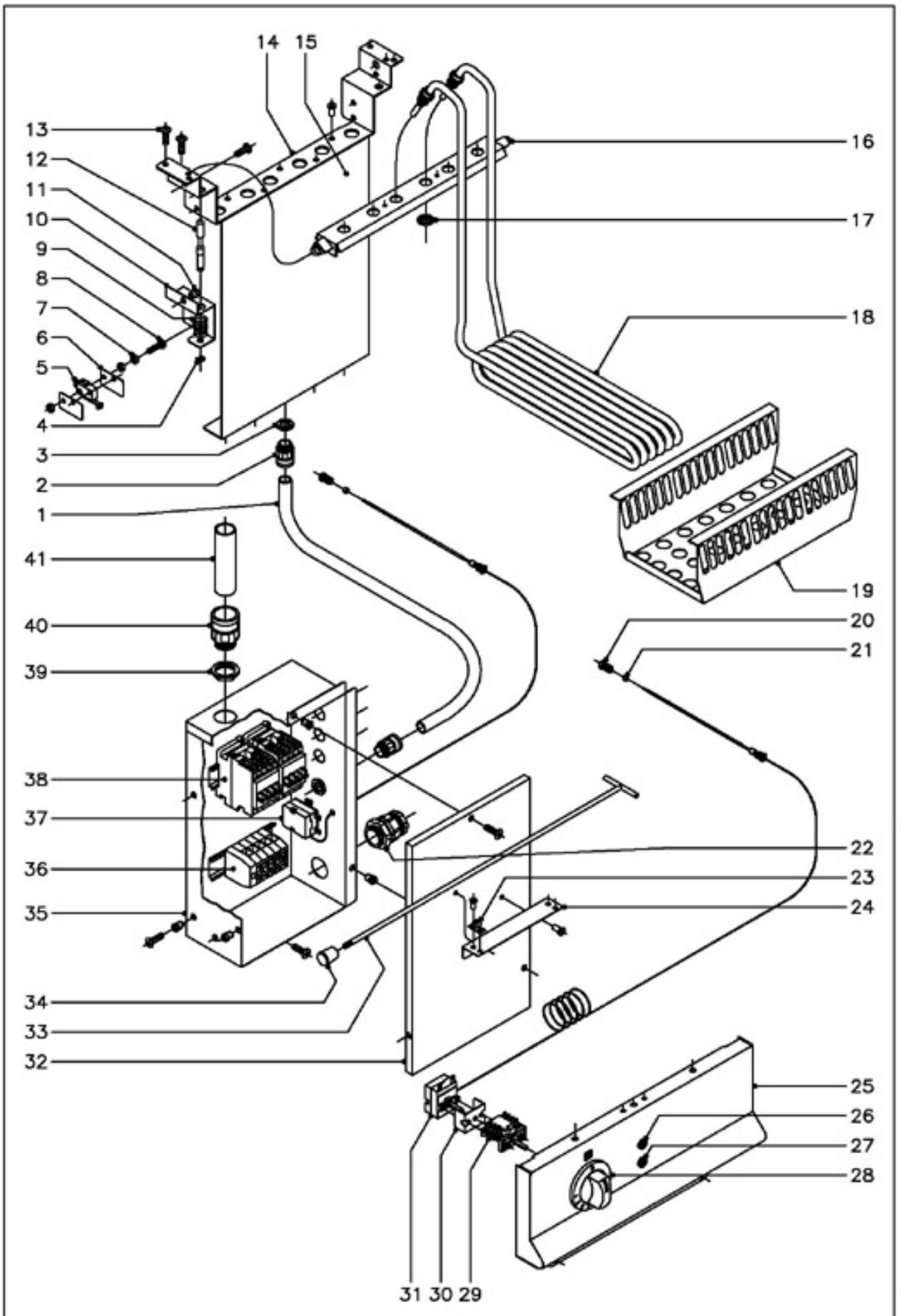

1	3712600
2	X033027
3	X033028
4	Q271033
5	R010534
6	R010535
7	Q161310
8	Q031315
9	Z700603
10	X182616
11	Q221342
12	R010533
13	Q152004
14	X182611
15	X182617
	Q419005
16	X182612
17	-
18	X183021
19	X183023
20	X163015
21	X163016
22	R023013
23	X183055
	Q419006
24	X183054
	Q419005
25	X162803
25	X172801

26	Z203004
27	Z203005
28	X183025
	Q281000
29	X163007
30	X313001
31	X163010
32	X183053
32	X233001
	Q152004
	Q221342
33	X183056
34	X183057
35	X183051
35	X233000
	Q152004
	Q221342
36	Z683069
	Z683097
	Z683070
	Z683096
	Z683068
	R663055
	Q419005
37	X163040
38	X183011
	R663055
	Q419005

		BUTANO - PROPANO
8	X162403	Tobera Ø 1,25
13	U442138	Inyector piloto Ø 0,25 (B.P.y G.V.)
s/n	U136501	Indicador (Butano - Propano)
		GAS NATURAL
8	9429400	Tobera Ø 1,80
13	U442137	Inyector piloto Ø 0,40 (Gas Natural)
s/n	U134402	Indicador (Gas Natural)
		GAS VILLA
8	R642400	Tobera Ø 3,70
13	U442138	Inyector piloto Ø 0,25 (B.P.y G.V.)
s/n	U134310	Indicador (Gas Villa)

N plano	Firma	Fecha	Aparato	Lamina	
C-1006		3-2001	PARTE FUNCIONAL ELECTRICA FREIDORAS 900 (ELECTRICAS)	7	Fagor Industrial S.Coop. FAGOR Oñate