DESPIECE TECNICO

# Lavavasos
# Lave-verres
# Glass-washer
# Glaserspülmaschinen
# Lavabicchieri
# Lavacopos

## Modelos:

**LVC-12**
**LVC-15**
**LVC-21**
**LVC-15 D**
**LVC-21 D**
**LVC-21 B**
**LVC-21 C**
**LVC-21 W**

***Junio 2009 June***
***Revisado Julio 2013 July Revised***

FAGOR

FAGOR INDUSTRIAL

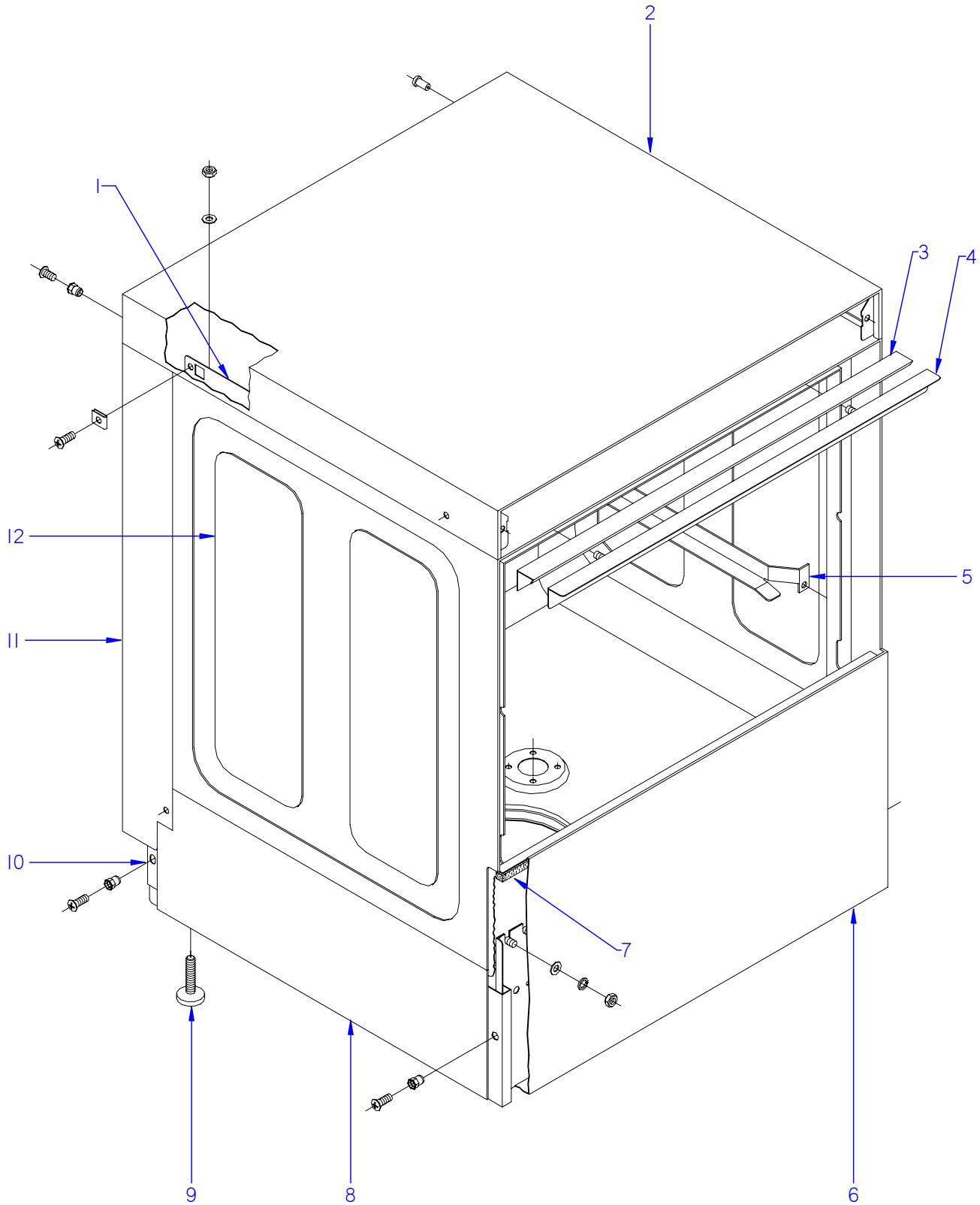


ITEM MARCADO EN COLOR = REPUESTO RECOMENDADO
COLOURED ITEM = RECOMMENDED SPARE PART

| N plano | Firma | Fecha | Aparato | | Lamina | |
|---|---|---|---|---|---|---|
| C-2110 | | 2009-10 | MUEBLE<br>LAVAVASOS LVC | | 1 | Fagor Industrial S.Coop.<br>Onate |

| MOD. | LAVAVASOS | ZONA | MUEBLE | PLANO | C-2110 |
|---|---|---|---|---|---|

| ITEM | CODIGO | DENOMINACION | TEXTO | LVC-12 | LVC-15 | LVC-15D | LVC-21 | LVC-21D | LVC-21B | LVC-21C | LVC-21W | NOTAS |
|---|---|---|---|---|---|---|---|---|---|---|---|---|
| 1 | Z410309000 | ESCUADRA AMARRE TAPA 12-15 | FASTENING BRACKET COVER TA | 2 | 2 | 2 | _ | _ | _ | _ | _ | ELIMINAD. 29.01.10 |
| 1 | Z410317000 | ESCUADRA AMARRE TAPA 12-15 | FASTENING BRACKET COVER TA | 2 | 2 | 2 | _ | _ | _ | _ | _ | INTRODU. 29.01.10 |
| 1 | Z420318000 | ESCUADRA AMARRE TAPA 21 | COVER FASTENING BRACKET 21 | _ | _ | _ | 2 | 2 | 2 | 2 | 2 | ELIMINAD. 29.01.10 |
| 1 | Z420319000 | ESCUADRA AMARRE TAPA 21 | COVER FASTENING BRACKET 21 | _ | _ | _ | 2 | 2 | 2 | 2 | 2 | INTRODU. 29.01.10 |
| | Q232040000 | ARANDELA A6 | WASHER A6 | 4 | 4 | 4 | 4 | 4 | 4 | 4 | 4 | |
| | Q162040000 | TUERCA EXAGONAL M6 | HEXAGONAL NUT M6 | 4 | 4 | 4 | 4 | 4 | 4 | 4 | 4 | |
| | Q221012000 | TUERCA RAPIDA M,5 | RAPID NUT M,5 | 6 | 6 | 6 | 6 | 6 | 6 | 6 | 6 | |
| 2 | Z402904000 | TAPA R10-14-C12-15 | COVER R10-14-C12-15 | 1 | 1 | 1 | _ | _ | _ | _ | _ | |
| 2 | Z422904000 | TAPA R20-C21 | COVER R20-C21 | _ | _ | _ | 1 | 1 | 1 | 1 | 1 | |
| | Q152004000 | TORNILLO APLASTADO M5x13 A304 | FLAT HEADED BOLT M5x13 A304 | 10 | 10 | 10 | 10 | 10 | 10 | 10 | 10 | |
| 3 | Z400315000 | PERFIL CAJA | BOX PROFILE | 1 | 1 | 1 | _ | _ | _ | _ | _ | |
| 3 | Z420315000 | PERFIL CAJA | BOX PROFILE | _ | _ | _ | 1 | 1 | 1 | 1 | 1 | |
| 4 | Z400306000 | ESCUADRA SUJECCION PERFIL | FASTENING BRACKET PROFILE | 1 | 1 | 1 | _ | _ | _ | _ | _ | |
| 4 | Z420306000 | ESCUADRA SUJECCION PERFIL | FASTENING BRACKET PROFILE | _ | _ | _ | 1 | 1 | 1 | 1 | 1 | |
| | Q232040000 | ARANDELA A6 | WASHER A6 | 2 | 2 | 2 | 2 | 2 | 2 | 2 | 2 | |
| | Q162040000 | TUERCA EXAGONAL M6 | HEXAGONAL NUT M6 | 2 | 2 | 2 | 2 | 2 | 2 | 2 | 2 | |
| 5 | Z410304000 | GUIA CESTILLO DERECHA C12-15 | RIGHT BASKET GUIDE C12-15 | 1 | 1 | 1 | _ | _ | _ | _ | _ | |
| 5 | Z440304000 | GUIA CESTILLO DERECHA | RIGHT BASKET GUIDE | _ | _ | _ | 1 | 1 | 1 | 1 | 1 | |
| S/Nº | Z410303000 | GUIA CESTILLO IZQUIERDA C12-15 | LEFT BASKET GUIDE C12-15 | 1 | 1 | 1 | _ | _ | _ | _ | _ | |
| S/Nº | Z440303000 | GUIA CESTILLO IZQUIERDA | LEFT BASKET GUIDE | _ | _ | _ | 1 | 1 | 1 | 1 | 1 | |
| | Q232040000 | ARANDELA A6 | WASHER A6 | 4 | 4 | 4 | 4 | 4 | 4 | 4 | 4 | |
| | Q162040000 | TUERCA EXAGONAL M6 | HEXAGONAL NUT M6 | 4 | 4 | 4 | 4 | 4 | 4 | 4 | 4 | |
| 6 | Z468611000 | PANEL FRONTAL10-12-14-15 NEU | FRONT PANEL10-12-14-15 NEU | 1 | 1 | 1 | _ | _ | _ | _ | _ | |
| 6 | Z448611000 | PANEL FRONTAL C21 | FRONT PANEL C21 | _ | _ | _ | 1 | 1 | _ | _ | _ | |
| 6 | Z458611000 | PANEL FRONTAL 21B | FRONT PANEL 21B | _ | _ | _ | _ | _ | 1 | 1 | 1 | |
| 7 | Z400309000 | PERFIL INFERIOR CAJA | BOX LOWER PROFILE | 1 | 1 | 1 | _ | _ | _ | _ | _ | |
| 7 | Z420309000 | PERFIL INFERIOR CAJA | BOX LOWER PROFILE | _ | _ | _ | 1 | 1 | 1 | 1 | 1 | |
| 8 | Z468720000 | ARMAZON COMPLETO | COMPLETE FRAME | 1 | 1 | 1 | _ | _ | _ | _ | _ | ELIMINAD. 06.10.12 |
| 8 | 12046711 | ARMAZON COMPLETO LVC-12 | COMPLETE FRAME LVC-12 | 1 | 1 | 1 | _ | _ | _ | _ | _ | INTRODUC.06.10.12 |
| 8 | Z420101000 | ARMAZON COMPLETO | COMPLETE FRAME | | _ | _ | 1 | 1 | 1 | 1 | 1 | ELIMINAD. 06.10.12 |
| 8 | 12046707 | ARMAZON COMPLETO LVC-21 | COMPLETE FRAME LVC-21 | _ | _ | _ | 1 | 1 | 1 | 1 | 1 | INTRODUC.06.10.12 |

| MOD. | LAVAVASOS | ZONA | MUEBLE | PLANO | C-2110 |
|---|---|---|---|---|---|

| ITEM | CODIGO | DENOMINACION | TEXTO | LVC-12 | LVC-15 | LVC-15D | LVC-21 | LVC-21D | LVC-21B | LVC-21C | LVC-21W | NOTAS |
|---|---|---|---|---|---|---|---|---|---|---|---|---|
| 9 | Z200107000 | PATA REGULABLE | ADJUSTABLE LEG | 4 | 4 | 4 | 4 | 4 | 4 | 4 | 4 | |
| 10 | Z402908000 | PANEL POSTERIOR INFERIO. 1-4-2-5 | LOWER REAR PANEL. 1-4-2-5 | 1 | 1 | 1 | _ | _ | _ | _ | _ | |
| 10 | Z422908000 | PANEL POSTERIOR INFERIOR 20-21 | LOWER REAR PANEL 20-21 | _ | _ | _ | 1 | 1 | 1 | 1 | 1 | |
| | Q152004000 | TORNILLO APLASTADO M5x13 A304 | FLAT HEADED BOLT M5x13 A304 | 3 | 3 | 3 | 3 | 3 | 3 | 3 | 3 | |
| 11 | Z402902000 | PANEL POSTERIOR A R-10 C-12 | REAR PANEL A R-10 C-12 | 1 | 1 | 1 | _ | _ | _ | _ | _ | |
| 11 | Z422902000 | PANEL POSTERIOR R20-C21 | REAR PANEL R20-C21 | _ | _ | _ | 1 | 1 | 1 | 1 | 1 | |
| 12 | Z468730000 | CAJA SOLDADA LVC-12/15 | WELDED BOX LVC-12/15 | 1 | 1 | _ | _ | _ | _ | _ | _ | |
| 12 | Z480311000 | CAJA SOLDADA LVC-15D | WELDED BOX LVC-15D | _ | _ | 1 | _ | _ | _ | _ | _ | |
| 12 | Z448730000 | CAJA SOLDADA LVC-21 | WELDED BOX LVC-21 | _ | _ | _ | 1 | _ | _ | _ | _ | |
| 12 | Z500311000 | CAJA SOLDADA LVC-21D | WELDED BOX LVC-21D | _ | _ | _ | _ | 1 | _ | _ | _ | |
| 12 | Z440311000 | CAJA SOLDADA LVC-21B | WELDED BOX LVC-21B | _ | _ | _ | _ | _ | 1 | _ | _ | |
| 12 | Z458411000 | CAJA SOLDADA LVC-21W | WELDED BOX LVC-21W | _ | _ | _ | _ | _ | _ | 1 | 1 | |
| | Q162040000 | TUERCA EXAGONAL M6 | HEXAGONAL NUT M6 | 8 | 8 | 8 | 8 | 8 | 8 | 8 | 8 | |
| | Q232040000 | ARANDELA A6 | WASHER A6 | 8 | 8 | 8 | 8 | 8 | 8 | 8 | 8 | |
| | Q262040000 | ARANDELA GROW. A6 A.304 | WASHER GROW. A6 A.304 | 8 | 8 | 8 | 8 | 8 | 8 | 8 | 8 | |

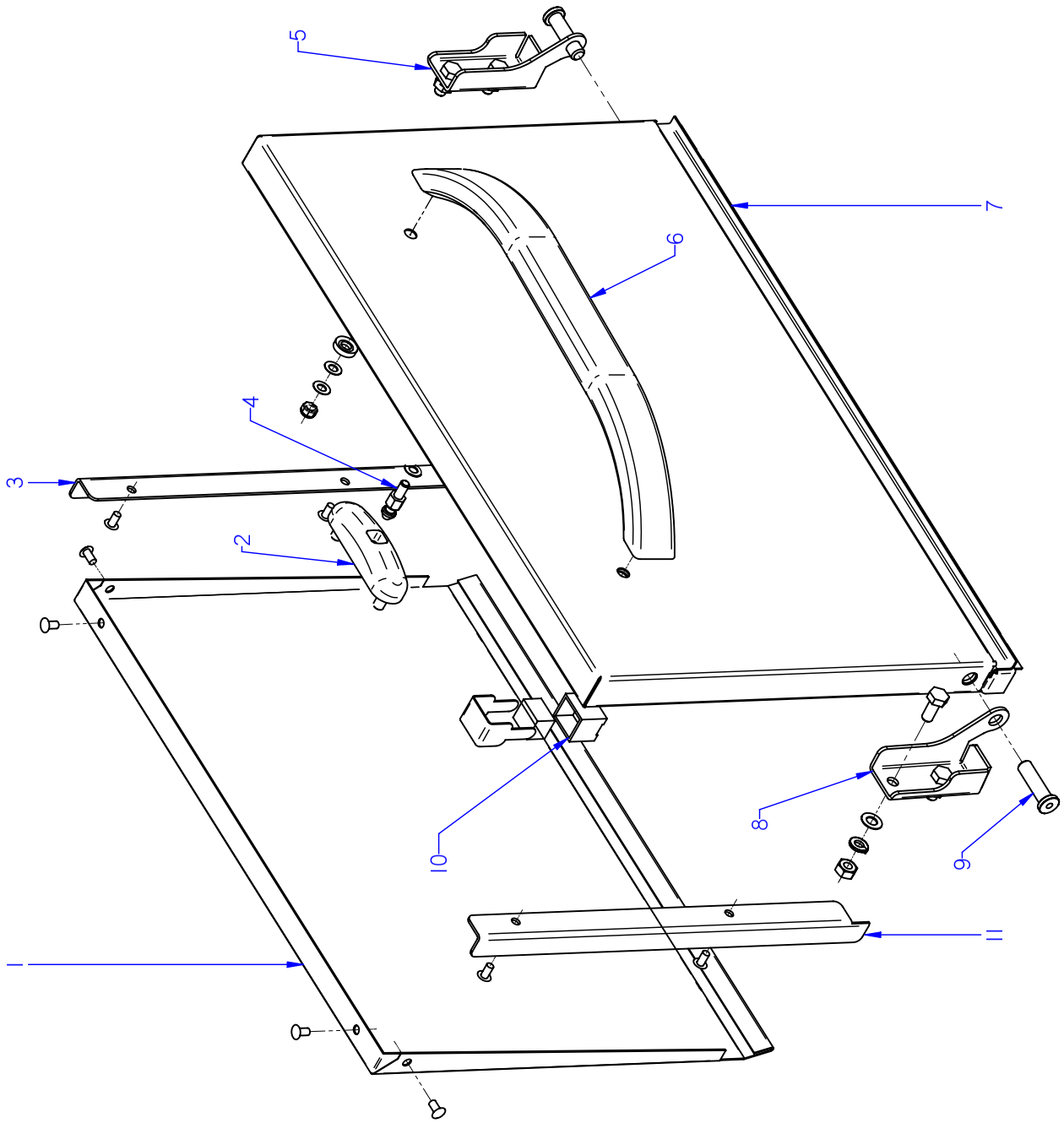


ITEM MARCADO EN COLOR = REPUESTO RECOMENDADO
COLOURED ITEM = RECOMMENDED SPARE PART

| N plano | Firma | Fecha | Aparato | | Lamina | |
|---|---|---|---|---|---|---|
| C-2111 | | 2009-10 | PUERTA | LAVAVASOS LVC | 2 | Fagor Industrial S.Coop. Oñate |

| MOD. | LAVAVASOS | ZONA | PUERTA | PLANO | C-2111 |
|---|---|---|---|---|---|

| ITEM | CODIGO | DENOMINACION | TEXTO | LVC-12 | LVC-15 | LVC-15D | LVC-21 | LVC-21D | LVC-21B | LVC-21C | LVC-21W | NOTAS |
|---|---|---|---|---|---|---|---|---|---|---|---|---|
| | **1200002010** | **KIT PUERTA LAVAVASOS 12-15** | **DOOR KIT 12-15 GLASSWASH.** | **1** | **1** | **1** | _ | _ | _ | _ | _ | |
| | **1200002020** | **KIT PUERTA LAVAVASOS 21** | **DOOR KIT 21 GLASSWASHER** | _ | _ | _ | **1** | **1** | **1** | **1** | **1** | |
| 1 | Z400511000 | CONTRAPUERTA COMPLETA | COMPLETE DOOR REVERSE | 1 | 1 | 1 | _ | _ | _ | _ | _ | |
| 1 | Z420513000 | CONTRAPUERTA COMPL. R20-C21 | COMPL. DOOR REVERSE R20-C2 | | _ | _ | 1 | 1 | 1 | 1 | 1 | |
| | Q412000000 | REMACHE TUBULAR 4 x 8 | TUBULAR RIVET 4 x 8 | 4 | 4 | 4 | 4 | 4 | 4 | 4 | 4 | |
| 2 | Z200607000 | CONJUNTO CIERRE PUERTAT-CO | LOCK UNIT PUERTAT-CO | 1 | 1 | 1 | 1 | 1 | 1 | 1 | 1 | |
| | Q222012000 | TUERCA AUTOBLOCANTE M6 | SELF-LOCKING NUT M6 | 2 | 2 | 2 | 2 | 2 | 2 | 2 | 2 | |
| 3 | Z400521000 | GUIA DERECHA | RIGHT GUIDE | 1 | 1 | 1 | _ | _ | _ | _ | _ | |
| 3 | Z420521000 | GUIA DERECHA | RIGHT GUIDE | _ | _ | _ | 1 | 1 | 1 | 1 | 1 | |
| 4 | Z200601000 | ENGANCHE CIERRE | LOCK LATCH | 1 | 1 | 1 | 1 | 1 | 1 | 1 | 1 | |
| 5 | Z400515000 | BISAGRA DERECHA T-C. | RIGHT HINGE T-C. | 1 | 1 | 1 | 1 | 1 | 1 | 1 | 1 | |
| | Q012042000 | TORNILLO EXAGONAL M6X15 | HEXAGONAL BOLT M6x15 | 2 | 2 | 2 | 2 | 2 | 2 | 2 | 2 | |
| | Q232040000 | ARANDELA A6 | WASHER A6 | 2 | 2 | 2 | 2 | 2 | 2 | 2 | 2 | |
| | Q262040000 | ARANDELAGROW. A6 A.304 | WASHER GROW. A6 A.304 | 2 | 2 | 2 | 2 | 2 | 2 | 2 | 2 | |
| | Q162040000 | TUERCA EXAGONAL M6 | HEXAGONAL NUT M6 | 2 | 2 | 2 | 2 | 2 | 2 | 2 | 2 | |
| 6 | Z400542000 | ASA LVS. | HANDLE LVS. | 1 | 1 | 1 | 1 | 1 | 1 | 1 | 1 | |
| | Q032032000 | TORNILLO ALOMADO M5X15 | CURVED SCREW M5X15 | 2 | 2 | 2 | 2 | 2 | 2 | 2 | 2 | |
| | Q308002000 | ARANDELA DUBO A6 NYLON | WASHER DUBO A6 NYLON | 2 | 2 | 2 | 2 | 2 | 2 | 2 | 2 | |
| 7 | Z468004000 | PUERTA COMPLETA EDESA | COMPLETE DOOR EDESA | 1 | 1 | 1 | _ | _ | _ | _ | _ | |
| 7 | Z448003000 | PUERTA COMPLETA EDESA | COMPLETE DOOR EDESA | | _ | _ | 1 | 1 | 1 | 1 | 1 | |
| S/Nº | Z206135000 | CHECK LIST LAVAVAJILLAS FAGOR | CHECK LIST | 1 | 1 | 1 | 1 | 1 | 1 | 1 | 1 | INTRODU. 19.07.10 |
| 8 | Z400514000 | BISAGRA IZQUIERDA T-C. | LEFT HINGE T-C. | 1 | 1 | 1 | 1 | 1 | 1 | 1 | 1 | |
| | Q012042000 | TORNILLO EXAGONAL M6X15 | HEXAGONAL BOLT M6x15 | 2 | 2 | 2 | 2 | 2 | 2 | 2 | 2 | |
| | Q262040000 | ARANDELAGROW. A6 A.304 | WASHER GROW. A6 A.304 | 2 | 2 | 2 | 2 | 2 | 2 | 2 | 2 | |
| | Q162040000 | TUERCA EXAGONAL M6 | HEXAGONAL NUT M6 | 2 | 2 | 2 | 2 | 2 | 2 | 2 | 2 | |
| 9 | Z400516000 | EJE PUERTA | DOOR SHAFT | 2 | 2 | 2 | 2 | 2 | 2 | 2 | 2 | |
| 10 | Z200506000 | IMAN | MAGNET | _ | 1 | 1 | 1 | 1 | 1 | 1 | 1 | |
| | Z200507000 | PROTECTOR IMAN | MAGNET PROTECTOR | _ | 1 | 1 | 1 | 1 | 1 | 1 | 1 | |
| 11 | Z400522000 | GUIA IZQUIERDA | LEFT GUIDE | 1 | 1 | 1 | _ | _ | _ | _ | _ | |
| 11 | Z420522000 | GUIA IZQUIERDA | LEFT GUIDE | _ | _ | _ | 1 | 1 | 1 | 1 | 1 | |
| | Q412000000 | REMACHE TUBULAR 4 x 8 | TUBULAR RIVET 4 x 8 | 2 | 2 | 2 | 2 | 2 | 2 | 2 | 2 | |

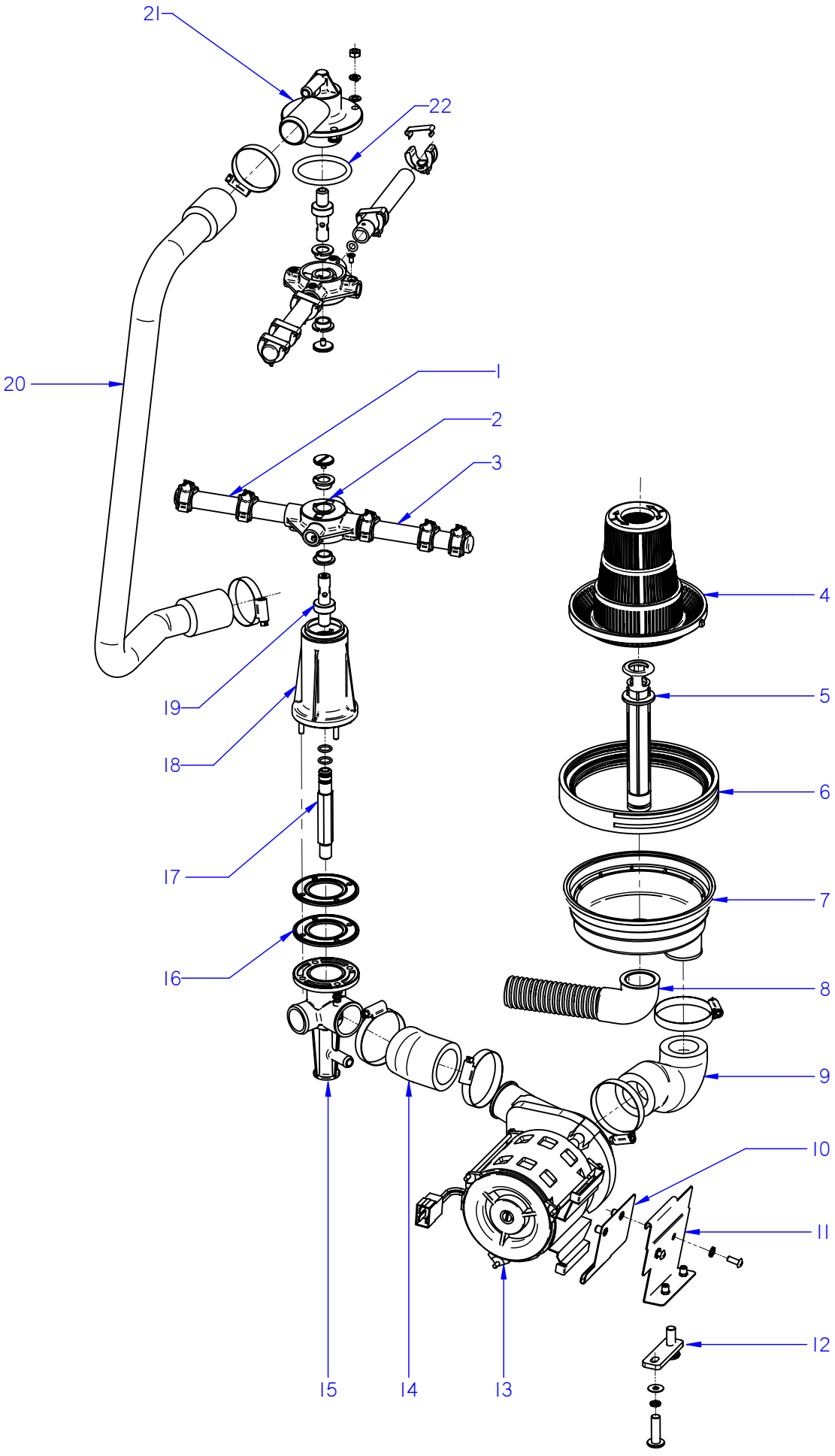


ITEM MARCADO EN COLOR = REPUESTO RECOMENDADO
COLOURED ITEM = RECOMMENDED SPARE PART

| N plano | Firma | Fecha | Aparato | Lamina | |
|---|---|---|---|---|---|
| C-2112 | | 2009-10 | CONJUNTO FUNCIONAL LAVADO<br>LAVAVASOS LVC | 3 | Fagor Industrial S.Coop.<br>Onate |

| MOD. | LAVAVASOS | ZONA | CONJUNTO FUNCIONAL LAVADO | PLANO | C-2112 |
|---|---|---|---|---|---|

| ITEM | CODIGO | DENOMINACION | TEXTO | LVC-12 | LVC-15 | LVC-15D | LVC-21 | LVC-21D | | | NOTAS |
|---|---|---|---|---|---|---|---|---|---|---|---|
| 1 | Z460701000 | RAMA LAVADO B | WASH B BRANCH | 2 | 2 | 2 | _ | _ | | | |
| 1 | Z440707000 | RAMA LAVADO B | WASH B BRANCH | | _ | _ | 2 | 2 | | | |
| | Z400709000 | TOBERA LAVADO | WASH NOZZLE | 4 | 4 | 4 | 6 | 6 | | | |
| | Z400711000 | ENGANCHE TOBERA LAVADO | WASH NOZZLE CATCH | 4 | 4 | 4 | 6 | 6 | | | |
| 2 | Z410704000 | CRUCETA | CROSSPIECE | 2 | 2 | 2 | 2 | 2 | | | |
| | Q152016000 | TORNILLO ESPECIAL M.5X0.8 | SPECIAL BOLT M.5X0.8 | 2 | 2 | 2 | 2 | 2 | | | |
| | Z410705000 | CASQUILLO CRUCETA | CROSSPIECE BUSHING | 4 | 4 | 4 | 4 | 4 | | | |
| 3 | Z460702000 | RAMA LAVADO A | WASH BRANCH A | 2 | 2 | 2 | _ | _ | | | |
| 3 | Z440706000 | RAMA LAVADO A | WASH BRANCH A | _ | _ | _ | 2 | 2 | | | |
| | Z400709000 | TOBERA LAVADO | WASH NOZZLE | 6 | 6 | 6 | 6 | 6 | | | |
| | Z400711000 | ENGANCHE TOBERA LAVADO | WASH NOZZLE CATCH | 6 | 6 | 6 | 6 | 6 | | | |
| 4 | Z400920000 | FILTRO ALTO | HIGH FILTER | 1 | 1 | 1 | 1 | 1 | | | |
| 5 | Z400907000 | ALIVIADERO | OVERFLOW | 1 | 1 | 1 | 1 | 1 | | | |
| S/Nº | 12010282 | JUNTA TORICA 25.4X20.2X2.6 | O-RING 25.4X20.2X2.6 | 1 | 1 | 1 | 1 | 1 | | | |
| 6 | Z400902000 | JUNTA CUBETA | TRAY SEAL | 1 | 1 | 1 | 1 | 1 | | | |
| 7 | Z400901000 | CUBETA | TRAY | 1 | 1 | 1 | 1 | 1 | | | |
| | Z400903000 | ABRAZADERA CUBETA | TRAY CLAMP | 1 | 1 | 1 | 1 | 1 | | | |
| 8 | Z400908000 | MANGUERA DESAGÜE | DRAINAGE HOSE | 1 | 1 | 1 | 1 | 1 | | | |
| | Q901307000 | ABRAZADERA ELASTICA 37.7-39.7 | ELASTIC CLAMP 37.7-39.7 | 1 | 1 | 1 | 1 | 1 | | | |
| 9 | Z400905000 | CODO ASPIRACION 1003115 | EXTRACTOR ELBOW 1003115 | 1 | 1 | 1 | 1 | 1 | | | |
| | Q881307000 | ABRAZADERA 40-60 | CLAMP 40-60 | 2 | 2 | 2 | 2 | 2 | | | |
| 10 | Z401004000 | AMARRE MOTOBOMBA | MOTORPUMP FASTENING | 1 | 1 | 1 | 1 | 1 | | | |
| 11 | Z401002000 | SOPORTE MOTOBOMBA | MOTOR PUMP SUPPORT | 1 | 1 | 1 | _ | _ | | | |
| 11 | Z421002000 | SOPORTE MOTOBOMBA | MOTOR PUMP SUPPORT | _ | _ | _ | 1 | 1 | | | |
| | Q152004000 | TORNILLO APLASTADO M5x13 A304 | FLAT HEADED BOLT M5x13 A304 | 2 | 2 | 2 | 2 | 2 | | | |
| | Q242030000 | ARANDELA ABANICO A5 A.304 | FAN WASHER A5 A.304 | 2 | 2 | 2 | 2 | 2 | | | |
| 12 | Z401006000 | PERFIL AMORTIGUADOR | SHOCK ABSORBER PROFILE | 1 | 1 | 1 | 1 | 1 | | | |
| | Q302022000 | ARANDELA 16x6x1,2 A304 | WASHER 16x6x1.2 A304 | 2 | 2 | 2 | 2 | 2 | | | |
| | Q032032000 | TORNILLO ALOMADO M5X15 | CURVED SCREW M5X15 | 2 | 2 | 2 | 2 | 2 | | | |
| 13 | Z401001000 | BOMBA LAVADO | WASH PUMP | 1 | 1 | 1 | 1 | 1 | | | |
| | Z401001100 | TURBINA BOMBA Z401001 | TURBINE PUMP Z401001 | 1 | 1 | 1 | 1 | 1 | | | |

| MOD. | LAVAVASOS | ZONA | CONJUNTO FUNCIONAL LAVADO | PLANO | C-2112 |
|---|---|---|---|---|---|

| ITEM | CODIGO | DENOMINACION | TEXTO | LVC-12 | LVC-15 | LVC-15D | LVC-21 | LVC-21D | | | NOTAS |
|---|---|---|---|---|---|---|---|---|---|---|---|
| 14 | Z400906000 | CODO IMPULSION 1003116 | IMPULSE ELBOW 1003116 | 1 | 1 | 1 | 1 | 1 | | | |
| | Q881307000 | ABRAZADERA 40-60 | CLAMP 40-60 | 2 | 2 | 2 | 2 | 2 | | | |
| 15 | Z410702000 | PASAMUROS CESTO CUADRADO | SQUARE BASKET WALL BUSHIN | 1 | 1 | 1 | 1 | 1 | | | |
| | Q232030000 | ARANDELA A5 | WASHER A5 | 4 | 4 | 4 | 4 | 4 | | | |
| | Q262030000 | ARANDELA GROW. A5 A.304 | WASHER GROW. A5 A.304 | 4 | 4 | 4 | 4 | 4 | | | |
| | Q162030000 | TUERCA EXAGONAL M5 | HEXAGONAL NUT M5 | 4 | 4 | 4 | 4 | 4 | | | |
| 16 | Z400703000 | JUNTA ESTANQUE. 1003113 | SEAL. 1003113 | 2 | 2 | 2 | 2 | 2 | | | |
| 17 | Z410712000 | EMPALME ACLARADO | RINSE CONNECTION | 1 | 1 | 1 | 1 | 1 | | | |
| | Q307056000 | JUNTA TORICA 10,82x14,38x1,78 | O-RING 10.82x14.38x1.78 | 2 | 2 | 2 | 2 | 2 | | | |
| 18 | Z410701000 | SOPORTE INFERIOR CUADRO | LOWER SUPPORT BRACKET | 1 | 1 | 1 | 1 | 1 | | | |
| 19 | Z410708000 | EJE | SHAFT | 2 | 2 | 2 | 2 | 2 | | | |
| 20 | Z410711000 | ARBOL LAVADO | WASH CAM | 1 | 1 | 1 | _ | _ | | | |
| 20 | Z440711000 | ARBOL LAVADO | WASH CAM | _ | _ | _ | 1 | 1 | | | |
| | Q881306000 | ABRAZADERA 32-50L | CLAMP 32-50L | 2 | 2 | 2 | 2 | 2 | | | |
| 21 | Z410703000 | SOPORTE DISTRIB. SUPERIOR | UPPER DISTRIB. SUPPORT | 1 | 1 | 1 | 1 | 1 | | | |
| | Q232040000 | ARANDELA A6 | WASHER A6 | 4 | 4 | 4 | 4 | 4 | | | |
| | Q262040000 | ARANDELA GROW. A6 A.304 | WASHER GROW. A6 A.304 | 4 | 4 | 4 | 4 | 4 | | | |
| | Q162040000 | TUERCA EXAGONAL M6 | HEXAGONAL NUT M6 | 4 | 4 | 4 | 4 | 4 | | | |
| 22 | Q307052000 | JUNTA TORICA 50,17X60,83X5,3 | O-RING 50.17X60.83X5.3 | 1 | 1 | 1 | 1 | 1 | | | |

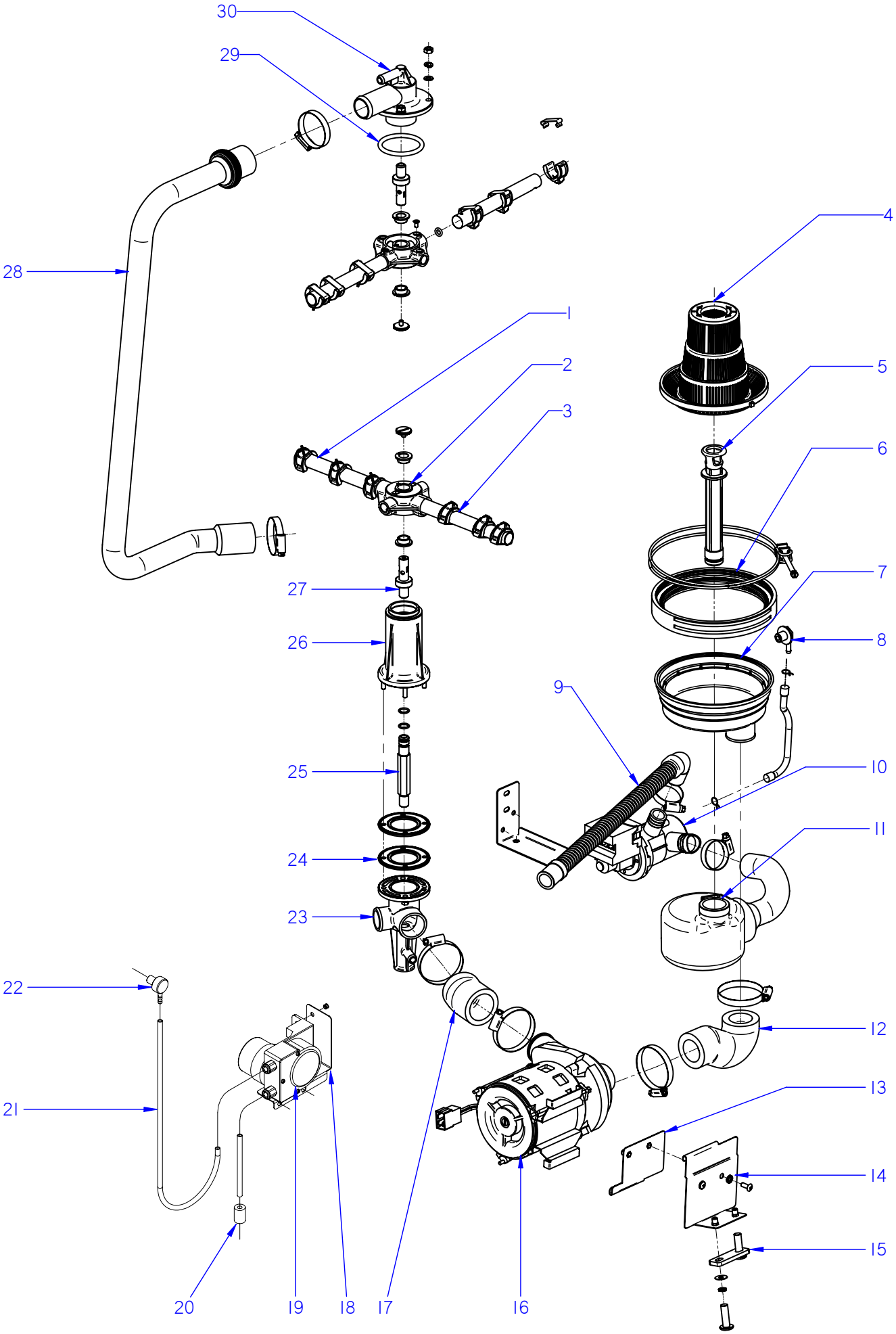


ITEM MARCADO EN COLOR = REPUESTO RECOMENDADO
COLOURED ITEM = RECOMMENDED SPARE PART

| N plano | Firma | Fecha | Aparato | CONJUNTO FUNCIONAL LAVADO | Lamina | |
|---|---|---|---|---|---|---|
| C-2113 | | 2009-10 | LAVAVASOS LVC-21B / 21C / 21W | | 4 | Fagor Industrial S.Coop. FAGOR Onate |

| MOD. | LAVAVASOS | ZONA | CONJUNTO FUNCIONAL LAVADO | PLANO | C-2113 |
|---|---|---|---|---|---|

| ITEM | CODIGO | DENOMINACION | TEXTO | LVC-21B | LVC-21C | LVC-21W | | | | | NOTAS |
|---|---|---|---|---|---|---|---|---|---|---|---|
| 1 | Z440707000 | RAMA LAVADO B | WASH B BRANCH | 2 | 2 | 2 | | | | | |
| | Z400709000 | TOBERA LAVADO | WASH NOZZLE | 6 | 6 | 6 | | | | | |
| | Z400711000 | ENGANCHE TOBERA LAVADO | WASH NOZZLE CATCH | 6 | 6 | 6 | | | | | |
| 2 | Z410704000 | CRUCETA | CROSSPIECE | 2 | 2 | 2 | | | | | |
| | Q152016000 | TORNILLO ESPECIAL M.5X0.8 | SPECIAL BOLT M.5X0.8 | 2 | 2 | 2 | | | | | |
| | Z410705000 | CASQUILLO CRUCETA | CROSSPIECE BUSHING | 4 | 4 | 4 | | | | | |
| 3 | Z440706000 | RAMA LAVADO A | WASH BRANCH A | 2 | 2 | 2 | | | | | |
| | Z400709000 | TOBERA LAVADO | WASH NOZZLE | 6 | 6 | 6 | | | | | |
| | Z400711000 | ENGANCHE TOBERA LAVADO | WASH NOZZLE CATCH | 6 | 6 | 6 | | | | | |
| 4 | Z400920000 | FILTRO ALTO | HIGH FILTER | 1 | 1 | 1 | | | | | |
| 5 | Z400907000 | ALIVIADERO | OVERFLOW | 1 | 1 | 1 | | | | | ELIMINADO 24.06.2013 |
| 5 | 12047160 | ALIVIADERO LVS MOD. B | OVERFLOW LVS MOD. B | 1 | 1 | 1 | | | | | INTRODUCIDO 24.06.2013 |
| S/Nº | 12010282 | JUNTA TORICA 25.4X20.2X2.6 | O-RING 25.4X20.2X2.6 | 1 | 1 | 1 | | | | | |
| 6 | Z400902000 | JUNTA CUBETA | TRAY SEAL | 1 | 1 | 1 | | | | | |
| 7 | Z400901000 | CUBETA | TRAY | 1 | 1 | 1 | | | | | |
| | Z400903000 | ABRAZADERA CUBETA | TRAY CLAMP | 1 | 1 | 1 | | | | | |
| 8 | Z230905000 | PASAMUROS INOX DETERGENTE | INOX DETERGENT WALL BUSHIN | 1 | 2 | 1 | | | | | |
| | P102154000 | BRIDA ELASTICA TUBO | ELASTIC PIPE FLANGE | 2 | 2 | 2 | | | | | |
| | 3702400000 | TUBO GOMA NEGRO D 8*4 | BLACK RUBBER PIPE Ø 8*4 | 1 | 1 | 1 | | | | | |
| 9 | Z220903000 | MANGUERA DESAGÜE | DRAINAGE HOSE | 1 | 1 | 1 | | | | | |
| | Q901307000 | ABRAZADERA ELASTICA 37.7-39.7 | ELASTIC CLAMP 37.7-39.7 | 1 | 1 | 1 | | | | | |
| 10 | Z220901000 | BOMBA DESAGUE 30W | DRAINAGE PUMP 30W | 1 | 1 | _ | | | | | |
| 10 | Z223501000 | BOMBA DE DESAGUE 30W 60HZ | DRAINAGE PUMP 30W 60HZ | 1 | 1 | 1 | | | | | |
| | Z430902000 | SOPORTE BOMBA DESAGUE B | DRAINAGE PUMP SUPPORT B | 1 | 1 | 1 | | | | | |
| | Q012031000 | TORNILLO EXAGONAL M5X10 | HEXAGONAL BOLT M5x10 | 4 | 4 | 4 | | | | | |
| | Q242030000 | ARANDELA ABANICO A5 A.304 | FAN WASHER A5 A.304 | 4 | 4 | 4 | | | | | |
| 11 | Z430901000 | ACUMULADOR 1503114 | ACCUMULATOR 1503114 | 1 | 1 | 1 | | | | | |
| | Q901307000 | ABRAZADERA ELASTICA 37.7-39.7 | ELASTIC CLAMP 37.7-39.7 | 2 | 2 | 2 | | | | | |
| 12 | Z400905000 | CODO ASPIRACION 1003115 | EXTRACTOR ELBOW 1003115 | 1 | 1 | 1 | | | | | |
| | Q881307000 | ABRAZADERA 40-60 | CLAMP 40-60 | 2 | 2 | 2 | | | | | |
| 13 | Z401004000 | AMARRE MOTOBOMBA | MOTORPUMP FASTENING | 1 | 1 | 1 | | | | | |

| MOD. | LAVAVASOS | ZONA | CONJUNTO FUNCIONAL LAVADO | PLANO | C-2113 |
|---|---|---|---|---|---|

| ITEM | CODIGO | DENOMINACION | TEXTO | LVC-21B | LVC-21C | LVC-21W | | | | | NOTAS |
|---|---|---|---|---|---|---|---|---|---|---|---|
| 14 | Z421002000 | SOPORTE MOTOBOMBA | MOTOR PUMP SUPPORT | 1 | 1 | 1 | | | | | |
| | Q152004000 | TORNILLO APLASTADO M5x13 A304 | FLAT HEADED BOLT M5x13 A304 | 2 | 2 | 2 | | | | | |
| | Q242030000 | ARANDELA ABANICO A5 A.304 | FAN WASHER A5 A.304 | 2 | 2 | 2 | | | | | |
| 15 | Z401006000 | PERFIL AMORTIGUADOR | SHOCK ABSORBER PROFILE | 1 | 1 | 1 | | | | | |
| | Q242030000 | ARANDELA ABANICO A5 A.304 | FAN WASHER A5 A.304 | 2 | 2 | 2 | | | | | |
| | Q302022000 | ARANDELA 16x6x1,2 A304 | WASHER 16x6x1.2 A304 | 2 | 2 | 2 | | | | | |
| | Q032032000 | TORNILLO ALOMADO M5X15 | CURVED SCREW M5X15 | 2 | 2 | 2 | | | | | |
| 16 | Z401001000 | BOMBA LAVADO | WASH PUMP | 1 | 1 | 1 | | | | | |
| | Z401001100 | TURBINA BOMBA Z401001 | TURBINE PUMP Z401001 | 1 | 1 | 1 | | | | | |
| 17 | Z400906000 | CODO IMPULSION 1003116 | IMPULSE ELBOW 1003116 | 1 | 1 | 1 | | | | | |
| | Q881307000 | ABRAZADERA 40-60 | CLAMP 40-60 | 2 | 2 | 2 | | | | | |
| 18 | Z208909000 | SOPORTE DOSIF. DETERGENTE | DETERGENT DISP. SUPPORT | _ | 1 | 1 | | | | | |
| | Q419005000 | REMACHE 4X8 ALMG3 / ALUMINIO | RIVET 4X8 ALMG3 / ALUMINIUM | _ | 2 | 2 | | | | | |
| 19 | Z208903000 | DOSIFIC. DGTE REGULABLE G300 | DETERGENT DISP. ADJUST. G30 | _ | 1 | 1 | | | | | |
| | Q012031000 | TORNIL.EXAGONAL M5X10 A.304 | HEX BOLT M5X10 A.304 | _ | 2 | 2 | | | | | |
| | Q232030000 | ARANDELA A5 | WASHER A5 | _ | 2 | 2 | | | | | |
| 20 | Z701152000 | PESO FILTRO | FILTER WEIGHT | _ | 1 | 1 | | | | | |
| 21 | Z448614000 | CONDUCTO ASPIRACIÓN | EXTRACTOR PIPE | _ | 1 | 1 | | | | | |
| 22 | Z208914000 | PASAMUROS INOX DETERGENTE | INOX DETERGENT WALL BUSHIN | _ | 1 | 1 | | | | | |
| | Q306024000 | JUNTA Ø18X12.5X1.5 | SEAL Ø18X12.5X1.5 | _ | 1 | 1 | | | | | |
| | Q162070000 | TUERCA EXAGONAL M12 | HEXAGONAL NUT M12 | _ | 1 | 1 | | | | | |
| S/Nº | Z208904000 | CABLEADO DOSIFICADOR DTGTE. | DETERGENT DISP. WIRING | _ | 1 | 1 | | | | | |
| 23 | Z410702000 | PASAMUROS CESTO CUADRADO | SQUARE BASKET WALL BUSHIN | 1 | 1 | 1 | | | | | |
| | Q232030000 | ARANDELA A5 | WASHER A5 | 4 | 4 | 4 | | | | | |
| | Q262030000 | ARANDELA GROW. A5 A.304 | WASHER GROW. A5 A.304 | 4 | 4 | 4 | | | | | |
| | Q162030000 | TUERCA EXAGONAL M5 | HEXAGONAL NUT M5 | 4 | 4 | 4 | | | | | |
| 24 | Z400703000 | JUNTA ESTANQUE. 1003113 | SEAL. 1003113 | 2 | 2 | 2 | | | | | |
| 25 | Z410712000 | EMPALME ACLARADO | RINSE CONNECTION | 1 | 1 | 1 | | | | | |
| | Q307056000 | JUNTA TORICA 10,82x14,38x1,78 | O-RING 10.82x14.38x1.78 | 2 | 2 | 2 | | | | | |
| 26 | Z410701000 | SOPORTE INFERIOR CUADRO | LOWER SUPPORT BRACKET | 1 | 1 | 1 | | | | | |
| 27 | Z410708000 | EJE | SHAFT | 2 | 2 | 2 | | | | | |

| MOD. | LAVAVASOS | ZONA | CONJUNTO FUNCIONAL LAVADO | PLANO | C-2113 |
|---|---|---|---|---|---|

| ITEM | CODIGO | DENOMINACION | TEXTO | LVC-21B | LVC-21C | LVC-21W | | | | | NOTAS |
|---|---|---|---|---|---|---|---|---|---|---|---|
| 28 | Z440711000 | ARBOL LAVADO | WASH CAM | 1 | 1 | 1 | | | | | |
| | Q881306000 | ABRAZADERA 32-50L | CLAMP 32-50L | 2 | 2 | 2 | | | | | |
| 29 | Q307052000 | JUNTA TORICA 50,17X60,83X5,3 | O-RING 50.17X60.83X5.3 | 1 | 1 | 1 | | | | | |
| 30 | Z410703000 | SOPORTE DISTRIB. SUPERIOR | UPPER DISTRIB. SUPPORT | 1 | 1 | 1 | | | | | |
| | Q232040000 | ARANDELA A6 | WASHER A6 | 4 | 4 | 4 | | | | | |
| | Q262040000 | ARANDELA GROW. A6 A.304 | WASHER GROW. A6 A.304 | 4 | 4 | 4 | | | | | |
| | Q162040000 | TUERCA EXAGONAL M6 | HEXAGONAL NUT M6 | 4 | 4 | 4 | | | | | |

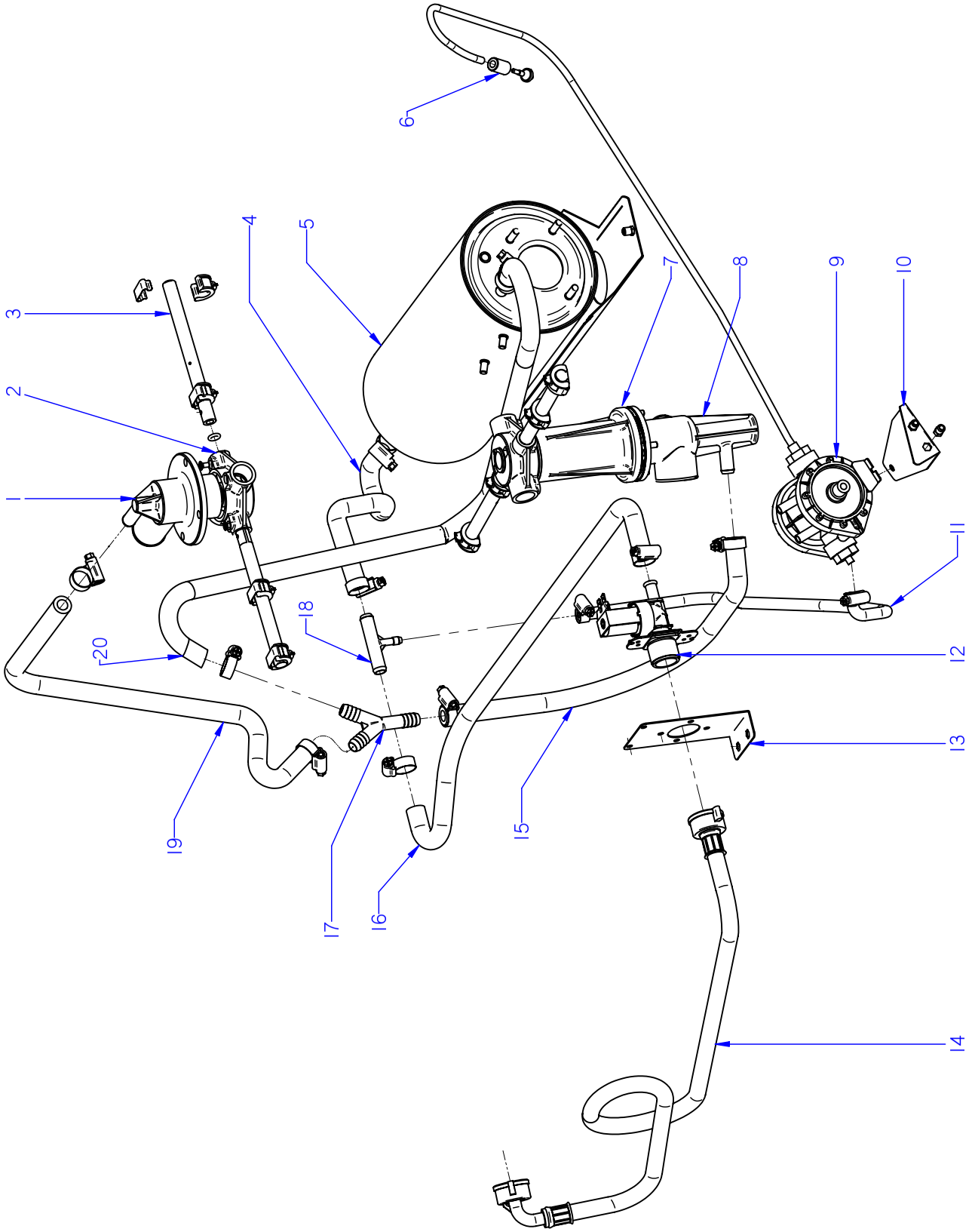


ITEM MARCADO EN COLOR = REPUESTO RECOMENDADO
COLOURED ITEM = RECOMMENDED SPARE PART

| N plano | Firma | Fecha | Aparato | Lamina | |
|---|---|---|---|---|---|
| C-2114 | | 2009-10 | CONJUNTO FUNCIONAL ACLARADO<br>LAVAVASOS LVC-12 | 5 | Fagor Industrial S.Coop.<br>Oñate |

| MOD. | LAVAVASOS | ZONA | CONJUNTO FUNCIONAL ACLARADO | PLANO | C-2114 |
|---|---|---|---|---|---|

| ITEM | CODIGO | DENOMINACION | TEXTO | LVC-12 | | | | | | | NOTAS |
|---|---|---|---|---|---|---|---|---|---|---|---|
| 1 | Z410703000 | SOPORTE DISTRIBUIDOR SUPER. | UPPER DISTRIBUTION SUPPORT | 1 | | | | | | | |
| | Q232040000 | ARANDELA A6 | WASHER A6 | 4 | | | | | | | |
| | Q262040000 | ARANDELA GROW. A6 A.304 | WASHER GROW. A6 A.304 | 4 | | | | | | | |
| | Q162040000 | TUERCA EXAGONAL M6 | HEXAGONAL NUT M6 | 4 | | | | | | | |
| 2 | Z410704000 | CRUCETA | CROSSPIECE | 2 | | | | | | | |
| | Q152016000 | TORNILLO ESPECIAL M.5X0.8 | SPECIAL BOLT M.5X0.8 | 2 | | | | | | | |
| | Z410705000 | CASQUILLO CRUCETA | CROSSPIECE BUSHING | 4 | | | | | | | |
| 3 | Z461901000 | RAMA ACLARADO B | RINSE BRANCH B | 2 | | | | | | | |
| S/Nº | Z461902000 | RAMA ACLARADO A | RINSE BRANCH A | 2 | | | | | | | |
| | Z201905000 | TOBERA ACLARADO | RINSE NOZZLE | 8 | | | | | | | |
| | Z201906000 | ENGANCHE TOB. ACLA.19728 | NOZZLE LATCH RINSE.19728 | 8 | | | | | | | |
| | Q307036000 | JUNTA TORICA 5,28X8,84X1,78 | O-RING 5.28X8.84X1.78 | 8 | | | | | | | |
| | Q042021000 | TORNILL. AVELLANADO M4X10 A304 | COUNTERSUNK BOLT M4X10 A3 | 4 | | | | | | | |
| 4 | 3676900000 | TUBO GOMA NEGRA Ø17*10 | BLACK RUBBER PIPE Ø17*10 | 1 | | | | | | | |
| | Q881302000 | ABRAZADERA 12/20 | CLAMP 12/20 | 2 | | | | | | | |
| 5 | 12022893 | CALDERIN LAVAVASOS 10-2 | GLASSWASHER BOILER 10-2 | 1 | | | | | | | |
| 6 | Z701152000 | PESO FILTRO | FILTER WEIGHT | 1 | | | | | | | |
| 7 | Z410701000 | SOPORTE INFERIOR CUADRO | LOWER SUPPORT BRACKET | 1 | | | | | | | |
| 8 | Z410702000 | PASAMUROS CESTO CUADRADO | SQUARE BASKET WALL BUSHIN | 1 | | | | | | | |
| | Q232030000 | ARANDELA A5 | WASHER A5 | 4 | | | | | | | |
| | Q262030000 | ARANDELA GROW. A5 A.304 | WASHER GROW. A5 A.304 | 4 | | | | | | | |
| | Q162030000 | TUERCA EXAGONAL M5 | HEXAGONAL NUT M5 | 4 | | | | | | | |
| 9 | Z211109000 | DOSIFICADOR TENSOACTIVO N-6 | SURFACE ACT. DISP. N-6 | 1 | | | | | | | ELIMINADO 18.06.2012 |
| 9 | 12045206 | DOSIFICADOR_ABRILLANTADOR_A | RINSE AID DISPENSER | 1 | | | | | | | INTRODUCIDO 18.06.2012 |
| S/Nº | Z448618000 | CONDUCTO ABRILLANTADOR | POLISH DUCT | 1 | | | | | | | |
| 10 | Z401116000 | SOPORTE DOSIFICADOR | DISPENSER SUPPORT | 1 | | | | | | | |
| | Q242030000 | ARANDELA ABANICO A5 A.304 | FAN WASHER A5 A.304 | 4 | | | | | | | |
| | Q152004000 | TORNILLO APLASTADO M5x13 A304 | FLAT HEADED BOLT M5x13 A304 | 2 | | | | | | | |
| 11 | 3704000000 | TUBO GOMA NEGRA Ø10,5*5 | BLACK RUBBER PIPE Ø10,5*5 | 1 | | | | | | | |
| | Q881308000 | ABRAZADERA 8/14 | CLAMP 8/14 | 2 | | | | | | | |
| 12 | Z701135000 | ELECTROVALV. SIMP. 220V 255.208 | SIMP. SOLENOID VALVE 220V 25 | 1 | | | | | | | |

| MOD. | LAVAVASOS | ZONA | CONJUNTO FUNCIONAL ACLARADO | PLANO | C-2114 |
|---|---|---|---|---|---|

| ITEM | CODIGO | DENOMINACION | TEXTO | LVC-12 | | | | | | | NOTAS |
|---|---|---|---|---|---|---|---|---|---|---|---|
| 13 | Z401111000 | SOPORTE ELECTROVALVULA | SOLENOID VLVE SUPPORT | 1 | | | | | | | |
| | Q242030000 | ARANDELA ABANICO A5 A.304 | FAN WASHER A5 A.304 | 6 | | | | | | | |
| | Q152004000 | TORNILLO APLASTADO M5x13 A304 | FLAT HEADED BOLT M5x13 A304 | 4 | | | | | | | |
| | Q152024000 | TORNILLO AVELLANADO M4X8 A304 | COUNTERSUNK BOLT M4X8 A30 | 2 | | | | | | | |
| | Q012031000 | TORNILLO EXAGONAL M5X10 | HEXAGONAL BOLT M5x10 | 2 | | | | | | | |
| | Q162030000 | TUERCA EXAGONAL M5 | HEXAGONAL NUT M5 | 2 | | | | | | | |
| 14 | Z601114000 | MANGUERA ENTRADA AGUA | WATER INTAKE HOSE | 1 | | | | | | | |
| 15 | 3676900000 | TUBO GOMA NEGRA Ø17*10 | BLACK RUBBER PIPE Ø17*10 | 1 | | | | | | | |
| | Q881302000 | ABRAZADERA 12/20 | CLAMP 12/20 | 2 | | | | | | | |
| 16 | 3676900000 | TUBO GOMA NEGRA Ø17*10 | BLACK RUBBER PIPE Ø17*10 | 1 | | | | | | | |
| | Q881302000 | ABRAZADERA 12/20 | CLAMP 12/20 | 2 | | | | | | | |
| 17 | Z201106000 | RACORD EN Y | Y-CONNECTION | 1 | | | | | | | |
| 18 | Z601157000 | TOMA PRESION | PRESSURE INTAKE | 1 | | | | | | | |
| 19 | 3676900000 | TUBO GOMA NEGRA Ø17*10 | BLACK RUBBER PIPE Ø17*10 | 1 | | | | | | | |
| | Q881302000 | ABRAZADERA 12/20 | CLAMP 12/20 | 2 | | | | | | | |
| 20 | 3676900000 | TUBO GOMA NEGRA Ø17*10 | BLACK RUBBER PIPE Ø17*10 | 1 | | | | | | | |
| | Q881302000 | ABRAZADERA 12/20 | CLAMP 12/20 | 2 | | | | | | | |

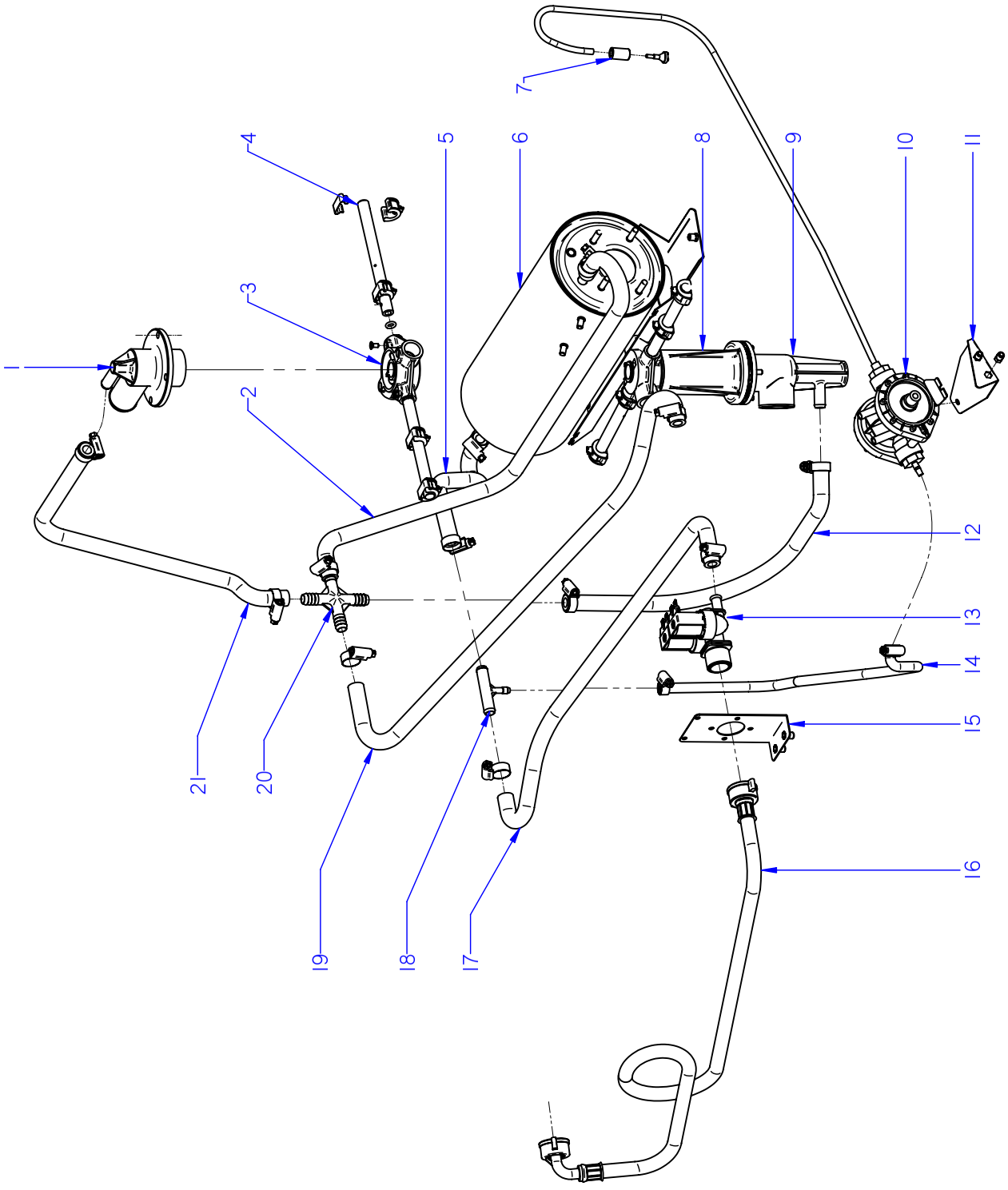


ITEM MARCADO EN COLOR = REPUESTO RECOMENDADO
COLOURED ITEM = RECOMMENDED SPARE PART

| N plano | Firma | Fecha | Aparato | Lamina | |
|---|---|---|---|---|---|
| C-2115 | | 2009-10 | CONJUNTO FUNCIONAL ACLARADO<br>LAVAVASOS LVC-15 / 21 / 21B | 6 | Fagor Industrial S.Coop.<br>Oñate |

| MOD. | LAVAVASOS | ZONA | CONJUNTO FUNCIONAL ACLARADO | PLANO | C-2115 |
|---|---|---|---|---|---|

| ITEM | CODIGO | DENOMINACION | TEXTO | LVC-15 | LVC-21 | LVC-21B | | | | | NOTAS |
|---|---|---|---|---|---|---|---|---|---|---|---|
| 1 | Z410703000 | SOPORTE DISTRIBUIDOR SUPER. | UPPER DISTRIBUTION SUPPORT | 1 | 1 | 1 | | | | | |
| | Q232040000 | ARANDELA A6 | WASHER A6 | 4 | 4 | 4 | | | | | |
| | Q262040000 | ARANDELA GROW. A6 A.304 | WASHER GROW. A6 A.304 | 4 | 4 | 4 | | | | | |
| | Q162040000 | TUERCA EXAGONAL M6 | HEXAGONAL NUT M6 | 4 | 4 | 4 | | | | | |
| 2 | 3676900000 | TUBO GOMA NEGRA Ø17*10 | BLACK RUBBER PIPE Ø17*10 | 1 | 1 | 1 | | | | | |
| | Q881302000 | ABRAZADERA 12/20 | CLAMP 12/20 | 2 | 2 | 2 | | | | | |
| 3 | Z410704000 | CRUCETA | CROSSPIECE | 2 | 2 | 2 | | | | | |
| | Q152016000 | TORNILLO ESPECIAL M.5X0.8 | SPECIAL BOLT M.5X0.8 | 2 | 2 | 2 | | | | | |
| | Z410705000 | CASQUILLO CRUCETA | CROSSPIECE BUSHING | 4 | 4 | 4 | | | | | |
| 4 | Z461901000 | RAMA ACLARADO B | RINSE BRANCH B | 2 | _ | _ | | | | | |
| 4 | Z441902000 | RAMA ACLARADO B | RINSE BRANCH B | _ | 2 | 2 | | | | | |
| S/Nº | Z461902000 | RAMA ACLARADO A | RINSE BRANCH A | 2 | _ | _ | | | | | |
| S/Nº | Z441901000 | RAMA ACLARADO A | RINSE BRANCH A | _ | 2 | 2 | | | | | |
| | Z201905000 | TOBERA ACLARADO | RINSE NOZZLE | 8 | _ | _ | | | | | |
| | Z211903000 | TOBERA ACLARADO | RINSE NOZZLE | _ | 10 | 10 | | | | | |
| | Z201906000 | ENGANCHE TOB. ACLA.19728 | NOZZLE LATCH RINSE.19728 | 8 | _ | _ | | | | | |
| | Q307036000 | JUNTA TORICA 5,28X8,84X1,78 | O-RING 5.28X8.84X1.78 | 8 | _ | _ | | | | | |
| | Q042021000 | TORNILL. AVELLANADO M4X10 A304 | COUNTERSUNK BOLT M4X10 A3( | 4 | 4 | 4 | | | | | |
| 5 | 3676900000 | TUBO GOMA NEGRA Ø17*10 | BLACK RUBBER PIPE Ø17*10 | 1 | 1 | 1 | | | | | |
| | Q881302000 | ABRAZADERA 12/20 | CLAMP 12/20 | 2 | 2 | 2 | | | | | |
| 6 | 12022893 | CALDERIN LAVAVASOS 10-2 | GLASSWASHER BOILER 10-2 | 1 | 1 | 1 | | | | | |
| 7 | Z701152000 | PESO FILTRO | FILTER WEIGHT | 1 | 1 | 1 | | | | | |
| 8 | Z410701000 | SOPORTE INFERIOR CUADRO | LOWER SUPPORT BRACKET | 1 | 1 | 1 | | | | | |
| 9 | Z410702000 | PASAMUROS CESTO CUADRADO | SQUARE BASKET WALL BUSHIN( | 1 | 1 | 1 | | | | | |
| | Q232030000 | ARANDELA A5 | WASHER A5 | 4 | 4 | 4 | | | | | |
| | Q262030000 | ARANDELA GROW. A5 A.304 | WASHER GROW. A5 A.304 | 4 | 4 | 4 | | | | | |
| | Q162030000 | TUERCA EXAGONAL M5 | HEXAGONAL NUT M5 | 4 | 4 | 4 | | | | | |
| 10 | Z211109000 | DOSIFICADOR TENSOACTIVO N-6 | SURFACE ACT. DISP. N-6 | 1 | 1 | 1 | | | | | ELIMINADO 18.06.2012 |
| 10 | 12045206 | DOSIFICADOR_ABRILLANTADOR_A( | RINSE AID DISPENSER | 1 | 1 | 1 | | | | | INTRODUCIDO 18.06.2012 |
| S/Nº | Z448618000 | CONDUCTO ABRILLANTADOR | POLISH DUCT | 1 | 1 | 1 | | | | | |
| | | | | | | | | | | | |

| MOD. | LAVAVASOS | ZONA | CONJUNTO FUNCIONAL ACLARADO | PLANO | C-2115 |
|---|---|---|---|---|---|

| ITEM | CODIGO | DENOMINACION | TEXTO | LVC-15 | LVC-21 | LVC-21B | | | | | NOTAS |
|---|---|---|---|---|---|---|---|---|---|---|---|
| 11 | Z401116000 | SOPORTE DOSIFICADOR | DISPENSER SUPPORT | 1 | 1 | 1 | | | | | |
| | Q242030000 | ARANDELA ABANICO A5 A.304 | FAN WASHER A5 A.304 | 4 | 4 | 4 | | | | | |
| | Q152004000 | TORNILLO APLASTADO M5x13 A304 | FLAT HEADED BOLT M5x13 A304 | 2 | 2 | 2 | | | | | |
| 12 | 3676900000 | TUBO GOMA NEGRA Ø17*10 | BLACK RUBBER PIPE Ø17*10 | 1 | 1 | 1 | | | | | |
| | Q881302000 | ABRAZADERA 12/20 | CLAMP 12/20 | 2 | 2 | 2 | | | | | |
| 13 | P255001000 | ELECTROVALVULA DOBLE | DOUBLE SOLENOID VALVE | 1 | 1 | 1 | | | | | |
| 14 | 3704000000 | TUBO GOMA NEGRA Ø10,5*5 | BLACK RUBBER PIPE Ø10,5*5 | 1 | 1 | 1 | | | | | |
| | Q881308000 | ABRAZADERA 8/14 | CLAMP 8/14 | 2 | 2 | 2 | | | | | |
| 15 | Z401111000 | SOPORTE ELECTROVALVULA | SOLENOID VLVE SUPPORT | 1 | 1 | _ | | | | | |
| | Q242030000 | ARANDELA ABANICO A5 A.304 | FAN WASHER A5 A.304 | 2 | 2 | _ | | | | | |
| | Q152004000 | TORNILLO APLASTADO M5x13 A304 | FLAT HEADED BOLT M5x13 A304 | 2 | 2 | _ | | | | | |
| | Q152024000 | TORNILLO AVELLANADO M4X8 A304 | COUNTERSUNK BOLT M4X8 A30 | 2 | 2 | _ | | | | | |
| 16 | Z601114000 | MANGUERA ENTRADA AGUA | WATER INTAKE HOSE | 1 | 1 | 1 | | | | | |
| 17 | 3676900000 | TUBO GOMA NEGRA Ø17*10 | BLACK RUBBER PIPE Ø17*10 | 1 | 1 | 1 | | | | | |
| | Q881302000 | ABRAZADERA 12/20 | CLAMP 12/20 | 2 | 2 | 2 | | | | | |
| 18 | Z601157000 | TOMA PRESION | PRESSURE INTAKE | 1 | 1 | 1 | | | | | |
| 19 | 3676900000 | TUBO GOMA NEGRA Ø17*10 | BLACK RUBBER PIPE Ø17*10 | 1 | 1 | 1 | | | | | |
| | Q881302000 | ABRAZADERA 12/20 | CLAMP 12/20 | 2 | 2 | 2 | | | | | |
| 20 | Z401108000 | RACORD EN CRUZ | DIAGONAL CONNECTION | 1 | 1 | 1 | | | | | |
| 21 | 3676900000 | TUBO GOMA NEGRA Ø17*10 | BLACK RUBBER PIPE Ø17*10 | 1 | 1 | 1 | | | | | |
| | Q881302000 | ABRAZADERA 12/20 | CLAMP 12/20 | 2 | 2 | 2 | | | | | |
| | | | | | | | | | | | |
| | | | | | | | | | | | |
| | | | | | | | | | | | |
| | | | | | | | | | | | |
| | | | | | | | | | | | |
| | | | | | | | | | | | |
| | | | | | | | | | | | |
| | | | | | | | | | | | |
| | | | | | | | | | | | |
| | | | | | | | | | | | |

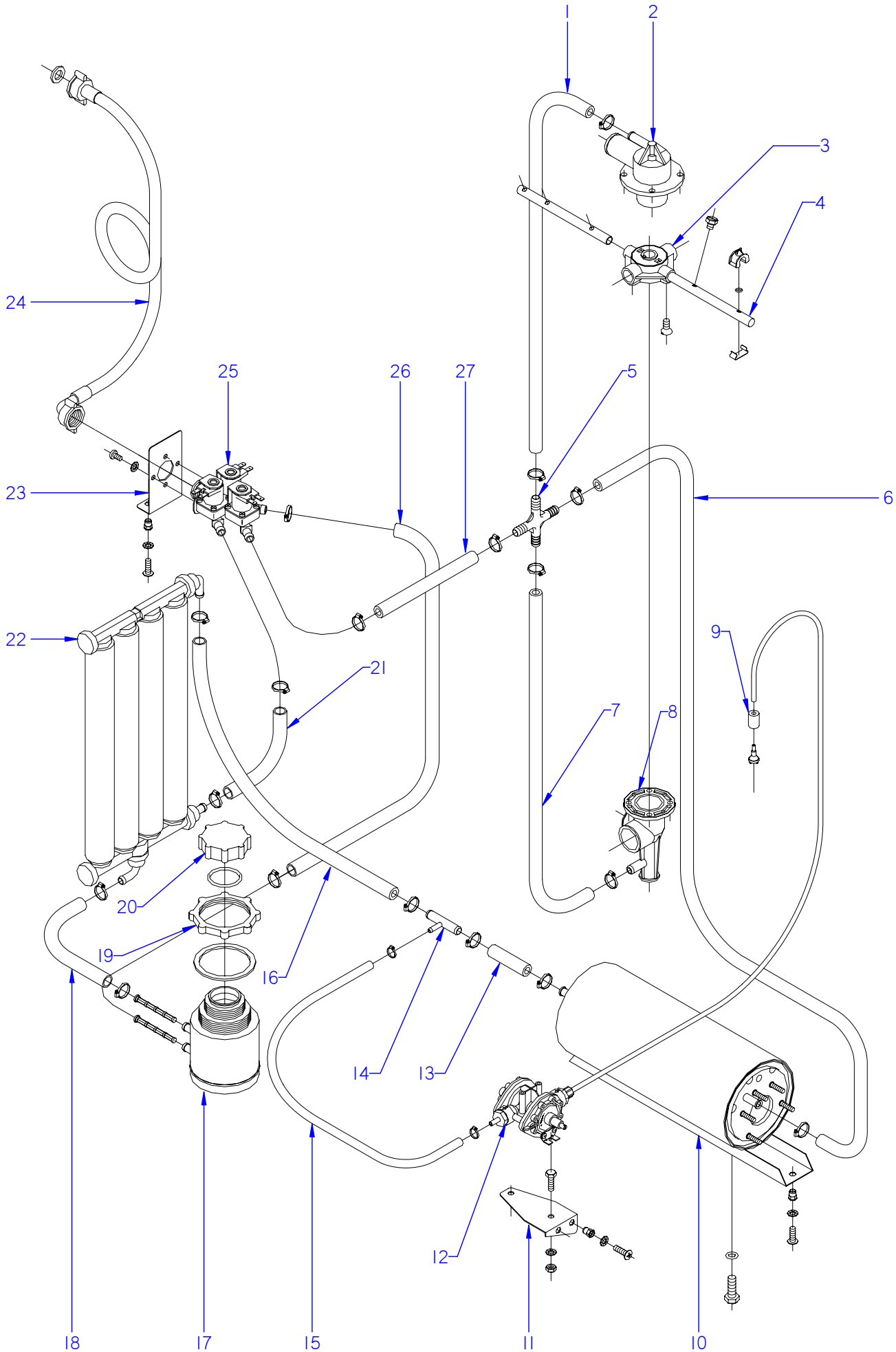


ITEM MARCADO EN COLOR = REPUESTO RECOMENDADO
COLOURED ITEM = RECOMMENDED SPARE PART

| N plano | Firma | Fecha | Aparato | CONJUNTO FUNCIONAL ACLARADO | Lamina | |
|---|---|---|---|---|---|---|
| C-2116 | | 2009-10 | LAVAVASOS LVC-15D / LVC-21D | | 7 | Fagor Industrial S.Coop. FAGOR Oñate |

| MOD. | LAVAVASOS | ZONA | CONJUNTO FUNCIONAL ACLARADO | PLANO | C-2116 |
|---|---|---|---|---|---|

| ITEM | CODIGO | DENOMINACION | TEXTO | LVC-15D | LVC-21D | | | | | | NOTAS |
|---|---|---|---|---|---|---|---|---|---|---|---|
| 1 | 3676900000 | TUBO GOMA NEGRA Ø17*10 | BLACK RUBBER PIPE Ø17*10 | 1 | 1 | | | | | | |
| | Q881302000 | ABRAZADERA 12/20 | CLAMP 12/20 | 2 | 2 | | | | | | |
| 2 | Z410703000 | SOPORTE DISTRIBUIDOR SUPER. | UPPER DISTRIBUTION SUPPORT | 1 | 1 | | | | | | |
| | Q232040000 | ARANDELA A6 | WASHER A6 | 4 | 4 | | | | | | |
| | Q262040000 | ARANDELA GROW. A6 A.304 | WASHER GROW. A6 A.304 | 4 | 4 | | | | | | |
| | Q162040000 | TUERCA EXAGONAL M6 | HEXAGONAL NUT M6 | 4 | 4 | | | | | | |
| 3 | Z410704000 | CRUCETA | CROSSPIECE | 2 | 2 | | | | | | |
| | Q152016000 | TORNILLO ESPECIAL M.5X0.8 | SPECIAL BOLT M.5X0.8 | 2 | 2 | | | | | | |
| | Z410705000 | CASQUILLO CRUCETA | CROSSPIECE BUSHING | 4 | 4 | | | | | | |
| 4 | Z461901000 | RAMA ACLARADO B | RINSE BRANCH B | 2 | _ | | | | | | |
| 4 | Z441902000 | RAMA ACLARADO B | RINSE BRANCH B | _ | 2 | | | | | | |
| S/Nº | Z461902000 | RAMA ACLARADO A | RINSE BRANCH A | 2 | _ | | | | | | |
| S/Nº | Z441901000 | RAMA ACLARADO A | RINSE BRANCH A | _ | 2 | | | | | | |
| | Z201905000 | TOBERA ACLARADO | RINSE NOZZLE | 8 | _ | | | | | | |
| | Z211903000 | TOBERA ACLARADO | RINSE NOZZLE | _ | 10 | | | | | | |
| | Z201906000 | ENGANCHE TOB. ACLA.19728 | NOZZLE LATCH RINSE.19728 | 8 | _ | | | | | | |
| | Q307036000 | JUNTA TORICA 5,28X8,84X1,78 | O-RING 5.28X8.84X1.78 | 8 | _ | | | | | | |
| | Q042021000 | TORNILL. AVELLANADO M4X10 A304 | COUNTERSUNK BOLT M4X10 A3( | 4 | 4 | | | | | | |
| 5 | Z401108000 | RACORD EN CRUZ | DIAGONAL CONNECTION | 1 | 1 | | | | | | |
| 6 | 3676900000 | TUBO GOMA NEGRA Ø17*10 | BLACK RUBBER PIPE Ø17*10 | 1 | 1 | | | | | | |
| | Q881302000 | ABRAZADERA 12/20 | CLAMP 12/20 | 2 | 2 | | | | | | |
| 7 | 3676900000 | TUBO GOMA NEGRA Ø17*10 | BLACK RUBBER PIPE Ø17*10 | 1 | 1 | | | | | | |
| | Q881302000 | ABRAZADERA 12/20 | CLAMP 12/20 | 2 | 2 | | | | | | |
| 8 | Z410702000 | PASAMUROS CESTO CUADRADO | SQUARE BASKET WALL BUSHIN( | 1 | 1 | | | | | | |
| | Q232030000 | ARANDELA A5 | WASHER A5 | 4 | 4 | | | | | | |
| | Q262030000 | ARANDELA GROW. A5 A.304 | WASHER GROW. A5 A.304 | 4 | 4 | | | | | | |
| | Q162030000 | TUERCA EXAGONAL M5 | HEXAGONAL NUT M5 | 4 | 4 | | | | | | |
| 9 | Z701152000 | PESO FILTRO | FILTER WEIGHT | 1 | 1 | | | | | | |
| 10 | 12022893 | CALDERIN LAVAVASOS 10-2 | GLASSWASHER BOILER 10-2 | 1 | 1 | | | | | | |
| | | | | | | | | | | | |
| | | | | | | | | | | | |

| MOD. | LAVAVASOS | ZONA | CONJUNTO FUNCIONAL ACLARADO | PLANO | C-2116 |
|---|---|---|---|---|---|

| ITEM | CODIGO | DENOMINACION | TEXTO | LVC-15D | LVC-21D | | | | | | NOTAS |
|---|---|---|---|---|---|---|---|---|---|---|---|
| 11 | Z401116000 | SOPORTE DOSIFICADOR | DISPENSER SUPPORT | 1 | 1 | | | | | | |
| | Q242030000 | ARANDELA ABANICO A5 A.304 | FAN WASHER A5 A.304 | 4 | 4 | | | | | | |
| | Q152004000 | TORNILLO APLASTADO M5x13 A304 | FLAT HEADED BOLT M5x13 A304 | 2 | 2 | | | | | | |
| 10 | Z211109000 | DOSIFICADOR TENSOACTIVO N-6 | SURFACE ACT. DISP. N-6 | 1 | 1 | | | | | | |
| S/Nº | Z448618000 | CONDUCTO ABRILLANTADOR | POLISH DUCT | 1 | 1 | | | | | | |
| 13 | 3676900000 | TUBO GOMA NEGRA Ø17*10 | BLACK RUBBER PIPE Ø17*10 | 1 | 1 | | | | | | |
| | Q881302000 | ABRAZADERA 12/20 | CLAMP 12/20 | 2 | 2 | | | | | | |
| 14 | Z601157000 | TOMA PRESION | PRESSURE INTAKE | 1 | 1 | | | | | | |
| 15 | 3704000000 | TUBO GOMA NEGRA Ø10,5*5 | BLACK RUBBER PIPE Ø10,5*5 | 1 | 1 | | | | | | |
| | Q881308000 | ABRAZADERA 8/14 | CLAMP 8/14 | 2 | 2 | | | | | | |
| 16 | 3676900000 | TUBO GOMA NEGRA Ø17*10 | BLACK RUBBER PIPE Ø17*10 | 1 | 1 | | | | | | |
| | Q881302000 | ABRAZADERA 12/20 | CLAMP 12/20 | 2 | 2 | | | | | | |
| 17 | Z471102000 | DEPOSITO SOLDADO | WELDED TANK | 1 | 1 | | | | | | |
| | Z471105000 | FILTRO (BITRON 06281.01) | FILTER (BITRON 06281.01) | 2 | 2 | | | | | | |
| 18 | 3676900000 | TUBO GOMA NEGRA Ø17*10 | BLACK RUBBER PIPE Ø17*10 | 1 | 1 | | | | | | |
| | Q881302000 | ABRAZADERA 12/20 | CLAMP 12/20 | 2 | 2 | | | | | | |
| 19 | Z471106000 | TUERCA (BITRON 27414.00) | NUT (BITRON 27414.00) | 1 | 1 | | | | | | |
| | Z471107000 | JUNTA TUERCA (BITRON 15702.01) | NUT SEAL (BITRON 15702.01) | 1 | 1 | | | | | | |
| 20 | Z471108000 | TAPON (BITRON 27415.00) | PLUG (BITRON 27415.00) | 1 | 1 | | | | | | |
| | Z471109000 | JUNTA TAPON (BITRON 06485.02) | PLUG SEAL (BITRON 06485.02) | 1 | 1 | | | | | | |
| 21 | 3676900000 | TUBO GOMA NEGRA Ø17*10 | BLACK RUBBER PIPE Ø17*10 | 1 | 1 | | | | | | |
| | Q881302000 | ABRAZADERA 12/20 | CLAMP 12/20 | 2 | 2 | | | | | | |
| 22 | Z471101000 | DESCALCIFICADOR 4 COLUMNAS | WATER SOFTENER 4 COLUMN | 1 | 1 | | | | | | |
| | Z471111000 | SOPOR. SUPERIOR DESCALCIFICAI | UPPER W-SOFT. SUPPORT. | 1 | _ | | | | | | |
| | Z491101000 | SOPOR. SUPERIOR DESCALCIFICAI | UPPER W-SOFT. SUPPORT. | _ | 1 | | | | | | |
| | Z471112000 | SOPOR. INFERIOR DESCALCIFICAD | LOWER W-SOFT. SUPPORT. | 1 | 1 | | | | | | |
| 23 | Z401111000 | SOPORTE ELECTROVALVULA | SOLENOID VLVE SUPPORT | 1 | 1 | | | | | | |
| | Q242030000 | ARANDELA ABANICO A5 A.304 | FAN WASHER A5 A.304 | 2 | 2 | | | | | | |
| | Q152004000 | TORNILLO APLASTADO M5x13 A304 | FLAT HEADED BOLT M5x13 A304 | 2 | 2 | | | | | | |
| | Q152024000 | TORNILLO AVELLANADO M4X8 A304 | COUNTERSUNK BOLT M4X8 A30- | 2 | 2 | | | | | | |
| 24 | Z602121000 | MANGUERA ENTRADA AGUA | WATER INTAKE HOSE | 1 | 1 | | | | | | |

| MOD. | LAVAVASOS | ZONA | CONJUNTO FUNCIONAL ACLARADO | PLANO | C-2116 |
|---|---|---|---|---|---|

| ITEM | CODIGO | DENOMINACION | TEXTO | LVC-15D | LVC-21D | | | | | | NOTAS |
|---|---|---|---|---|---|---|---|---|---|---|---|
| 25 | Z611124000 | (12Z6111240) ELECTROVAL.TRIPLE | (12Z6111240) SOLENOID VALVE.T | 1 | 1 | | | | | | |
| 26 | 3676900000 | TUBO GOMA NEGRA Ø17*10 | BLACK RUBBER PIPE Ø17*10 | 1 | 1 | | | | | | |
| | Q881302000 | ABRAZADERA 12/20 | CLAMP 12/20 | 2 | 2 | | | | | | |
| 27 | 3676900000 | TUBO GOMA NEGRA Ø17*10 | BLACK RUBBER PIPE Ø17*10 | 1 | 1 | | | | | | |
| | Q881302000 | ABRAZADERA 12/20 | CLAMP 12/20 | 2 | 2 | | | | | | |

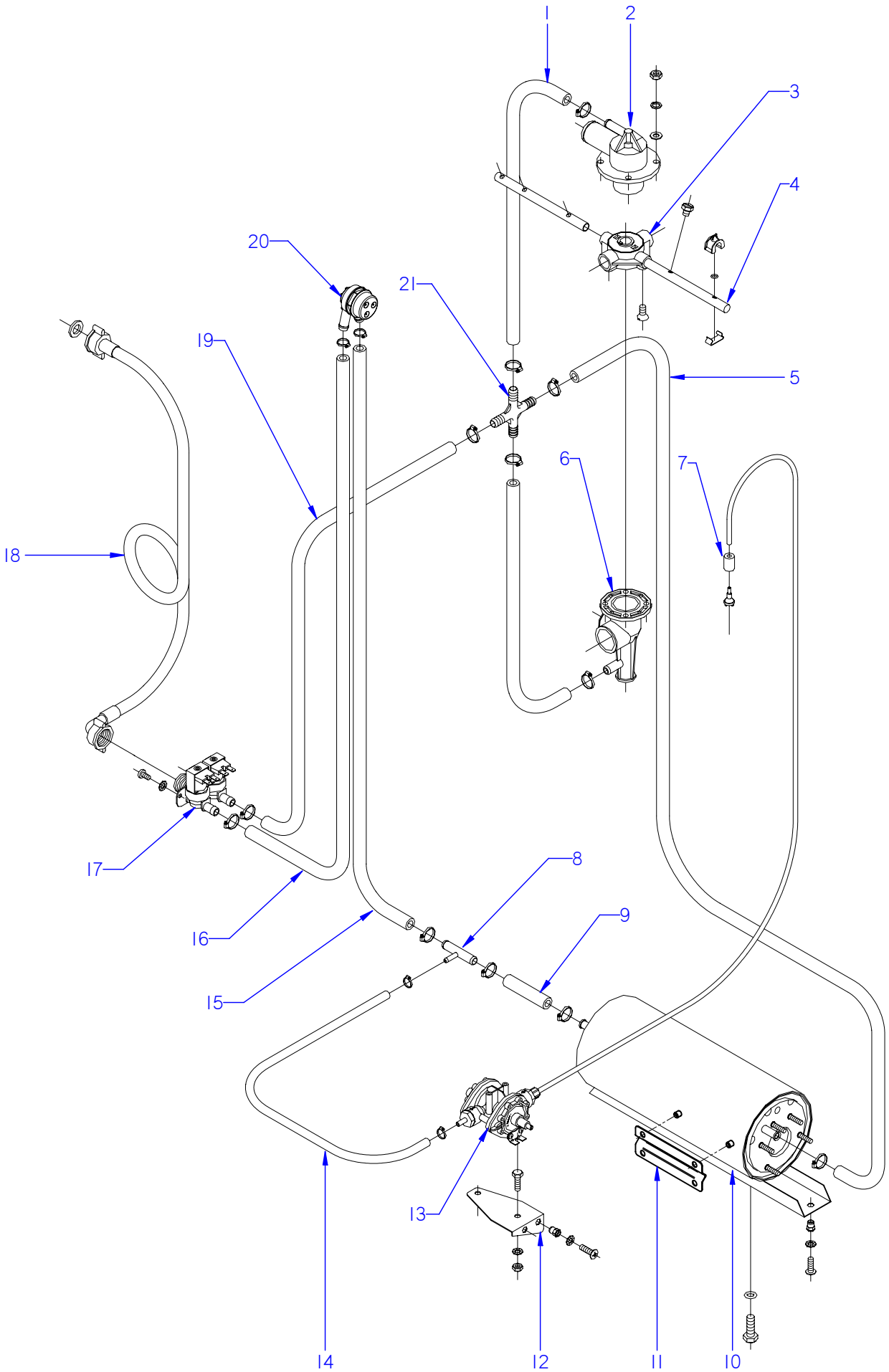


ITEM MARCADO EN COLOR = REPUESTO RECOMENDADO
COLOURED ITEM = RECOMMENDED SPARE PART

| N plano | Firma | Fecha | Aparato | | Lamina | |
|---|---|---|---|---|---|---|
| C-2117 | | 2009-10 | CONJUNTO FUNCIONAL ACLARADO<br>LAVAVASOS LVC-21C / 21W | | 8 | Fagor Industrial S.Coop. FAGOR<br>Oñate |

| MOD. | LAVAVASOS | ZONA | CONJUNTO FUNCIONAL ACLARADO | PLANO | C-2117 |
|---|---|---|---|---|---|

| ITEM | CODIGO | DENOMINACION | TEXTO | LVC-21C | LVC-21W | | | | | | NOTAS |
|---|---|---|---|---|---|---|---|---|---|---|---|
| 1 | 3676900000 | TUBO GOMA NEGRA Ø17*10 | BLACK RUBBER PIPE Ø17*10 | 1 | 1 | | | | | | |
| | Q881302000 | ABRAZADERA 12/20 | CLAMP 12/20 | 2 | 2 | | | | | | |
| 2 | Z410703000 | SOPORTE DISTRIBUIDOR SUPER. | UPPER DISTRIBUTION SUPPORT | 1 | 1 | | | | | | |
| | Q232040000 | ARANDELA A6 | WASHER A6 | 4 | 4 | | | | | | |
| | Q262040000 | ARANDELA GROW. A6 A.304 | WASHER GROW. A6 A.304 | 4 | 4 | | | | | | |
| | Q162040000 | TUERCA EXAGONAL M6 | HEXAGONAL NUT M6 | 4 | 4 | | | | | | |
| 3 | Z410704000 | CRUCETA | CROSSPIECE | 2 | 2 | | | | | | |
| | Q152016000 | TORNILLO ESPECIAL M.5X0.8 | SPECIAL BOLT M.5X0.8 | 2 | 2 | | | | | | |
| | Z410705000 | CASQUILLO CRUCETA | CROSSPIECE BUSHING | 4 | 4 | | | | | | |
| 4 | Z441902000 | RAMA ACLARADO B | RINSE BRANCH B | 2 | 2 | | | | | | |
| S/Nº | Z441901000 | RAMA ACLARADO A | RINSE BRANCH A | 2 | 2 | | | | | | |
| | Z211903000 | TOBERA ACLARADO | RINSE NOZZLE | 10 | 10 | | | | | | |
| | Q042021000 | TORNILL. AVELLANADO M4X10 A304 | COUNTERSUNK BOLT M4X10 A3( | 4 | 4 | | | | | | |
| 5 | 3676900000 | TUBO GOMA NEGRA Ø17*10 | BLACK RUBBER PIPE Ø17*10 | 1 | 1 | | | | | | |
| | Q881302000 | ABRAZADERA 12/20 | CLAMP 12/20 | 2 | 2 | | | | | | |
| 6 | Z410702000 | PASAMUROS CESTO CUADRADO | SQUARE BASKET WALL BUSHIN( | 1 | 1 | | | | | | |
| | Q232030000 | ARANDELA A5 | WASHER A5 | 4 | 4 | | | | | | |
| | Q262030000 | ARANDELA GROW. A5 A.304 | WASHER GROW. A5 A.304 | 4 | 4 | | | | | | |
| | Q162030000 | TUERCA EXAGONAL M5 | HEXAGONAL NUT M5 | 4 | 4 | | | | | | |
| 7 | Z701152000 | PESO FILTRO | FILTER WEIGHT | 1 | 1 | | | | | | |
| 8 | Z601157000 | TOMA PRESION | PRESSURE INTAKE | 1 | 1 | | | | | | |
| 9 | 3676900000 | TUBO GOMA NEGRA Ø17*10 | BLACK RUBBER PIPE Ø17*10 | 1 | 1 | | | | | | |
| | Q881302000 | ABRAZADERA 12/20 | CLAMP 12/20 | 2 | 2 | | | | | | |
| 10 | 12022893 | CALDERIN LAVAVASOS 10-2 | GLASSWASHER BOILER 10-2 | 1 | _ | | | | | | |
| 10 | 12022893 | CALDERIN LAVAVASOS 10-2 | GLASSWASHER BOILER 10-2 | _ | 1 | | | | | | ELIMINADO 15.10.12 |
| 10 | 12046994 | CALDERIN COMPLETO LVS. W | GLASSWASHER BOILER 10-2 | _ | 1 | | | | | | INTRODUCIDO 15.10.12 |
| 11 | Z748008000 | SOPORTE BULBO TERMOSTATO | THERMOSTAT BULB SUPPORT | 1 | 1 | | | | | | |
| | Q152018000 | PERNO SOLDADO M6X10 | WELDED BOLT M6X10 | 2 | 2 | | | | | | |
| | Q162040000 | TUERCA EXAGONAL M6 | HEXAGONAL NUT M6 | 2 | 2 | | | | | | |
| | Q232040000 | ARANDELA A6 | WASHER A6 | 2 | 2 | | | | | | |
| | Q262040000 | ARANDELA GROW. A6 A.304 | WASHER GROW. A6 A.304 | 2 | 2 | | | | | | |

| MOD. | LAVAVASOS | ZONA | CONJUNTO FUNCIONAL ACLARADO | PLANO | C-2117 |
|---|---|---|---|---|---|

| ITEM | CODIGO | DENOMINACION | TEXTO | LVC-21C | LVC-21W | | | | | | NOTAS |
|---|---|---|---|---|---|---|---|---|---|---|---|
| 12 | Z401116000 | SOPORTE DOSIFICADOR | DISPENSER SUPPORT | 1 | 1 | | | | | | |
| | Q242030000 | ARANDELA ABANICO A5 A.304 | FAN WASHER A5 A.304 | 4 | 4 | | | | | | |
| | Q152004000 | TORNILLO APLASTADO M5x13 A304 | FLAT HEADED BOLT M5x13 A304 | 2 | 2 | | | | | | |
| 13 | Z211109000 | DOSIFICADOR TENSOACTIVO N-6 | SURFACE ACT. DISP. N-6 | 1 | 1 | | | | | | ELIMINADO 18.06.2012 |
| 13 | 12045206 | DOSIFICADOR_ABRILLANTADOR_A( | RINSE AID DISPENSER | 1 | 1 | | | | | | INTRODUCIDO 18.06.2012 |
| S/Nº | Z448618000 | CONDUCTO ABRILLANTADOR | POLISH DUCT | 1 | 1 | | | | | | |
| 14 | 3704000000 | TUBO GOMA NEGRA Ø10,5*5 | BLACK RUBBER PIPE Ø10,5*5 | 1 | 1 | | | | | | |
| | Q881308000 | ABRAZADERA 8/14 | CLAMP 8/14 | 2 | 2 | | | | | | |
| 15 | 3676900000 | TUBO GOMA NEGRA Ø17*10 | BLACK RUBBER PIPE Ø17*10 | 1 | 1 | | | | | | |
| | Q881302000 | ABRAZADERA 12/20 | CLAMP 12/20 | 2 | 2 | | | | | | |
| 16 | 3676900000 | TUBO GOMA NEGRA Ø17*10 | BLACK RUBBER PIPE Ø17*10 | 1 | 1 | | | | | | |
| | Q881302000 | ABRAZADERA 12/20 | CLAMP 12/20 | 2 | 2 | | | | | | |
| 17 | P255001000 | ELECTROVALVULA DOBLE | DOUBLE SOLENOID VALVE | 1 | 1 | | | | | | |
| 18 | Z601114000 | MANGUERA ENTRADA AGUA | WATER INTAKE HOSE | 1 | 1 | | | | | | |
| 19 | 3676900000 | TUBO GOMA NEGRA Ø17*10 | BLACK RUBBER PIPE Ø17*10 | 1 | 1 | | | | | | |
| | Q881302000 | ABRAZADERA 12/20 | CLAMP 12/20 | 2 | 2 | | | | | | |
| 20 | Z231106000 | VALVULA ANTIRRETORNO | NON-RETURN VALVE | 1 | 1 | | | | | | |
| | Q881302000 | ABRAZADERA 12/20 | CLAMP 12/20 | 2 | 2 | | | | | | |
| 21 | Z401108000 | RACORD EN CRUZ | DIAGONAL CONNECTION | 1 | 1 | | | | | | |

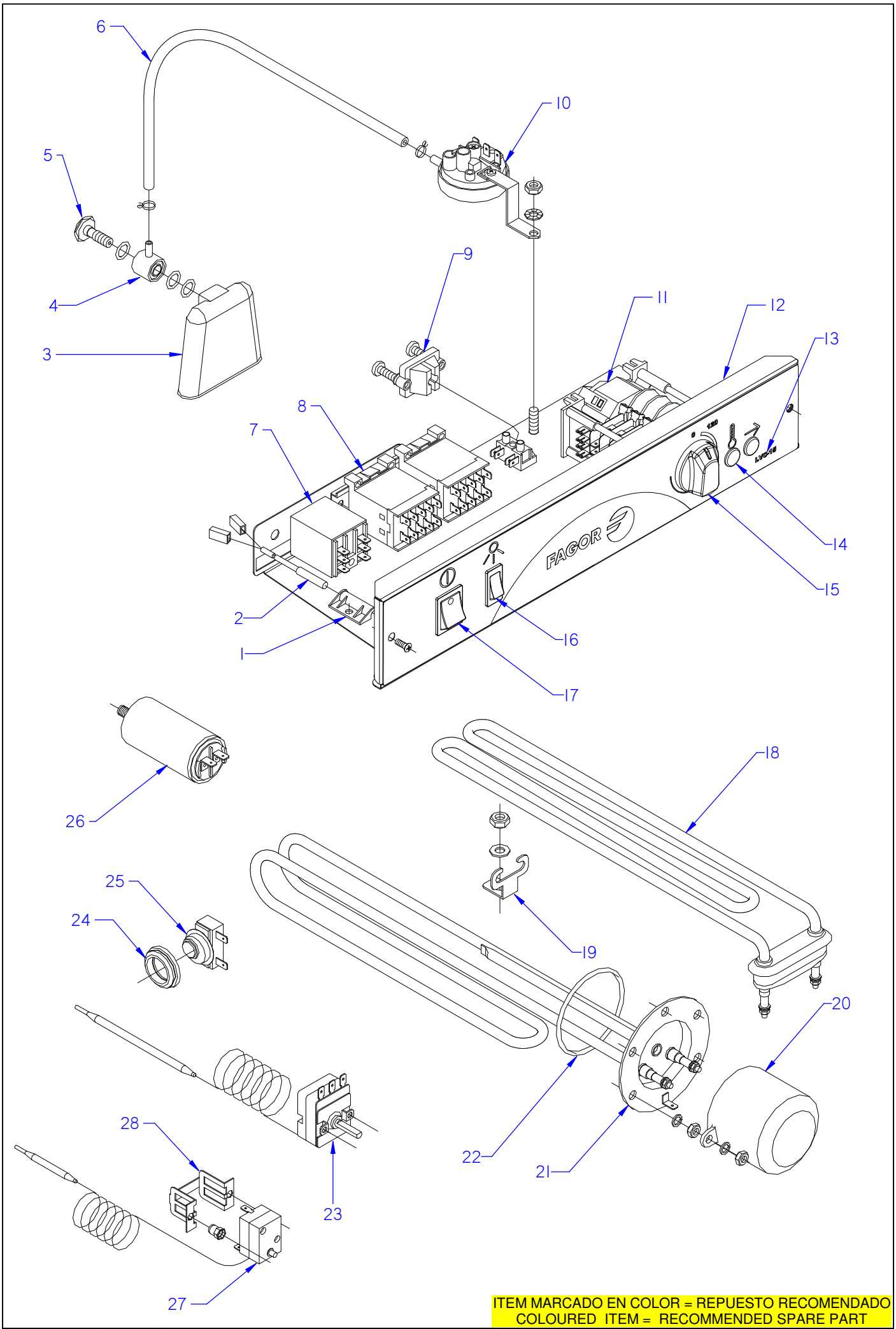


ITEM MARCADO EN COLOR = REPUESTO RECOMENDADO
COLOURED ITEM = RECOMMENDED SPARE PART

| N plano | Firma | Fecha | Aparato | | Lamina | |
|---|---|---|---|---|---|---|
| C-2118 | | 2009-10 | CONJUNTO FUNCIONAL ELECTRICO<br>LAVAVASOS LVC-12 / 15 / 21 | | 9 | Fagor Industrial S.Coop. FAGOR<br>Oñate |

| MOD. | LAVAVASOS | ZONA | CONJUNTO FUNCIONAL ELECTRICO | PLANO | C-2118 |
|---|---|---|---|---|---|

| ITEM | CODIGO | DENOMINACION | TEXTO | LVC-12 | LVC-15 | LVC-21 | | | | | NOTAS |
|---|---|---|---|---|---|---|---|---|---|---|---|
| 1 | Z203010000 | AMARRE INTERRUP. MAGNETICO | MAGNETIC SWITCH FASTENER | 1 | _ | _ | | | | | INTRODUCIDO 15.10.2012 |
| 1 | Z203010000 | AMARRE INTERRUP. MAGNETICO | MAGNETIC SWITCH FASTENER | _ | 1 | 1 | | | | | |
| 2 | Z203009000 | INTERRUPTOR MAGNETICO | MAGNETIC SWITCH | 1 | _ | _ | | | | | INTRODUCIDO 15.10.2012 |
| 2 | Z203009000 | INTERRUPTOR MAGNETICO | MAGNETIC SWITCH | _ | 1 | 1 | | | | | |
| 3 | Z203011000 | CAMARA PRESOSTATO | PRESSURE SWITCH | 1 | 1 | 1 | | | | | |
| 4 | Z203012000 | EMPALME PRESOSTATO | PRESSURE SWITCH CONNEX | 1 | 1 | 1 | | | | | |
| 5 | Z203013000 | TORNILLO PRESOSTATO | PRESSURE SWITCH BOLT | 1 | 1 | 1 | | | | | |
| | Q307003000 | JUNTA TORICA 16.01X10.77X2.62 | O-RING 16.01X10.77X2.62 | 3 | 3 | 3 | | | | | |
| 6 | 3702400000 | TUBO GOMA NEGRO D 8*4 | BLACK RUBBER PIPE Ø 8*4 | 1 | 1 | 1 | | | | | |
| | P102154000 | BRIDA ELASTICA TUBO | ELASTIC PIPE FLANGE | 2 | 2 | 2 | | | | | |
| 7 | Z203062000 | RELE 230V. 16A 50-60 HZ | RELAY 230V. 16A 50-60 HZ | _ | 1 | 1 | | | | | ELIMINADO 15.10.2012 |
| 7 | Z203062000 | RELE 230V. 16A 50-60 HZ | RELAY 230V. 16A 50-60 HZ | 2 | 2 | 2 | | | | | INTRODUCIDO 15.10.2012 |
| 8 | 12024011 | CONTACTOR 230 V. 50-60 HZ | CONTACTOR 230 V. 50-60 HZ | 1 | 1 | 1 | | | | | ELIMINADO 15.10.2012 |
| 8 | 12024011 | CONTACTOR 230 V. 50-60 HZ | CONTACTOR 230 V. 50-60 HZ | 2 | 2 | 2 | | | | | INTRODUCIDO 15.10.2012 |
| 8 | Z203050000 | CONTACT. SIRIUS 3R 230 V.50-60 HZ | CONTACT. SIRIUS 3R 230 V.50/60 | _ | 1 | 1 | | | | | |
| 9 | Z203020000 | RETENEDOR DE CABLE | CABLE HOLDER | 1 | 1 | 1 | | | | | |
| | Z603025000 | REGLETA DE CONEXIONES | CONNECTION STRIP | 1 | 1 | 1 | | | | | |
| 10 | Z403021000 | PRESOSTATO SIMPLE | SIMPLE PRESSURE SWITCH | 1 | 1 | 1 | | | | | |
| | Z602923000 | SOPORTE PRESOSTATO | PRESSURE SWITCH SUPPORT | 1 | 1 | 1 | | | | | |
| | Q082032000 | TORNILLO ALOMADO BZ-3,5X9,5 | CURVED SCREW BZ-3.5x9.5 | 1 | 1 | 1 | | | | | |
| | Q152004000 | TORNILLO APLASTADO M5x13 A304 | FLAT HEADED BOLT M5x13 A304 | 1 | 1 | 1 | | | | | |
| | Q242030000 | ARANDELA ABANICO A5 A.304 | FAN WASHER A5 A.304 | 1 | 1 | 1 | | | | | |
| | Q162030000 | TUERCA EXAGONAL M5 | HEXAGONAL NUT M5 | 1 | 1 | 1 | | | | | |
| 11 | Z403002000 | PROGRAMADOR CICLO | CYCLE PROGRAMMER | 1 | 1 | 1 | | | | | |
| 11 | Z403044000 | PROGRAMADOR CICLO (60 HZ.) | CYCLE PROGRAMMER (60 HZ.) | _ | _ | 1 | | | | | INTRODUCIDO 07.09.09 |
| | Z203007000 | CASQUILLO | BUSHING | 2 | 2 | 2 | | | | | |
| | Q041324000 | TORN. AVELLANADO M4X25 H.ZINC. | HEXAGONAL COUNTERSUNK M4 | 2 | 2 | 2 | | | | | |
| 12 | Z462905000 | FRENTE COMPLETO 12-15 | COMPLETE FRONT 12-15 | 1 | 1 | _ | | | | | ELIMINADO 15.10.2012 |
| 12 | 12046878 | FRENTE COMPLETO FAGOR 12 | COMPLETE FRONT FAGOR 12 | 1 | 1 | _ | | | | | INTRODUCIDO 15.10.2012 |
| 12 | Z442905000 | FRENTE COMPLETO 21 | COMPLETE FRONT 21 | _ | _ | 1 | | | | | ELIMINADO 15.10.2012 |
| 12 | 12046877 | FRENTE COMPLETO FAGOR 21 | COMPLETE FRONT FAGOR 21 | _ | _ | 1 | | | | | INTRODUCIDO 15.10.2012 |

| MOD. | LAVAVASOS | ZONA | CONJUNTO FUNCIONAL ELECTRICO | PLANO | C-2118 |
|---|---|---|---|---|---|

| ITEM | CODIGO | DENOMINACION | TEXTO | LVC-12 | LVC-15 | LVC-21 | | | | | NOTAS |
|---|---|---|---|---|---|---|---|---|---|---|---|
| 13 | Z462904000 | EMBELLECEDOR ADHES. LVC-12 | ADHES. TRIM LVC-12 | 1 | _ | _ | | | | | |
| 13 | Z412902000 | EMBELLECEDOR ADHES. LVC-15 | ADHES. TRIM LVC-15 | _ | 1 | _ | | | | | |
| 13 | Z442904000 | EMBELLECEDOR ADHES. LVC-21 | ADHES. TRIM LVC-21 | _ | _ | 1 | | | | | |
| 14 | 12024254 | PILOTO AMBAR 41227000A4 | AMBER PILOT 41227000A4 | 1 | 2 | 2 | | | | | |
| 15 | Z203069000 | BOTON DE MANDO | CONTROL BUTTON | 1 | 1 | 1 | | | | | |
| 16 | Z203070000 | PULSADOR NEGRO | BLACK BUTTON | _ | 1 | 1 | | | | | |
| 17 | Z203071000 | INTERRUPTOR NEGRO | BLACK SWITCH | 1 | 1 | 1 | | | | | |
| 18 | Z733601000 | RESISTENCIA TANQUE | TANK RESISTOR | 1 | _ | _ | | | | | |
| 18 | R223005000 | RESISTENCIA TANQUE | TANK RESISTOR | _ | 1 | 1 | | | | | |
| 19 | Z603602000 | SOPORTE RESISTENCIATANQUE | TANK RESISTOR SUPPORT | 1 | 1 | 1 | | | | | |
| | Q232040000 | ARANDELA A6 | WASHER A6 | 1 | 1 | 1 | | | | | |
| | Q162040000 | TUERCA EXAGONAL M6 | HEXAGONAL NUT M6 | 1 | 1 | 1 | | | | | |
| 20 | Z401713000 | CAPERUZA RESISTENC. CALDERIN | BOILER RESIST. CAP | 1 | 1 | 1 | | | | | |
| | Q163140000 | TUERCA EXAGONAL M6 LATON | HEXAGONAL NUT M6 BRASS | 2 | 2 | 2 | | | | | |
| | Q242030000 | ARANDELA ABANICO A5 A.304 | FAN WASHER A5 A.304 | 2 | 2 | 2 | | | | | |
| | Q152004000 | TORNILLO APLASTADO M5x13 A304 | FLAT HEADED BOLT M5x13 A304 | 2 | 2 | 2 | | | | | |
| 21 | Z401738000 | RESISTENCIA CALDERIN 2400W | BOILER RESISTOR 2400W | 1 | 1 | _ | | | | | |
| 21 | Z421712000 | RESISTENCIACALDERIN 2800W | BOILER RESISTOR 2800W | _ | _ | 1 | | | | | |
| | Q221301000 | TUERCA EXAG.AUTOBLOCANTE M6 | SELF-LOCK HEX NUT M6 | 2 | 2 | 2 | | | | | |
| | Q163140000 | TUERCA EXAGONAL M6 LATON | HEXAGONAL NUT M6 BRASS | 5 | 5 | 5 | | | | | |
| | Q262040000 | ARANDELA GROW. A6 A.304 | WASHER GROW. A6 A.304 | 5 | 5 | 5 | | | | | |
| 22 | Q307053000 | JUNTA TORICA 43.82X54.48X5.35 | "O" RING 43.82X54.48X5.35 | 1 | 1 | 1 | | | | | |
| 23 | Z393005000 | TERMOSTATO CALDERIN | WASH DRUM THERMOSTAT | 1 | 1 | 1 | | | | | |
| | Q152024000 | TORNILLO AVELLANADO M4X8 A304 | COUNTERSUNK BOLT M4X8 A30 | 2 | 2 | 2 | | | | | |
| 24 | N503017000 | SOPORTE TERMOSTATO 1001713 | THERMOSTAT SUPPORT 100171 | 1 | 1 | 1 | | | | | |
| 25 | Z718405000 | TERMOSTATO DOBLE | DOUBLE THERMOSTAT | 1 | 1 | 1 | | | | | |
| 26 | V817100000 | CONDENSADOR 6 M.F. | CONDENSER 6 M.F. | 1 | 1 | 1 | | | | | |
| 27 | 12023830 | LIMITADOR TECASA P. | TECASA P. LIMITER | 1 | 1 | 1 | | | | | INTRODUCIDO 04.02.2013 |
| 28 | 12022151 | AMARRE LIMITADOR TECASA | LIMITER FASTENING | 1 | 1 | 1 | | | | | INTRODUCIDO 04.02.2013 |
| | | | | | | | | | | | |
| | | | | | | | | | | | |

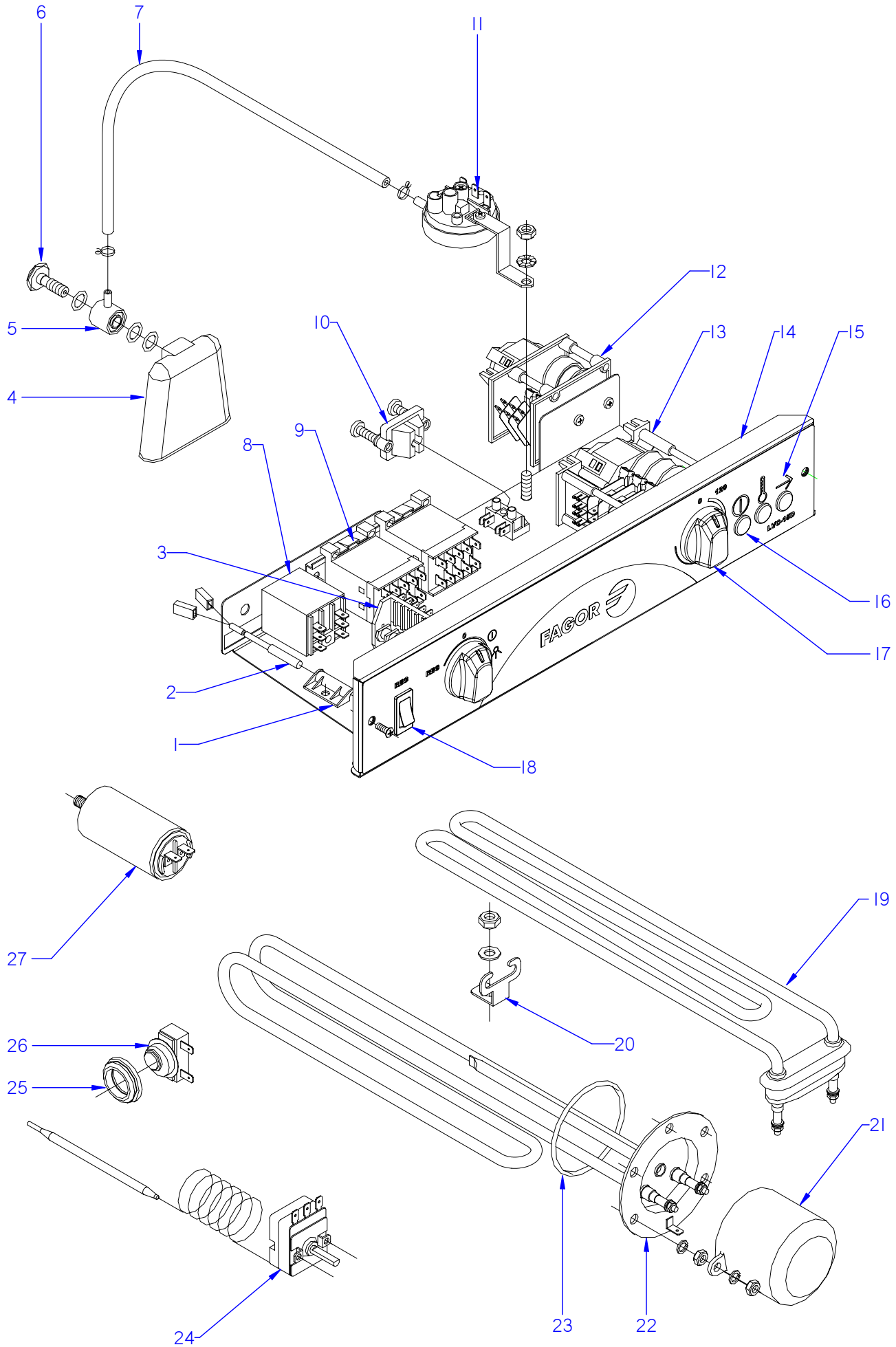


ITEM MARCADO EN COLOR = REPUESTO RECOMENDADO
COLOURED ITEM = RECOMMENDED SPARE PART

| N plano | Firma | Fecha | Aparato | CONJUNTO FUNCIONAL ELECTRICO | Lamina | |
|---|---|---|---|---|---|---|
| C-2119 | | 2009-10 | LAVAVASOS LVC-15D / LVC-21D | | 10 | Fagor Industrial S.Coop. FAGOR Oñate |

| MOD. | LAVAVASOS | ZONA | CONJUNTO FUNCIONAL ELECTRICO | PLANO | C-2119 |
|---|---|---|---|---|---|

| ITEM | CODIGO | DENOMINACION | TEXTO | LVC-15D | LVC-21D | | | | | | NOTAS |
|---|---|---|---|---|---|---|---|---|---|---|---|
| 1 | Z203010000 | AMARRE INTERRUP. MAGNETICO | MAGNETIC SWITCH FASTENER | 1 | 1 | | | | | | |
| 2 | Z203009000 | INTERRUPTOR MAGNETICO | MAGNETIC SWITCH | 1 | 1 | | | | | | |
| 3 | Z433001000 | CONMUTADOR DE FUNCIONES | FUNCTIONS SWITCH | 1 | 1 | | | | | | |
| | Z203007000 | CASQUILLO | BUSHING | 2 | 2 | | | | | | |
| | Q041324000 | TORN. AVELLANADO M4X25 H.ZINC | HEXAGONAL COUNTERSUNK M4 | 2 | 2 | | | | | | |
| 4 | Z203011000 | CAMARA PRESOSTATO | PRESSURE SWITCH | 1 | 1 | | | | | | |
| 5 | Z203012000 | EMPALME PRESOSTATO | PRESSURE SWITCH CONNEX | 1 | 1 | | | | | | |
| 6 | Z203013000 | TORNILLO PRESOSTATO | PRESSURE SWITCH BOLT | 1 | 1 | | | | | | |
| | Q307003000 | JUNTA TORICA 16.01X10.77X2.62 | O-RING 16.01X10.77X2.62 | 3 | 3 | | | | | | |
| 7 | 3702400000 | TUBO GOMA NEGRO D 8*4 | BLACK RUBBER PIPE Ø 8*4 | 1 | 1 | | | | | | |
| | P102154000 | BRIDA ELASTICA TUBO | ELASTIC PIPE FLANGE | 2 | 2 | | | | | | |
| 8 | Z203062000 | RELE 230V. 16A 50-60 HZ | RELAY 230V. 16A 50-60 HZ | 1 | 1 | | | | | | |
| 9 | Z213007000 | CONTACTOR 230 V. 50-60 HZ | CONTACTOR 230 V. 50-60 HZ | 2 | 2 | | | | | | |
| 10 | Z203020000 | RETENEDOR DE CABLE | CABLE HOLDER | 1 | 1 | | | | | | |
| | Z603025000 | REGLETA DE CONEXIONES | CONNECTION STRIP | 1 | 1 | | | | | | |
| | Q032021000 | TORNILLO ALOMADO M4X10 | CURVED SCREW M4X10 | 1 | 1 | | | | | | |
| | Q162020000 | TUERCA EXAGONAL M4 | HEXAGONAL NUT M4 | 1 | 1 | | | | | | |
| 11 | Z403021000 | PRESOSTATO SIMPLE | SIMPLE PRESSURE SWITCH | 1 | 1 | | | | | | |
| | Z602923000 | SOPORTE PRESOSTATO | PRESSURE SWITCH SUPPORT | 1 | 1 | | | | | | |
| | Q082032000 | TORNILLO ALOMADO BZ-3,5X9,5 | CURVED SCREW BZ-3.5x9.5 | 1 | 1 | | | | | | |
| | Q152004000 | TORNILLO APLASTADO M5x13 A304 | FLAT HEADED BOLT M5x13 A304 | 1 | 1 | | | | | | |
| | Q242030000 | ARANDELA ABANICO A5 A.304 | FAN WASHER A5 A.304 | 1 | 1 | | | | | | |
| | Q162030000 | TUERCA EXAGONAL M5 | HEXAGONAL NUT M5 | 1 | 1 | | | | | | |
| 12 | Z613003000 | PROGRAMADOR REGENERACION | REGENERATION PROGRAMMER | 1 | 1 | | | | | | |
| | Q032021000 | TORNILLO ALOMADO M4x10 | CURVED SCREW M4X10 | 2 | 2 | | | | | | |
| 13 | Z403002000 | PROGRAMADOR CICLO | CYCLE PROGRAMMER | 1 | 1 | | | | | | |
| | Z203007000 | CASQUILLO | BUSHING | 2 | 2 | | | | | | |
| | Q041324000 | TORN. AVELLANADO M4X25 H.ZINC | HEXAGONAL COUNTERSUNK M4 | 2 | 2 | | | | | | |
| 14 | Z462905000 | FRENTE COMPLETO 12-15 | COMPLETE FRONT 12-15 | 1 | _ | | | | | | |
| 14 | Z442905000 | FRENTE COMPLETO 21 | COMPLETE FRONT 21 | _ | 1 | | | | | | |
| | Q152004000 | TORNILLO APLASTADO M5x13 A304 | FLAT HEADED BOLT M5x13 A304 | 2 | 2 | | | | | | |

| MOD. | LAVAVASOS | ZONA | CONJUNTO FUNCIONAL ELECTRICO | PLANO | C-2119 |
|---|---|---|---|---|---|

| ITEM | CODIGO | DENOMINACION | TEXTO | LVC-15D | LVC-21D | | | | | | NOTAS |
|---|---|---|---|---|---|---|---|---|---|---|---|
| 15 | Z482904000 | EMBELLECEDOR ADHES. LVC-15D | ADHES. TRIM LVC-15D | 1 | _ | | | | | | |
| 15 | Z502902000 | EMBELLECEDOR ADHES. LVC-21D | ADHES. TRIM LVC-21D | _ | 1 | | | | | | |
| 16 | R693056000 | PILOTO AMBAR 41227000A4 | AMBER PILOT 41227000A4 | 3 | 3 | | | | | | |
| 17 | Z203069000 | BOTON DE MANDO | CONTROL BUTTON | 2 | 2 | | | | | | |
| 18 | Z203070000 | PULSADOR NEGRO | BLACK BUTTON | 1 | 1 | | | | | | |
| 19 | R223005000 | RESISTENCIA TANQUE | TANK RESISTOR | 1 | 1 | | | | | | |
| 20 | Z603602000 | SOPORTE RESISTENCIATANQUE | TANK RESISTOR SUPPORT | 1 | 1 | | | | | | |
| | Q232040000 | ARANDELA A6 | WASHER A6 | 1 | 1 | | | | | | |
| | Q162040000 | TUERCA EXAGONAL M6 | HEXAGONAL NUT M6 | 1 | 1 | | | | | | |
| 21 | Z401713000 | CAPERUZA RESISTENC. CALDERIN | BOILER RESIST. CAP | 1 | 1 | | | | | | |
| | Q163140000 | TUERCA EXAGONAL M6 LATON | HEXAGONAL NUT M6 BRASS | 2 | 2 | | | | | | |
| | Q242030000 | ARANDELA ABANICO A5 A.304 | FAN WASHER A5 A.304 | 2 | 2 | | | | | | |
| | Q152004000 | TORNILLO APLASTADO M5x13 A304 | FLAT HEADED BOLT M5x13 A304 | 2 | 2 | | | | | | |
| 22 | Z401738000 | RESISTENCIA CALDERIN 2400W | BOILER RESISTOR 2400W | 1 | _ | | | | | | |
| 22 | Z421712000 | RESISTENCIA CALDERININ 2800W | BOILER RESISTOR 2800W | _ | 1 | | | | | | |
| | Q221301000 | TUERCA EXAG.AUTOBLOCANTE M6 | SELF-LOCK HEX NUT M6 | 2 | 2 | | | | | | |
| | Q163140000 | TUERCA EXAGONAL M6 LATON | HEXAGONAL NUT M6 BRASS | 5 | 5 | | | | | | |
| | Q262040000 | ARANDELA GROW. A6 A.304 | WASHER GROW. A6 A.304 | 5 | 5 | | | | | | |
| 23 | Q307053000 | JUNTA TORICA 43.82X54.48X5.35 | "O" RING 43.82X54.48X5.35 | 1 | 1 | | | | | | |
| 24 | Z393005000 | TERMOSTATO CALDERIN | WASH DRUM THERMOSTAT | 1 | 1 | | | | | | |
| | Q152024000 | TORNILLO AVELLANADO M4X8 A304 | COUNTERSUNK BOLT M4X8 A30 | 2 | 2 | | | | | | |
| 25 | N503017000 | SOPORTE TERMOSTATO 1001713 | THERMOSTAT SUPPORT 100171 | 1 | 1 | | | | | | |
| 26 | Z718405000 | TERMOSTATO DOBLE | DOUBLE THERMOSTAT | 1 | 1 | | | | | | |
| 27 | V817100000 | CONDENSADOR 6 M.F. | CONDENSER 6 M.F. | 1 | 1 | | | | | | |
| | | | | | | | | | | | |
| | | | | | | | | | | | |
| | | | | | | | | | | | |
| | | | | | | | | | | | |
| | | | | | | | | | | | |
| | | | | | | | | | | | |
| | | | | | | | | | | | |

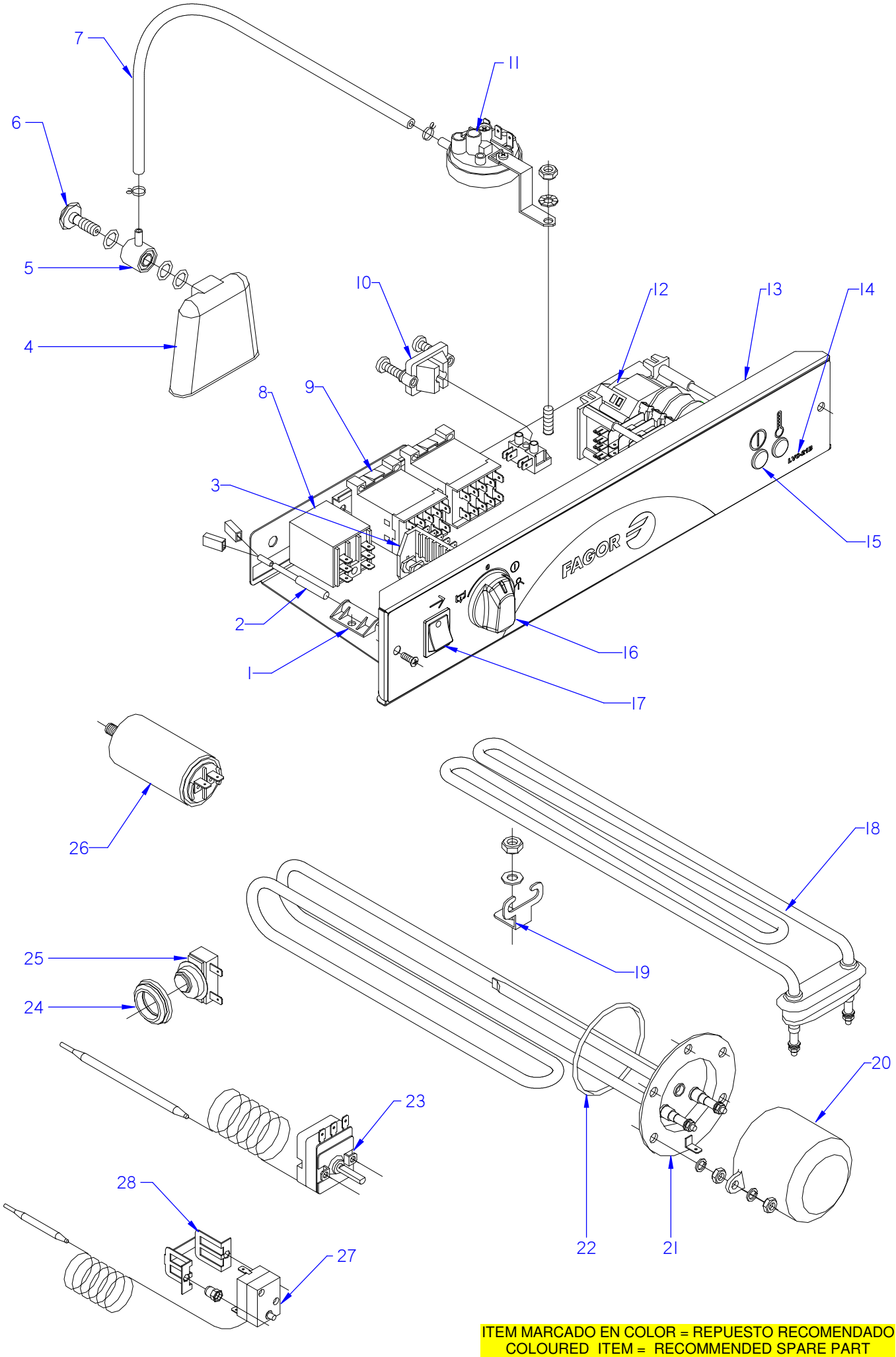


ITEM MARCADO EN COLOR = REPUESTO RECOMENDADO
COLOURED ITEM = RECOMMENDED SPARE PART

| N plano | Firma | Fecha | Aparato | | Lamina | |
|---|---|---|---|---|---|---|
| C-2120 | | 2009-10 | CONJUNTO FUNCIONAL ELECTRICO<br>LAVAVASOS LVC-21B | | 11 | Fagor Industrial S.Coop. FAGOR<br>Oñate |

| MOD. | LAVAVASOS | ZONA | CONJUNTO FUNCIONAL ELECTRICO | PLANO | C-2120 |
|---|---|---|---|---|---|

| ITEM | CODIGO | DENOMINACION | TEXTO | LVC-21B | | | | | | | NOTAS |
|---|---|---|---|---|---|---|---|---|---|---|---|
| 1 | Z203010000 | AMARRE INTERRUP. MAGNETICO | MAGNETIC SWITCH FASTENER | 1 | | | | | | | |
| 2 | Z203009000 | INTERRUPTOR MAGNETICO | MAGNETIC SWITCH | 1 | | | | | | | |
| 3 | Z433001000 | CONMUTADOR DE FUNCIONES | FUNCTIONS SWITCH | 1 | | | | | | | |
| 4 | Z203011000 | CAMARA PRESOSTATO | PRESSURE SWITCH | 1 | | | | | | | |
| 5 | Z203012000 | EMPALME PRESOSTATO | PRESSURE SWITCH CONNEX | 1 | | | | | | | |
| 6 | Z203013000 | TORNILLO PRESOSTATO | PRESSURE SWITCH BOLT | 1 | | | | | | | |
| | Q307003000 | JUNTA TORICA 16.01X10.77X2.62 | O-RING 16.01X10.77X2.62 | 3 | | | | | | | |
| 7 | 3702400000 | TUBO GOMA NEGRO D 8*4 | BLACK RUBBER PIPE Ø 8*4 | 1 | | | | | | | |
| | P102154000 | BRIDA ELASTICA TUBO | ELASTIC PIPE FLANGE | 2 | | | | | | | |
| 8 | Z203062000 | RELE 230V. 16A 50-60 HZ | RELAY 230V. 16A 50-60 HZ | 1 | | | | | | | ELIMINADO 15.10.2012 |
| 8 | Z203062000 | RELE 230V. 16A 50-60 HZ | RELAY 230V. 16A 50-60 HZ | 2 | | | | | | | INTRODUCIDO 15.10.2012 |
| 9 | Z203050000 | CONTACT. SIRIUS 3R 230 V.50-60 HZ | CONTACT. SIRIUS 3R 230 V.50/60 | 1 | | | | | | | |
| 9 | 12024011 | CONTACTOR 230 V. 50-60 HZ | CONTACTOR 230 V. 50-60 HZ | 1 | | | | | | | ELIMINADO 15.10.2012 |
| 9 | 12024011 | CONTACTOR 230 V. 50-60 HZ | CONTACTOR 230 V. 50-60 HZ | 2 | | | | | | | INTRODUCIDO 15.10.2012 |
| 10 | Z203020000 | RETENEDOR DE CABLE | CABLE HOLDER | 1 | | | | | | | |
| | Z603025000 | REGLETA DE CONEXIONES | CONNECTION STRIP | 1 | | | | | | | |
| | Q032021000 | TORNILLO ALOMADO M4X10 | CURVED SCREW M4X10 | 1 | | | | | | | |
| | Q162020000 | TUERCA EXAGONAL M4 | HEXAGONAL NUT M4 | 1 | | | | | | | |
| 11 | Z433011000 | PRESOSTATO DOBLE | DOUBLE PRESSURE SWITCH | 1 | | | | | | | |
| | Z602923000 | SOPORTE PRESOSTATO | PRESSURE SWITCH SUPPORT | 1 | | | | | | | |
| | Q082032000 | TORNILLO ALOMADO BZ-3,5X9,5 | CURVED SCREW BZ-3.5x9.5 | 1 | | | | | | | |
| | Q152004000 | TORNILLO APLASTADO M5x13 A304 | FLAT HEADED BOLT M5x13 A304 | 1 | | | | | | | |
| | Q242030000 | ARANDELA ABANICO A5 A.304 | FAN WASHER A5 A.304 | 1 | | | | | | | |
| | Q162030000 | TUERCA EXAGONAL M5 | HEXAGONAL NUT M5 | 1 | | | | | | | |
| 12 | Z433002000 | PROGRAMADOR CICLO 50Hz | CYCLE PROGRAMMER 50Hz | 1 | | | | | | | |
| 12 | Z448302000 | PROGRAMADOR CICLO 2´ 60Hz | CYCLE PROGRAMMER 2´ 60Hz | 1 | | | | | | | |
| | Z203007000 | CASQUILLO | BUSHING | 2 | | | | | | | |
| | Q041324000 | TORN. AVELLANADO M4X25 H.ZINC. | HEXAGONAL COUNTERSUNK M4 | 2 | | | | | | | |
| 13 | Z442905000 | FRENTE COMPLETO 21 | COMPLETE FRONT 21 | 1 | | | | | | | ELIMINADO 15.10.2012 |
| 13 | 12046877 | FRENTE COMPLETO FAGOR 21 | COMPLETE FRONT FAGOR 21 | 1 | | | | | | | INTRODUCIDO 15.10.2012 |
| | Q152004000 | TORNILLO APLASTADO M5x13 A304 | FLAT HEADED BOLT M5x13 A304 | 2 | | | | | | | |

| MOD. | LAVAVASOS | ZONA | CONJUNTO FUNCIONAL ELECTRICO | PLANO | C-2120 |
|---|---|---|---|---|---|

| ITEM | CODIGO | DENOMINACION | TEXTO | LVC-21B | | | | | | | NOTAS |
|---|---|---|---|---|---|---|---|---|---|---|---|
| 14 | Z452905000 | EMBELLECEDOR ADHES. LVC-21B | ADHES. TRIM LVC-21B | 1 | | | | | | | |
| 15 | R693056000 | PILOTO AMBAR 41227000A4 | AMBER PILOT 41227000A4 | 2 | | | | | | | |
| 16 | Z203069000 | BOTON DE MANDO | CONTROL BUTTON | 1 | | | | | | | |
| 17 | Z203080000 | PULSADOR MARCHA NEGRO | BLACK RUN BUTTON | 1 | | | | | | | |
| 18 | R223005000 | RESISTENCIA TANQUE | TANK RESISTOR | 1 | | | | | | | |
| 19 | Z603602000 | SOPORTE RESISTENCIATANQUE | TANK RESISTOR SUPPORT | 1 | | | | | | | |
| | Q232040000 | ARANDELA A6 | WASHER A6 | 1 | | | | | | | |
| | Q162040000 | TUERCA EXAGONAL M6 | HEXAGONAL NUT M6 | 1 | | | | | | | |
| 20 | Z401713000 | CAPERUZA RESISTENC. CALDERIN | BOILER RESIST. CAP | 1 | | | | | | | |
| | Q163140000 | TUERCA EXAGONAL M6 LATON | HEXAGONAL NUT M6 BRASS | 2 | | | | | | | |
| | Q242030000 | ARANDELA ABANICO A5 A.304 | FAN WASHER A5 A.304 | 2 | | | | | | | |
| | Q152004000 | TORNILLO APLASTADO M5x13 A304 | FLAT HEADED BOLT M5x13 A304 | 2 | | | | | | | |
| 21 | Z421712000 | RESISTENCIACALDERIN 2800W | BOILER RESISTOR 2800W | 1 | | | | | | | |
| | Q221301000 | TUERCA EXAG.AUTOBLOCANTE M6 | SELF-LOCK HEX NUT M6 | 2 | | | | | | | |
| | Q163140000 | TUERCA EXAGONAL M6 LATON | HEXAGONAL NUT M6 BRASS | 5 | | | | | | | |
| | Q262040000 | ARANDELA GROW. A6 A.304 | WASHER GROW. A6 A.304 | 5 | | | | | | | |
| 22 | Q307053000 | JUNTA TORICA 43.82X54.48X5.35 | "O" RING 43.82X54.48X5.35 | 1 | | | | | | | |
| 23 | Z393005000 | TERMOSTATO CALDERIN | WASH DRUM THERMOSTAT | 1 | | | | | | | |
| | Q152024000 | TORNILLO AVELLANADO M4X8 A304 | COUNTERSUNK BOLT M4X8 A304 | 2 | | | | | | | |
| 24 | N503017000 | SOPORTE TERMOSTATO 1001713 | THERMOSTAT SUPPORT 1001713 | 1 | | | | | | | |
| 25 | Z718405000 | TERMOSTATO DOBLE | DOUBLE THERMOSTAT | 1 | | | | | | | |
| 26 | V817100000 | CONDENSADOR 6 M.F. | CONDENSER 6 M.F. | 1 | | | | | | | |
| 27 | 12023830 | LIMITADOR TECASA P. | TECASA P. LIMITER | 1 | | | | | | | INTRODUCIDO 04.02.2013 |
| 28 | 12022151 | AMARRE LIMITADOR TECASA | LIMITER FASTENING | 1 | | | | | | | INTRODUCIDO 04.02.2013 |
| | | | | | | | | | | | |
| | | | | | | | | | | | |
| | | | | | | | | | | | |
| | | | | | | | | | | | |
| | | | | | | | | | | | |
| | | | | | | | | | | | |
| | | | | | | | | | | | |

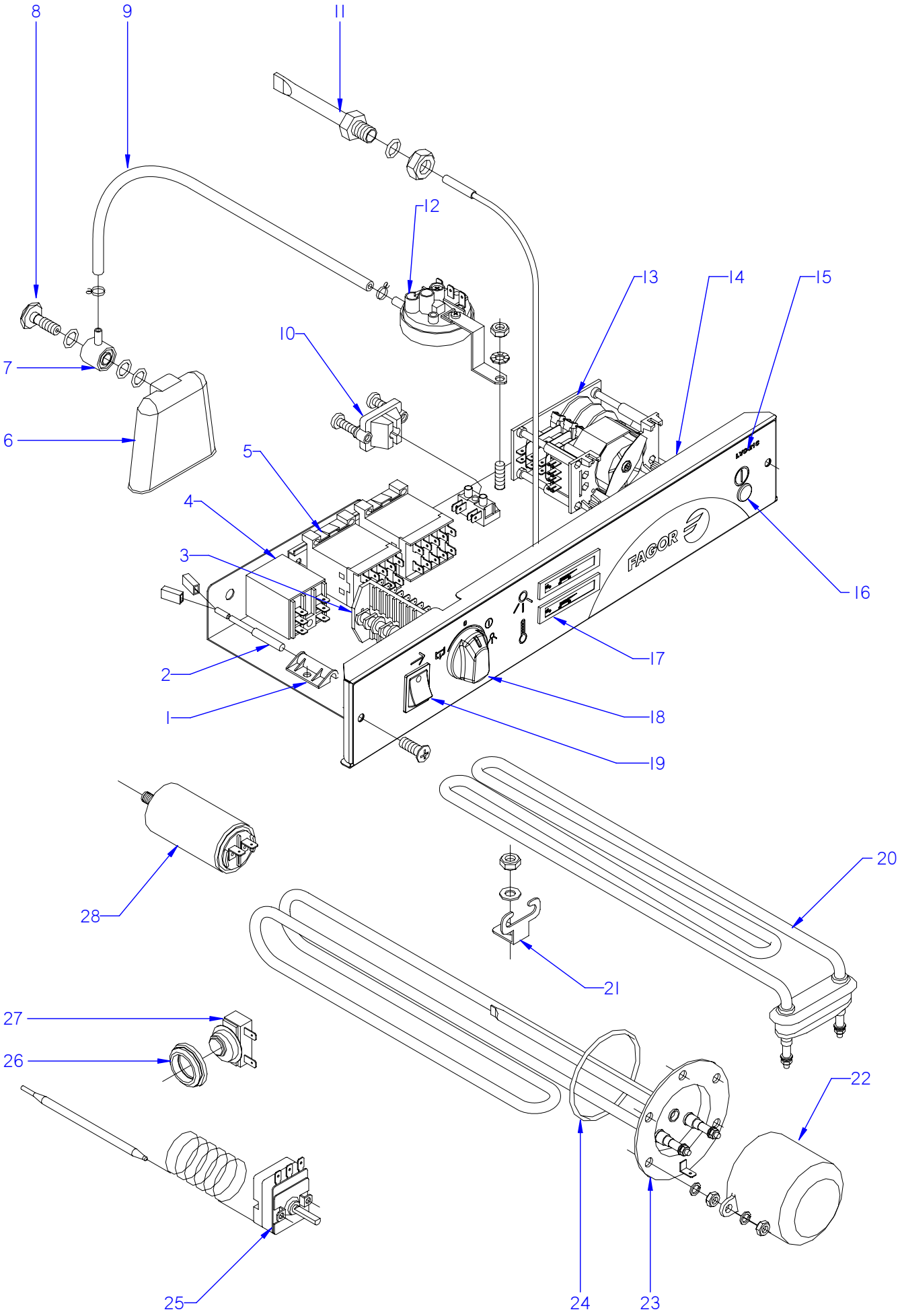


ITEM MARCADO EN COLOR = REPUESTO RECOMENDADO
COLOURED ITEM = RECOMMENDED SPARE PART

| N plano | Firma | Fecha | Aparato | CONJUNTO FUNCIONAL ELECTRICO | Lamina | |
|---|---|---|---|---|---|---|
| C-2121 | | 2009-10 | LAVAVASOS LVC-21C | | 12 | Fagor Industrial S.Coop. FAGOR Oñate |

| MOD. | LAVAVASOS | ZONA | CONJUNTO FUNCIONAL ELECTRICO | PLANO | C-2121 |
|---|---|---|---|---|---|

| ITEM | CODIGO | DENOMINACION | TEXTO | LVC-21C | | | | | | | NOTAS |
|---|---|---|---|---|---|---|---|---|---|---|---|
| 1 | Z203010000 | AMARRE INTERRUP. MAGNETICO | MAGNETIC SWITCH FASTENER | 1 | | | | | | | |
| 2 | Z203009000 | INTERRUPTOR MAGNETICO | MAGNETIC SWITCH | 1 | | | | | | | |
| 3 | Z433001000 | CONMUTADOR DE FUNCIONES | FUNCTIONS SWITCH | 1 | | | | | | | |
| 4 | Z203062000 | RELE 230V. 16A 50-60 HZ | RELAY 230V. 16A 50-60 HZ | 1 | | | | | | | |
| 5 | Z203050000 | CONTACT. SIRIUS 3R 230 V.50-60 HZ | CONTACT. SIRIUS 3R 230 V.50/60 | 1 | | | | | | | |
| 5 | Z213007000 | CONTACTOR 230 V. 50-60 HZ | CONTACTOR 230 V. 50-60 HZ | 1 | | | | | | | |
| 6 | Z203011000 | CAMARA PRESOSTATO | PRESSURE SWITCH | 1 | | | | | | | |
| 7 | Z203012000 | EMPALME PRESOSTATO | PRESSURE SWITCH CONNEX | 1 | | | | | | | |
| 8 | Z203013000 | TORNILLO PRESOSTATO | PRESSURE SWITCH BOLT | 1 | | | | | | | |
| | Q307003000 | JUNTA TORICA 16.01X10.77X2.62 | O-RING 16.01X10.77X2.62 | 3 | | | | | | | |
| 9 | 3702400000 | TUBO GOMA NEGRO D 8*4 | BLACK RUBBER PIPE Ø 8*4 | 1 | | | | | | | |
| | P102154000 | BRIDA ELASTICA TUBO | ELASTIC PIPE FLANGE | 2 | | | | | | | |
| 10 | Z203020000 | RETENEDOR DE CABLE | CABLE HOLDER | 1 | | | | | | | |
| | Z603025000 | REGLETA DE CONEXIONES | CONNECTION STRIP | 1 | | | | | | | |
| | Q032021000 | TORNILLO ALOMADO M4X10 | CURVED SCREW M4X10 | 1 | | | | | | | |
| | Q162020000 | TUERCA EXAGONAL M4 | HEXAGONAL NUT M4 | 1 | | | | | | | |
| 11 | Z263002000 | VAINA INDICADOR COMPLETA | COMPLETE INDICATOR SHELL | 1 | | | | | | | |
| | Q306024000 | JUNTA TORICA 18x12,5x1,5 | O-RING 18x12.5x1.5 | 1 | | | | | | | |
| | Q162070000 | TUERCA EXAGONAL M12 | HEXAGONAL NUT M12 | 1 | | | | | | | |
| 12 | Z433011000 | PRESOSTATO DOBLE | DOUBLE PRESSURE SWITCH | 1 | | | | | | | |
| | Z602923000 | SOPORTE PRESOSTATO | PRESSURE SWITCH SUPPORT | 1 | | | | | | | |
| | Q082032000 | TORNILLO ALOMADO BZ-3,5X9,5 | CURVED SCREW BZ-3.5x9.5 | 1 | | | | | | | |
| | Q152004000 | TORNILLO APLASTADO M5x13 A304 | FLAT HEADED BOLT M5x13 A304 | 1 | | | | | | | |
| | Q242030000 | ARANDELA ABANICO A5 A.304 | FAN WASHER A5 A.304 | 1 | | | | | | | |
| | Q162030000 | TUERCA EXAGONAL M5 | HEXAGONAL NUT M5 | 1 | | | | | | | |
| 13 | Z433002000 | PROGRAMADOR CICLO | CYCLE PROGRAMMER | 1 | | | | | | | |
| | Z203007000 | CASQUILLO | BUSHING | 2 | | | | | | | |
| | Q041324000 | TORN. AVELLANADO M4X25 H.ZINC. | HEXAGONAL COUNTERSUNK M4 | 2 | | | | | | | |
| 14 | Z442905000 | FRENTE COMPLETO 21 | COMPLETE FRONT 21 | 1 | | | | | | | |
| | Q152004000 | TORNILLO APLASTADO M5x13 A304 | FLAT HEADED BOLT M5x13 A304 | 2 | | | | | | | |
| 15 | Z208922000 | EMBELLECEDOR ADHES. LVC-21C | ADHES. TRIM LVC-21C | 1 | | | | | | | |

| MOD. | LAVAVASOS | ZONA | CONJUNTO FUNCIONAL ELECTRICO | PLANO | C-2121 |
|---|---|---|---|---|---|

| ITEM | CODIGO | DENOMINACION | TEXTO | LVC-21C | | | | | | | NOTAS |
|---|---|---|---|---|---|---|---|---|---|---|---|
| 16 | R693056000 | PILOTO AMBAR 41227000A4 | AMBER PILOT 41227000A4 | 1 | | | | | | | |
| 17 | Z203072000 | INDICADOR ANALOGICO | ANALOG INDICATOR | 2 | | | | | | | |
| 18 | Z203069000 | BOTON DE MANDO | CONTROL BUTTON | 1 | | | | | | | |
| 19 | Z203080000 | PULSADOR MARCHA NEGRO | BLACK RUN BUTTON | 1 | | | | | | | |
| 20 | R223005000 | RESISTENCIA TANQUE | TANK RESISTOR | 1 | | | | | | | |
| 21 | Z603602000 | SOPORTE RESISTENCIATANQUE | TANK RESISTOR SUPPORT | 1 | | | | | | | |
| | Q232040000 | ARANDELA A6 | WASHER A6 | 1 | | | | | | | |
| | Q162040000 | TUERCA EXAGONAL M6 | HEXAGONAL NUT M6 | 1 | | | | | | | |
| 22 | Z401713000 | CAPERUZA RESISTENC. CALDERIN | BOILER RESIST. CAP | 1 | | | | | | | |
| | Q163140000 | TUERCA EXAGONAL M6 LATON | HEXAGONAL NUT M6 BRASS | 2 | | | | | | | |
| | Q242030000 | ARANDELA ABANICO A5 A.304 | FAN WASHER A5 A.304 | 2 | | | | | | | |
| | Q152004000 | TORNILLO APLASTADO M5x13 A304 | FLAT HEADED BOLT M5x13 A304 | 2 | | | | | | | |
| 23 | Z421712000 | RESISTENCIACALDERIN 2800W | BOILER RESISTOR 2800W | 1 | | | | | | | |
| | Q221301000 | TUERCA EXAG.AUTOBLOCANTE M6 | SELF-LOCK HEX NUT M6 | 2 | | | | | | | |
| | Q163140000 | TUERCA EXAGONAL M6 LATON | HEXAGONAL NUT M6 BRASS | 5 | | | | | | | |
| | Q262040000 | ARANDELA GROW. A6 A.304 | WASHER GROW. A6 A.304 | 5 | | | | | | | |
| 24 | Q307053000 | JUNTA TORICA 43.82X54.48X5.35 | "O" RING 43.82X54.48X5.35 | 1 | | | | | | | |
| 25 | Z393005000 | TERMOSTATO CALDERIN | WASH DRUM THERMOSTAT | 1 | | | | | | | |
| | Q152024000 | TORNILLO AVELLANADO M4X8 A304 | COUNTERSUNK BOLT M4X8 A30 | 2 | | | | | | | |
| 26 | N503017000 | SOPORTE TERMOSTATO 1001713 | THERMOSTAT SUPPORT 100171 | 1 | | | | | | | |
| 27 | Z718405000 | TERMOSTATO DOBLE | DOUBLE THERMOSTAT | 1 | | | | | | | |
| 28 | V817100000 | CONDENSADOR 6 M.F. | CONDENSER 6 M.F. | 1 | | | | | | | |
| | | | | | | | | | | | |
| | | | | | | | | | | | |
| | | | | | | | | | | | |
| | | | | | | | | | | | |
| | | | | | | | | | | | |
| | | | | | | | | | | | |
| | | | | | | | | | | | |
| | | | | | | | | | | | |
| | | | | | | | | | | | |

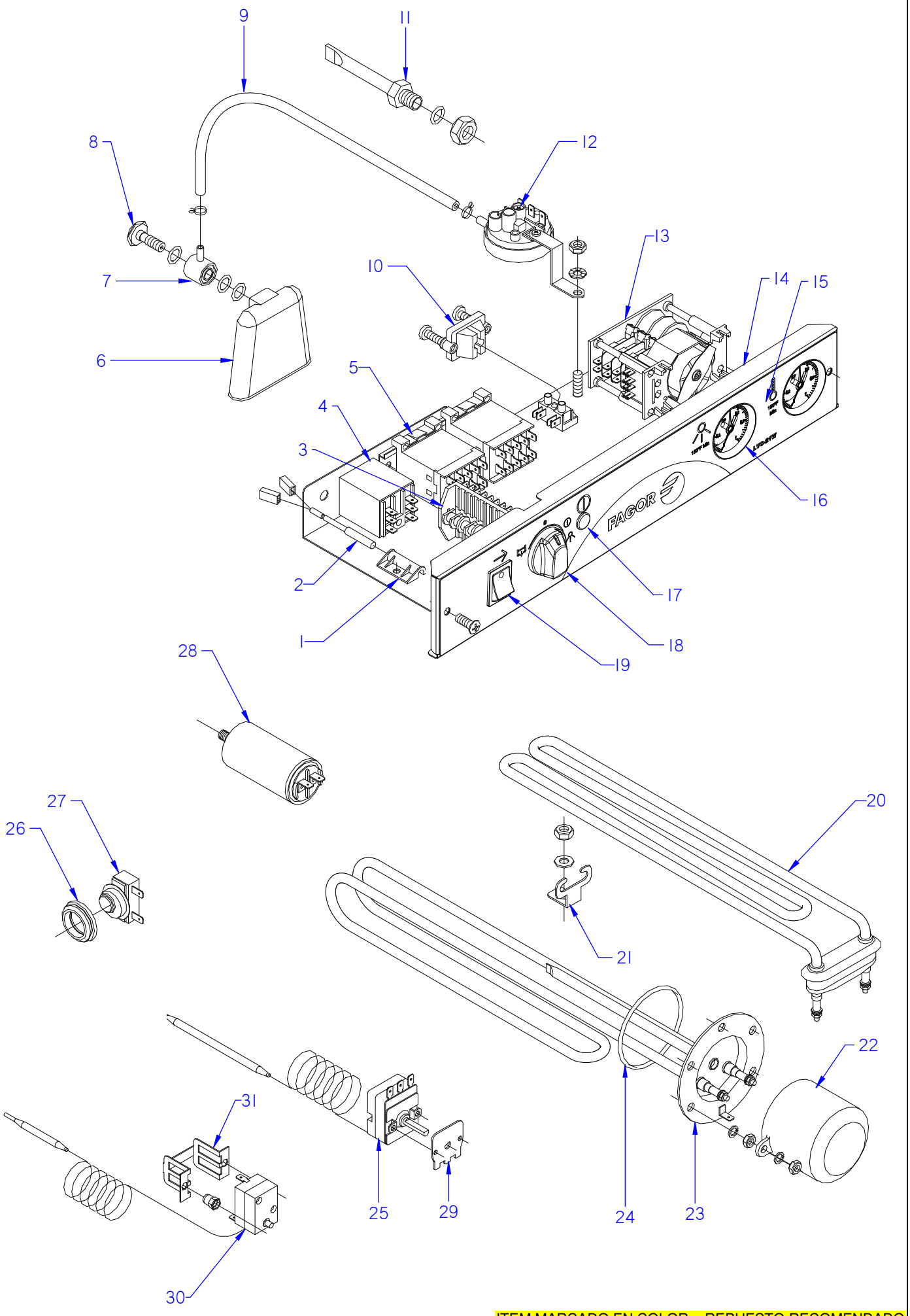


ITEM MARCADO EN COLOR = REPUESTO RECOMENDADO
COLOURED ITEM = RECOMMENDED SPARE PART

| N plano | Firma | Fecha | Aparato | | Lamina | |
|---|---|---|---|---|---|---|
| C-2122 | | 2009-10 | CONJUNTO FUNCIONAL ELECTRICO | LAVAVASOS LVC-21W | 13 | Fagor Industrial S.Coop. FAGOR Onate |

| MOD. | LAVAVASOS | ZONA | CONJUNTO FUNCIONAL ELECTRICO | PLANO | C-2122 |
|---|---|---|---|---|---|

| ITEM | CODIGO | DENOMINACION | TEXTO | LVC-21W | | | | | | | NOTAS |
|---|---|---|---|---|---|---|---|---|---|---|---|
| 1 | Z203010000 | AMARRE INTERRUP. MAGNETICO | MAGNETIC SWITCH FASTENER | 1 | | | | | | | |
| 2 | Z203009000 | INTERRUPTOR MAGNETICO | MAGNETIC SWITCH | 1 | | | | | | | |
| 3 | Z433001000 | CONMUTADOR DE FUNCIONES | FUNCTIONS SWITCH | 1 | | | | | | | |
| 4 | Z203062000 | RELE 230V. 16A 50-60 HZ | RELAY 230V. 16A 50-60 HZ | 1 | | | | | | | ELIMINADO 15.10.2012 |
| 4 | Z203062000 | RELE 230V. 16A 50-60 HZ | RELAY 230V. 16A 50-60 HZ | 2 | | | | | | | INTRODUCIDO 15.10.2012 |
| 5 | Z203050000 | CONTACT. SIRIUS 3R 230 V.50-60 HZ | CONTACT. SIRIUS 3R 230 V.50/60 | 1 | | | | | | | ELIMINADO 15.10.2012 |
| 5 | 12024011 | CONTACTOR 230 V. 50-60 HZ | CONTACTOR 230 V. 50-60 HZ | 1 | | | | | | | ELIMINADO 15.10.2012 |
| 5 | 12024011 | CONTACTOR 230 V. 50-60 HZ | CONTACTOR 230 V. 50-60 HZ | 2 | | | | | | | INTRODUCIDO 15.10.2012 |
| 6 | Z203011000 | CAMARA PRESOSTATO | PRESSURE SWITCH | 1 | | | | | | | |
| 7 | Z203012000 | EMPALME PRESOSTATO | PRESSURE SWITCH CONNEX | 1 | | | | | | | |
| 8 | Z203013000 | TORNILLO PRESOSTATO | PRESSURE SWITCH BOLT | 1 | | | | | | | |
| | Q307003000 | JUNTA TORICA 16.01X10.77X2.62 | O-RING 16.01X10.77X2.62 | 3 | | | | | | | |
| 9 | 3702400000 | TUBO GOMA NEGRO D 8*4 | BLACK RUBBER PIPE Ø 8*4 | 1 | | | | | | | |
| | P102154000 | BRIDA ELASTICA TUBO | ELASTIC PIPE FLANGE | 2 | | | | | | | |
| 10 | Z203020000 | RETENEDOR DE CABLE | CABLE HOLDER | 1 | | | | | | | |
| | U183046000 | REGLETA AUXILIAR | AUXILIARY STRIP | 1 | | | | | | | |
| | Q032021000 | TORNILLO ALOMADO M4X10 | CURVED SCREW M4X10 | 2 | | | | | | | |
| | Q162020000 | TUERCA EXAGONAL M4 | HEXAGONAL NUT M4 | 2 | | | | | | | |
| 11 | Z263002000 | VAINA INDICADOR COMPLETA | COMPLETE INDICATOR SHELL | 1 | | | | | | | |
| | Q306024000 | JUNTA TORICA 18x12,5x1,5 | O-RING 18x12.5x1.5 | 1 | | | | | | | |
| | Q162070000 | TUERCA EXAGONAL M12 | HEXAGONAL NUT M12 | 1 | | | | | | | |
| 12 | Z433011000 | PRESOSTATO DOBLE | DOUBLE PRESSURE SWITCH | 1 | | | | | | | |
| | Z602923000 | SOPORTE PRESOSTATO | PRESSURE SWITCH SUPPORT | 1 | | | | | | | |
| | Q082032000 | TORNILLO ALOMADO BZ-3,5X9,5 | CURVED SCREW BZ-3.5x9.5 | 1 | | | | | | | |
| | Q152004000 | TORNILLO APLASTADO M5x13 A304 | FLAT HEADED BOLT M5x13 A304 | 1 | | | | | | | |
| | Q162030000 | TUERCA EXAGONAL M5 | HEXAGONAL NUT M5 | 1 | | | | | | | |
| 13 | Z448302000 | PROGRAMADOR CICLO 2´ 60HZ | CYCLE PROGRAMMER 2´ 60HZ | 1 | | | | | | | |
| | Z203007000 | CASQUILLO | BUSHING | 2 | | | | | | | |
| | Q041324000 | TORN. AVELLANADO M4X25 H.ZINC/ | HEXAGONAL COUNTERSUNK M4 | 2 | | | | | | | |
| 14 | Z458407000 | FRENTE COMPLETO 21W | COMPLETE FRONT 21W | 1 | | | | | | | |
| | Q152004000 | TORNILLO APLASTADO M5x13 A304 | FLAT HEADED BOLT M5x13 A304 | 2 | | | | | | | |

| MOD. | LAVAVASOS | ZONA | CONJUNTO FUNCIONAL ELECTRICO | PLANO | C-2122 |
|---|---|---|---|---|---|

| ITEM | CODIGO | DENOMINACION | TEXTO | LVC-21W | | | | | | | NOTAS |
|---|---|---|---|---|---|---|---|---|---|---|---|
| 15 | Z458406000 | EMBELLECEDOR ADHE. LVC-21W | ADHES. TRIM LVC-21W | 1 | | | | | | | |
| 16 | Z273060000 | TERMOMETRO W NSF | THERMOMETER W NSF | 2 | | | | | | | |
| 17 | R693056000 | PILOTO AMBAR 41227000A4 | AMBER PILOT 41227000A4 | 1 | | | | | | | |
| 18 | Z203069000 | BOTON DE MANDO | CONTROL BUTTON | 1 | | | | | | | |
| 19 | Z203080000 | PULSADOR MARCHA NEGRO | BLACK RUN BUTTON | 1 | | | | | | | ELIMINADO 01.01.10 |
| 19 | Z513022000 | PULSADOR NEGRO | BLACK BUTTON | 1 | | | | | | | INTRODUCIDO 01.01.10 |
| 20 | R223005000 | RESISTENCIA TANQUE | TANK RESISTOR | 1 | | | | | | | |
| 21 | Z603602000 | SOPORTE RESISTENCIATANQUE | TANK RESISTOR SUPPORT | 1 | | | | | | | |
| | Q232040000 | ARANDELA A6 | WASHER A6 | 1 | | | | | | | |
| | Q162040000 | TUERCA EXAGONAL M6 | HEXAGONAL NUT M6 | 1 | | | | | | | |
| 22 | Z401713000 | CAPERUZA RESISTENC. CALDERIN | BOILER RESIST. CAP | 1 | | | | | | | |
| | Q163140000 | TUERCA EXAGONAL M6 LATON | HEXAGONAL NUT M6 BRASS | 2 | | | | | | | |
| | Q242030000 | ARANDELA ABANICO A5 A.304 | FAN WASHER A5 A.304 | 2 | | | | | | | |
| | Q152004000 | TORNILLO APLASTADO M5x13 A304 | FLAT HEADED BOLT M5x13 A304 | 2 | | | | | | | |
| 23 | Z421712000 | RESISTENCIACALDERIN 2800W | BOILER RESISTOR 2800W | 1 | | | | | | | |
| | Q221301000 | TUERCA EXAG.AUTOBLOCANTE M6 | SELF-LOCK HEX NUT M6 | 2 | | | | | | | |
| | Q163140000 | TUERCA EXAGONAL M6 LATON | HEXAGONAL NUT M6 BRASS | 5 | | | | | | | |
| | Q262040000 | ARANDELA GROW. A6 A.304 | WASHER GROW. A6 A.304 | 5 | | | | | | | |
| 24 | Q307053000 | JUNTA TORICA 43.82X54.48X5.35 | "O" RING 43.82X54.48X5.35 | 1 | | | | | | | |
| 25 | Z393005000 | TERMOSTATO CALDERIN | WASH DRUM THERMOSTAT | 1 | | | | | | | |
| | Q152024000 | TORNILLO AVELLANADO M4X8 A304 | COUNTERSUNK BOLT M4X8 A304 | 2 | | | | | | | |
| 26 | N503017000 | SOPORTE TERMOSTATO 1001713 | THERMOSTAT SUPPORT 1001713 | 1 | | | | | | | |
| 27 | Z718441000 | TERMOSTATO DOBLE W | DOUBLE THERMOSTAT W | 1 | | | | | | | |
| 28 | V817100000 | CONDENSADOR 6 M.F. | CONDENSER 6 M.F. | 1 | | | | | | | |
| 29 | 12021987 | CHAPA W 85ºC | W 85ºC PLATE | 1 | | | | | | | INTRODUCIDO 17.07.2012 |
| 30 | 12023830 | LIMITADOR TECASA P. | TECASA P. LIMITER | 1 | | | | | | | INTRODUCIDO 04.02.2013 |
| 31 | 12022151 | AMARRE LIMITADOR TECASA | LIMITER FASTENING | 1 | | | | | | | INTRODUCIDO 04.02.2013 |
| | | | | | | | | | | | |
| | | | | | | | | | | | |
| | | | | | | | | | | | |
| | | | | | | | | | | | |

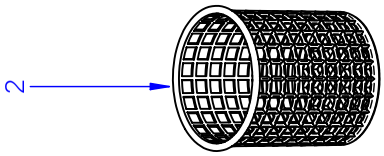


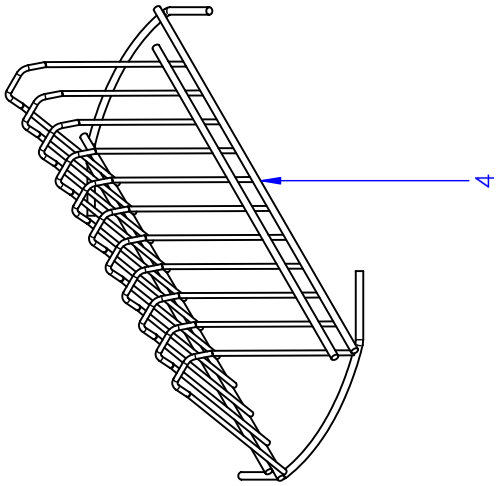


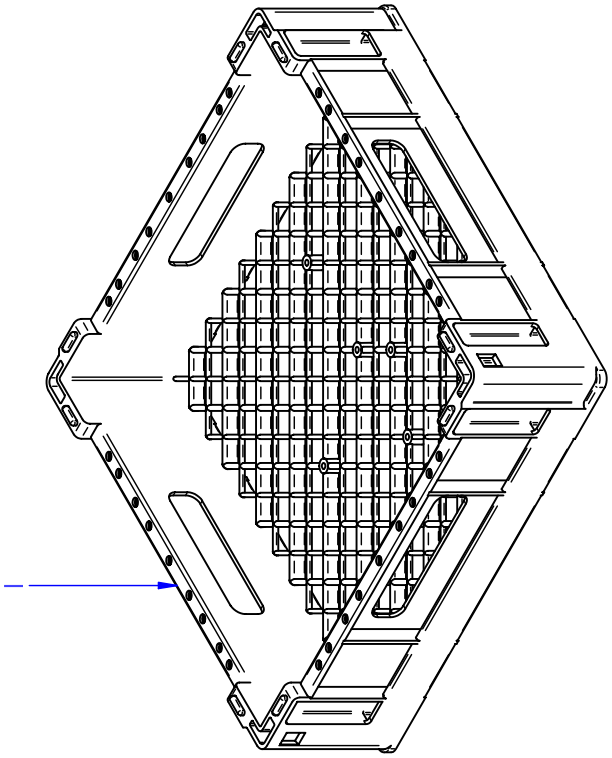


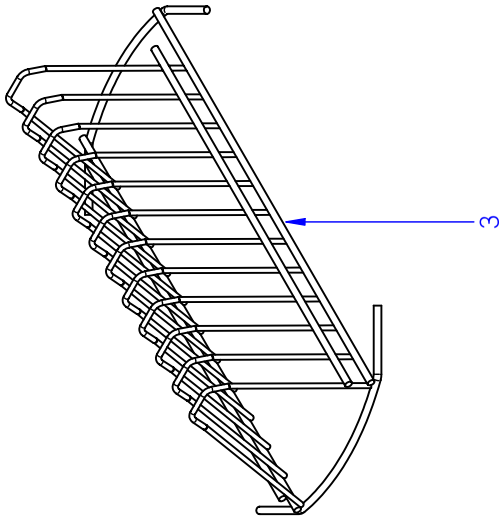


ITEM MARCADO EN COLOR = REPUESTO RECOMENDADO
COLOURED ITEM = RECOMMENDED SPARE PART

| N plano | Firma | Fecha | Aparato | | Lamina | |
|---|---|---|---|---|---|---|
| C-2123 | | 2009-10 | CESTILLOS | LAVAVASOS LVC | 14 | Fagor Industrial S.Coop. Oñate |

| MOD. | LAVAVASOS | ZONA | CESTILLOS | PLANO | C-2123 |
|---|---|---|---|---|---|

| ITEM | CODIGO | DENOMINACION | TEXTO | LVC-12 | LVC-15 | LVC-15D | LVC-21 | LVC-21D | LVC-21B | LVC-21C | LVC-21W | NOTAS |
|---|---|---|---|---|---|---|---|---|---|---|---|---|
| 1 | Z415320000 | CESTILLO LVC-12/15 | BASKET LVC-12/15 | 2 | 2 | 2 | _ | _ | _ | _ | _ | |
| 1 | Z445320000 | CESTILLO LVC-21 | BASKET LVC-21 | _ | _ | _ | 2 | 2 | 2 | 2 | 2 | |
| 2 | Z605303000 | CESTILLO CUBIERTOS | CUTLERY BASKET | 1 | 1 | 1 | 1 | 1 | 1 | 1 | 1 | |
| 3 | Z605302000 | SUPLEMENT. CESTILLOS LAVA.-12 | SUPPLEMENT. WASH BASKET.-1 | 1 | _ | _ | _ | _ | _ | _ | _ | INTRODUC.30.11.12 |
| 3 | Z605302000 | SUPLEMENT. CESTILLOS LAVA.-12 | SUPPLEMENT. WASH BASKET.-1 | _ | 1 | 1 | _ | _ | _ | _ | _ | |
| 4 | Z625302000 | SUPLEMENT. PLATILLOS LAVAV.18 | SUPPLEMENT. GLASS WASHER | _ | _ | _ | 1 | 1 | 1 | 1 | 1 | |

| MOD. | LAVAVASOS | ZONA | VARIOS | PLANO | |
|---|---|---|---|---|---|

| ITEM | CODIGO | DENOMINACION | TEXTO | LVC-12 | LVC-15 | LVC-15D | LVC-21 | LVC-21D | LVC-21B | LVC-21C | LVC-21W | NOTAS |
|---|---|---|---|---|---|---|---|---|---|---|---|---|
| | Z406132000 | FOLLETO INSTRUCCIONES | INSTRUCTION LEAFLET. | 1 | 1 | 1 | 1 | 1 | 1 | 1 | _ | |
| | Z408432000 | FOLLETO INSTRUCCIONES | INSTRUCTION LEAFLET. | _ | _ | _ | _ | _ | _ | _ | 1 | |
| | Z393010000 | ESQUEMA TEORICO ADH. LVC-12 | THEORETICAL. DIAGRAM ADHE. | 1 | _ | _ | _ | _ | _ | _ | _ | ELIMINA. 15.10.12 |
| | Z403014000 | ESQUEMA TEORICO ADH. LVC-15 | THEORETICAL DIAGRAM ADHE. | 1 | _ | _ | _ | _ | _ | _ | _ | INTRODU. 15.10.12 |
| | Z403014000 | ESQUEMA TEORICO ADH. LVC-15 | THEORETICAL DIAGRAM ADHE. | _ | 1 | _ | 1 | _ | _ | _ | _ | PLANO HC-16496 |
| | Z473002000 | ESQUEMA TEORICO AD. LVC-15D | THEORETICAL DIAGRAM ADHE. | _ | _ | 1 | _ | 1 | _ | _ | _ | PLANO HC-16531 |
| | Z433009000 | ESQUEMA TEORICO AD. LVC-21B | THEORETICAL DIAGRAM ADHE. | _ | _ | _ | _ | _ | 1 | 1 | _ | PLANO HC-17195 |
| | Z438402000 | ESQUEMA TEORICO AD. LVC-21W | THEORETICAL DIAGRAM ADHE. | _ | _ | _ | _ | _ | _ | | 1 | PLANO HC-17117 |
| | Z393035000 | ESQUEMA MONTAJE LVC-12 | ASSEMBLY DIAGRAM LVC-12 | 1 | _ | _ | _ | _ | _ | _ | _ | ELIMINA. 15.10.12 |
| | Z403035000 | ESQUEMA MONTAJE LVC-15 | ASSEMBLY DIAGRAM LVC-15 | _ | 1 | _ | 1 | _ | _ | _ | _ | ELIMINA. 15.10.12 |
| | Z473035000 | ESQUEMA MONTAJE LVC-15D | ASSEMBLY DIAGRAM LVC-15D | _ | _ | 1 | _ | 1 | _ | _ | _ | PLANO HC-16530 |
| | 12046369 | ESQUE. MONTAJE LVC, 21, 15, 12 | ASSEMBLY DIA. LVC, 21, 15, 12 | 1 | 1 | _ | 1 | _ | _ | _ | _ | INTRODU. 15.10.12 |
| | Z433035000 | ESQUEMA MONTAJE LVC-21B | ASSEMBLY DIAGRAM LVC-21B | _ | _ | _ | _ | _ | 1 | 1 | _ | ELIMINA. 15.10.12 |
| | 12046409 | ESQUEMA MONTAJE LVC-21B | ASSEMBLY DIAGRAM LVC-21B | _ | _ | _ | _ | _ | 1 | 1 | _ | INTRODU. 15.10.12 |
| | Z433036000 | ESQUEMA MONTAJE LVC-21W | ASSEMBLY DIAGRAM LVC-21W | _ | _ | _ | _ | _ | _ | _ | 1 | PLANO HC-18001 |
| | Z393001000 | INSTALACION ELECTRICA | ELECTRIC INSTALLATION | 1 | _ | _ | _ | _ | _ | _ | _ | ELIMINA. 15.10.12 |
| | Z403011000 | INSTALACION ELECTRICA | ELECTRIC INSTALLATION | _ | 1 | 1 | 1 | 1 | 1 | 1 | 1 | ELIMINA. 15.10.12 |
| | 12046167 | INSTALA. ELECTRICA LVC 21,15 | ELECTRIC INSTALL. LVC 21,15 | 1 | 1 | 1 | 1 | 1 | _ | _ | _ | INTRODU. 15.10.12 |
| | 12046168 | INSTALA. ELECTRICA LVC 21,15B | ELECTRIC INSTALL. LVC 21,15B | _ | _ | _ | _ | _ | 1 | _ | 1 | INTRODU. 15.10.12 |
| | 12023746 | CABLE ALIMENTACION | SUPPLY CABLE | 1 | 1 | 1 | 1 | 1 | 1 | 1 | _ | |
| | 12023974 | CABLE DE ALIMENTACION USA | POWER CABLE USA | _ | _ | _ | _ | _ | _ | _ | 1 | |
| | 12025003 | CABLEADO BOMBA DESAGÜE | DRAINAGE PUMP WIRING | _ | _ | _ | _ | _ | 1 | 1 | 1 | ELIMINA. 15.10.12 |
| | 12024183 | CABLEADO TIERRA M.BOMBA | PUMP LAND WIRING | 1 | 1 | 1 | 1 | 1 | 1 | 1 | 1 | INTRODU. 10.10.12 |
| S/Nº | 12024314 | CABLEADO DOSIFICADOR DTGTE. | DETERGENT DISP. WIRING | _ | _ | _ | _ | _ | _ | 1 | 1 | |
| | | | | | | | | | | | | |
| | | | | | | | | | | | | |
| | | | | | | | | | | | | |
| | | | | | | | | | | | | |
| | | | | | | | | | | | | |
| | | | | | | | | | | | | |
| | | | | | | | | | | | | |

| MOD. | LAVAVASOS | ZONA | PIEZAS ESPECIFICAS PARA LA VERSION UK | PLANO | |
|---|---|---|---|---|---|

| ITEM | CODIGO | DENOMINACION | TEXTO | LVC-21B AR UK | | | | | | | NOTAS |
|---|---|---|---|---|---|---|---|---|---|---|---|
| | Z208912000 | RESIST. CALDERIN COMP. 2200W | COMP. BOILER RESIST. 2200W | 1 | | | | | | | |
| | Z468901000 | CABLE DE ALIMENTACION UK | POWER CABLE UK | 1 | | | | | | | |

| MOD. | LAVAVASOS | ZONA | PIEZAS ESPECIFICAS PARA LA VERSION AZKOYEN | PLANO | |
|---|---|---|---|---|---|

| ITEM | CODIGO | DENOMINACION | TEXTO | A-9 (LVC-12) | A-15 (LVC-15) | A-21 (LVC-21) | A-21B (LVC-21B) | | | | NOTAS |
|---|---|---|---|---|---|---|---|---|---|---|---|
| | Z658602000 | ASA PUERTA GRIS RAL 7039 | DOOR HANDLE GREY RAL 7039 | 1 | 1 | 1 | 1 | | | | |
| | Z230902000 | PASAMUROS DETERGENTE | DETERGENT WALL BUSHING | 1 | 1 | 1 | 1 | | | | |
| | Z448614000 | CONDUCTO ASPIRAC. AZKOYEN | EXTRACTOR PIPE. AZKOYEN | 1 | 1 | 1 | 1 | | | | |
| | Z448616000 | PEGATINA TOMA DETERGENTE | DETERGENT INTAKE LABEL | 1 | 1 | 1 | 1 | | | | |
| | Z468601000 | EMBELLECEDOR ADHESIVO A-9 | ADHESIVE TRIM A-9 | 1 | _ | _ | _ | | | | |
| | Z418601000 | EMBELLECEDOR ADHESIVO A-15 | ADHESIVE TRIM A-15 | _ | 1 | _ | _ | | | | |
| | Z448601000 | EMBELLECEDOR ADHESIVO A-21 | ADHESIVE TRIM A-21 | _ | _ | 1 | _ | | | | |
| | Z458601000 | EMBELLECEDOR ADHESIVO A-21B | ADHESIVE TRIM A-21B | _ | _ | _ | 1 | | | | |
| | Z402907000 | FRENTE EXTRAIBLE A-9 | REMOVABLE FRONT A-9 | 1 | _ | _ | _ | | | | |
| | Z418602000 | FRENTE EXTRAIBLE A-15 | REMOVABLE FRONT A-15 | _ | 1 | _ | _ | | | | |
| | Z448612000 | FRENTE EXTRAIBLE A-21 | REMOVABLE FRONT A-21 | _ | _ | 1 | _ | | | | |
| | Z432903000 | FRENTE EXTRAIBLE 20B-21B | REMOVABLE FRONT 20B-21B | _ | _ | _ | 1 | | | | |
| | Z658813000 | BOTON DE MANDO | CONTROL BUTTON | 1 | 1 | 1 | 1 | | | | |
| | Z658607000 | INDICADOR | INDICATOR | 1 | 1 | 1 | 1 | | | | |
| | Z203033000 | INTERRUPTOR GENERAL | POWER SWITCH | 1 | 1 | 1 | _ | | | | |
| | Z410311000 | CAJA SOLDADA AZKOYEN 12-15 | WELDED BOX AZKOYEN 12-15 | 1 | 1 | _ | _ | | | | |
| | Z440311000 | CAJA SOLDADA AZKOYEN 21 | WELDED BOX AZKOYEN 21 | _ | _ | 1 | _ | | | | |
| | Z458811000 | CAJA SOLDADA AZKOYEN 21B | WELDED BOX AZKOYEN 21B | _ | _ | _ | 1 | | | | |
| | Z448613000 | CABLE DOSIFICADOR AZKOYEN | DISP. CABLE AZKOYEN | 1 | 1 | 1 | 1 | | | | |
| | R693055000 | PILOTO VERDE 41227000C7 | GREEN PILOT 41227000C7 | _ | 1 | 1 | 1 | | | | |
| | Z403033000 | PULSADOR ACLARADO | RINSE BUTTON | _ | 1 | 1 | _ | | | | |
| | Z213033000 | PULSADOR MARCHA | START BUTTON | _ | _ | _ | 1 | | | | |
| | Z213007000 | CONTACTOR 230 V. 50-60 HZ | CONTACTOR 230 V. 50-60 HZ | _ | 1 | 2 | _ | | | | |
| | Z468631000 | FOLLETO DE INSTRUCCIONES | INSTRUCTION LEAFLET | 1 | 1 | 1 | 1 | | | | |
| | | | | | | | | | | | |
| | | | | | | | | | | | |
| | | | | | | | | | | | |
| | | | | | | | | | | | |
| | | | | | | | | | | | |
| | | | | | | | | | | | |
| | | | | | | | | | | | |

| MOD. | LAVAVASOS | ZONA | PIEZAS ESPECIFICAS PARA LA VERSION ASPES | PLANO | |
|---|---|---|---|---|---|

| ITEM | CODIGO | DENOMINACION | TEXTO | LAB-1200 C (LVC-12) | LAB-1500 C (LVC-15) | LAB-2100 C (LVC-21) | | | | | NOTAS |
|---|---|---|---|---|---|---|---|---|---|---|---|
| | Z448720000 | ARMAZON COMPLETO | COMPLETE FRAME | _ | _ | 1 | | | | | |
| | Z468736000 | ESCUADRA AMARRE TAPA ASPES | ATTACHMENT BRACKET COVER | 2 | 2 | _ | | | | | |
| | Z448736000 | ESCUADRA AMARRE TAPA ASPES | ATTACHMENT BRACKET COVER | 2 | 2 | 2 | | | | | |
| | Z468740000 | PUERTA COMPLETA | COMPLETE DOOR | 1 | 1 | _ | | | | | |
| | Z448740000 | PUERTA COMPLETA | COMPLETE DOOR | _ | _ | 1 | | | | | |
| | Z468711000 | PASAMUROS CESTO CUADRADO | SQUARE BASKET WALL BUSHIN | 1 | _ | _ | | | | | |
| | Z468710000 | SOPORTE ACLARADO SUPERIOR | UPPER RINSE SUPPORT | 1 | _ | _ | | | | | |
| | Z201903000 | SOPORTE RAMAS ACLARADO | RINSE BRANCH SUPPORT | 1 | _ | _ | | | | | |
| | Z468713000 | RAMA ACLARADO A ASPES | RINSE BRANCH A ASPES | 1 | _ | _ | | | | | |
| | Z468712000 | RAMA ACLARADO B ASPES | RINSE BRANCH B ASPES | 1 | _ | _ | | | | | |
| | Z448713000 | RAMA ACLARADO A ASPES | RINSE BRANCH A ASPES | _ | _ | 1 | | | | | |
| | Z448712000 | RAMA ACLARADO B ASPES | RINSE BRANCH B ASPES | _ | _ | 1 | | | | | |
| | Z201905000 | TOBERA ACLARADO | RINSE NOZZLE | _ | _ | 10 | | | | | |
| | Z201906000 | ENGANCHE TOB. ACLA.19728 | NOZZLE LATCH RINSE.19728 | _ | _ | 10 | | | | | |
| | Z468765000 | ADHESIVO ASPES LAB-1200 C | ADHESIVE ASPES LAB-1200 C | 1 | _ | _ | | | | | |
| | Z418765000 | ADHESIVO ASPES LAB-1500 C | ADHESIVE ASPES LAB-1500 C | _ | 1 | _ | | | | | |
| | Z448765000 | ADHESIVO ASPES LAB-2100 C | ADHESIVE ASPES LAB-2100 C | _ | _ | 1 | | | | | |
| | Z468734000 | FRENTE EXTRAIBLE ASPES | REMOVABLE FRONT ASPES | 1 | 1 | _ | | | | | |
| | Z448734000 | FRENTE EXTRAIBLE ASPES | REMOVABLE FRONT ASPES | _ | _ | 1 | | | | | |
| | Z448737000 | PANEL POSTERIOR ASPES | REAR PANEL ASPES | _ | _ | 1 | | | | | |
| | Z214902000 | BOTON DE MANDO COMPLETO | COMPLETE CONTROL BUTTON | 1 | 1 | 1 | | | | | |
| | Z203033000 | INTERRUPTOR GENERAL | POWER SWITCH | 1 | 1 | 1 | | | | | |
| | Z203062000 | RELE 230V. 16A 50-60 HZ | RELAY 230V. 16A 50-60 HZ | 1 | _ | _ | | | | | |
| | R693055000 | PILOTO VERDE 41227000C7 | GREEN PILOT 41227000C7 | _ | 1 | 1 | | | | | |
| | Z403033000 | PULSADOR ACLARADO | RINSE BUTTON | _ | 1 | 1 | | | | | |
| | | | | | | | | | | | |
| | | | | | | | | | | | |
| | | | | | | | | | | | |
| | | | | | | | | | | | |
| | | | | | | | | | | | |
| | | | | | | | | | | | |

| MOD. | LAVAVASOS | ZONA | PIEZAS ESPECIFICAS PARA LA VERSION MOVILFRIT | PLANO | |
|---|---|---|---|---|---|

| ITEM | CODIGO | DENOMINACION | TEXTO | MLV-35 (LVC-12) | MLV-35 S (LVC-15) | MLV-35 D (LVC-15D) | MLV-40 (LVC-21) | MLV-40-D (LVC-21D) | MLV-40-B (LVC-21B) | | NOTAS |
|---|---|---|---|---|---|---|---|---|---|---|---|
| | Z468740000 | PUERTA COMPLETA | COMPLETE DOOR | 1 | 1 | 1 | _ | _ | _ | | ELIMINADO 30.04.10 |
| | Z468004000 | PUERTA COMPLETA EDESA | COMPLETE DOOR EDESA | 1 | 1 | 1 | _ | _ | _ | | INTRODUCIDO 30.04.10 |
| | Z464602000 | ASA CHAPA LVS | HANDLE LVS | 1 | 1 | 1 | 1 | 1 | 1 | | INTRODUCIDO 30.04.10 |
| | Z448740000 | PUERTA COMPLETA | COMPLETE DOOR | _ | _ | _ | 1 | 1 | 1 | | ELIMINADO 30.04.10 |
| | Z448003000 | PUERTA COMPLETA EDESA | COMPLETE DOOR EDESA | _ | _ | _ | 1 | 1 | 1 | | INTRODUCIDO 30.04.10 |
| | Z464401000 | EMBELLECE. ADHESIVO MLV-35 | ADHESIVE TRIM MLV-35. | 1 | _ | _ | _ | 1 | 1 | | |
| | Z414401000 | EMBELLECE. ADHESIVO MLV-35 S | ADHESIVE TRIM MLV-35S. | _ | 1 | _ | _ | _ | _ | | |
| | Z484401000 | EMBELLECE. ADHESIVO MLV-35-D | ADHESIVE TRIM MLV-35-D. | _ | _ | 1 | _ | _ | _ | | |
| | Z444401000 | EMBELLECE. ADHESIVO MLV-40 | ADHESIVE TRIM MLV-40. | _ | _ | _ | 1 | _ | _ | | |
| | Z504401000 | EMBELLECE. ADHESIVO MLV-40-D | ADHESIVE TRIM MLV-40-D. | _ | _ | _ | _ | 1 | _ | | |
| | Z454401000 | EMBELLECE. ADHESIVO MLV-40-B | ADHESIVE TRIM MLV-40-B. | _ | _ | _ | _ | _ | 1 | | |
| | Z402907000 | FRENTE EXTRAIBLE | REMOVABLE FRONT | 1 | 1 | _ | _ | _ | _ | | |
| | Z472901000 | FRENTE EXTRAIBLE | REMOVABLE FRONT | _ | _ | 1 | _ | _ | _ | | |
| | Z422907000 | FRENTE EXTRAIBLE | REMOVABLE FRONT | _ | _ | _ | 1 | _ | _ | | |
| | Z492901000 | FRENTE EXTRAIBLE | REMOVABLE FRONT | _ | _ | _ | _ | 1 | _ | | |
| | Z432903000 | FRENTE EXTRAIBLE | REMOVABLE FRONT | _ | _ | _ | _ | _ | 1 | | |
| | Z663062000 | BOTON DE MANDO | CONTROL BUTTON | 1 | 1 | 2 | 1 | 2 | 1 | | |
| | Z203033000 | INTERRUPTOR GENERAL | POWER SWITCH | 1 | 1 | _ | 1 | _ | _ | | |
| | R693055000 | PILOTO VERDE 41227000C7 | GREEN PILOT 41227000C7 | _ | 1 | 1 | 1 | 1 | 1 | | |
| | Z403033000 | PULSADOR ACLARADO | RINSE BUTTON | _ | 1 | 1 | 1 | 1 | _ | | |
| | Z213033000 | PULSADOR MARCHA | START BUTTON | _ | _ | _ | _ | _ | 1 | | |
| | | | | | | | | | | | |
| | | | | | | | | | | | |
| | | | | | | | | | | | |
| | | | | | | | | | | | |
| | | | | | | | | | | | |
| | | | | | | | | | | | |
| | | | | | | | | | | | |
| | | | | | | | | | | | |
| | | | | | | | | | | | |

| MOD. | LAVAVASOS | ZONA | PIEZAS ESPECIFICAS PARA LA VERSION CELIKAY | PLANO | |
|---|---|---|---|---|---|

| ITEM | CODIGO | DENOMINACION | TEXTO | CBY-1200 (LVC-12) | | | | | | | NOTAS |
|---|---|---|---|---|---|---|---|---|---|---|---|
| | Z468736000 | ESCUADRA AMARRE TAPA | COVER FASTENING BRACKET | 2 | | | | | | | |
| | Z468740000 | PUERTA COMPLETA | COMPLETE DOOR | 1 | | | | | | | |
| | Z468711000 | PASAMUROS CESTO CUADRADO | SQUARE BASKET WALL BUSHIN | 1 | | | | | | | |
| | Z468710000 | SOPORTE ACLARADO SUPERIOR | UPPER RINSE SUPPORT | 1 | | | | | | | |
| | Z201903000 | SOPORTE RAMAS ACLARADO | RINSE BRANCH SUPPORT | 1 | | | | | | | |
| | Z468713000 | RAMA ACLARADO A ASPES | RINSE BRANCH A ASPES | 1 | | | | | | | |
| | Z468712000 | RAMA ACLARADO B ASPES | RINSE BRANCH B ASPES | 1 | | | | | | | |
| | Z468203000 | EMBELLEC. ADHESIVO CELIKAY | ADHESIVE TRIM CELIKAY. | 1 | | | | | | | |
| | Z468734000 | FRENTE EXTRAIBLE | REMOVABLE FRONT | 1 | | | | | | | |
| | R663062000 | BOTON DE MANDO | CONTROL BUTTON | 1 | | | | | | | |
| | Z203033000 | INTERRUPTOR GENERAL | POWER SWITCH | 1 | | | | | | | |
| | Z203062000 | RELE 230V. 16A 50-60 HZ | RELAY 230V. 16A 50-60 HZ | 1 | | | | | | | |
| | | | | | | | | | | | |
| | | | | | | | | | | | |
| | | | | | | | | | | | |
| | | | | | | | | | | | |
| | | | | | | | | | | | |
| | | | | | | | | | | | |
| | | | | | | | | | | | |
| | | | | | | | | | | | |
| | | | | | | | | | | | |
| | | | | | | | | | | | |
| | | | | | | | | | | | |
| | | | | | | | | | | | |
| | | | | | | | | | | | |
| | | | | | | | | | | | |
| | | | | | | | | | | | |
| | | | | | | | | | | | |
| | | | | | | | | | | | |
| | | | | | | | | | | | |
| | | | | | | | | | | | |

| MOD. | LAVAVASOS | ZONA | PIEZAS ESPECIFICAS PARA LA VERSION DIVA | PLANO | |
|---|---|---|---|---|---|

| ITEM | CODIGO | DENOMINACION | TEXTO | DBY-1000 (LVC-12) | | | | | | | NOTAS |
|---|---|---|---|---|---|---|---|---|---|---|---|
| | Z468736000 | ESCUADRA AMARRE TAPA | COVER FASTENING BRACKET | 2 | | | | | | | |
| | Z650531000 | ASA PUERTA NEGRA | BLACK DOOR HANDLE | 1 | | | | | | | ELIMINADO 05.06.09 |
| | Z400545000 | ASA NEGRA | BLACK HANDLE | 1 | | | | | | | INTRODUCIDO 05.06.09 |
| | Z468711000 | PASAMUROS CESTO CUADRADO | SQUARE BASKET WALL BUSHIN | 1 | | | | | | | |
| | Z468710000 | SOPORTE ACLARADO SUPERIOR | UPPER RINSE SUPPORT | 1 | | | | | | | |
| | Z201903000 | SOPORTE RAMAS ACLARADO | RINSE BRANCH SUPPORT | 1 | | | | | | | |
| | Z468713000 | RAMA ACLARADO A ASPES | RINSE BRANCH A ASPES | 1 | | | | | | | |
| | Z468712000 | RAMA ACLARADO B ASPES | RINSE BRANCH B ASPES | 1 | | | | | | | |
| | Z468202000 | EMBELLECEDOR ADHESIVO DIVA | ADHESIVE TRIM DIVA | 1 | | | | | | | |
| | Z468734000 | FRENTE EXTRAIBLE | REMOVABLE FRONT | 1 | | | | | | | |
| | Z214902000 | BOTON DE MANDO | CONTROL BUTTON | 1 | | | | | | | |
| | Z203033000 | INTERRUPTOR GENERAL | POWER SWITCH | 1 | | | | | | | |
| | Z203062000 | RELE 230V. 16A 50-60 HZ | RELAY 230V. 16A 50-60 HZ | 1 | | | | | | | |

| MOD. | LAVAVASOS | ZONA | PIEZAS ESPECIFICAS PARA LA VERSION CORECO | PLANO | |
|---|---|---|---|---|---|

| ITEM | CODIGO | DENOMINACION | TEXTO | CLV-12 (LVC-12) | CLV-15 (LVC-15) | CLV-15 CD (LVC-15D ) | CLV-21 C (LVC-21 ) | CLV-21 CD (LVC-21D ) | | | |
|---|---|---|---|---|---|---|---|---|---|---|---|
| | Z464602000 | ASA CHAPA LVS | PLATE HANDLE LVS | 1 | 1 | 1 | 1 | 1 | | | |
| | Z468101000 | EMBELLECEDOR ADHESIV. CLV-12 | ADHESIVE TRIM CLV-12 | 1 | _ | _ | _ | _ | | | |
| | Z418101000 | EMBELLECEDOR ADHESIV. CLV-15 | ADHESIVE TRIM CLV-15 | _ | 1 | _ | _ | _ | | | |
| | Z488101000 | EMBELLECEDOR ADHE. CLV-15-D | ADHES. TRIM CLV-15-D | _ | _ | 1 | _ | _ | | | |
| | Z448101000 | EMBELLECEDOR ADHE. CLV-21-C | ADHES. TRIM CLV-21-C | _ | _ | _ | 1 | _ | | | |
| | Z508101000 | EMBELLECEDOR ADH. CLV-21-CD | ADHES. TRIM CLV-21-CD | _ | _ | _ | _ | 1 | | | |
| | Z402907000 | FRENTE EXTRAIBLE | REMOVABLE FRONT | 1 | 1 | _ | _ | _ | | | |
| | Z472901000 | FRENTE EXTRAIBLE | REMOVABLE FRONT | _ | _ | 1 | _ | _ | | | |
| | Z422907000 | FRENTE EXTRAIBLE | REMOVABLE FRONT | _ | _ | _ | 1 | _ | | | |
| | Z492901000 | FRENTE EXTRAIBLE | REMOVABLE FRONT | _ | _ | _ | _ | 1 | | | |
| | R663062000 | BOTON DE MANDO | CONTROL BUTTON | 1 | 1 | 2 | 1 | 2 | | | |
| | Z203033000 | INTERRUPTOR GENERAL | POWER SWITCH | 1 | 1 | _ | 1 | _ | | | |
| | R693055000 | PILOTO VERDE 41227000C7 | GREEN PILOT 41227000C7 | _ | 1 | 1 | 1 | 1 | | | |
| | Z403033000 | PULSADOR ACLARADO | RINSE BUTTON | _ | 1 | 1 | 1 | 1 | | | |
| | | | | | | | | | | | |
| | | | | | | | | | | | |
| | | | | | | | | | | | |
| | | | | | | | | | | | |
| | | | | | | | | | | | |
| | | | | | | | | | | | |
| | | | | | | | | | | | |
| | | | | | | | | | | | |
| | | | | | | | | | | | |
| | | | | | | | | | | | |
| | | | | | | | | | | | |
| | | | | | | | | | | | |
| | | | | | | | | | | | |
| | | | | | | | | | | | |
| | | | | | | | | | | | |
| | | | | | | | | | | | |
| | | | | | | | | | | | |

| MOD. | LAVAVASOS | ZONA | PIEZAS ESPECIFICAS PARA LA VERSION DOCRILUC | PLANO | |
|---|---|---|---|---|---|

| ITEM | CODIGO | DENOMINACION | TEXTO | DLV-12 (LVC-12) | DLV-15 (LVC-15) | DLV-15D (LVC-15D) | DLV-21 (LVC-21) | DLV-21-D (LVC-21D) | DLV-21-B (LVC-21B) | | |
|---|---|---|---|---|---|---|---|---|---|---|---|
| | Z464602000 | ASA CHAPA LVS | PLATE HANDLE LVS | 1 | 1 | 1 | 1 | 1 | 1 | | ELIMINADO 11.11.09 |
| | Z468633000 | ASA | HANDLE | 1 | 1 | 1 | 1 | 1 | 1 | | INTRODUCIDO 11.11.09 |
| | Z461401000 | EMBELLECEDOR ADHESIV. DLV-12 | ADHESIVE TRIM DLV-12 | 1 | _ | _ | _ | _ | _ | | |
| | Z411401000 | EMBELLECEDOR ADHESIV. DLV-15 | ADHESIVE TRIM DLV-15 | _ | 1 | _ | _ | _ | _ | | |
| | Z481401000 | EMBELLECEDOR ADHE. DLV-15-D | ADHES. TRIM DLV-15-D | _ | _ | 1 | _ | _ | _ | | |
| | Z441401000 | EMBELLECEDOR ADHES DLV-21 | ADHESIVE TRIM DLV-21 | _ | _ | _ | 1 | _ | _ | | |
| | Z501401000 | EMBELLECEDOR ADHES DLV-21-D | ADHESIVE TRIM DLV-21-D | _ | _ | _ | _ | 1 | _ | | |
| | Z451401000 | EMBELLECEDOR ADHES DLV-21-B | ADHESIVE TRIM DLV-21-B | | _ | _ | _ | _ | 1 | | |
| | Z402907000 | FRENTE EXTRAIBLE | REMOVABLE FRONT | 1 | 1 | _ | _ | _ | _ | | |
| | Z472901000 | FRENTE EXTRAIBLE | REMOVABLE FRONT | _ | _ | 1 | _ | _ | _ | | |
| | Z422907000 | FRENTE EXTRAIBLE | REMOVABLE FRONT | _ | _ | _ | 1 | _ | _ | | |
| | Z492901000 | FRENTE EXTRAIBLE | REMOVABLE FRONT | _ | _ | _ | _ | 1 | _ | | |
| | Z432903000 | FRENTE EXTRAIBLE 21B | REMOVABLE FRONT 21B | | _ | _ | _ | _ | 1 | | |
| | R663062000 | BOTON DE MANDO | CONTROL BUTTON | 1 | 1 | 2 | 1 | 2 | 1 | | |
| | Z203033000 | INTERRUPTOR GENERAL | POWER SWITCH | 1 | 1 | _ | 1 | _ | _ | | |
| | R693055000 | PILOTO VERDE 41227000C7 | GREEN PILOT 41227000C7 | _ | 1 | 1 | 1 | 1 | 1 | | |
| | Z403033000 | PULSADOR ACLARADO | RINSE BUTTON | _ | 1 | 1 | 1 | 1 | _ | | |
| | Z213033000 | PULSADOR MARCHA | START BUTTON | _ | _ | _ | _ | _ | 1 | | |

| MOD. | LAVAVASOS | ZONA | PIEZAS ESPECIFICAS PARA LA VERSION GAGGIA | PLANO | |
|---|---|---|---|---|---|

| ITEM | CODIGO | DENOMINACION | TEXTO | GX-4C (LVC-15) | GX-5C (LVC-21) | | | | | | |
|---|---|---|---|---|---|---|---|---|---|---|---|
| | Z464602000 | ASA CHAPA LVS | PLATE HANDLE LVS | 1 | 1 | | | | | | |
| | Z414601000 | EMBELLECEDOR ADHESIV. GX-4C | ADHESIVE TRIM GX-4C | 1 | _ | | | | | | |
| | Z444601000 | EMBELLECEDOR ADHESIV. GX-5C | ADHESIVE TRIM GX-5C | _ | 1 | | | | | | |
| | Z402907000 | FRENTE EXTRAIBLE | REMOVABLE FRONT | 1 | _ | | | | | | |
| | Z422907000 | FRENTE EXTRAIBLE | REMOVABLE FRONT | _ | 1 | | | | | | |
| | Z658813000 | BOTON DE MANDO | CONTROL BUTTON | 1 | 1 | | | | | | |
| | Z203033000 | INTERRUPTOR GENERAL | POWER SWITCH | 1 | 1 | | | | | | |
| | R693055000 | PILOTO VERDE 41227000C7 | GREEN PILOT 41227000C7 | 1 | 1 | | | | | | |
| | Z403033000 | PULSADOR ACLARADO | RINSE BUTTON | 1 | 1 | | | | | | |

| MOD. | LAVAVASOS | ZONA | PIEZAS ESPECIFICAS PARA LA VERSION FUTURMAT | PLANO | |
|---|---|---|---|---|---|

| ITEM | CODIGO | DENOMINACION | TEXTO | FV-20C (LVC-15) | FV-26C (LVC-21) | | | | | | |
|---|---|---|---|---|---|---|---|---|---|---|---|
| | Z464602000 | ASA CHAPA LVS | PLATE HANDLE LVS | 1 | 1 | | | | | | |
| | Z414501000 | EMBELLECEDOR ADHESI. FV-20C | ADHES. TRIM FV-20C | 1 | _ | | | | | | |
| | Z444501000 | EMBELLECEDOR ADHESI. FV-26C | ADHES. TRIM FV-26C | _ | 1 | | | | | | |
| | Z402907000 | FRENTE EXTRAIBLE | REMOVABLE FRONT | 1 | _ | | | | | | |
| | Z422907000 | FRENTE EXTRAIBLE | REMOVABLE FRONT | _ | 1 | | | | | | |
| | Z204504000 | BOTON DE MANDO 6 GRIS | CONTROL BUTTON 6 GREY | 1 | 1 | | | | | | |
| | Z203033000 | INTERRUPTOR GENERAL | POWER SWITCH | 1 | 1 | | | | | | |
| | R693055000 | PILOTO VERDE 41227000C7 | GREEN PILOT 41227000C7 | 1 | 1 | | | | | | |
| | Z403033000 | PULSADOR ACLARADO | RINSE BUTTON | 1 | 1 | | | | | | |

| MOD. | LAVAVASOS | ZONA | PIEZAS ESPECIFICAS PARA LA VERSION RESTOMAT | PLANO | |
|---|---|---|---|---|---|

| ITEM | CODIGO | DENOMINACION | TEXTO | KM-21 (LVC-21) | KM-21B (LVC-21B) | | | | | | |
|---|---|---|---|---|---|---|---|---|---|---|---|
| | Z464602000 | ASA CHAPA LVS | PLATE HANDLE LVS | 1 | 1 | | | | | | |
| | Z444901000 | EMBELLECEDOR ADH. RESTOMAT | ADHES. TRIM RESTOMAT | 1 | _ | | | | | | |
| | Z454901000 | EMBELLECEDOR ADH. RESTOMAT | ADHES. TRIM RESTOMAT | _ | 1 | | | | | | |
| | Z422907000 | FRENTE EXTRAIBLE | REMOVABLE FRONT | 1 | _ | | | | | | |
| | Z432903000 | FRENTE EXTRAIBLE | REMOVABLE FRONT | _ | 1 | | | | | | |
| | Z214902000 | BOTON DE MANDO | CONTROL BUTTON | 1 | 1 | | | | | | |
| | Z203033000 | INTERRUPTOR GENERAL | POWER SWITCH | 1 | _ | | | | | | |
| | R693055000 | PILOTO VERDE 41227000C7 | GREEN PILOT 41227000C7 | 1 | 1 | | | | | | |
| | Z403033000 | PULSADOR ACLARADO | RINSE BUTTON | 1 | 1 | | | | | | |

| MOD. | LAVAVASOS | ZONA | PIEZAS ESPECIFICAS PARA LA VERSION SHARPLINE | PLANO | |
|---|---|---|---|---|---|

| ITEM | CODIGO | DENOMINACION | TEXTO | KM-21 (LVC-21) | | | | | | | |
|---|---|---|---|---|---|---|---|---|---|---|---|
| | Z440311000 | CAJA SOLDADA 21B (FI+Azk UK) | WELDED BOX 21B (FI+Azk UK) | 1 | | | | | | | |
| | Z200512000 | ASA PUERTA COOL GRAY 10 | DOOR HANDLE COOL GRAY 10 | 1 | | | | | | | |
| | Z452902000 | EMBELLECEDOR ADH. SHARPLINE | ADHES. TRIM SHARPLINE | 1 | | | | | | | |
| | Z432903000 | FRENTE EXTRAIBLE | REMOVABLE FRONT | 1 | | | | | | | |
| | R663062000 | BOTON DE MANDO | CONTROL BUTTON | 1 | | | | | | | ELIMINADO 11.01.10 |
| | Z214902000 | BOTON DE MANDO | CONTROL BUTTON | 1 | | | | | | | INTRODUCIDO 11.01.10 |
| | R693055000 | PILOTO VERDE 41227000C7 | GREEN PILOT 41227000C7 | 1 | | | | | | | |
| | Z213033000 | PULSADOR MARCHA | START BUTTON | 1 | | | | | | | ELIMINADO 11.01.10 |
| | Z203080000 | PULSADOR MARCHA NEGRO | BLACK START BUTTON | 1 | | | | | | | INTRODUCIDO 11.01.10 |
| | Z230902000 | PASAMUROS DETERGENTE | DETERGENT WALL BUSHING | 1 | | | | | | | |

| MOD. | LAVAVASOS | ZONA | PIEZAS ESPECIFICAS PARA LA VERSION CULION | PLANO | |
|---|---|---|---|---|---|

| ITEM | CODIGO | DENOMINACION | TEXTO | VGL 10 (LVC-21B) | | | | | | | |
|---|---|---|---|---|---|---|---|---|---|---|---|
| | Z448002000 | ESCUADRA AMARRE TAPA EDESA | ATTACHMENT BRACKET COVER | 2 | | | | | | | |
| | Z200550000 | ASA PUERTA COMPLETA | COMPLETE DOOR HANDLE | 1 | | | | | | | |
| | Z454501000 | EMBELLECEDOR ADHESIV. VGL10 | ADHESIVE TRIM VGL10 | 1 | | | | | | | |
| | Z448005000 | FRENTE EXTRAIBLE EDESA | EXTRACTABLE FRONT EDESA | 1 | | | | | | | |
| | Z468008000 | BASE EXTR. LV-1200-1500-2100 | EXTR. BASE LV-1200-1500-2100 | 1 | | | | | | | |
| | Z448007000 | TAPA COMPLETA LV-2100 | COMPLETE COVER LV-2100 | 1 | | | | | | | |
| | Z448009000 | ESCUADRA AMARRE JUNTA TAPA | FASTENING BRACKET SEAL COV | 1 | | | | | | | |
| | Z448010000 | PERFIL TAPA LV-2100 EDESA | COVER PROFILE LV-2100 EDESA | 1 | | | | | | | |
| | Z468025000 | DISTANCIA. INTERRUPTOR RELE | DISTANCE RELAY SWITCH | 1 | | | | | | | |
| | Z218036000 | SOPORTE COMPONENTES | COMPONENT SUPPORT | 1 | | | | | | | |
| | T302829000 | DISTANCIADOR COMPONENTES | SPACER COMPONENTS | 2 | | | | | | | |
| | Z393005000 | TERMOSTATO CALDERIN | WASH DRUM THERMOSTAT | 1 | | | | | | | |
| | Z748008000 | SOPORTE BULBO TERMOSTATO | THERMOSTAT BULB SUPPORT | 1 | | | | | | | |
| | Z218011000 | PROGRAMADOR GICAR TECLADO | KEYPAD GICAR PROGRAMMER | 1 | | | | | | | |
| | Z218012000 | PROGRAMADOR GICAR C.RELES | GICAR PROGRAMMER WITH REL | 1 | | | | | | | |
| | Z218030000 | INTERRUPTOR RELE C.I. | C.I. RELAY SWITCH | 1 | | | | | | | |
| | Z458002000 | ESQUEMA TEORICO LV 2100-B | THEORETICAL DIAGRAM LV 2100 | 1 | | | | | | | PLANO HC-17966 |
| | Z448017000 | PLANO MONTAJE LV EDESA | LV EDESA ASSEMBLY PLAN | 1 | | | | | | | PLANO HC-18101 |
| | Z218013000 | CABLEADO GICAR | WIRING GICAR | 1 | | | | | | | |
| | Z448016000 | INSTALACION ELEC.LAVAVASOS ED | GLASS WASHER ELEC. INSTALL | 1 | | | | | | | |
| | Z283022000 | CABLE TIERRA M.BOMBA | EARTH WIRE M. PUMP | 1 | | | | | | | |
| | Z454502000 | FOLLETO INSTRUCCIONES | INSTRUCTION LEAFLET. | 1 | | | | | | | |
| | | | | | | | | | | | |
| | | | | | | | | | | | |
| | | | | | | | | | | | |
| | | | | | | | | | | | |
| | | | | | | | | | | | |
| | | | | | | | | | | | |
| | | | | | | | | | | | |
| | | | | | | | | | | | |

# LVR - 10; LVC - 12; A-9; LVC-12 T; CLV-12-C; DBY-1000;MLV-35; ASC-12

(1) (2) (3) (4) (5)

1N ~ 240V. 50 Hz.
2 ~ 220V. 50/60 Hz.

3N ~ 380 - 415 V.

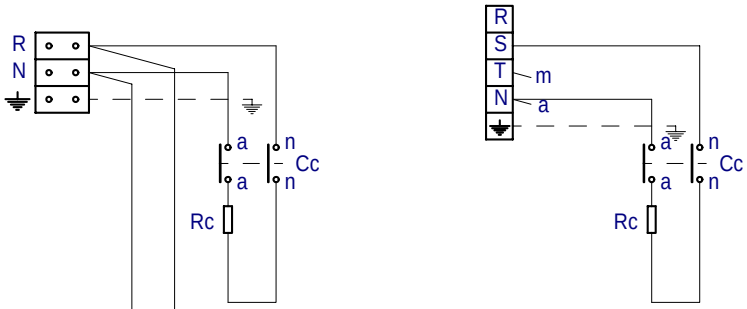


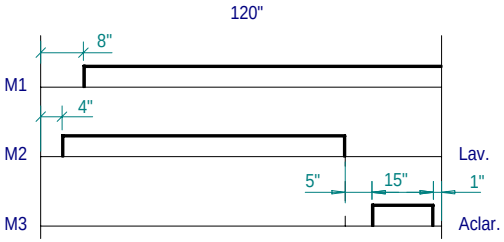


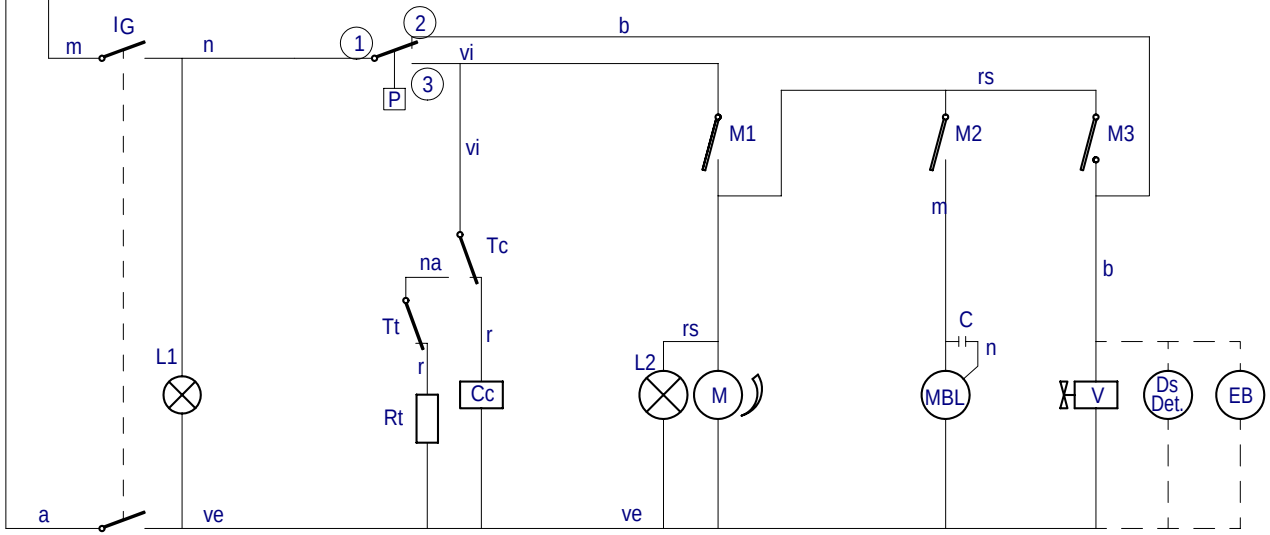


CODIGO DE COLORES:

r = rojo-red-rouge
m = marron-brown-marron
g = gris-grey-gris
n = negro-black-noir
a = azul-blue-bleu
b = blanco-white-blanc
vi = violeta-violette-violet
am = amarillo-yellow-jaune
na = naranja-orange-orange
rs = rosa-rose-pink
ve = verde-green-vert
am/ve = amarillo verde-yellow green-jaune vert

**Z393010000**

$I_G$= Interruptor General
L1 = Lampara de marcha
P = Presostato
Tc = Termostato calderin
Cc = Contactor calderin
Rc = Resistencia calderin
Ds Det = Dosificador de detergente (opcional)
EB = Electrobomba de presión (Opcional)
Tt = Termostato tanque
Rt = Resistencia tanque

M = Motor programador
M1 = Micro programador marcha
M2 = Micro programador lavado
M3 = Micro programador aclarado
L2 = Lámpara de ciclo
MBL= Motobomba lavado
C = Condensador de motobomba
V = Válvula de llenado y aclarado

| | | | | | | |
|---|---|---|---|---|---|---|
| | Esquema teorico adhesivo | | Papel adhesivo | Z-393010 | | |
| Nº | Pieza | Cant. | Material | Nº Clasificacion | Acabado | |
| Nº | Modificacion | | Propuesta de | Fecha | Tolerancias generales | |
| 1 | Introducir denominación LVC-12T | | Palacio | 20-4-98 | | |
| 2 | Introducir modelo CORECO | | Palacio | 28-1-00 | | |
| 3 | DBY-1000 bertsioa sartu | | rbenito | 2007-01-23 | | |
| 4 | MLV-35 bertsioa sartu | | rbenito | 2007-05-02 | | |
| 5 | ASC-12 bertsioa sartu | | rbenito | 2009-04-24 | | |

| | Firma | Fecha |
|---|---|---|
| Dibujado | S. N. | 7-10-97 |
| Proyectado | | |
| Comprobado | | |
| Escala | | |

FAGOR
Fagor Industrial,Koop.Elk, Mugatua

Mecanizado superficial

LAVAVASOS

Plano numero HC-16738 -5

Sustituye al Nº

Sustituido por

Plano hau ez daiteke erabili ez berrizta gure baimenitz gabe

1N ~ 240V. 50 Hz.
2 ~ 220V. 50/60 Hz.

3N ~ 380 - 415 V.

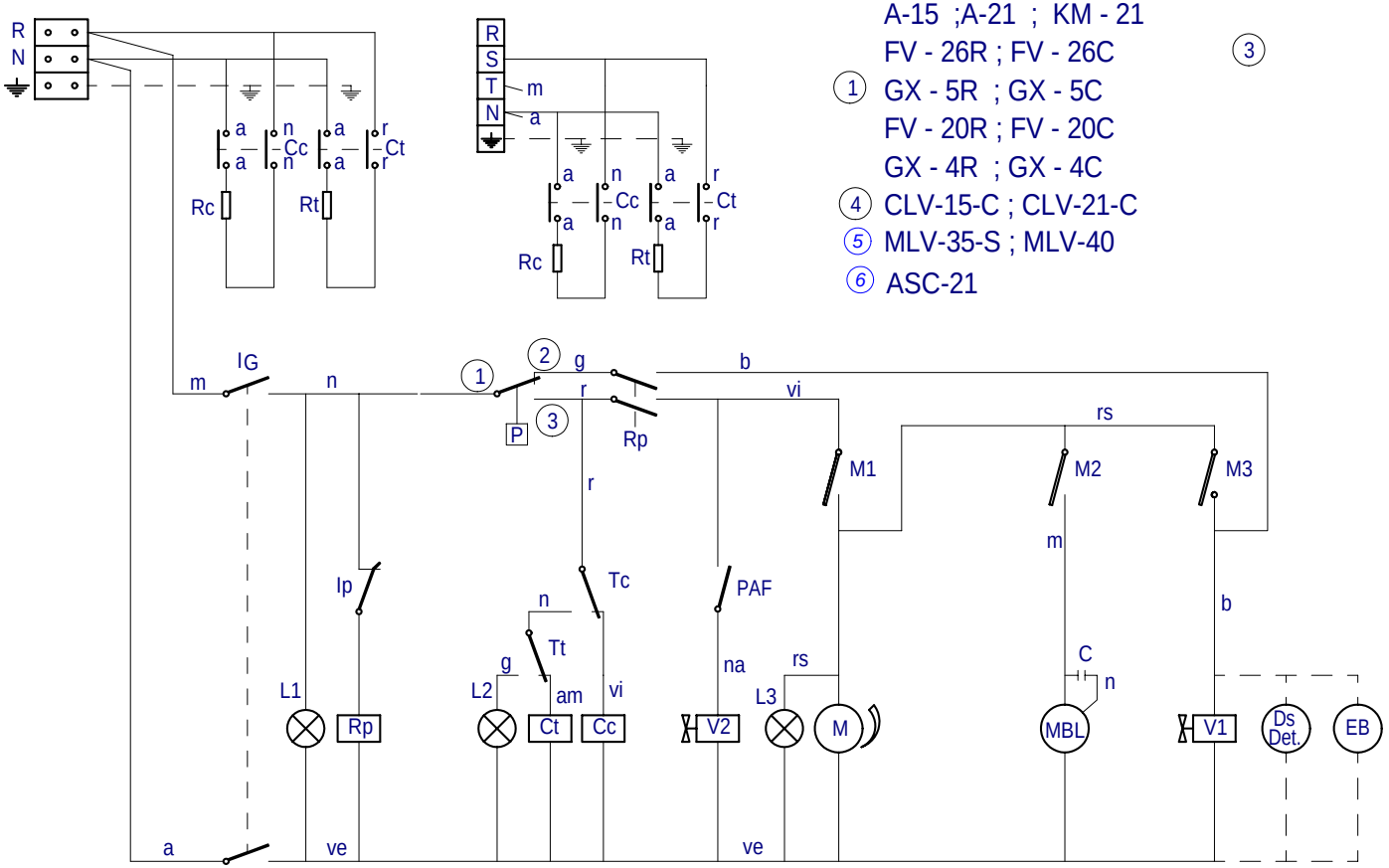


LVR - 14 ; LVC - 15
LVR - 20 ; LVC - 21
A-15 ;A-21 ; KM - 21
FV - 26R ; FV - 26C
(1) GX - 5R ; GX - 5C
FV - 20R ; FV - 20C
GX - 4R ; GX - 4C
(4) CLV-15-C ; CLV-21-C
(5) MLV-35-S ; MLV-40
(6) ASC-21

(3)

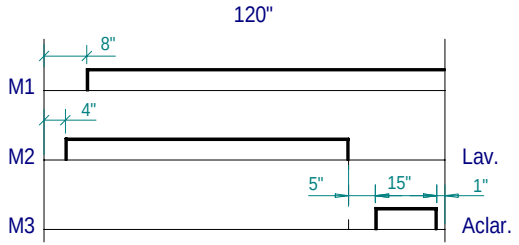


CODIGO DE COLORES:
r = rojo-red-rouge
m = marron-brown-marron
g = gris-grey-gris
n = negro-black-noir
a = azul-blue-bleu
b = blanco-white-blanc
vi = violeta-violette-violet
am = amarillo-yellow-jaune
na = naranja-orange-orange
rs = rosa-rose-pink
ve = verde-green-vert
am/ve = amarillo verde-yellow green-jaune vert

**Z403014000**

$I_G$= Interruptor General
L1 = Lampara de marcha
Ip = Micro de puerta
Rp = Relé puerta
P = Presostato
Tc = Termostato calderin
Tt = Termostato tanque
Cc = Contactor calderin
Ct = Contactor tanque
L2 = Lampara máquina preparada
Rc = Resistencia calderin
Rt = Resistencia tanque
Ds Det = Dosificador de detergente (opcional)

M = Motor programador
M1 = Micro programador marcha
M2 = Micro programador lavado
M3 = Micro programador aclarado
L3 = Lámpara de ciclo
MBL= Motobomba lavado
C = Condensador de motobomba
V1 = Válvula de llenado y aclarado
V2 = Válvula de aclarado en frio
EB = Electrobomba de presión (Opcional)
PAF= Pulsador aclarado en frio

| | | | | | | |
|---|---|---|---|---|---|---|
| | Esquema teorico adhesivo | | Papel adhesivo | Z-403014 | | |
| Nº | Pieza | Cant. | Material | Nº Clasificacion | Acabado | |
| Nº | Modificacion | | Propuesta de | Fecha | Tolerancias generales | |
| (6) | ASC-21 ASCASO modeloa sartzea | | rbenito | 2009-04-24 | | |
| (2) | Modificar color en Tt | | I. Urisabel | 20-4-99 | | |
| (3) | Introducir versión KM - 21 | | J.M.P. | 22-7-99 | | |
| (4) | Introducir modelos CORECO | | Palacio | 28-1-00 | | |
| (5) | MOVILFRIT modeloak sartzea | | mgangoiti | 07-04-17 | | |

| | Firma | Fecha |
|---|---|---|
| Dibujado | S. N. | 28-9-95 |
| Proyectado | | |
| Comprobado | | |
| Escala | | |

FAGOR
Fagor Industrial,Koop.Elk, Mugatua

Mecanizado superficial

LAVAVASOS

Plano numero HC-16496 -6
Sustituye al N°
Sustituido por

Plano hau ez daiteke erabil ez berrizta gure baimenitz gabe

1N ~ 240V. 50 Hz.
2 ~ 220V. 50/60 Hz.

3N ~ 380 - 415 V.

LVR-14 D; LVC-15 D
LVR-20 D; LVC-21 D
① CLV-15-CD; CLV-21-CD
② MLV-35-D ; MLV-40-D

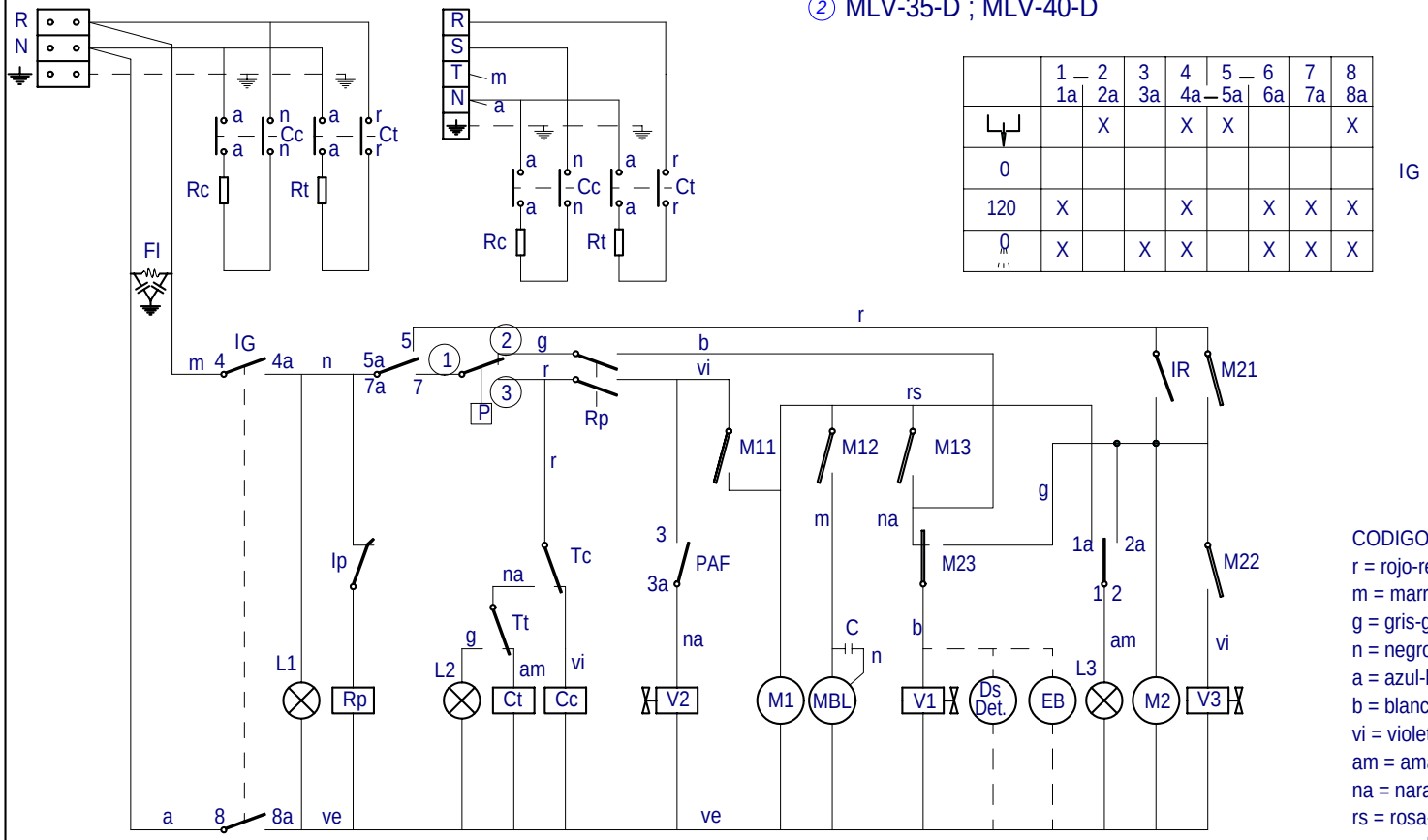


| | 1 — 2 | 3 | 4 | 5 — 6 | 7 | 8 |
|---|---|---|---|---|---|---|
| | 1a 2a | 3a | 4a — 5a | 6a | 7a | 8a |
| ⏚ | X | | X | X | | X |
| 0 | | | | | | |
| 120 | X | | X | | X | X | X |
| 0 | X | X | X | | X | X | X |

IG

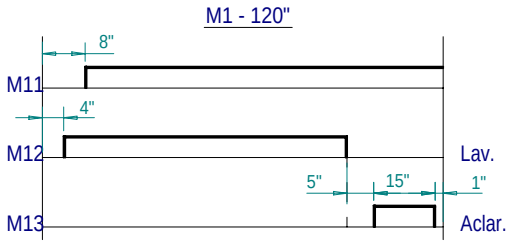


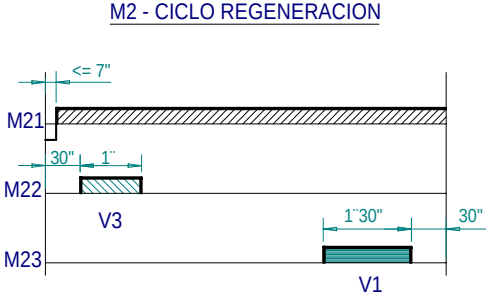


CODIGO DE COLORES:
r = rojo-red-rouge
m = marron-brown-marron
g = gris-grey-gris
n = negro-black-noir
a = azul-blue-bleu
b = blanco-white-blanc
vi = violeta-violette-violet
am = amarillo-yellow-jaune
na = naranja-orange-orange
rs = rosa-rose-pink
ve = verde-green-vert
am/ve = amarillo verde-yellow green-jaune vert

**Z473002000**

$I_G$= Interruptor General
L1 = Lampara de marcha
Ip = Micro de puerta
Rp = Relé puerta
P = Presostato
Tc = Termostato calderin
Tt = Termostato tanque
Cc = Contactor calderin
Ct = Contactor tanque
L2 = Lampara máquina preparada
Rc = Resistencia calderin
Rt = Resistencia tanque
Ds Det = Dosificador de detergente (opcional)
V3 = Electroválvula regeneración
IR = Pulsador regeneración

M1 = Motor programador
M11 = Micro programador marcha
M12 = Micro programador lavado
M13 = Micro programador aclarado
M2 = Motor programador
M21 = Micro programador marcha regeneración
M22 = Micro programador regeneración por depósito de sal
M23 = Micro programador regeneración por descalcificador
L3 = Lampara de ciclo y regeneración
MBL= Motobomba lavado
C = Condensador de motobomba
V1 = Válvula de llenado y aclarado
V2 = Válvula de aclarado en frio
EB = Electrobomba de presión (Opcional)
PAF= Pulsador aclarado en frio

| | | | | | |
|---|---|---|---|---|---|
| | Esquema teorico adhesivo | | Papel adhesivo | Z-473002 | |
| Nº | Pieza | Cant. | Material | Nº Clasificacion | Acabado |
| Nº | Modificacion | | Propuesta de | Fecha | Tolerancias generales |
| ① | Introducir modelo CORECO | | Palacio | 28-1-00 | |
| ② | MOVILFRIT modeloak sartu | | mgangoiti | 07-04-17 | |

| | Firma | Fecha |
|---|---|---|
| Dibujado | S. N. | 6-2-96 |
| Proyectado | | |
| Comprobado | | |
| Escala | | |

FAGOR
Fagor Industrial,Koop.Elk, Mugatua

Mecanizado superficial

LAVAVASOS

Plano numero HC-16531 -2

Sustituye al Nº

Sustituido por

Plano hau ez daiteke erabili ez berrizta gure baimenitz gabe

1N ~ 240V. 50 Hz.

2 ~ 220V. 50/60 Hz.

3N ~ 380 - 415 V.

LVC - 21 B ; LVC-21C ; KM - 21 B

CLV - 21 - CB

MLV - 40 - B, LAB-2100 B

| | 1 – 1a | 2 2a | 3 3a | 4 4a | 5 – 5a | 6 6a | 7 7a | 8 8a |
|---|---|---|---|---|---|---|---|---|
| | | X | | X | X | | | X |
| 0 | | | | | | | | |
| 120" | X | | | X | | X | X | X |
| | X | | X | X | | X | X | X |

IG

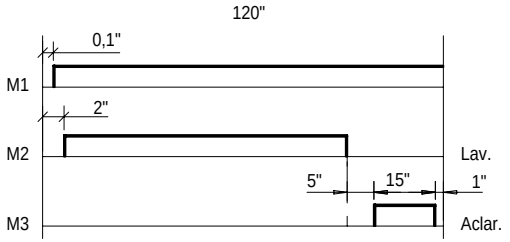


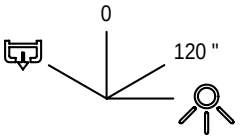


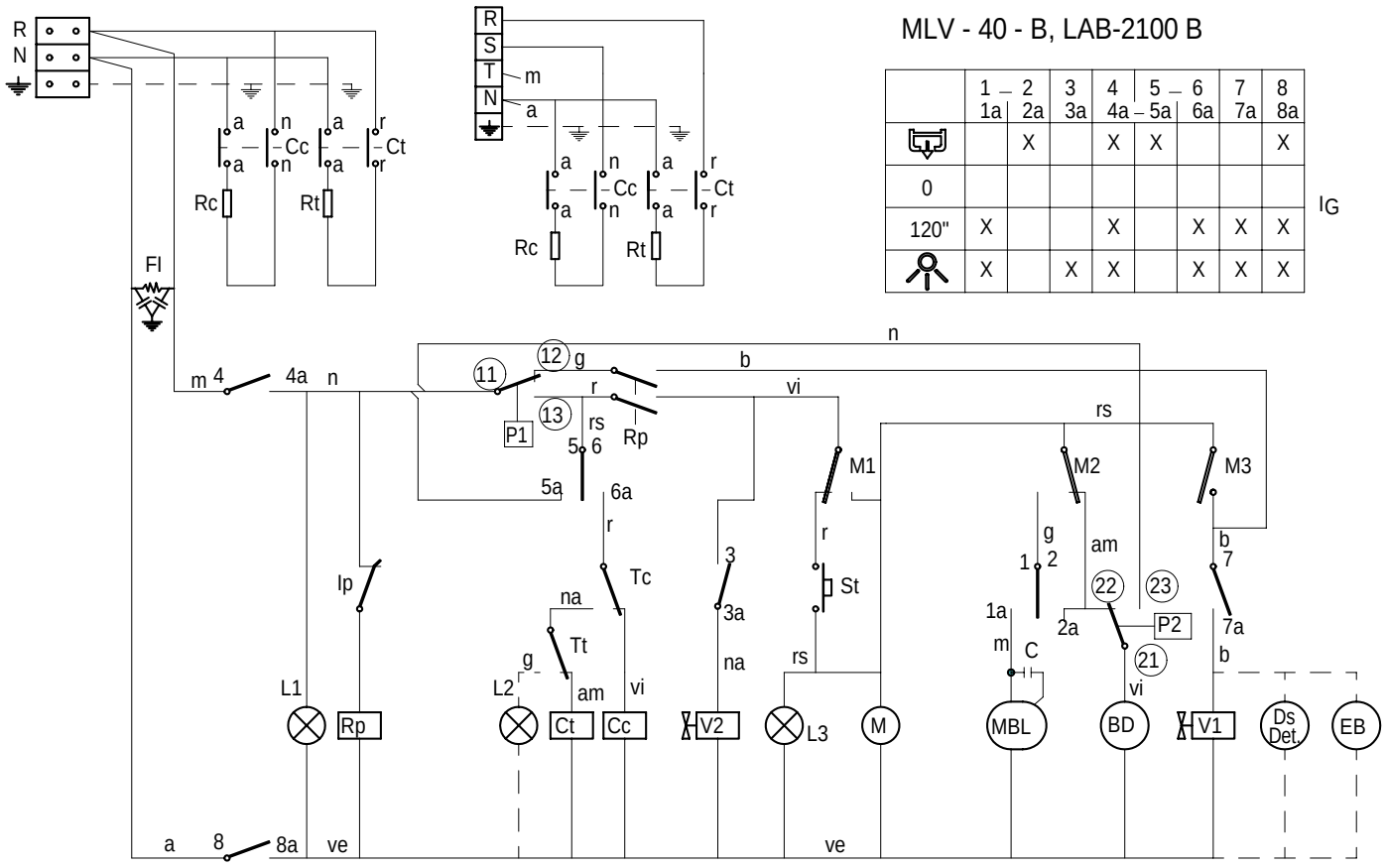


CODIGO DE COLORES:

r = rojo-red-rouge
m = marron-brown-marron
g = gris-grey-gris
n = negro-black-noir
a = azul-blue-bleu
b = blanco-white-blanc
vi = violeta-violette-violet
am = amarillo-yellow-jaune
na = naranja-orange-orange
rs = rosa-rose-pink
ve = verde-green-vert
am/ve = amarillo verde-yellow green-jaune vert

**Z433009000**

$I_G$= Interruptor General
L1 = Lampara de marcha
Ip = Micro de puerta
Rp = Relé puerta
P1 = Presostato
Tc = Termostato calderin
Tt = Termostato tanque
Cc = Contactor calderin
Ct = Contactor tanque
L2 = Lampara máquina preparada
Rc = Resistencia calderin
St = Pulsador de marcha
FI = Filtro de interferencias
BD = Bomba de Desagüe

Rt = Resistencia tanque
M = Motor programador
M1 = Micro programador marcha
M2 = Micro programador lavado
M3 = Micro programador aclarado
L3 = Lámpara de ciclo
MBL= Motobomba lavado
C = Condensador de motobomba
V1 = Válvula de llenado y aclarado
Ds Det = Dosificador de detergente (opcional)
P2 = Presostato de seguridad
EB = Electrobomba de presión (Opcional)
V2 = Válvula aclarado en frio

| | | | | |
|---|---|---|---|---|
| | Esquema teorico adhesivo | | Papel adhesivo | Z-433009 |
| Nº | Pieza | Cant. | Material | Nº Clasificacion |
| Nº | Modificacion | | Propuesta de | Fecha |
| 1 | Introducir modelo CORECO | | Palacio | 28-1-00 |
| 2 | MOVILFRIT modeloa sartzea | | mgangoiti | 07-04-17 |
| 3 | LVC-21C modeloa sartu | | scaro | 2008-03-14 |

Acabado

Tolerancias generales

<5± 50–100± :
5–25± : >100±
25–50± : ○±

| | Firma | Fecha |
|---|---|---|
| Dibujado | J.M.P. | 20-10-99 |
| Proyectado | | |
| Comprobado | | |
| Escala | | |

FAGOR

Fagor Industrial,Koop.Elk, Mugatua

Mecanizado superficial

LAVAVASOS

Plano numero HC-17195 -3

Sustituye al N°

Sustituido por

Plano hau ez daiteke erabil ez berrizta gure baimenitz gabe

# Mods.: LVC - 21 W

208-220-240 V. 1Ph

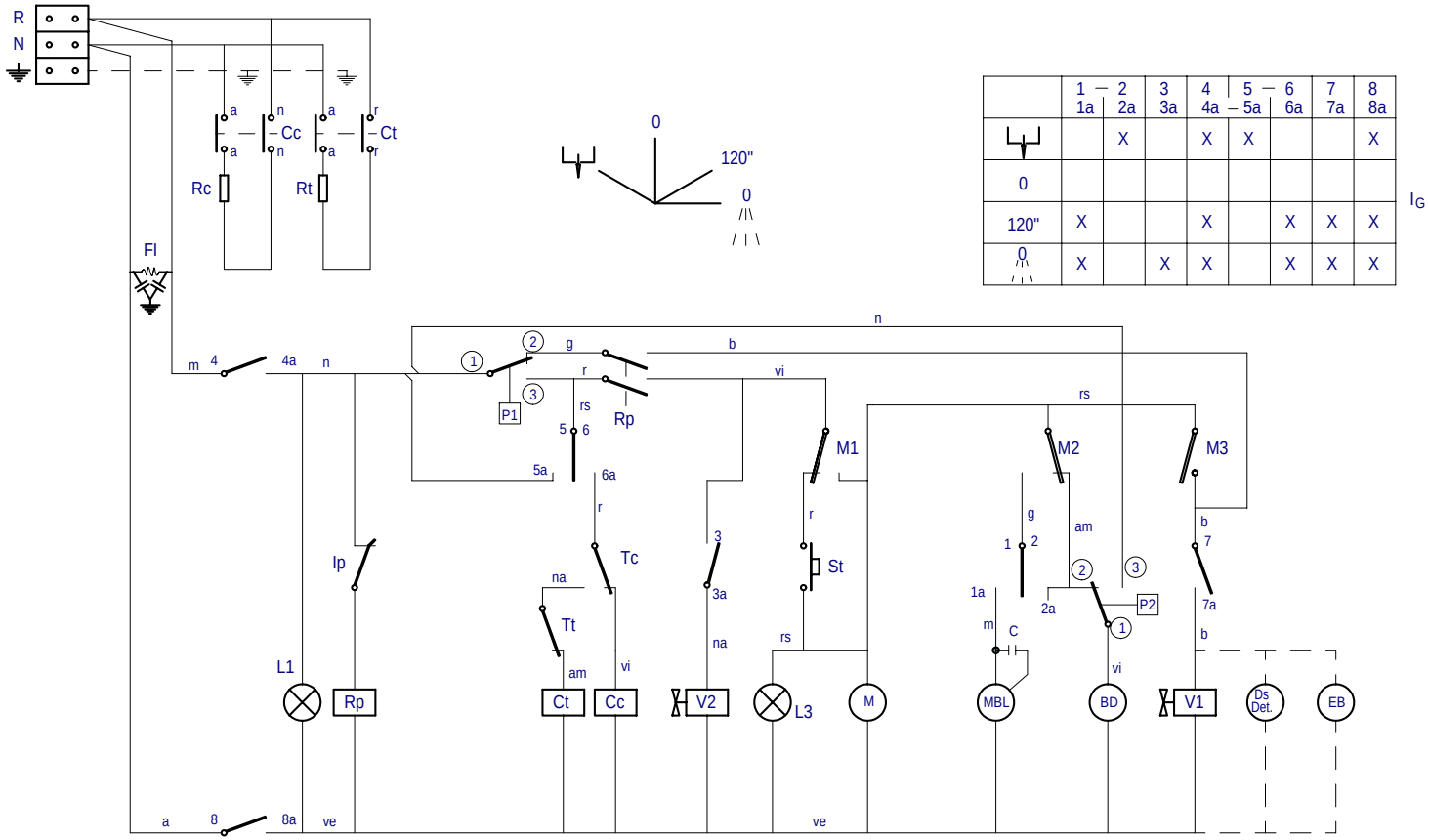





| | 1 — 2<br>1a 2a | 3<br>3a | 4<br>4a | 5 — 6<br>5a 6a | 7<br>7a | 8<br>8a |
|---|---|---|---|---|---|---|
| | | X | X | X | | X |
| 0 | | | | | | |
| 120" | X | | X | | X | X |
| 0 | X | X | X | | X | X |

$I_G$

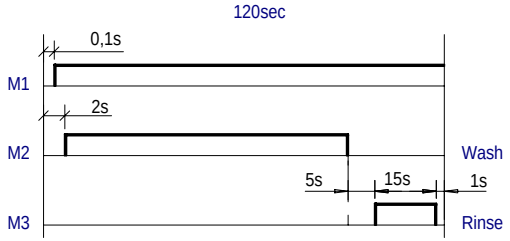


Colours code-Code de couleurs-Codigo de colores:

r = red-rouge-rojo
m = brown-marron-marron
g = grey-gris-gris
n = black-noir-negro
a = blue-bleu-azul
b = white-blanc-blanco
vi = violette-violet-violeta
am = yellow-jaune-amarillo
na = orange-orange-naranja
rs = rose-pink-rosa
ve = green-vert-verde
am/ve = yellow green-jaune vert-amar./verde

| | | |
|---|---|---|
| $I_G$= General switch | Interrupteur general | Interruptor General |
| L1 = On lamp | Témoin de marche | Lampara de marcha |
| Ip = Door micro | Micro de porte | Micro de puerta |
| Rp = Door relay | Relais de porte | Relé puerta |
| P1 = Pressure switch | Presostat | Presostato |
| Tc = Drum thermostat | Thermostat du surchauffeur | Termostato calderin |
| Tt = Tank thermostat | Thermostat de cuve | Termostato tanque |
| Cc = Drum contactor | Contacteur du surchauffeur | Contactor calderin |
| Ct = Tank contactor | Contacteur de cuve | Contactor tanque |
| L2 = Machine ready light | Témoin de marchine preparée | Lampara máquina preparada |
| Rc = Drum heating element | Resistance du surchauffeur | Resistencia calderin |
| St = Start button | Bouton de márche | Pulsador de marcha |
| FI = Interferences filter | Filtre d¨interferences | Filtro de interferencias |
| BD = Drain pump | Pompe de vidange | Bomba de Desagüe |

| | | |
|---|---|---|
| Rt = Tank heating element | Resistance de cuve | Resistencia tanque |
| M = Motor programmer | Moteur du programmateur | Motor programador |
| M1 = Micro programmer on | Micro du programm. de marche | Micro programador marcha |
| M2 = Micro programmer wash | Micro du programm. de lavage | Micro programador lavado |
| M3 = Micro programmer rinse | Micro du programm. de rincage | Micro programador aclarado |
| L3 = Cycle light | Témoin de cycle | Lámpara de ciclo |
| MBL= Motor pump wash | Motobopompe de lavage | Motobomba lavado |
| C = Motor pump condenser | Condensateur de la motopompe | Condensador de motobomba |
| V1 = Filling and rinsing valve | Valve de remplisage et de vidange | Válvula de llenado y aclarado |
| V2 = Cold rinsing valve | Valve de rincage froid | Válvula aclarado en frio |
| Ds Det = Detergent dispenser (Optional) | Doseur de detergent (Option) | Dosificador de detergente (opcional) |
| P2 = Safety pressure switch | Presostat de sécurité | Presostato de seguridad |
| EB = Electric pressure pump (Optional) | Electropompe de pression (Option) | Electrobomba de presión (Opcional) |

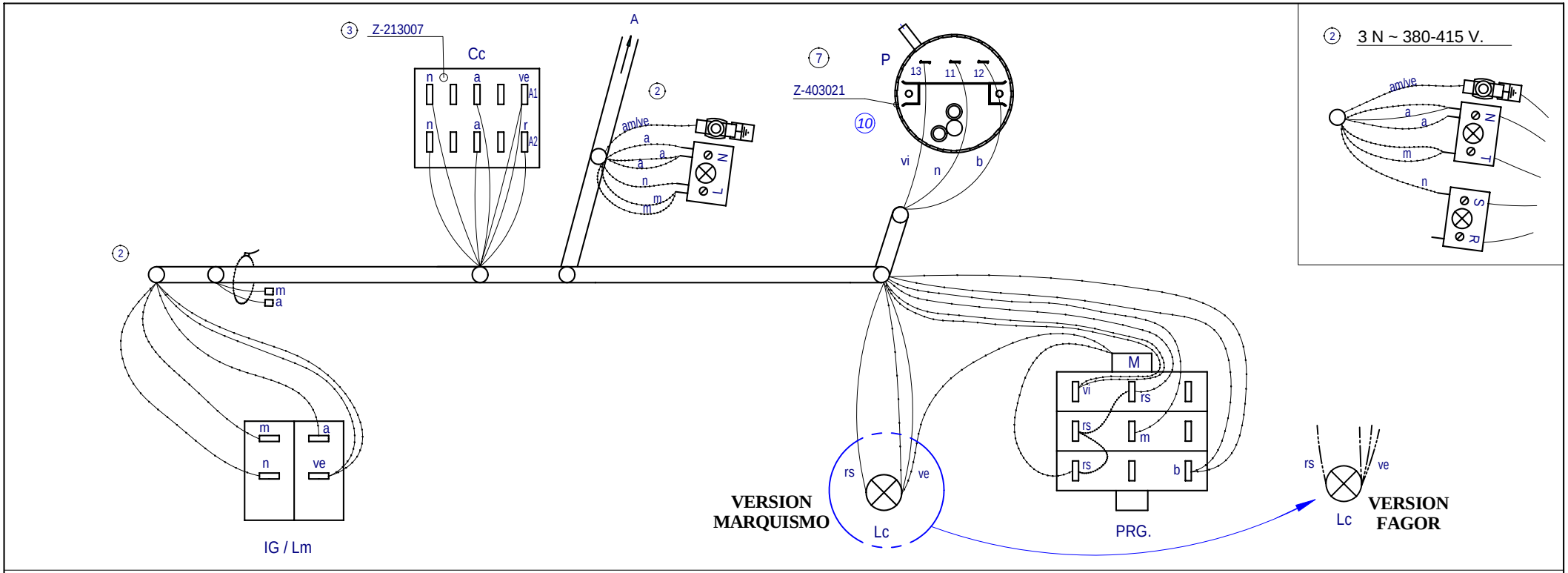


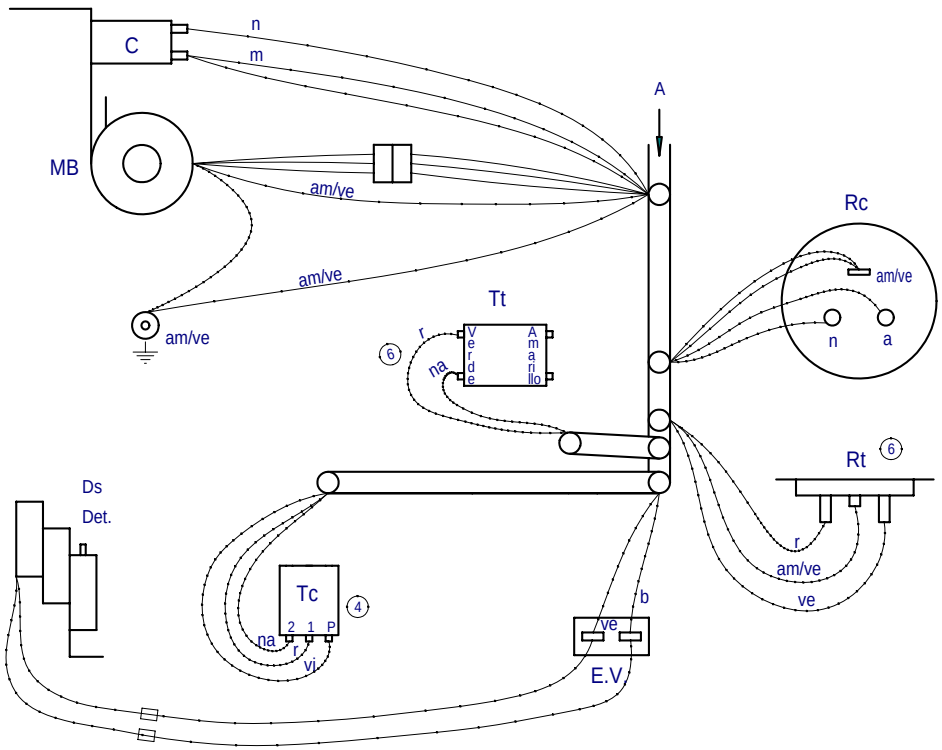


| | | | | | |
|---|---|---|---|---|---|
| | | | | | |
| | | | 5 | | |
| | Esquema de montaje LVR-10 LVC-12 | | Z-393035 | | |
| Nº | Pieza | | Nº Clasificacion | Acabado | |
| Nº | Modificacion | Propuesta de | Fecha | Tolerancias generales | |
| 8 | Modificar por nueva estetica modelos Fagor | scaro | 14-09-2005 | | |
| 9 | Correccion en nueva estetica Fagor | scaro | 2006-11-30 | | |
| 10 | Actualizar presostato por cambio proveedor | scaro | 2007-03-27 | | |
| 5 | Introducir N° Clasificación | Palacio | 10-7-97 | | |
| 4 | Cambiar Termostato y posición cables | Palacio | 17-3-97 | | |

| | Firma | Fecha |
|---|---|---|
| Dibujado | S. N. | 19-10-94 |
| Proyectado | | |
| Comprobado | | |
| Escala | | |

FAGOR

Fagor Industrial,Koop.Elk, Mugatua

Mecanizado superficial

LAVAVASOS

Plano numero HC-16386 -10

Sustituye al N°

Sustituido por

Plano hau ez daiteke erabili ez berrizta gure baimenitz gabe

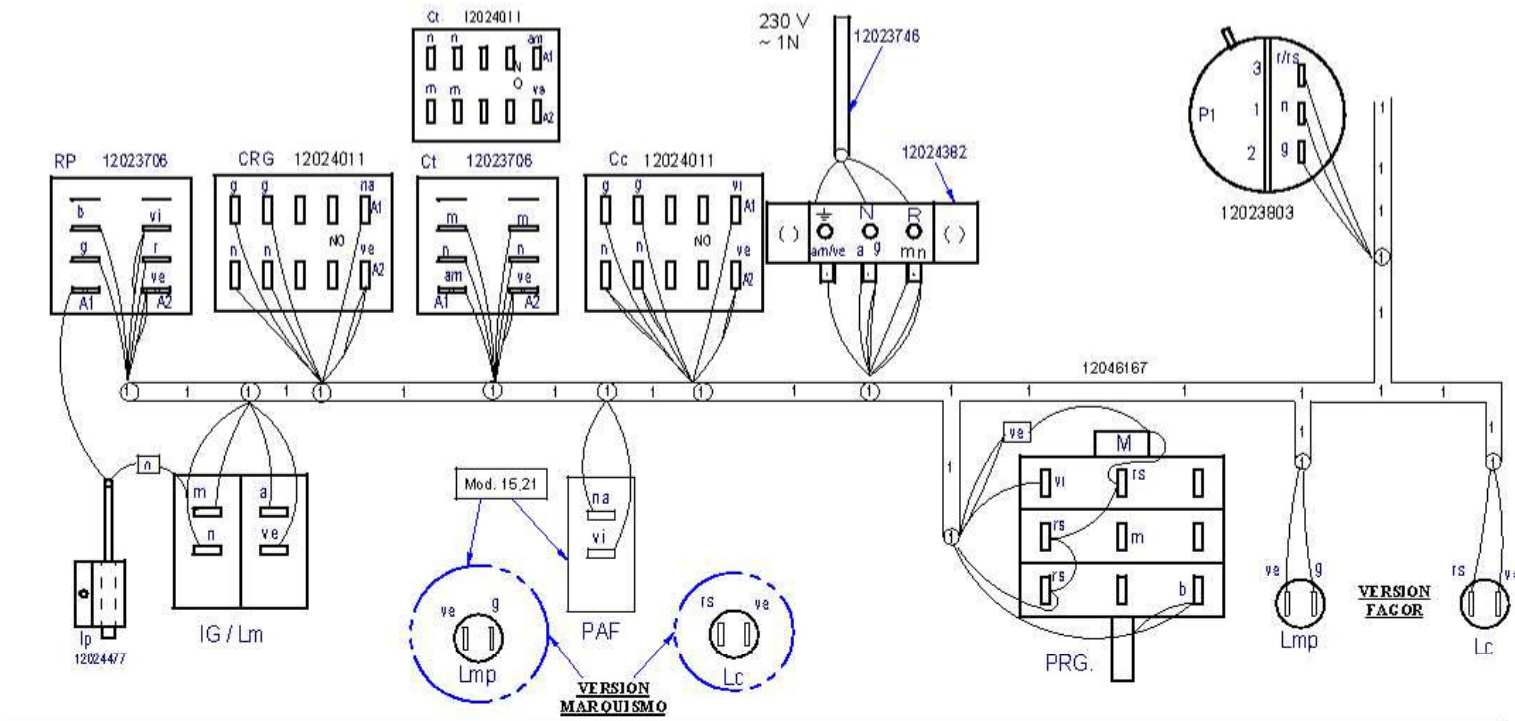


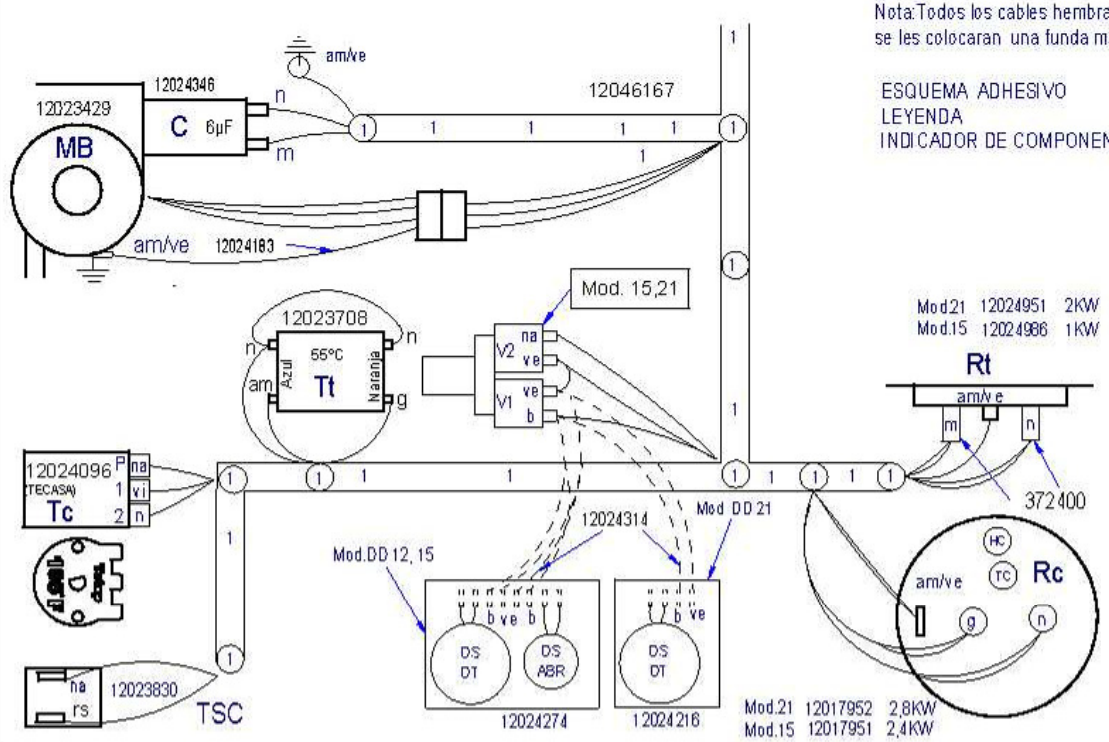


Nota:Todos los cables hembra que queden sin conectar se les colocaran una funda macho Q-578006

| | |
|---|---|
| ESQUEMA ADHESIVO | 12022139 |
| LEYENDA | 12022100 |
| INDICADOR DE COMPONENTES | Z713034000 |

| | | | | | |
|---|---|---|---|---|---|
| - | Plano Montaje LVC, 21, 15, 12 | - | 12046369 | | |
| Nº | TITLE | QTY | CODE | MATERIAL | TREATMENT |
| GENERAL TOLERANCES | ISO 2768-1 | Very Coarse | | | SHEET FORMAT: A3 |
| | | | | | DESING CENTER: ONA |
| | | | | | MAT STATUS: 00 |
| | | | | | OOC STATUS: |
| | ISO 2768-2 | LAVAVASOS | DESIGNED BY: M.MALLO | VALIDATED BY: JBUSTAGOYENA | DATE: 09 07 2012 |
| | | | | | SHEET: 1 / 1 |
| | | | | | SCALE: |
| 12046369 | REVISION | | PROPOSED BY: | | ISSUE DATE: |

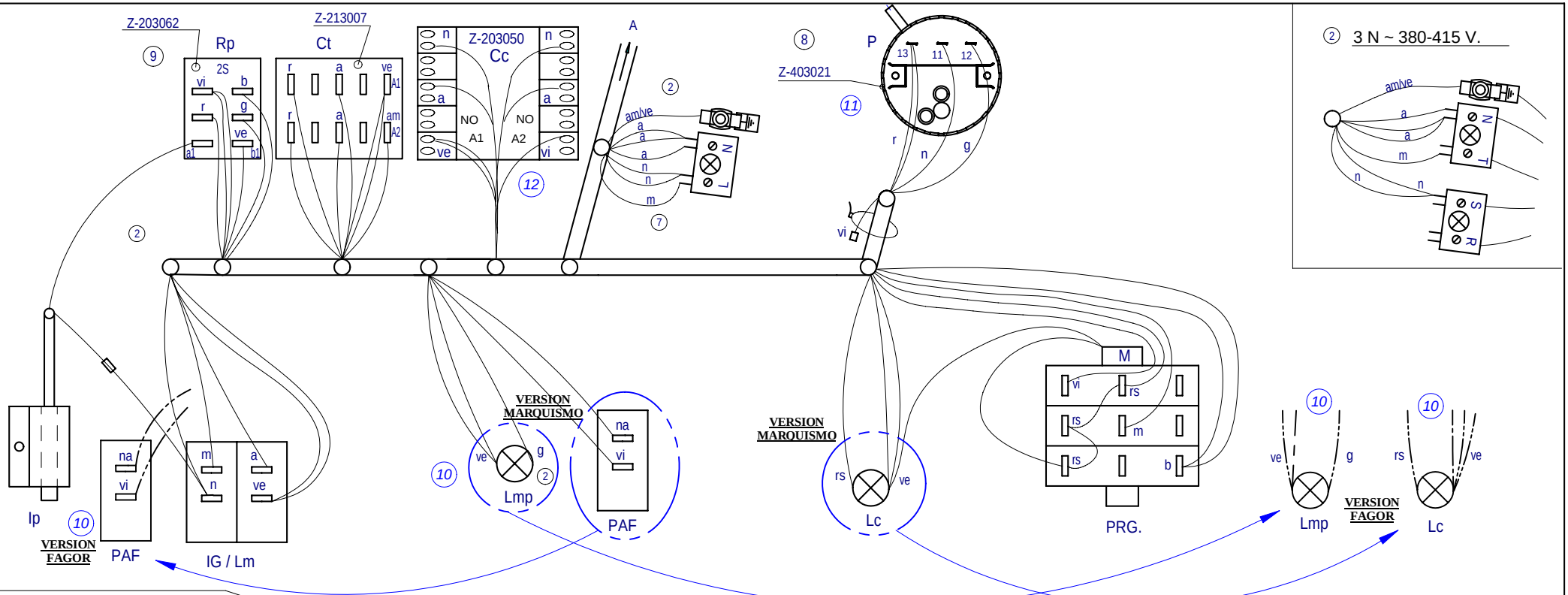


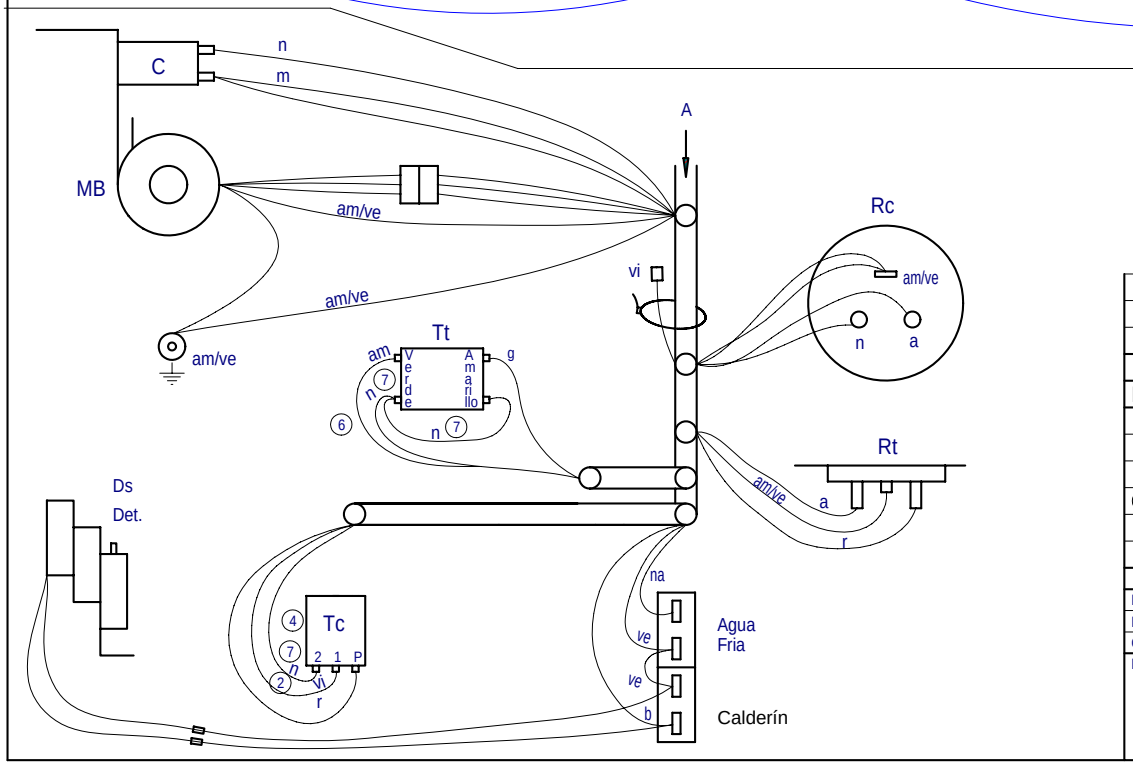


| | | | | | |
|---|---|---|---|---|---|
| | | | 5 | | |
| | Esquema de montaje LVR-14; LVC-15; LVR-20; LVC-21 | | Z-403035 | | |
| Nº | Pieza | | Nº Clasificacion | Acabado | |
| Nº | Modificacion | Propuesta de | Fecha | Tolerancias generales | |
| 7 | Pasar de color Naranja a Negro en Tc y Tt | I. Urisabel | 20-4-99 | | |
| 8 | Introducir presostato Z-403021 | J.M.P. | 19-10-99 | <5± | 50–100± : |
| 9 | Sustituir relé Z-203018 por Z-203062, cambiar colores en Rp | J.M.P.A. | 13-05-02 | 5–25± : | >100± |
| 10 | Correccion nueva estetica modelos Fagor | scaro | 2006-11-27 | 25–50± : | ∝± |
| 11 | Actualizar presostato por cambio proveedor | scaro | 2007-03-27 | | |
| 12 | Aldatu kalderineko kontaktorea Z213007 --> Z203050 | scaro | 2008-11-01 | | |

| | Firma | Fecha | | |
|---|---|---|---|---|
| Dibujado | S. N. | 19-10-94 | FAGOR | Mecanizado superficial |
| Proyectado | | | | |
| Comprobado | | | Fagor Industrial,Koop.Elk, Mugatua | |
| Escala | LAVAVASOS | | | Plano numero HC-16385 -12 |
| | Plano hau ez daiteke erabil ez berrizta gure baimenitz gabe | | | Sustituye al N° |
| | | | | Sustituido por |

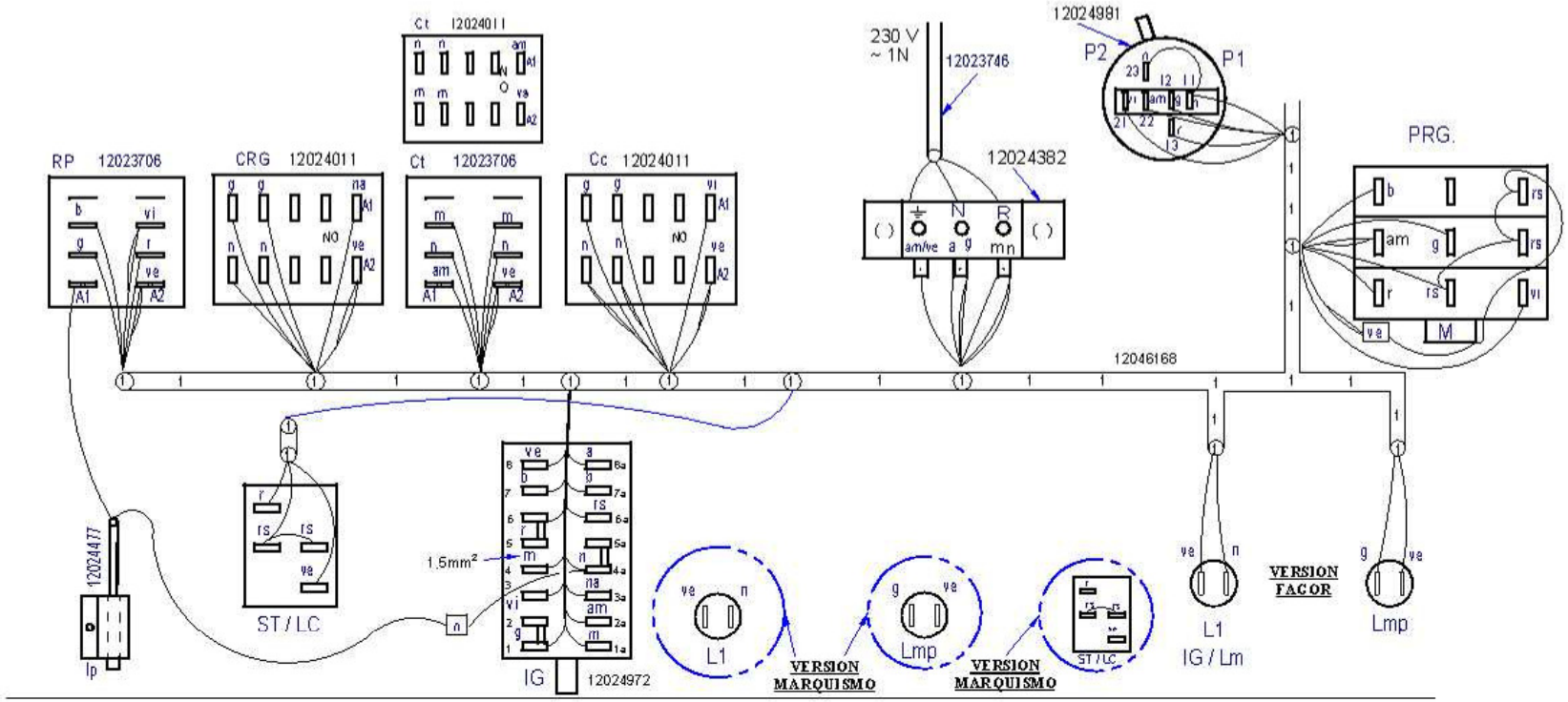


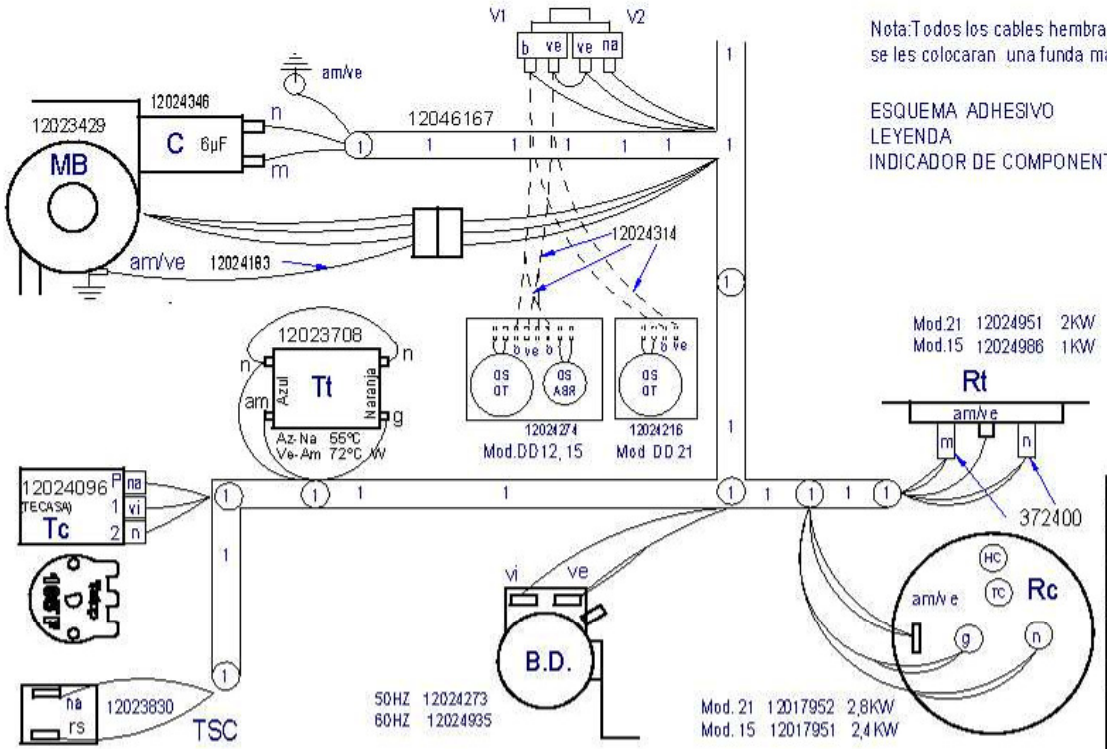


Nota:Todos los cables hembra que queden sin conectar se les colocaran una funda macho Q-578006

ESQUEMA ADHESIVO 12022114
LEYENDA 12022100
INDICADOR DE COMPONENTES Z713034000

| - | Plano Montaje LVC, 21, 15, B | - | 12046409 | | |
|---|---|---|---|---|---|
| Nº | TITLE | QTY | CODE | MATERIAL | TREATMENT |
| GENERAL TOLERANCES | ISO 2768-1 | Very Coarse | | | SHEET FORMAT: A3 |
| ISO 2768-2 | LAVAVASOS | | | | OESING CENTER: ONA |
| | | | | | MAT STATUS: 00 |
| | | | | | OOC STATUS: |
| | | | DESIGNED BY: M.MALLO | VALIDATED BY: JBUSTAGOYENA | DATE: 10 07 2012 |
| | | | | | SHEET: 1 / 1 |
| | | | | | SCALE: |

FAGOR
FAGOR INDUSTRIAL

12046409

REVISION

PROPOSED BY:

ISSUE DATE:

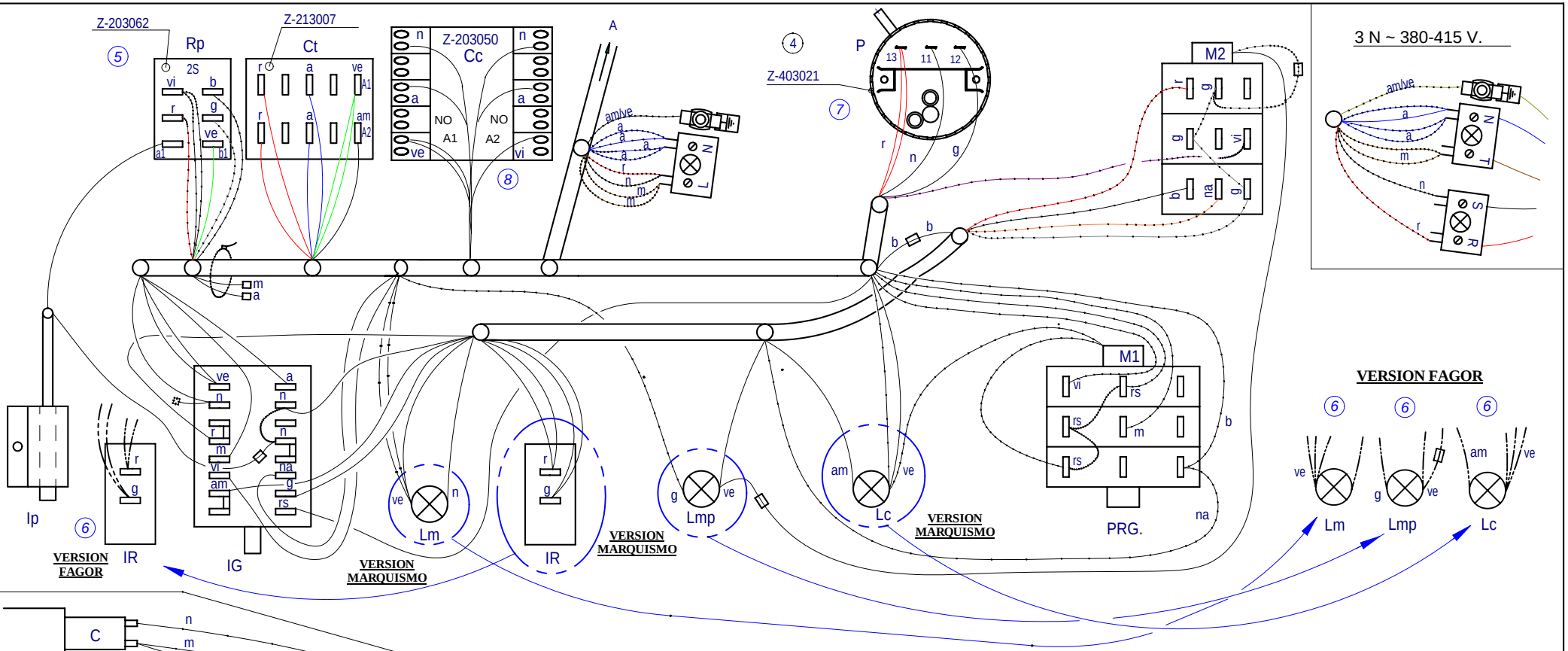


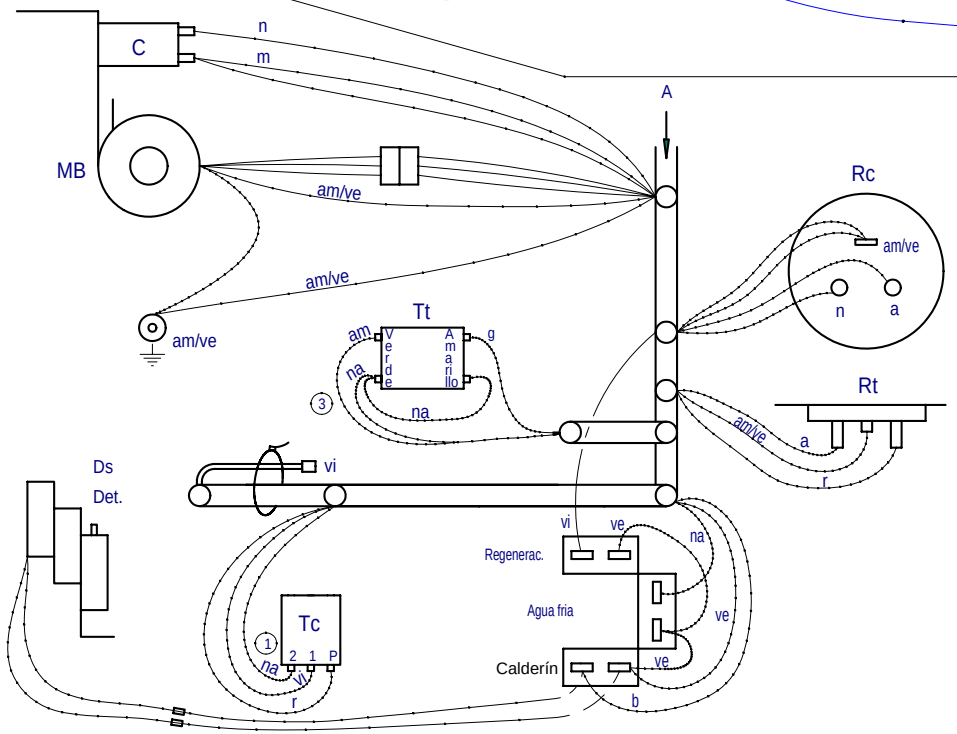


| | | | |
|---|---|---|---|
| | | ② | |
| | Esquema de montaje LVR-14D; LVC-15D; LVR-20D; LVC-21D | Z-473035 | |
| Nº | Pieza | N° Clasificación | |

| Nº | Modificacion | Propuesta de | Fecha |
|---|---|---|---|
| ④ | Sustituir presostato por Z-403021 | J.M.P. | 19-10-99 |
| ⑤ | Sustituir relé Z-203018 por Z-203062, cambiar colores en Rp | J.M.P.A. | 13-05-02 |
| ⑥ | Modificacion general por nueva estetica | scaro | 14-09-2005 |
| ⑦ | Actualizar presostato por cambio proveedor | scaro | 2007-03-27 |
| ⑧ | Aldatu kalderineko kontaktorea Z213007 --> Z203050 | scaro | 2008-11-01 |

Tolerancias generales

| | | | |
|---|---|---|---|
| < 5± | | 50–100± | : |
| 5–25± | : | > 100± | |
| 25–50± | : | ◯ ± | |

| | Firma | Fecha |
|---|---|---|
| Dibujado | S. N. | 5-2-96 |
| Proyectado | | |
| Comprobado | | |
| Escala | | |

FAGOR

Fagor Industrial,Koop.Elk, Mugatua

Mecanizado superficial

# LAVAVASOS

Plano hau ez daiteke erabili ez berrizta gure baimenitz gabe

Plano numero HC-16530 -8

Sustituye al N°

Sustituido por

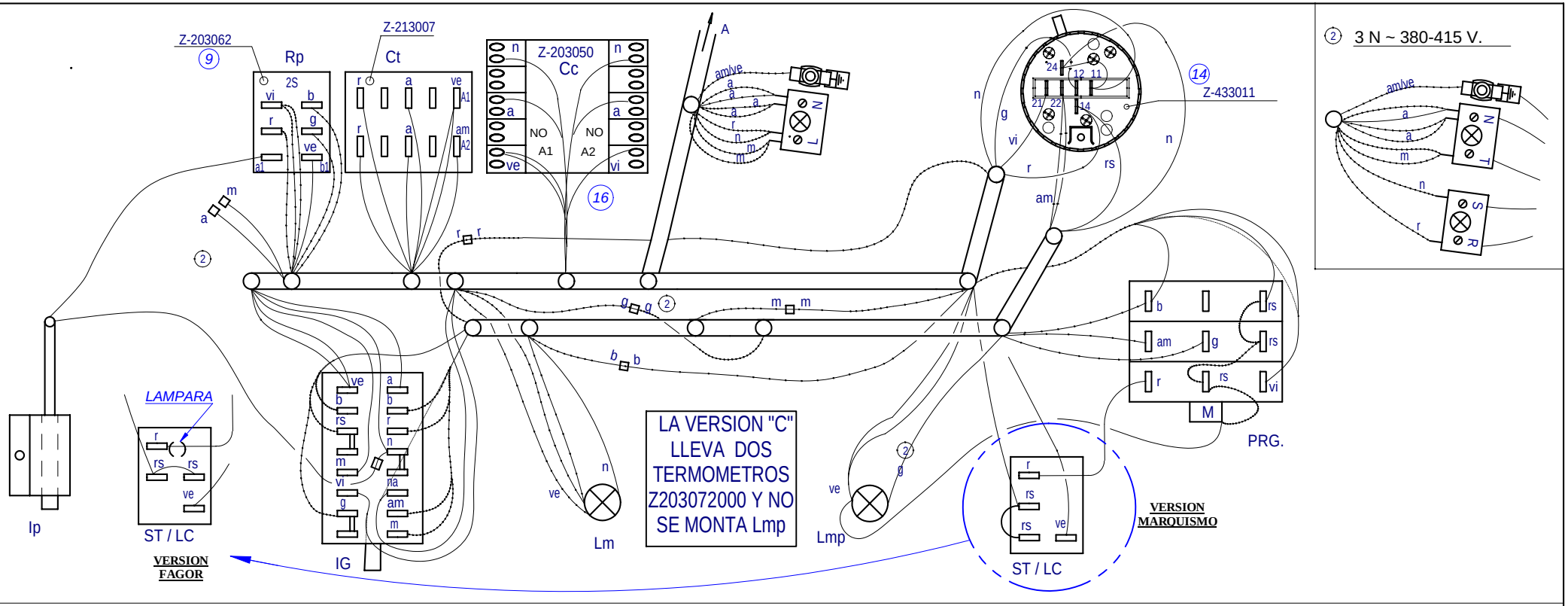


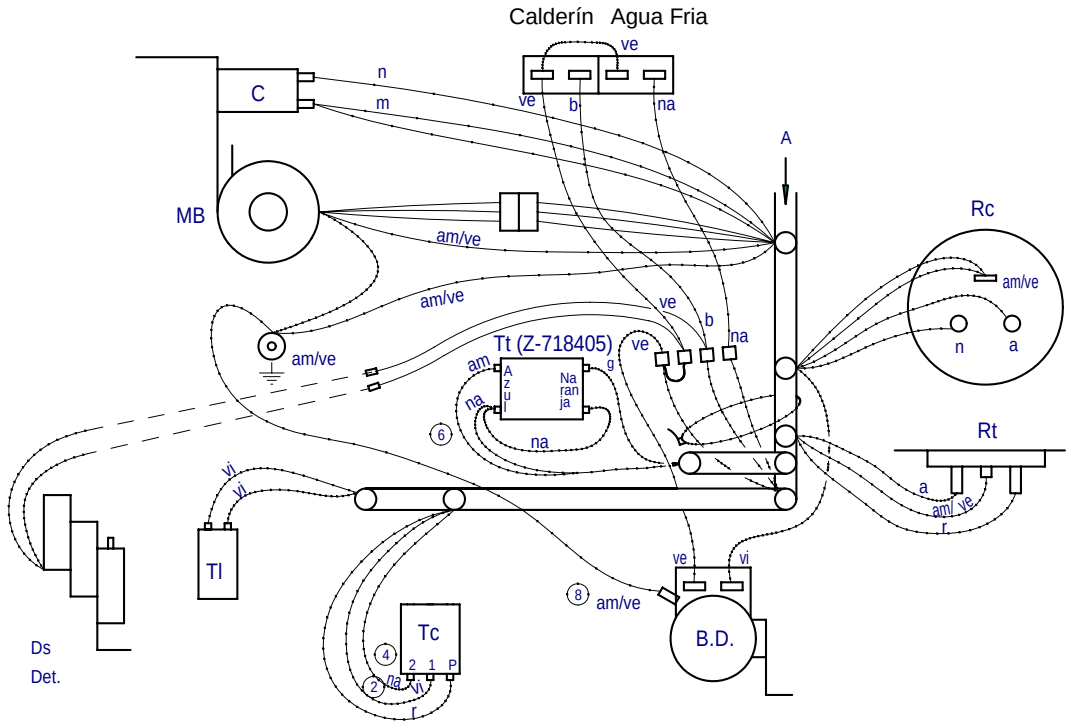


| | | | | | |
|---|---|---|---|---|---|
| | | | 5 | | |
| | Esquema de montaje LVR-20 B; LVC-21 B; LVC-21C | | Z-433035 | | |
| Nº | Pieza | Material | Nº Clasificacion | Acabado | |
| Nº | Modificacion | Propuesta de | Fecha | Tolerancias generales | |
| 11 | Modificar cableado para la nueva estetica | scaro | 13-09-2005 | | |
| 12 | Correccion nueva estetica | scaro | 2006-11-27 | <5± 50–100± : | |
| 13 | Eliminar version W del plano | scaro | 2007-01-09 | 5–25± : >100± | |
| 14 | Modificar cableado presostato debido a cambio por parte proveedor | scaro | 2007-03-21 | 25–50± : ∝± | |
| 15 | LVC-21C bertsioa sartu | scaro | 2008-03-14 | | |
| 16 | Aldatu kalderineko kontaktorea Z213007 --> Z203050 | scaro | 2008-11-01 | | |

| | Firma | Fecha | | |
|---|---|---|---|---|
| Dibujado | S. N. | 19-10-94 | FAGOR | Mecanizado superficial |
| Proyectado | | | | |
| Comprobado | | | Fagor Industrial,Koop.Elk, Mugatua | |
| Escala | | | LAVAVASOS | Plano numero HC-16383-16 |
| | | | Plano hau ez daiteke erabili ez berrizta gure baimenitz gabe | Sustituye al Nº |
| | | | | Sustituido por |

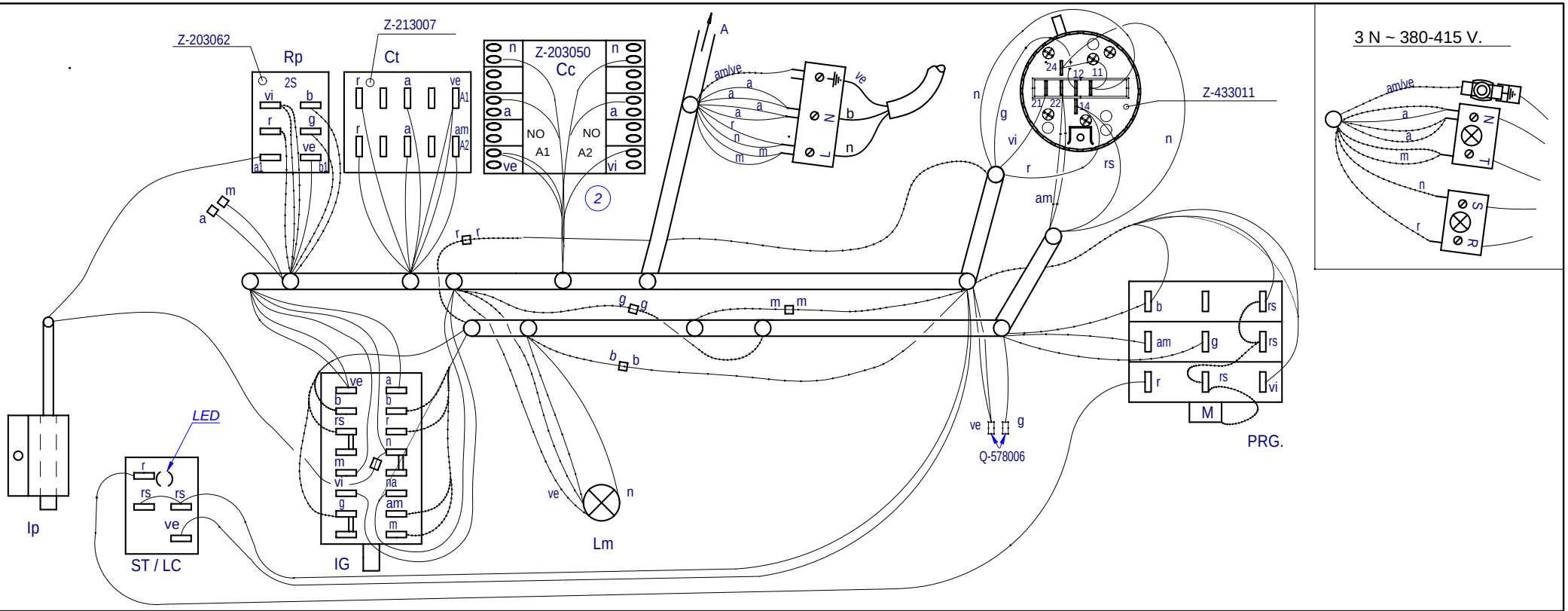


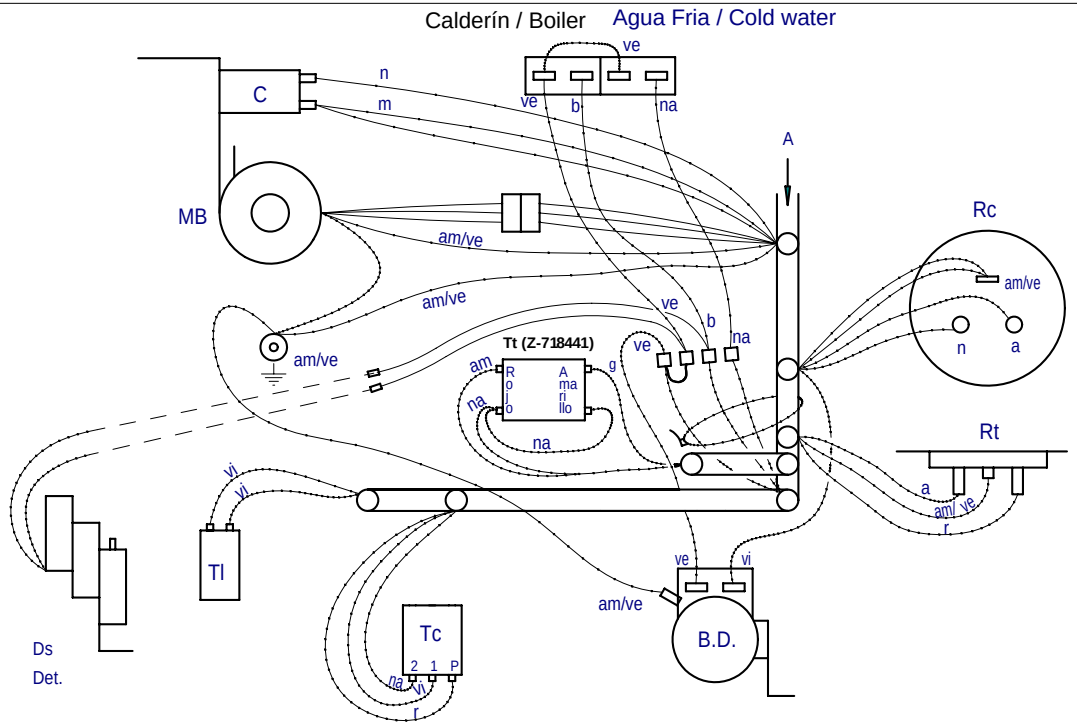


| | | | | | |
|---|---|---|---|---|---|
| - | **ESQUEMA MONTAJE LVC-21W** | - | - | **Z433036000** | - |
| Zk./Nº | Pieza | Cant. | Materiala/Material | Klas. zk/Nº Clas. | Gainazal akabera/Tratamiento |
| Zk./Nº | Aldaketa/Modificaciones | | Nork proposatua/Propuesta de | Data/Fecha | Perdoi orokorrak Tolerancias generales |
| 1 | **Modificar cableado presostato por cambio en presostato** | | **scaro** | **2007-03-21** | |
| 2 | **Aldatu kalderineko kontaktorea Z213007 --> Z203050** | | **scaro** | **2008-11-01** | < 5 ± 0.2 / 5 ÷ 25 ± 0.4 / 25 ÷ 50 ± 0.6 / 50 ÷ 100 ± 0.8 / >100 ± 1 / α ± 1 |
| - | - | | - | - | |
| - | - | | - | - | |
| - | - | | - | - | |

| | Sinadura/Firma | Data/Fecha |
|---|---|---|
| Marraztua/Dibujado | **S.N.** | **2006-12-20** |
| Proiektatua/Proyectado | - | - |
| Egiaztatua/Comprobado | **ENERITZ** | - |

FAGOR
Fagor Industrial,Koop.Elk, Mugatua

Gainazal perdoia Mecanizado superficial
—

Eskala/Escala
-

# LAVAVASOS

Plano Zk./Plano Nº
HC-18001 -01

Plano hau ezin daiteke erabili, ez berriztatu, gure baimenik gabe.

- Zk. ord. du
- Zk.gaitik ord.

# LV 2100 - B , VGL 10

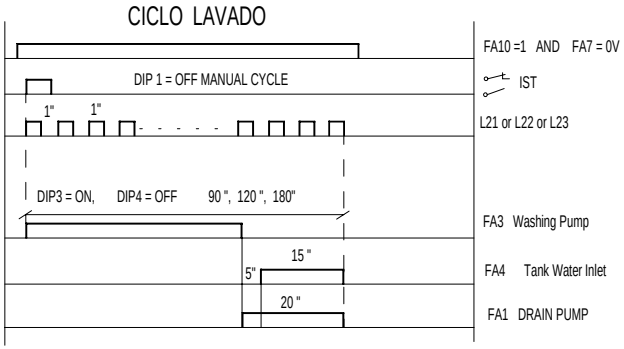


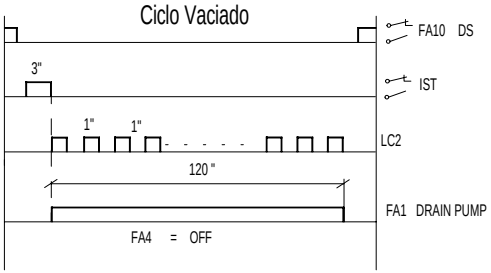


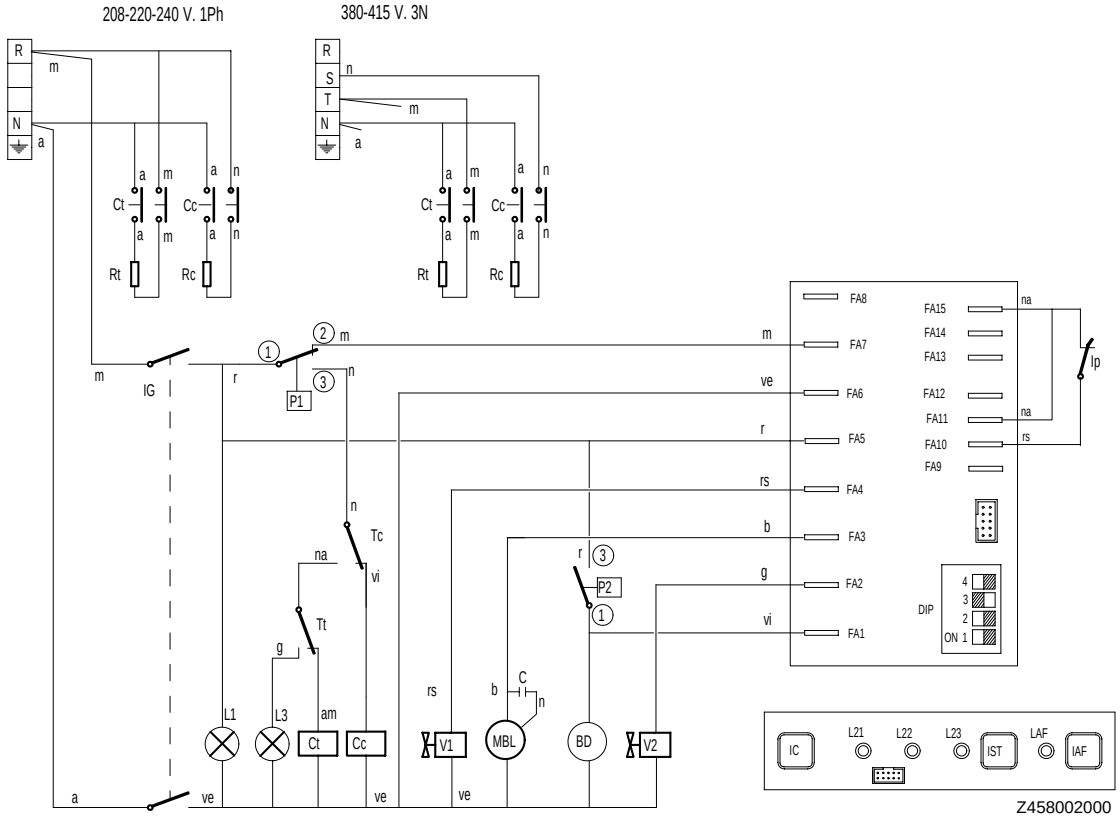


| | | | | | |
|---|---|---|---|---|---|
| - | Esquema teorico LV 2100 - B | - | - | Z458002000 | - |
| Zk./Nº | Pieza | Cant. | Materiala/Material | Klas. zk/Nº Clas. | Gainazal akabera/Tratamiento |
| Zk./Nº | Aldaketa/Modificaciones | | Nork proposatua/Propuesta de | Data/Fecha | Perdoi orokorrak Tolerancias generales |
| 1 | VGL 10 MODELOA SARTU | | rbenito | 2007-03-22 | |
| . | . | | . | . | < 5 ± 0.2 / 50 ÷ 100 ± 0.8 |
| . | . | | . | . | 5 ÷ 25 ± 0.4 / >100± 1 |
| . | . | | . | . | 25 ÷ 50 ± 0.6 / α ± 1 |
| . | . | | . | . | |

| | Sinadura/Firma | Data/Fecha |
|---|---|---|
| Marraztua/Dibujado | M.Maillo | 30-03-2006 |
| Proiektatua/Proyectado | M.Maillo | 30-03-2006 |
| Egiaztatua/Comprobado | ENERITZ | 30-03-2006 |

FAGOR
Fagor Industrial,Koop.Elk, Mugatua

Gainazal perdoia
Mecanizado superficial
–

Eskala/Escala
-

**LAVAVASOS**

Plano Zk./Plano Nº
HC - 17966 -1

Plano hau ezin daiteke erabili, ez berriztatu, gure baimenik gabe.

- Zk. ord. du
- Zk.gaitik ord.

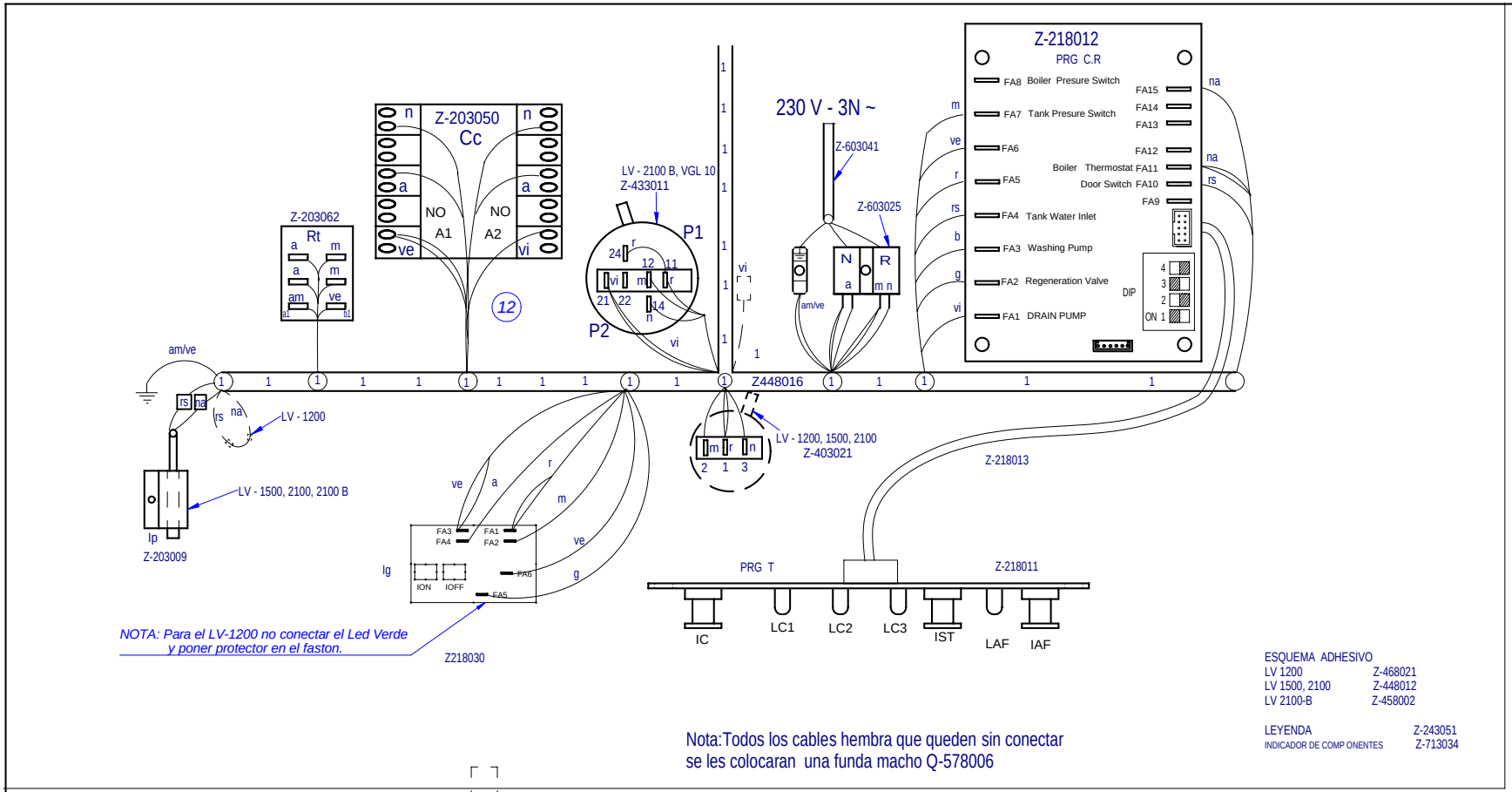


ESQUEMA ADHESIVO

| | |
|---|---|
| LV 1200 | Z-468021 |
| LV 1500, 2100 | Z-448012 |
| LV 2100-B | Z-458002 |

LEYENDA Z-243051
INDICADOR DE COMP ONENTES Z-713034

Nota:Todos los cables hembra que queden sin conectar
se les colocaran una funda macho Q-578006

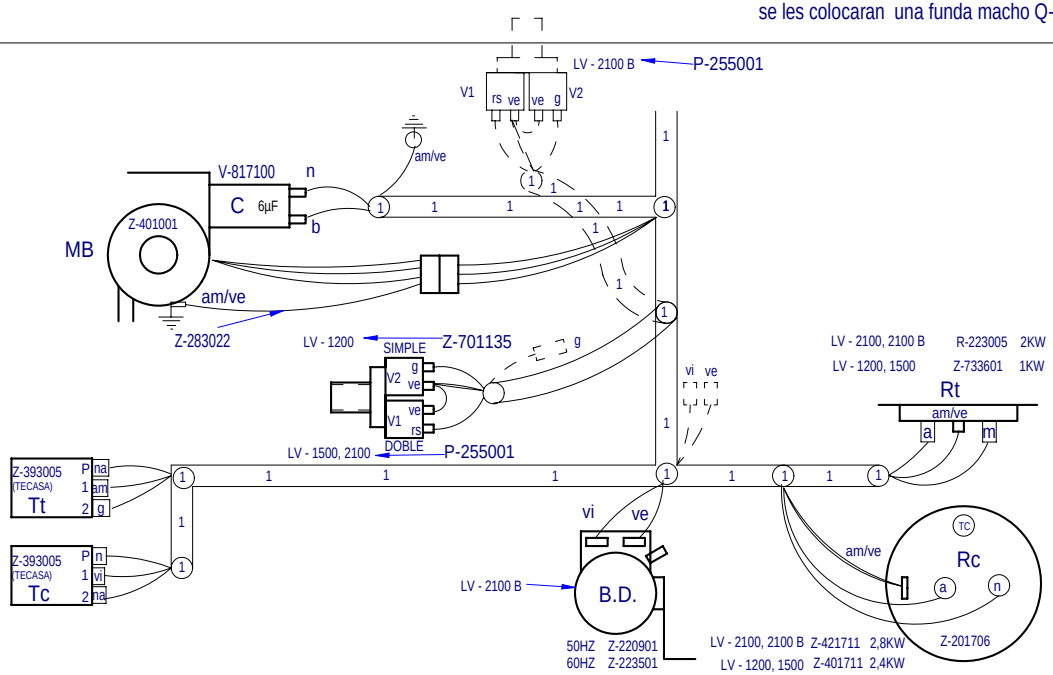


| | | | | | |
|---|---|---|---|---|---|
| | Plano montaje LV EDESA | | Z448017000 | | |
| Nº | Pieza | Material | Nº Clasificacion | Acabado | |
| Nº | Modificacion | Propuesta de | Fecha | Tolerancias generales | |
| 1 | Aldatu kalderineko kontaktorea Z213007 --> Z203050 | scaro | 2008-11-01 | <5± | 50–100± |
| | | | | 5–25± | >100± |
| | | | | 25–50± | ∝± |

| | Firma | Fecha |
|---|---|---|
| Dibujado | ecarrascal | 2007-11-27 |
| Proyectado | ecarrascal | 2007-11-27 |
| Comprobado | ENERITZ | 2007-11-27 |
| Escala | | |

FAGOR
Fagor Industrial,Koop.Elk, Mugatua

Mecanizado superficial

ONTZIGARBIGAILUAK

Plano hau ez daiteke erabil ez berrizta gure baimenitz gabe

Plano numero
HC-18101-01

Sustituye al N°

Sustituido por