DESPIECE TECNICO

# Cocinas eléctricas
# Electric ranges
# Fourneaux électriques
# Elektro-herde
# Cucine elettriche
# Fogões elétricos

## GAMA 700

## Modelos:

**CE7-20 Q**
**CE7-40 Q**
**CE7-41 Q**

***Enero 2010 January***

***Revisado Julio 2011 July Revised***

FAGOR

FAGOR INDUSTRIAL

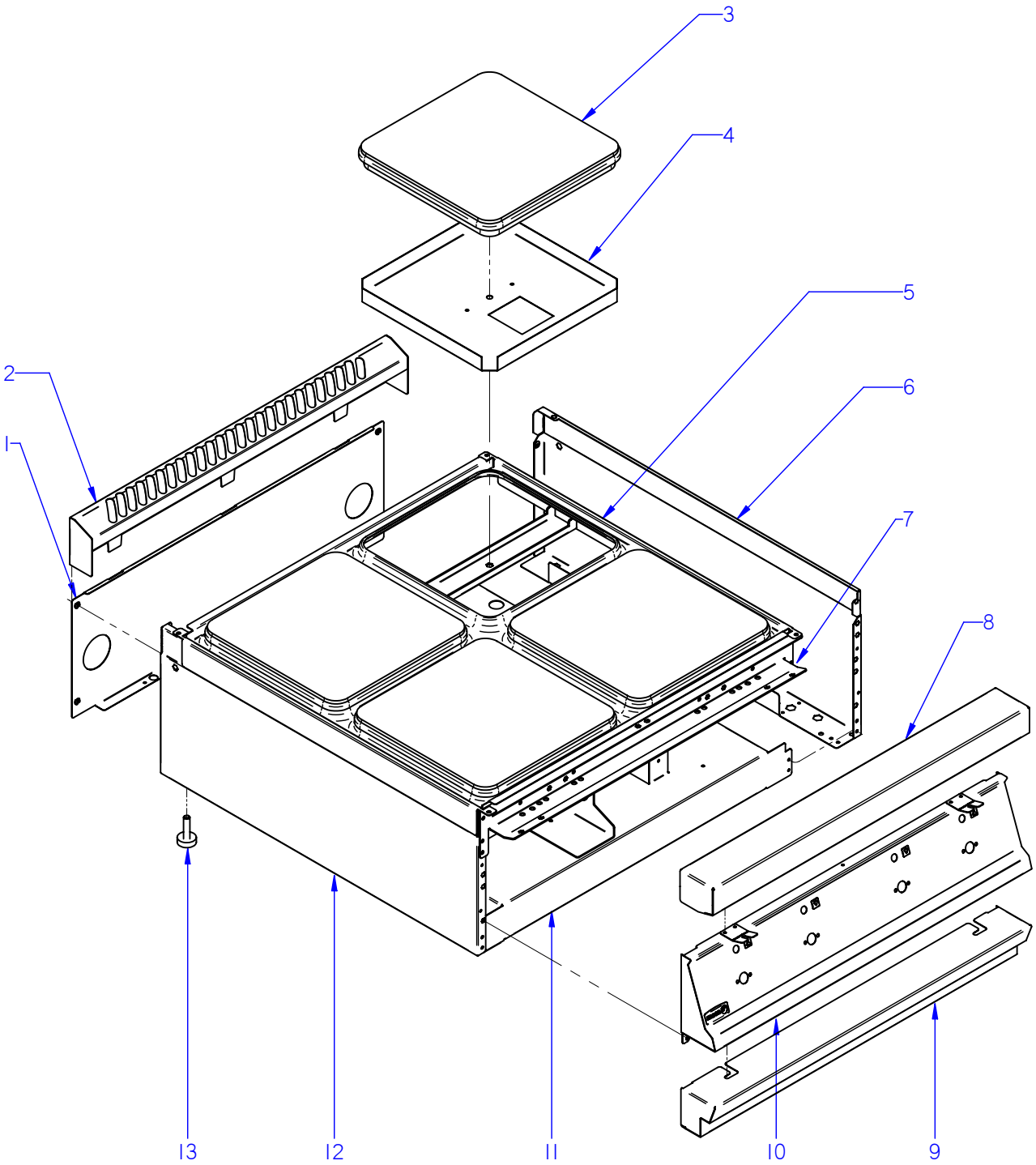


ITEM MARCADO EN COLOR = REPUESTO RECOMENDADO
COLOURED ITEM = RECOMMENDED SPARE PART

| N plano | Firma | Fecha | Aparato | MUEBLE / UNIT | Lamina | |
|---|---|---|---|---|---|---|
| C-2792 | | 2011-01 | COCINA CE7-20 Q / CE7-40 Q | | 1 | Fagor Industrial S.Coop. FAGOR Oñate |

| MOD. | COCINAS / RANGES | ZONA / ZONE | MUEBLE / UNIT | PLANO DIAGRAM | C-2792 |
|---|---|---|---|---|---|

| ITEM | CODIGO CODE | DENOMINACION | NAME | CE7-20-Q | CE7-40-Q | | | | | | NOTAS |
|---|---|---|---|---|---|---|---|---|---|---|---|
| 1 | H602804000 | PANEL POSTERIOR SU. G700 1/2M | SUP REAR PANEL G700 1/2M | 1 | _ | | | | | | |
| 1 | H602808000 | PANEL POSTERIOR SUP. G700 1M | SUP REAR PANEL G700 1M | _ | 1 | | | | | | |
| | Q419005000 | REMACHE 4X8 ALMG3 / ALUMINIO | RIVET 4X8 ALMG3 / ALUMINIUM | 4 | 4 | | | | | | |
| | Q042022000 | TORNILLO AVELLANADO M4X15 | COUNTERSUNK SCREW M4X15 | 1 | 1 | | | | | | |
| | X010503000 | CIERRE MUELLE | LOCK SPRING | 3 | 4 | | | | | | |
| | Q419007000 | REMACHE TUBULAR C/V D3.2X6 | TUBULAR RIVET C/V D3.2X6 | 6 | 8 | | | | | | |
| 2 | U955406000 | EMBELLECEDOR POSTERIO. 1/2M | REAR TRIM. 1/2M | 1 | _ | | | | | | |
| 2 | U955407000 | EMBELLECEDOR POSTERIOR 1M | REAR TRIM 1M | _ | 1 | | | | | | |
| 3 | U673011000 | PLACA 3000W-230V | PLATE 3000W-230V | 2 | 4 | | | | | | |
| 4 | U955408000 | CAZOLETA | CASING | 2 | 4 | | | | | | |
| | Q162050000 | TUERCA EXAGONAL M8X1 INOX | HEXAGONAL M8X1 INOX | 2 | 4 | | | | | | |
| | Q262050000 | ARANDELA GROW. A8 A.304 | WASHER GROW. A8 A.304 | 2 | 4 | | | | | | |
| | Q232050000 | ARANDELA A8 | WASHER A8 | 2 | 4 | | | | | | |
| 5 | U955404000 | MESA 1/2M CEQ7-41 | BENCH 1/2M CEQ7-41 | 1 | _ | | | | | | |
| 5 | U955405000 | MESA 1M CEQ7-41 | BENCH 1M CEQ7-41 | _ | 1 | | | | | | |
| | Q012031000 | TORNILLO EXAGONAL M5X10 A.304 | HEXAGONAL BOLT M5X10 A.304 | 4 | 4 | | | | | | |
| 6 | U952824000 | PANEL LATERAL SUP. DCHO. CEQ | RIGHT SUP. SIDE PANEL CEQ | 1 | 1 | | | | | | |
| | Q221342000 | REMACHE EXAGONAL M5 | HEXAGONAL RIVET M5 | 5 | 5 | | | | | | |
| | Q221343000 | REMACHE EXAGONAL M6 | HEXAGONAL RIVET M6 | 1 | 1 | | | | | | |
| | Q419005000 | REMACHE 4X8 ALMG3 / ALUMINIO | RIVET 4X8 ALMG3 / ALUMINIUM | 4 | 4 | | | | | | |
| 7 | H602602000 | ESCUADRA AMARRE ANTER. 1/2 M | FRONT FASTENING BRACKET 1/ | 1 | _ | | | | | | |
| 7 | H602603000 | ESCUADRA AMARRE ANTER. 1 M | FRONT FASTENING BRACKET 1 | _ | 1 | | | | | | |
| | Q221342000 | REMACHE EXAGONAL M5 | HEXAGONAL RIVET M5 | 6 | 6 | | | | | | |
| 8 | H125403000 | ANTERIOR MESA 1/2M G-700 | FRONT BENCH 1/2M G-700 | 1 | _ | | | | | | |
| 8 | H125409000 | ANTERIOR MESA 1M G-700 | FRONT BENCH 1M G-700 | _ | 1 | | | | | | |
| | Q152004000 | TORNIL. APLASTADO M5X13 A 304 | FLAT HEADED SCREW M5x13 A 3 | 2 | 2 | | | | | | |
| 9 | H602803000 | ZOCALO 7-05 Q | SKIRTING 7-05 Q | 1 | _ | | | | | | |
| 9 | H602816000 | ZOCALO 7-10 Q | SKIRTING 7-10 Q | _ | 1 | | | | | | |
| | Q012031000 | TORNILLO EXAGONAL M5X10 A.304 | HEXAGONAL BOLT M5X10 A.304 | 2 | 2 | | | | | | |
| | Q302022000 | ARANDELA 16X6X1.2 A.304 | WASHER 16X6X1.2 A.304 | 2 | 2 | | | | | | |
| | | | | | | | | | | | |

| MOD. | COCINAS / RANGES | ZONA / ZONE | MUEBLE / UNIT | PLANO DIAGRAM | C-2792 |
|---|---|---|---|---|---|

| ITEM | CODIGO CODE | DENOMINACION | NAME | CE7-20-Q | CE7-40-Q | | | | | | NOTAS |
|---|---|---|---|---|---|---|---|---|---|---|---|
| 10 | U952809000 | PORTAMANDOS COMPLE. CE7-20 | COMPL. CONTROL HOLDER CE7 | 1 | _ | | | | | | |
| 10 | U952805000 | PORTAMANDOS COMPLE. CE7-40 | COMPL. CONTROL HOLDER CE7 | _ | 1 | | | | | | |
| | Q221343000 | REMACHE EXAGONAL M6 | HEXAGONAL RIVET M6 | 6 | 6 | | | | | | |
| | Q151336000 | TORNILLO SOPORTE GUIAS | SCREW SUPPOR. GUIDELINES | 2 | 2 | | | | | | |
| | Q152004000 | TORNIL. APLASTADO M5X13 A 304 | FLAT HEADED SCREW M5x13 A 3 | 1 | 1 | | | | | | |
| | U912805000 | ESCUDO FAGOR G700 | FAGOR EMBLEM G700 | 1 | 1 | | | | | | |
| | Q221023000 | CLIP SUJECIÓN RÁPIDA Ø5 | RAPID CONNECT CLIP Ø5 | 2 | 2 | | | | | | |
| 11 | U952806000 | BASE CE7-20 | BASE CE7-20 | 1 | _ | | | | | | |
| 11 | U952803000 | BASE CE7-40 | BASE CE7-40 | _ | 1 | | | | | | |
| | Q221342000 | REMACHE EXAGONAL M5 | HEXAGONAL RIVET M5 | 4 | 4 | | | | | | |
| 12 | U952823000 | PANEL LATERAL SUPE IZDO. CEQ | LEFT UPPER SIDE PANEL CEQ | 1 | 1 | | | | | | |
| | Q221342000 | REMACHE EXAGONAL M5 | HEXAGONAL RIVET M5 | 5 | 5 | | | | | | |
| | Q221343000 | REMACHE EXAGONAL M6 | HEXAGONAL RIVET M6 | 1 | 1 | | | | | | |
| | Q419005000 | REMACHE 4X8 ALMG3 / ALUMINIO | RIVET 4X8 ALMG3 / ALUMINIUM | 4 | 4 | | | | | | |
| 13 | Z200107000 | PATA REGULABLE | ADJUSTABLE LEG | 4 | 4 | | | | | | |
| | Q221345000 | REMACHE EXAGONAL M10 | HEXAGONAL RIVET M10 | 4 | 4 | | | | | | |

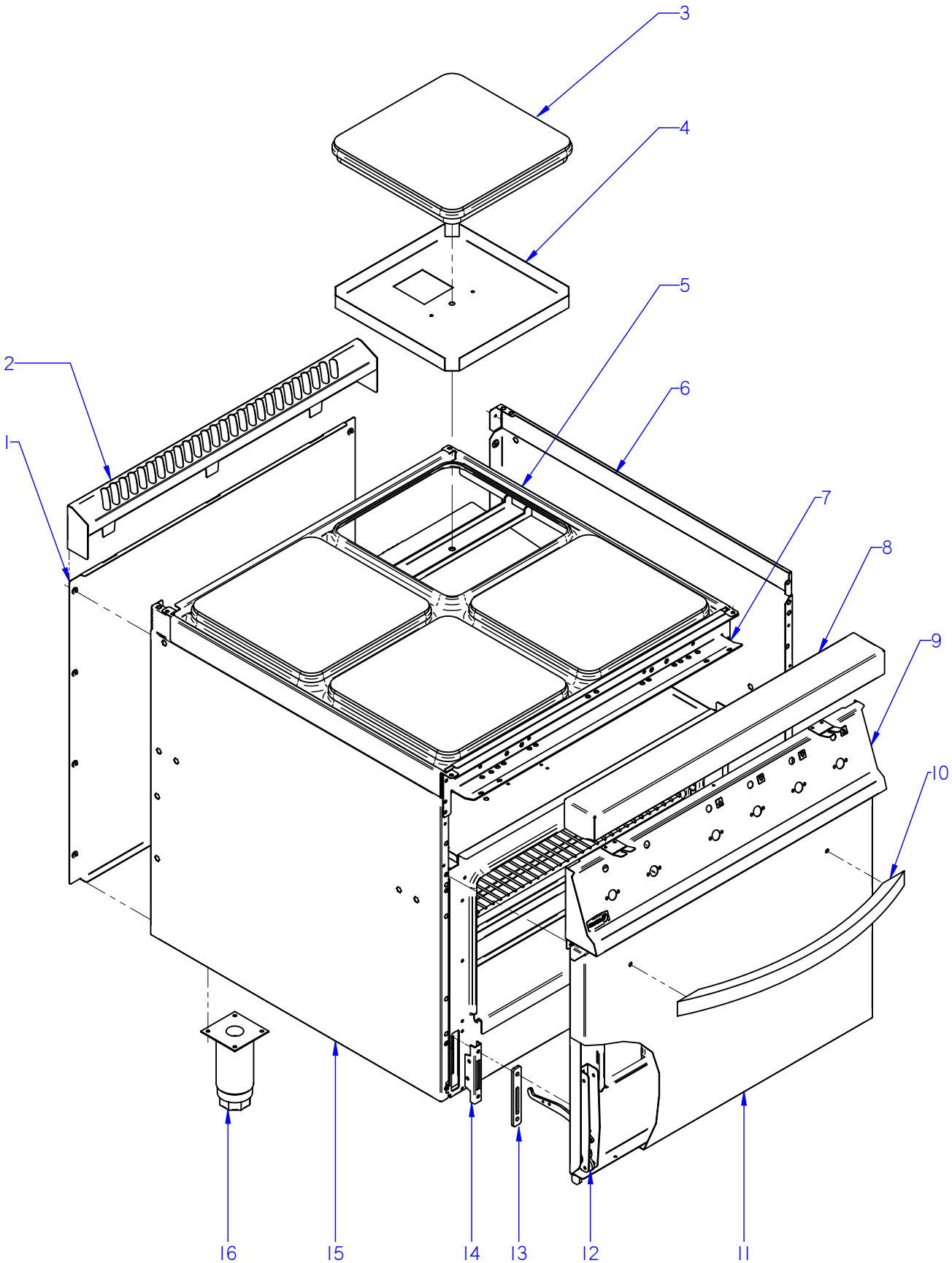


ITEM MARCADO EN COLOR = REPUESTO RECOMENDADO
COLOURED ITEM = RECOMMENDED SPARE PART

| N plano | Firma | Fecha | Aparato | MUEBLE / UNIT | Lamina | |
|---|---|---|---|---|---|---|
| C-2793 | | 2011-01 | COCINA CE7-41 Q | | 2 | Fagor Industrial S.Coop. FAGOR Oñate |

| MOD. | COCINAS / RANGES | ZONA / ZONE | MUEBLE / UNIT | PLANO DIAGRAM | C-2793 |
|---|---|---|---|---|---|

| ITEM | CODIGO CODE | DENOMINACION | NAME | CE7-41-Q | | | | | | | NOTAS |
|---|---|---|---|---|---|---|---|---|---|---|---|
| 1 | S562805000 | PANEL POSTERIOR G750 | REAR PANEL G750 | 1 | | | | | | | |
| | Q419005000 | REMACHE 4X8 ALMG3 / ALUMINIO | RIVET 4X8 ALMG3 / ALUMINIUM | 8 | | | | | | | |
| 2 | U955407000 | EMBELLECEDOR POSTERIOR 1M | REAR TRIM 1M | 1 | | | | | | | |
| 3 | U673011000 | PLACA 3000W-230V | PLATE 3000W-230V | 4 | | | | | | | |
| 4 | U955408000 | CAZOLETA | CASING | 4 | | | | | | | |
| | Q162050000 | TUERCA EXAGONAL M8X1 INOX | HEXAGONAL M8X1 INOX | 4 | | | | | | | |
| | Q262050000 | ARANDELA GROW. A8 A.304 | WASHER GROW. A8 A.304 | 4 | | | | | | | |
| | Q232050000 | ARANDELA A8 | WASHER A8 | 4 | | | | | | | |
| 5 | U955405000 | MESA 1M CEQ7-41 | BENCH 1M CEQ7-41 | 1 | | | | | | | |
| | Q012031000 | TORNILLO EXAGONAL M5X10 A.304 | HEXAGONAL BOLT M5X10 A.304 | 4 | | | | | | | |
| 6 | U952822000 | PANEL LATERAL DCHO. CEQ7-41 | RIGHT SIDE PANEL CEQ7-41 | 1 | | | | | | | |
| | Q221342000 | REMACHE EXAGONAL M5 | HEXAGONAL RIVET M5 | 13 | | | | | | | |
| | Q221343000 | REMACHE EXAGONAL M6 | HEXAGONAL RIVET M6 | 9 | | | | | | | |
| | Q012043000 | TORNILLO EXAGONAL M6X20 A.304 | HEXAGONAL BOLT M6X20 A.304 | 2 | | | | | | | |
| | Q302022000 | ARANDELA 16X6X1.2 A.304 | WASHER 16X6X1.2 A.304 | 2 | | | | | | | |
| 7 | H602603000 | ESCUADRA AMARRE ANTER. 1 M | FRONT FASTENING BRACKET 1 | 1 | | | | | | | |
| | Q221342000 | REMACHE EXAGONAL M5 | HEXAGONAL RIVET M5 | 16 | | | | | | | |
| | Q012031000 | TORNILLO EXAGONAL M5X10 A.304 | HEXAGONAL BOLT M5X10 A.304 | 6 | | | | | | | |
| 8 | H125409000 | ANTERIOR MESA 1M G-700 | FRONT BENCH 1M G-700 | 1 | | | | | | | |
| | Q152004000 | TORNIL. APLASTADO M5X13 A 304 | FLAT HEADED SCREW M5x13 A 3 | 2 | | | | | | | |
| 9 | U952802000 | PORTAMANDOS COMPLE. CE-741 | COMPL. CONTROL HOLDER CE-7 | 1 | | | | | | | |
| | Q152004000 | TORNIL. APLASTADO M5X13 A 304 | FLAT HEADED SCREW M5x13 A 3 | 4 | | | | | | | |
| | U912805000 | ESCUDO FAGOR G700 | FAGOR EMBLEM G700 | 1 | | | | | | | |
| | Q221023000 | CLIP SUJECIÓN RÁPIDA Ø5 | RAPID CONNECT CLIP Ø5 | 2 | | | | | | | |
| 10 | U020504000 | ASA DE HORNO COMPL. G 900 | COMPL. OVEN HANDLE G 900 | 1 | | | | | | | |
| | Q302022000 | ARANDELA 16X6X1.2 A.304 | WASHER 16X6X1.2 A.304 | 2 | | | | | | | |
| | Q012041000 | TORNILLO EXAGONAL M6X10 A.304 | HEXAGONAL BOLT M6X10 A.304 | 2 | | | | | | | |
| | Q302022000 | ARANDELA 16X6X1.2 A.304 | WASHER 16X6X1.2 A.304 | 2 | | | | | | | |
| 11 | U910501000 | PUERTA DE HORNO G700 | OVEN DOOR G700 | 1 | | | | | | | |
| | U910502000 | CONTRAPUERTA HORNO G700 | OVEN DOOR REVERSE G700 | 1 | | | | | | | |
| | | | | | | | | | | | |

| MOD. | COCINAS / RANGES | ZONA / ZONE | MUEBLE / UNIT | PLANO DIAGRAM | C-2793 |
|---|---|---|---|---|---|

| ITEM | CODIGO CODE | DENOMINACION | NAME | CE7-41-Q | | | | | | | NOTAS |
|---|---|---|---|---|---|---|---|---|---|---|---|
| 12 | U020528000 | BISAGRA CIERRE HORNO | OVEN LOCK HINGE | 2 | | | | | | | |
| | Q152022000 | TORNILLO M.6X8 | BOLT M.6X8 | 6 | | | | | | | |
| 13 | U915619000 | EMBELLECEDOR GUIA BISAGRA | HINGE GUIDE TRIM | 2 | | | | | | | |
| | Q152045000 | TORNILLO AMARRRE M6X25 | FASTENING BOLT M6X25 | 4 | | | | | | | |
| 14 | U010512000 | GUIA BISAGRA HORNO | OVEN HINGE GUIDE | 2 | | | | | | | |
| 15 | U952821000 | PANEL LATERAL IZDO. CEQ7-41 | LEFT SIDE PANEL CEQ7-41 | 1 | | | | | | | |
| | Q221342000 | REMACHE EXAGONAL M5 | HEXAGONAL RIVET M5 | 13 | | | | | | | |
| | Q221343000 | REMACHE EXAGONAL M6 | HEXAGONAL RIVET M6 | 2 | | | | | | | |
| | Q012043000 | TORNILL. EXAGONAL M6X20 A.304 | HEXAGONAL BOLT M6X10 A.304 | 2 | | | | | | | |
| | Q302022000 | ARANDELA 16X6X1.2 A.304 | WASHER 16X6X1.2 A.304 | 2 | | | | | | | |
| | Q221343000 | REMACHE EXAGONAL M6 | HEXAGONAL RIVET M6 | 7 | | | | | | | |
| 16 | X260151000 | PATA REGULABLE | ADJUSTABLE LEG | 4 | | | | | | | |
| | Q411304000 | REMACHE AVIBULB Ø 4,8 | AVIBULB RIVET Ø 4.8 | 16 | | | | | | | |

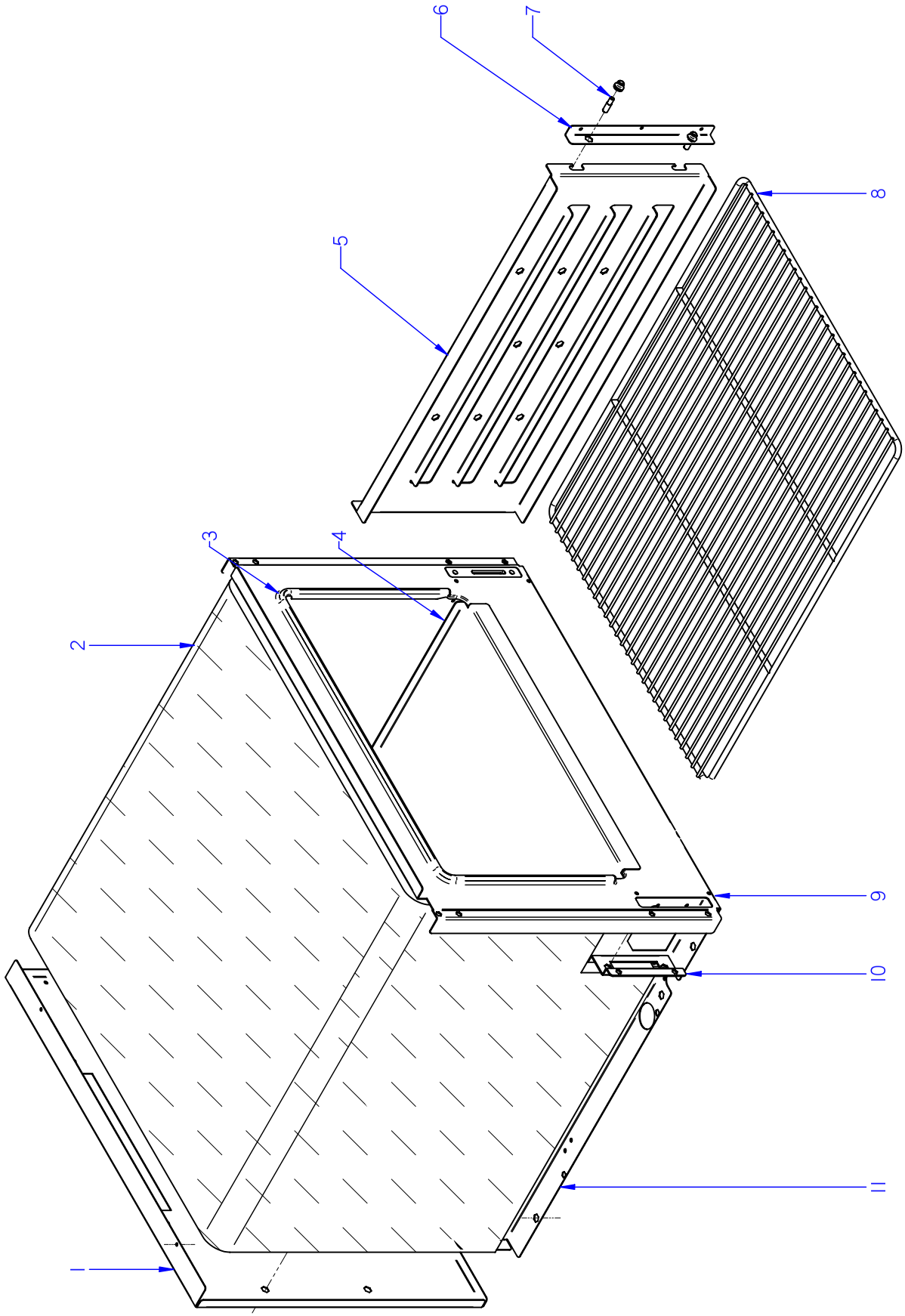


ITEM MARCADO EN COLOR = REPUESTO RECOMENDADO
COLOURED ITEM = RECOMMENDED SPARE PART

| N plano | Firma | Fecha | Aparato | | Lamina | |
|---|---|---|---|---|---|---|
| C-2794 | | 2011-01 | HORNO / OVENS<br>COCINA CE7-41 Q | | 3 | Fagor Industrial S.Coop.<br>Oñate FAGOR |

| MOD. | COCINAS / RANGES | ZONA / ZONE | HORNO / OVENS | PLANO DIAGRAM | C-2794 |
|---|---|---|---|---|---|

| ITEM | CODIGO CODE | DENOMINACION | NAME | CE7-41-Q | | | | | | | NOTAS |
|---|---|---|---|---|---|---|---|---|---|---|---|
| 1 | U955602000 | POSTERIOR HORNO ELECTRICO | ELECTRIC OVEN REAR | 1 | | | | | | | |
| 2 | U325621000 | AISLANTE 1455x670x20-AL1C | INSULATION 1455x670x20-AL1C | 1 | | | | | | | |
| 3 | U965613000 | JUNTA PUERTA FIBRA VIDRIO | GLASS FIBER DOOR SEAL | 1 | | | | | | | |
| 4 | U955613000 | SOLERA HORNO ELECTRICO G700 | ELECTRIC OVEN FLOOR G700 | 1 | | | | | | | |
| 5 | U915607000 | GUIA LATERAL HORNO G700 | OVEN SIDE GUIDE G700 | 2 | | | | | | | |
| 6 | U915616000 | SUPLEM. AMARRE GUIA LATERAL | SUPP. FASTENING SIDE GUIDE | 2 | | | | | | | |
| 7 | Q151336000 | TORNILLO SOPORTE GUIAS | GUIDE SUPPORT BOLT | 4 | | | | | | | |
| | Q221343000 | REMACHE EXAGONAL M6 | HEXAGONAL RIVET M6 | 4 | | | | | | | |
| 8 | U135642000 | PARRILLA DE HORNO | OVEN TRAY | 1 | | | | | | | |
| 9 | U965614000 | MARCO DE HORNO G900YG700 | OVEN FRAME G900YG700 | 1 | | | | | | | |
| | Q221304000 | REMACHE ROSCA NUTSERT M5 | THREADED RIVET NUTSERT M5 | 2 | | | | | | | |
| | Q412000000 | REMACHE TUBULAR 4 x 8 | TUBULAR RIVET 4 x 8 | 8 | | | | | | | |
| 10 | U915604000 | AMARRE GUIA BISAGRA HORNO | OVEN HINGE GUIDE FASTENING | 2 | | | | | | | |
| | Q412000000 | REMACHE TUBULAR 4 x 8 | TUBULAR RIVET 4 x 8 | 6 | | | | | | | |
| | Q222042000 | REMACHE EXAGONAL ROSCA M6 | HEXAGONAL RIVET THREAD M6 | 4 | | | | | | | |
| 11 | U955601000 | CUERPO HORNO ELECTR. G700 | ELECTR. OVEN BODY G700 | 1 | | | | | | | ELIMINADO 03.01.11 |
| 11 | U965616000 | CUERPO HORNO ELECTR. AD | ELECTR. OVEN BODY AD | 1 | | | | | | | INTRODUCIDO 03.01.11 |
| | | | | | | | | | | | |
| | | | | | | | | | | | |
| | | | | | | | | | | | |
| | | | | | | | | | | | |
| | | | | | | | | | | | |
| | | | | | | | | | | | |
| | | | | | | | | | | | |
| | | | | | | | | | | | |
| | | | | | | | | | | | |
| | | | | | | | | | | | |
| | | | | | | | | | | | |
| | | | | | | | | | | | |
| | | | | | | | | | | | |
| | | | | | | | | | | | |

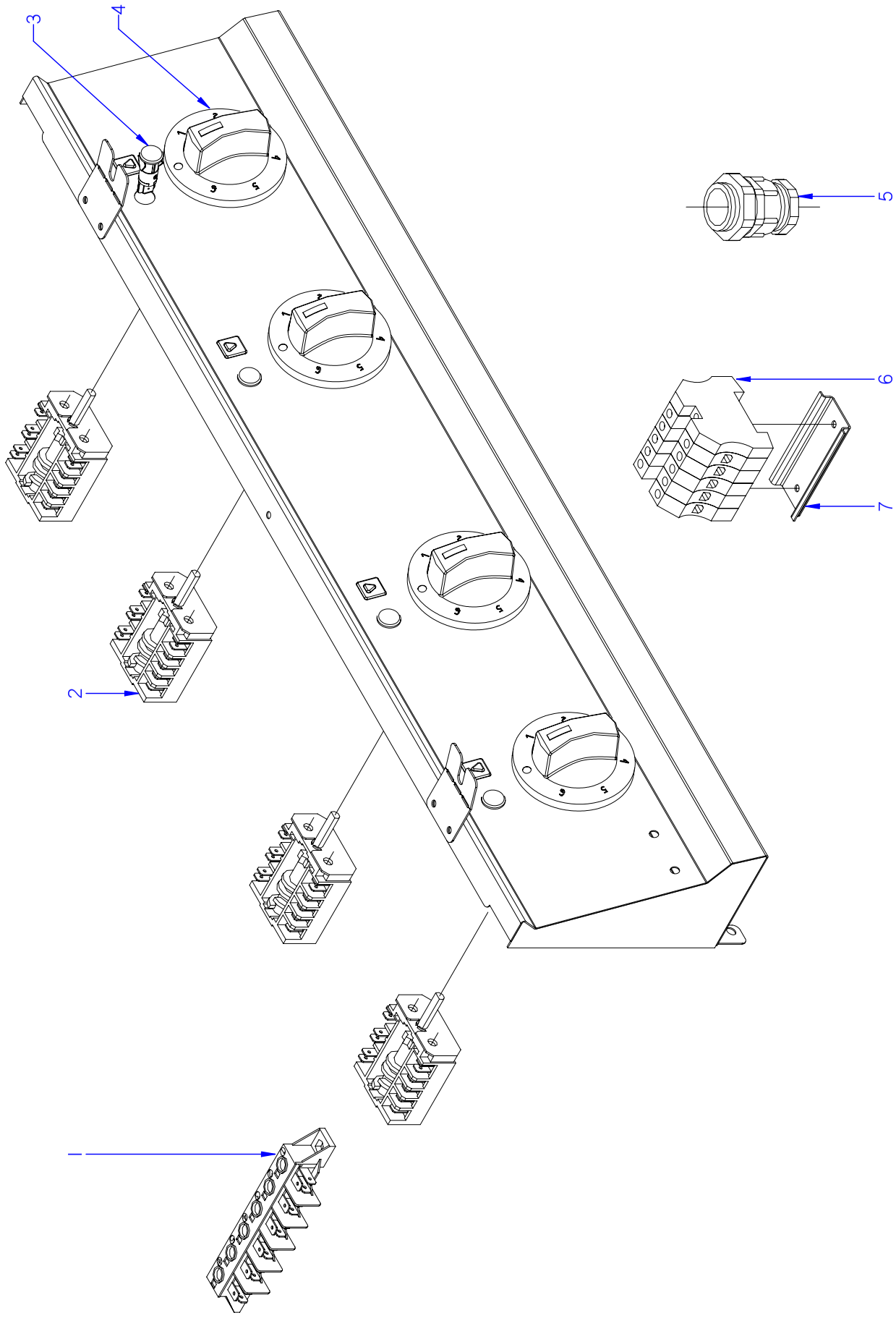


ITEM MARCADO EN COLOR = REPUESTO RECOMENDADO
COLOURED ITEM = RECOMMENDED SPARE PART

| N plano | Firma | Fecha | Aparato | Lamina |
|---|---|---|---|---|
| C-2795 | | 2011-01 | PARTE FUNCIONAL ELECTRICA / ELECTRIC FUNCTIONAL PART<br>COCINA CE7-20 Q / CE7-40 Q | 4 |

Fagor Industrial S.Coop.
Oñate

| MOD. | COCINAS / RANGES | ZONA / ZONE | PARTE FUNCIONAL ELECTRICA<br>ELECTRIC FUNCTIONAL PART | PLANO<br>DIAGRAM | C-2795 |
|---|---|---|---|---|---|

| ITEM | CODIGO<br>CODE | DENOMINACION | NAME | CE7-20-Q | CE7-40-Q | | | | | | NOTAS |
|---|---|---|---|---|---|---|---|---|---|---|---|
| 1 | R253044000 | REGLETA AUXILIAR FV-122 | AUXILIARY TERMINAL STRIP FV- | 1 | 1 | | | | | | |
| | Q152004000 | TORNIL. APLASTADO M5X13 A 304 | FLAT HEADED SCREW M5x13 A 3 | 2 | 2 | | | | | | |
| 2 | U673007000 | CONMUTADOR EGO | EGO SWITCH | 2 | 4 | | | | | | |
| | Q151320000 | TOR. ALOMADO M4X6 H.ZINCADO | CURVED SCREW M4X6 H. ZINC | 4 | 8 | | | | | | |
| 3 | R693056000 | PILOTO AMBAR 41227000A4 | AMBER PILOT 41227000A4 | 2 | 4 | | | | | | |
| 4 | U952101000 | MANDO Ø6 (CONMUTADOR-MESA) | CONTROL Ø6 (SWITCH-BENCH) | 2 | 4 | | | | | | |
| 5 | R023013000 | PRENSA ESTOPAS PG-21 | STUFFING BOX PG-21 | 1 | 1 | | | | | | |
| 6 | P453025000 | BORNES 10 WDU-10203.O | TERMINALS 10 WDU-10203.O | 3 | 3 | | | | | | |
| | P453026000 | BORNE TIER 10 WPE-10103.O | TERMINAL TIER 10 WPE-10103.O | 1 | 1 | | | | | | |
| | Z263302000 | BORNA AZUL PASO | BLUE THROUGH TERMINAL | 1 | 1 | | | | | | |
| | Z263303000 | TOPE FINAL | END STOP | 1 | 1 | | | | | | |
| | Z683068000 | SEÑALIZ.DEK-6WEIDMULLER | SIGNS DEK-6WEIDMULLER | 1 | 1 | | | | | | |
| 7 | Z103083000 | GUIA CONTACTOR L-73 " | CONTACTOR GUIDE L-73 " | 1 | 1 | | | | | | |
| | Q419005000 | REMACHE 4X8 ALMG3 / ALUMINIO | RIVET 4X8 ALMG3 / ALUMINIUM | 2 | 2 | | | | | | |

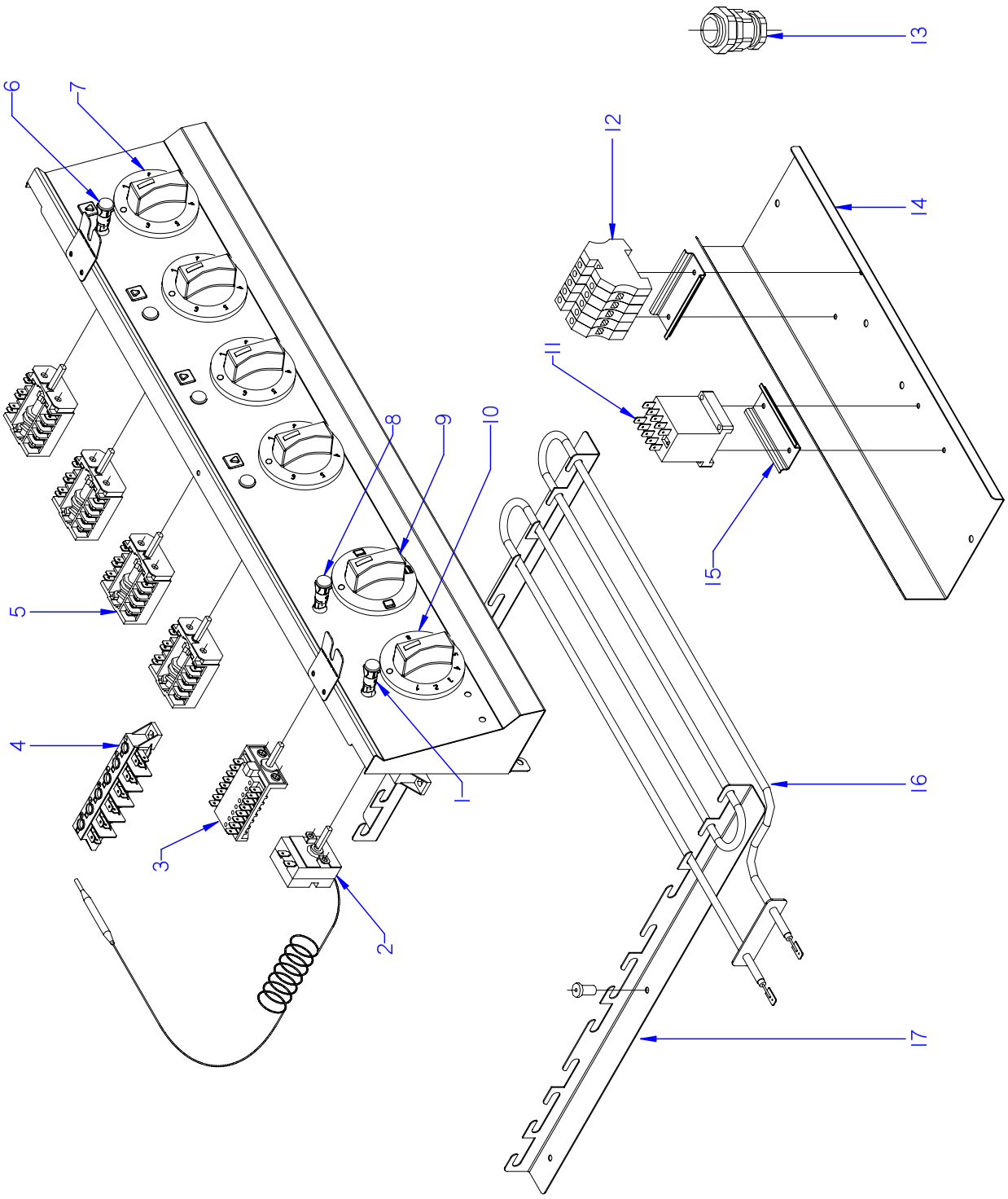


ITEM MARCADO EN COLOR = REPUESTO RECOMENDADO
COLOURED ITEM = RECOMMENDED SPARE PART

| N plano | Firma | Fecha | Aparato | Lamina | |
|---|---|---|---|---|---|
| C-2796 | | 2011-01 | PARTE FUNCIONAL ELECTRICA / ELECTRIC FUNCTIONAL PART<br>COCINA CE7-41 Q | 5 | Fagor Industrial S.Coop.<br>Oñate |

| MOD. | COCINAS / RANGES | ZONA / ZONE | PARTE FUNCIONAL ELECTRICA<br>ELECTRIC FUNCTIONAL PART | PLANO<br>DIAGRAM | C-2796 |
|---|---|---|---|---|---|

| ITEM | CODIGO<br>CODE | DENOMINACION | NAME | CE7-41-Q | | | | | | | NOTAS |
|---|---|---|---|---|---|---|---|---|---|---|---|
| 1 | R693056000 | PILOTO AMBAR 41227000A4 | AMBER PILOT 41227000A4 | 1 | | | | | | | |
| 2 | X153000000 | TERMOSTATO 50-310 C | THERMOSTAT 50-310 C | 1 | | | | | | | |
| | Q151320000 | TOR. ALOMADO M4X6 H.ZINCADO | CURVED SCREW M4X6 H. ZINC | 2 | | | | | | | |
| 3 | U673006000 | CONMUTADOR | SWITCH | 1 | | | | | | | |
| | Q151320000 | TOR. ALOMADO M4X6 H.ZINCADO | CURVED SCREW M4X6 H. ZINC | 2 | | | | | | | |
| 4 | R253044000 | REGLETA AUXILIAR FV-122 | AUXILIARY TERMINAL STRIP FV- | 1 | | | | | | | |
| | Q152004000 | TORNIL. APLASTADO M5X13 A 304 | FLAT HEADED SCREW M5x13 A 3 | 2 | | | | | | | |
| 5 | U673007000 | CONMUTADOR EGO | EGO SWITCH | 4 | | | | | | | |
| | Q151320000 | TOR. ALOMADO M4X6 H.ZINCADO | CURVED SCREW M4X6 H. ZINC | 8 | | | | | | | |
| 6 | R693056000 | PILOTO AMBAR 41227000A4 | AMBER PILOT 41227000A4 | 4 | | | | | | | |
| 7 | U952101000 | MANDO Ø6 (CONMUTADOR-MESA) | CONTROL Ø6 (SWITCH-BENCH) | 4 | | | | | | | |
| 8 | R693055000 | PILOTO VERDE 41227000C7 | GREEN PILOT 41227000C7 | 1 | | | | | | | |
| 9 | U952102000 | MANDO Ø6 (CONMUTAD.-HORNO) | CONTROL Ø6 (SWITCH-OVEN) | 1 | | | | | | | |
| 10 | X482101000 | MANDO Ø6 (TERMOSTAO-HORNO) | CONTROL Ø6 (THERMOSTAT -OV | 1 | | | | | | | |
| 11 | Z213007000 | CONTACTOR 230 V. 50-60 HZ | CONTACTOR 230 V. 50-60 HZ | 1 | | | | | | | |
| 12 | R263003000 | BORNA PASO 35MM | TAP TERMINAL 35MM | 3 | | | | | | | |
| | Z103035000 | BORNE TIERRA 35MM | EARTH TERMINAL 35MM | 1 | | | | | | | |
| | R673010000 | BORNA PASO AZUL 35MM | BLUE TAP TERMINAL 35MM | 1 | | | | | | | |
| | Z683096000 | TOPE FINAL WEW35 10590.0 | END STOP WEW35 10590.0 | 1 | | | | | | | |
| | Z683068000 | SEÑALIZ.DEK-6WEIDMULLER | SIGNS DEK-6WEIDMULLER | 1 | | | | | | | |
| 13 | R023013000 | PRENSA ESTOPAS PG-21 | STUFFING BOX PG-21 | 1 | | | | | | | |
| 14 | U953001000 | CHAPA AMAR CONTACT. HORNO | CONTACT. FASTE. PLATE OVEN | 1 | | | | | | | |
| | Q152004000 | TORNIL. APLASTADO M5X13 A 304 | FLAT HEADED SCREW M5x13 A 3 | 3 | | | | | | | |
| 15 | Z103083000 | GUIA CONTACTOR L-73 " | CONTACTOR GUIDE L-73 " | 2 | | | | | | | |
| | Q419005000 | REMACHE 4X8 ALMG3 / ALUMINIO | RIVET 4X8 ALMG3 / ALUMINIUM | 4 | | | | | | | |
| 16 | U803004000 | RESISTENCIA 1000W-230V | RESISTOR 1000W -230V | 6 | | | | | | | |
| 17 | U805613000 | ESCUADRA SOPOR. RESISTENCIAS | SUPP. BRACKET RESISTORS | 4 | | | | | | | |
| | Q419005000 | REMACHE 4X8 ALMG3 / ALUMINIO | RIVET 4X8 ALMG3 / ALUMINIUM | 12 | | | | | | | |
| | | | | | | | | | | | |
| | | | | | | | | | | | |
| | | | | | | | | | | | |

| MOD. | COCINAS / RANGES | ZONA / ZONE | VARIOS / MISCELLANEOUS | PLANO DIAGRAM | |
|---|---|---|---|---|---|

| ITEM | CODIGO CODE | DENOMINACION | NAME | CE7-20-Q | CE7-40-Q | CE7-41-Q | | | | | NOTAS |
|---|---|---|---|---|---|---|---|---|---|---|---|
| | U176501000 | FOLLETO INSTRUCCIÓN. CE-700 | INSTRUCTION LEAFLET. CE-700 | 1 | 1 | 1 | | | | | |
| | U653003000 | CABLEADO PORTAM. MESA | CONTROL HOLDER WIRING TAB | 1 | _ | _ | | | | | |
| | U673009000 | CABLEADO BORNAS A CONMUT. | TERMINAL WIRING TO SWITCH | _ | 1 | 1 | | | | | |
| | U673014000 | CABLEADO A PLACA | WIRING TO PLATE | 2 | 4 | 4 | | | | | |
| | U803007000 | CABLEADO HORNO CE-741 | OVEN WIRING CE-741 | _ | _ | 1 | | | | | |
| | U803008000 | CABLEADO AUXILIAR CE-741 | AUX. WIRING CE-741 | _ | _ | 1 | | | | | |
| | U803005000 | PLANO DE MONTAJE ELECTRICO | ELECTRICAL ASSEMBLY PLAN | 1 | 1 | 1 | | | | | HC-72832 |
| | U653001000 | ESQUEMA TEORICO ADHESIVO | THEOR. DIAGRAM LABEL | 1 | _ | _ | | | | | HC-72730 |
| | U663000000 | ESQUEMA TEORICO ADHESIVO | THEOR. DIAGRAM LABEL | _ | 1 | _ | | | | | HC-72734 |
| | U673001000 | ESQUEMA TEORICO ADHESIVO | THEOR. DIAGRAM LABEL | _ | _ | 1 | | | | | HC-71190 |

| MOD. | COCINAS / RANGES | ZONA / ZONE | PIEZAS ESPECIF. PARA DISTINTOS VOLTAJES<br>SPECIFIC PARTS FOR DIFFERENT VOLTAGES | PLANO<br>DIAGRAM | |
|---|---|---|---|---|---|

| ITEM | CODIGO<br>CODE | DENOMINACION | NAME | CE7-20-Q | CE7-40-Q | CE7-41-Q | | | | | |
|---|---|---|---|---|---|---|---|---|---|---|---|
| | | **VERSION: 380 / 415 V** | | | | | | | | | |
| 3 | U673011000 | PLACA 3000W-230V | PLATE 3000W-230V | 2 | 4 | 4 | | | | | |
| | | | | | | | | | | | |
| | | | | | | | | | | | |
| | | | | | | | | | | | |
| | | | | | | | | | | | |
| | | | | | | | | | | | |
| | | | | | | | | | | | |
| | | | | | | | | | | | |
| | | | | | | | | | | | |
| | | | | | | | | | | | |
| | | | | | | | | | | | |
| | | | | | | | | | | | |
| | | **VERSION: 440 V 3** | | | | | | | | | |
| 3 | U673012000 | PLACA 3000W-400V | PLATE 3000W-400V | 2 | 4 | 4 | | | | | |
| S/Nº | U803072000 | RESISTENCIA 150K 1/4W | RESISTOR 150K 1/4W | 2 | 4 | 6 | | | | | |
| S/Nº | U803073000 | RESISTENCIA 8K2 6W | RESISTOR 8K2 6W | _ | _ | 1 | | | | | |
| | | | | | | | | | | | |
| | | | | | | | | | | | |
| | | | | | | | | | | | |
| | | | | | | | | | | | |
| | | | | | | | | | | | |
| | | | | | | | | | | | |
| | | | | | | | | | | | |
| | | | | | | | | | | | |
| | | | | | | | | | | | |
| | | | | | | | | | | | |
| | | | | | | | | | | | |
| | | | | | | | | | | | |
| | | | | | | | | | | | |

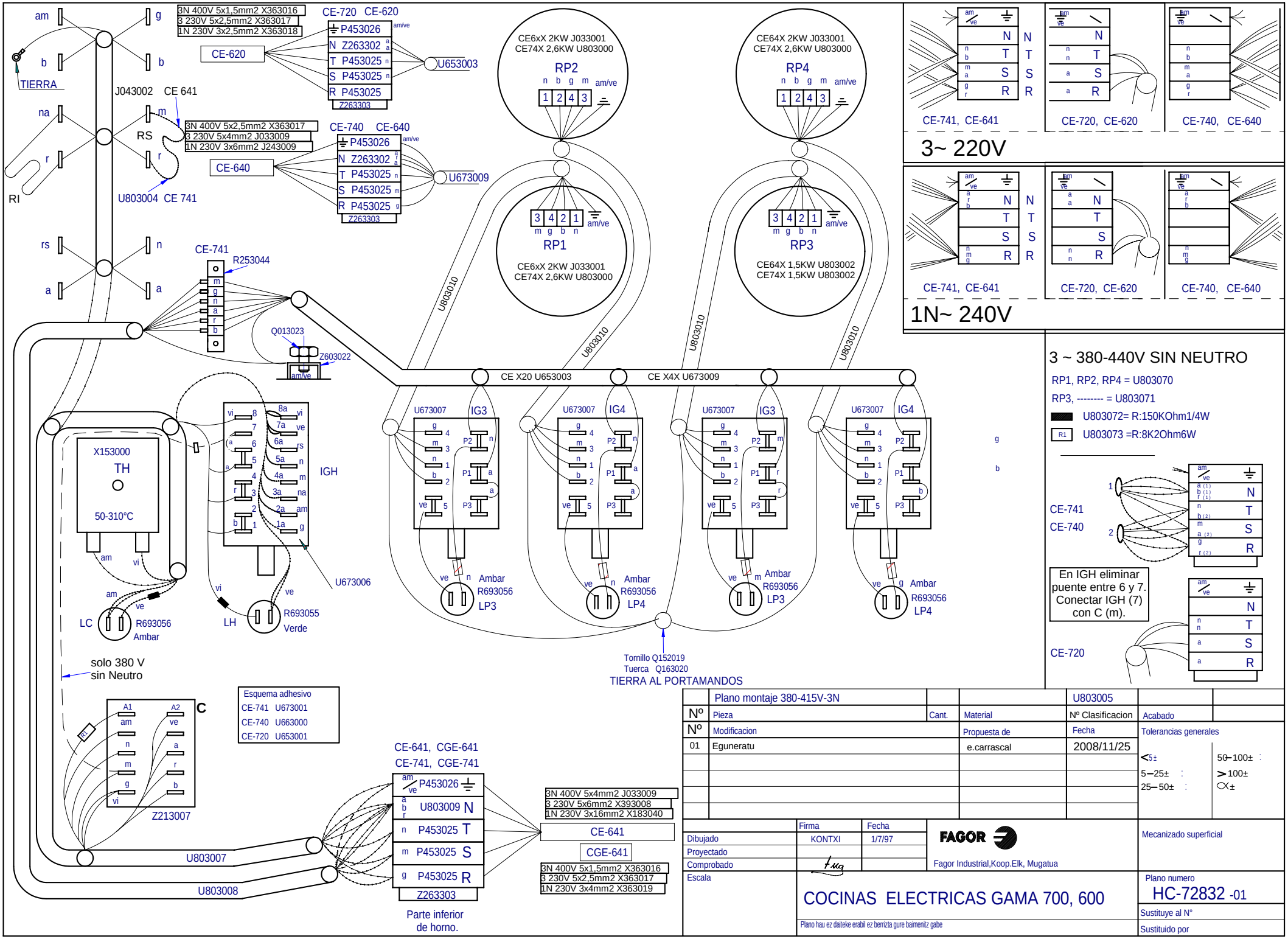
3N 400V 5x1,5mm2 X363016
3 230V 5x2,5mm2 X363017
1N 230V 3x2,5mm2 X363018
CE-720 CE-620
CE-620
P453026
Z263302
P453025
P453025
Z263303
U653003
J043002 CE 641
3N 400V 5x2,5mm2 X363017
3 230V 5x4mm2 J033009
1N 230V 3x6mm2 J243009
CE-740 CE-640
CE-640
P453026
Z263302
P453025
P453025
Z263303
U673009
U803004 CE 741
TIERRA
RI
CE6xX 2KW J033001
CE74X 2,6KW U803000
RP2
CE64X 2KW J033001
CE74X 2,6KW U803000
RP4
RP1
CE6xX 2KW J033001
CE74X 2,6KW U803000
RP3
CE64X 1,5KW U803002
CE74X 1,5KW U803002
CE-741
R253044
Q013023
Z603022
U803010
CE X20 U653003
CE X4X U673009
X153000
TH
50-310°C
IGH
U673006
LC
R693056
Ambar
LH
R693055
Verde
U673007
IG3
IG4
Ambar
R693056
LP3
LP4
Tornillo Q152019
Tuerca Q163020
TIERRA AL PORTAMANDOS
solo 380 V
sin Neutro
Z213007
U803007
U803008
Esquema adhesivo
CE-741 U673001
CE-740 U663000
CE-720 U653001
CE-641, CGE-641
CE-741, CGE-741
P453026
U803009 N
P453025 T
P453025 S
P453025 R
Z263303
Parte inferior
de horno.
3N 400V 5x4mm2 J033009
3 230V 5x6mm2 X393008
1N 230V 3x16mm2 X183040
CE-641
CGE-641
3N 400V 5x1,5mm2 X363016
3 230V 5x2,5mm2 X363017
1N 230V 3x4mm2 X363019
CE-741, CE-641
CE-720, CE-620
CE-740, CE-640
3~ 220V
1N~ 240V
3 ~ 380-440V SIN NEUTRO
RP1, RP2, RP4 = U803070
RP3, -------- = U803071
U803072= R:150KOhm1/4W
U803073 =R:8K2Ohm6W
En IGH eliminar puente entre 6 y 7. Conectar IGH (7) con C (m).
Plano montaje 380-415V-3N
U803005
Nº Pieza
Cant.
Material
Nº Clasificacion
Acabado
Nº Modificacion
Propuesta de
Fecha
01 Eguneratu
e.carrascal
2008/11/25
Tolerancias generales
Dibujado
Proyectado
Comprobado
Escala
Firma
Fecha
KONTXI
1/7/97
FAGOR
Fagor Industrial,Koop.Elk, Mugatua
Mecanizado superficial
COCINAS ELECTRICAS GAMA 700, 600
Plano numero
HC-72832 -01
Sustituye al Nº
Sustituido por
Plano hau ez daiteke erabili ez berrizta gure baimenitz gabe

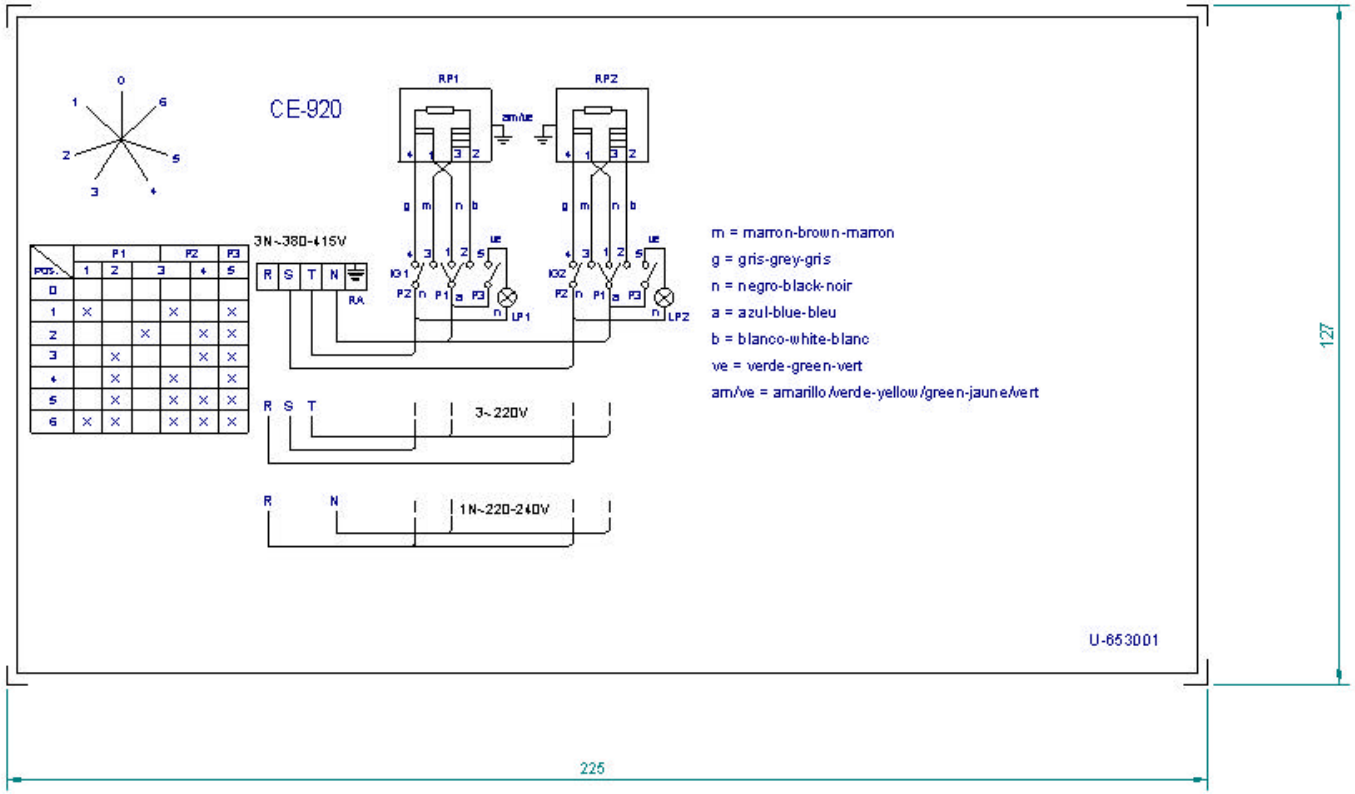


| POS. | P1 1 | P1 2 | P1 3 | P2 4 | P2 5 | P3 |
|---|---|---|---|---|---|---|
| 0 | | | | | | |
| 1 | X | | | X | | X |
| 2 | | | X | | X | X |
| 3 | | X | | | X | X |
| 4 | | X | | X | | X |
| 5 | | X | | X | X | X |
| 6 | X | X | | X | X | X |

NOTA

- Las inscripciones resistirán sin modificación apreciable el frotamiento durante 15 seg. de un algodón impregnado en gasolina.

RA: Regleta de Alimentación

IG1, IG2: Conmutadores de placas eléctricas

RP1, RP2: Placas eléctricas

LP1, LP2: Lámpara Calentamiento de Placas

Plastico blanco alto brillo

| | | | | | | |
|---|---|---|---|---|---|---|
| | Esquema teorico | | | U-653001 | | |
| N° | Pieza | Cant. | Material | N° Clasificacion | Acabado | |
| N° | Modificacion | | Propuesta de | Fecha | Tolerancias generales | |
| | | | | | <5± | 50–100± : |
| | | | | | 5–25± : | >100± |
| | | | | | 25–50± : | <X± |

| | Firma | Fecha |
|---|---|---|
| Dibujado | Plazaola | 21-4-97 |
| Proyectado | | |
| Comprobado | | |

FAGOR

Fagor Industrial, Koop. Elk, Mugatua

Mecanizado superficial

Escala 1/1

COCINAS ELECTRICAS

Plano numero HC-72730

Sustituye al N° HB-70038

Sustituido por

Plano hauez dalleta erabilez herriz agure hárrenz gale

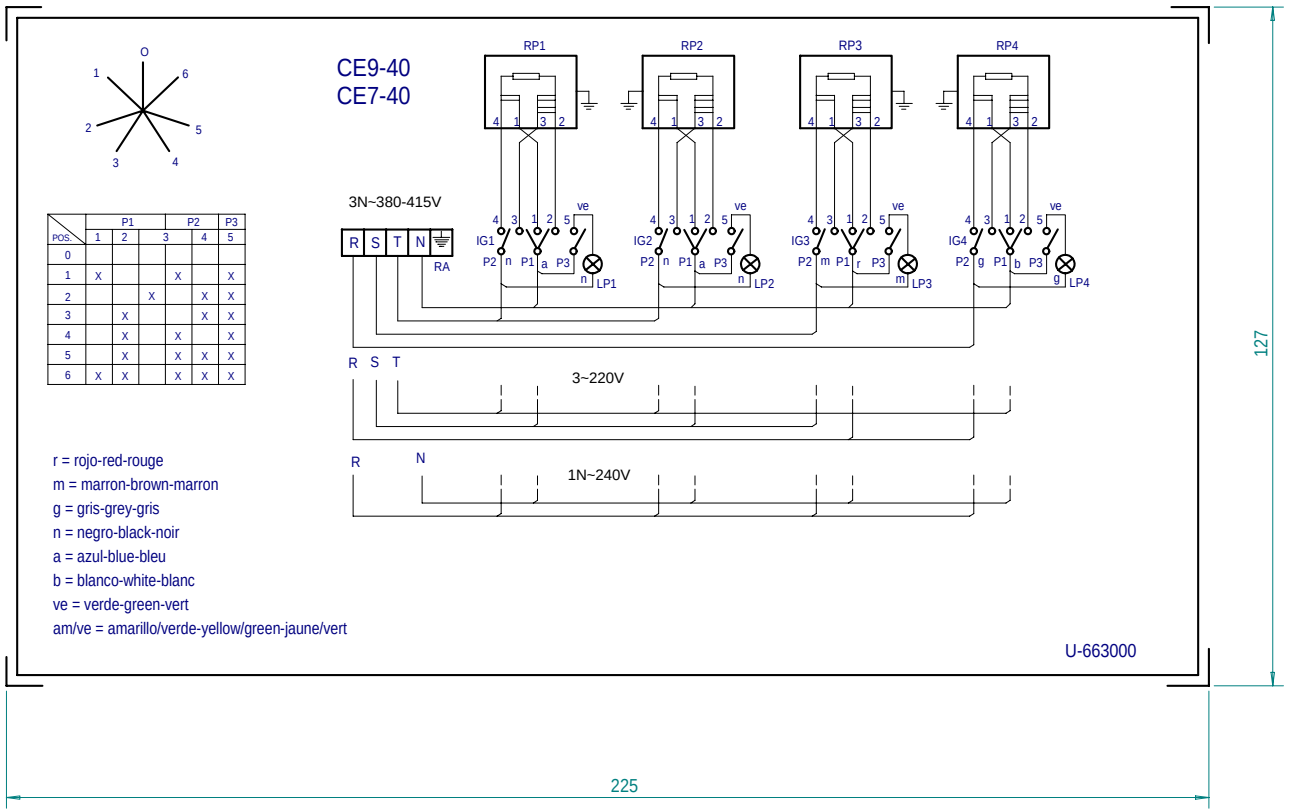


| POS. | P1 | | P2 | | P3 | |
|---|---|---|---|---|---|---|
| | 1 | 2 | 3 | 4 | 5 | |
| 0 | | | | | | |
| 1 | X | | | X | | X |
| 2 | | | X | | X | X |
| 3 | | X | | | X | X |
| 4 | | X | | X | | X |
| 5 | | X | | X | X | X |
| 6 | X | X | | X | X | X |

NOTA

- Las inscripciones resistirán sin modificación apreciable el frotamiento durante 15 seg. de un algodón impregnado en gasolina.

RA: Regleta de Alimentación
IG1, IG2, IG3, IG4: Conmutadores de placas eléctricas
RP1, RP2, RP3, RP4: Placas eléctricas
LP1, LP2, LP3, LP4: Lámpara Calentamiento de Placas

Plastico blanco alto brillo

| | | | | | | |
|---|---|---|---|---|---|---|
| | Esquema teorico | | | U-663000 | | |
| Nº | Pieza | Cant. | Material | Nº Clasificacion | Acabado | |
| Nº | Modificacion | | Propuesta de | Fecha | Tolerancias generales | |
| | | | | | <5± 50–100± : | |
| | | | | | 5–25± : >100± | |
| | | | | | 25–50± : ±X | |

| | Firma | Fecha |
|---|---|---|
| Dibujado | Plazaola | 22-4-97 |
| Proyectado | | |
| Comprobado | | |

FAGOR
Fagor Industrial,Koop.Elk, Mugatua

Mecanizado superficial

Escala 1/1

COCINAS ELECTRICAS

Plano hau ez daiteke erabil ez berrizta gure baimenitz gabe

Plano numero HC-72734
Sustituye al Nº
Sustituido por HB-70039

# CE 941 CE 741 CE 641

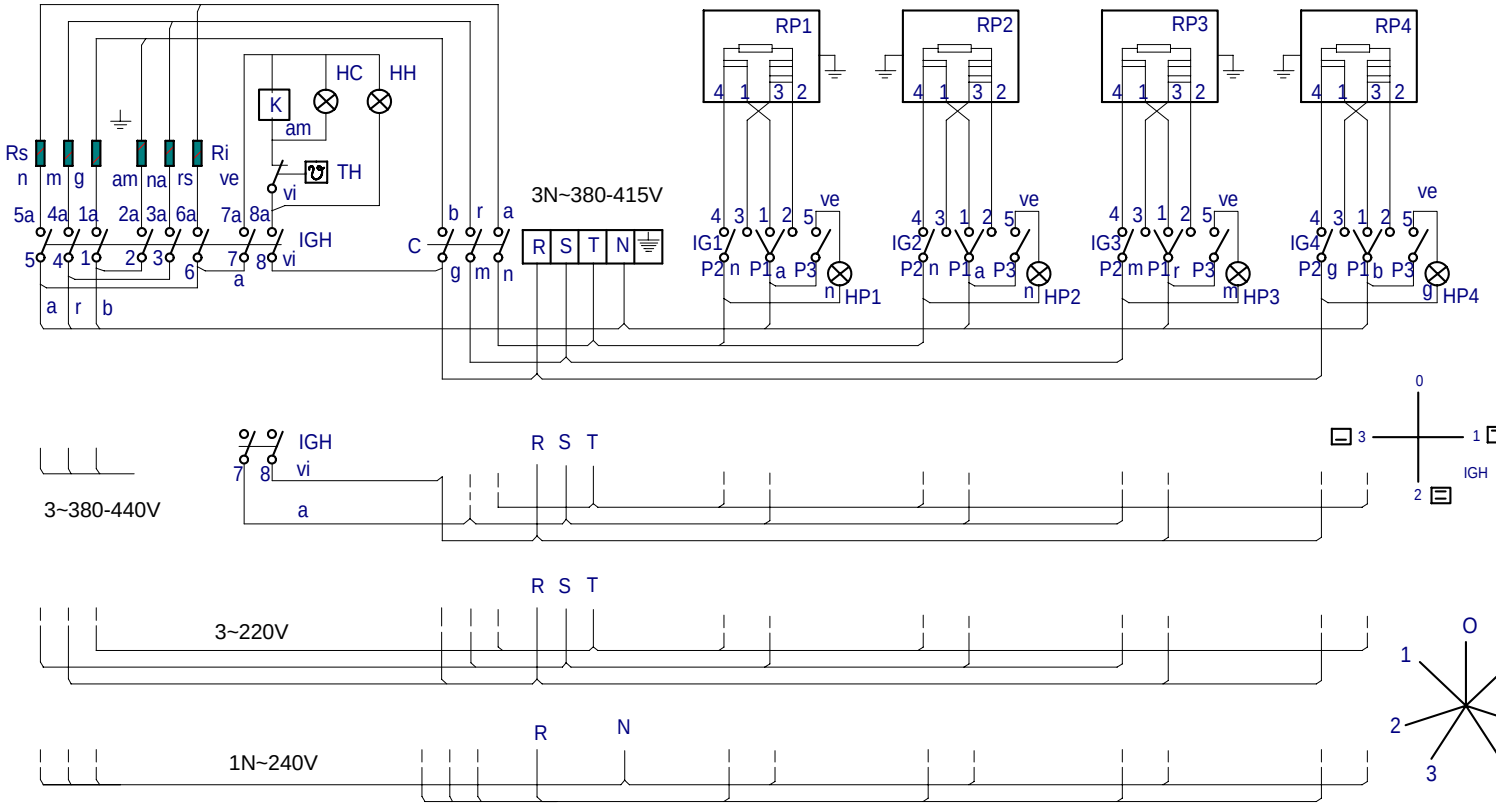


r = rojo-red-rouge
m = marron-brown-marron
g = gris-grey-gris
n = negro-black-noir
a = azul-blue-bleu
b = blanco-white-blanc
vi = violeta-violette-violet
am = amarillo-yellow-jaune
na = naranja-orange-orange
rs = rosa-rose-pink
ve = verde-green-vert
am/ve = amarillo/verde-yellow/green-jaune/vert

| | 1 1a | 2 2a | 3 3a | 4 4a | 5 5a | 6 6a | 7 7a | 8 8a |
|---|---|---|---|---|---|---|---|---|
| 0 | | | | | | | | |
| 1 | X | | | X | X | | X | X |
| 2 | X | X | X | X | X | X | X | X |
| 3 | | X | X | | | X | X | X |




| IG POS. | P1 1 | P1 2 | P2 3 | P2 4 | P3 5 |
|---|---|---|---|---|---|
| 0 | | | | | |
| 1 | X | | | X | X |
| 2 | | | X | | X | X |
| 3 | | X | | | X | X |
| 4 | | X | | X | | X |
| 5 | | X | | X | X | X |
| 6 | X | X | | X | X | X |

HPx :Lampara Calentamiento Placas / Heating lamp (electrical plates)
IGx :Conmutadores de placas electricas / Main switch (electrical plates)
IGH :Conmutador General Horno / Oven main switch
HH : Lampara Horno Encendido / Main lamp (oven)

HC : Lampara Calentamiento Horno / Heating lamp (oven)
Ri : Resistencia Horno Inferior / Lower resistance (oven)
Rs : Resistencia Horno Superior / Top resistance (oven)
RPx :Placas electricas / Electrical plates

BH : Termostato de Horno / Thermostat (oven)
TFR:Transformador / Transformer
K: Contactor / Contactor

U673001000

| | | | | | | |
|---|---|---|---|---|---|---|
| | Esquema teorico adhesivo | | | U-673001 | | |
| Nº | Pieza | Cant. | Material | Nº Clasificacion | Acabado | |
| Nº | Modificacion | | Propuesta de | Fecha | Tolerancias generales | |
| | | | | | <5± | 50–100± : |
| | | | | | 5–25± : | >100± |
| | | | | | 25–50± : | ○± |

| | Firma | Fecha |
|---|---|---|
| Dibujado | jmplazaola | 31/05/05 |
| Proyectado | | |
| Comprobado | | |

FAGOR
Fagor Industrial,Koop.Elk, Mugatua

Mecanizado superficial

Escala 1/1

COCINAS

Plano numero HC-71190

Sustituye al Nº

Sustituido por

Plano hau ez daiteke erabili ez berrizta gure baimenitz gabe