DESPIECE TECNICO

Cocinas a Gas
Gas ranges
Fourneaux à gaz
Gas-herde
Cucine a gas
Fogão a gás

GAMA 900

Modelos:

CG9-05 AD
CG9-10 AD
CG9-11 AD

Octubre 2011 October

FAGOR

FAGOR INDUSTRIAL

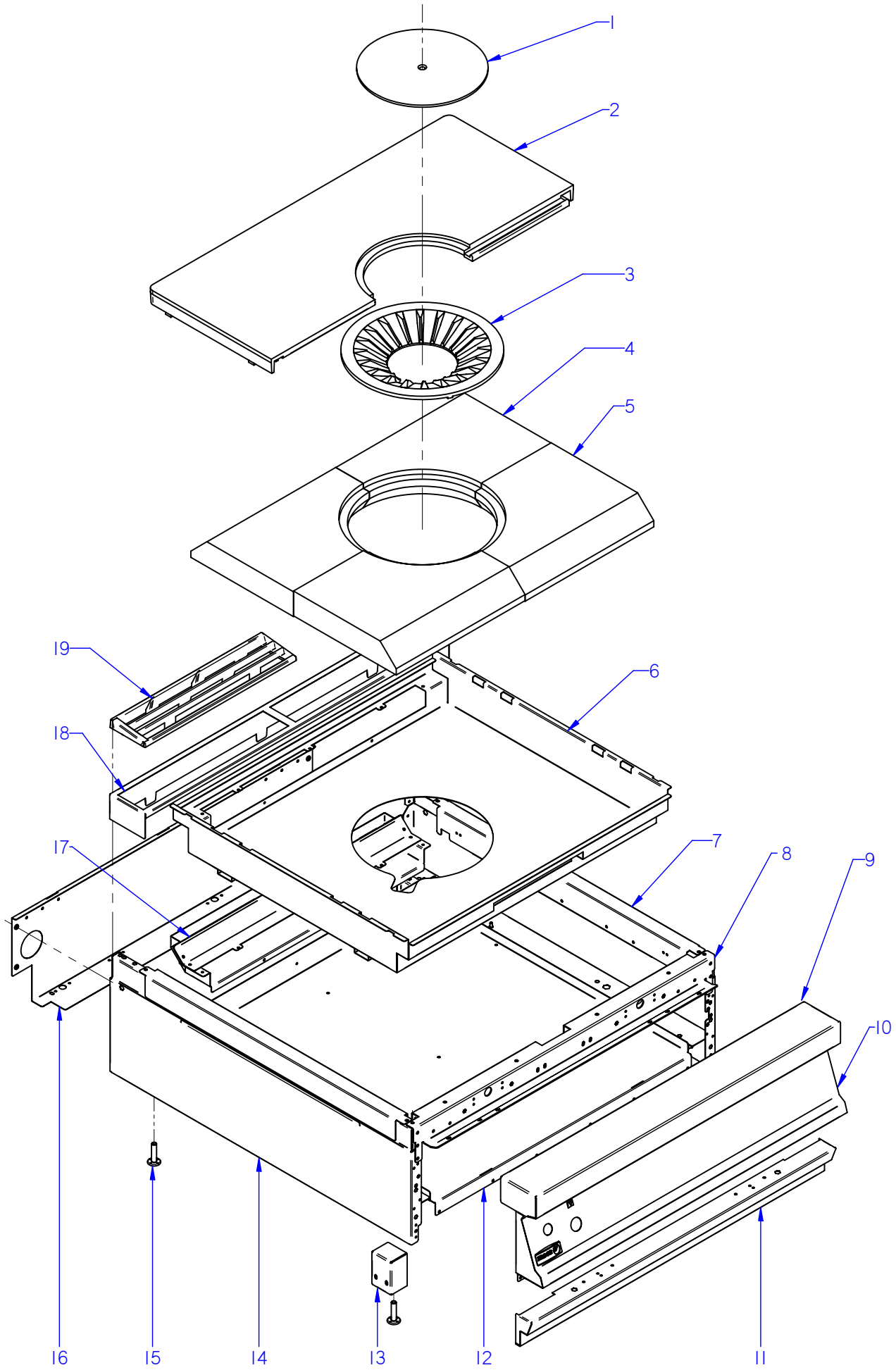

ITEM MARCADO EN COLOR = REPUESTO RECOMENDADO
COLOURED ITEM = RECOMMENDED SPARE PART

Nº plano / N º plane	Firma	Fecha / Date	Denominación / Denomination: MUEBLE / FITTING	Lamina / Sheet	
C-2870		2011-10	COCINA CG9-05 AD/ CG9-10 AD	1	Fagor Industrial S.Coop. FAGOR Oñate

MOD.	COCINAS / RANGES	ZONA / ZONE	MUEBLE / FITTING	PLANO DIAGRAM	C-2870

ITEM	CODIGO REFERENCE	DENOMINACION	DENOMINATION	CG9-05 AD	CG9-10 AD							ELIMINADO ELIMINATED	INTRODUCID. INTRODUCED	NOTAS
1	U195421000	RODELA	GUIDE RING	1	1									
2	U025412000	MEDIA PLACA G900	MEDIUM PLATE G900	1	2									
3	U195420000	RODELA DIFUSORA FG-8	DISPENSER GUIDE RING FG-8	1	1									
4	U965421000	PIEDRA REFRACTARIA 731	REFRACTORY	2	_									
4	U615408000	REFRACTARIO DERECHO	RIGHT REFRACTORY	_	2									
5	U615407000	REFRACTARIO IZQUIERDO	LEFT REFRACTORY	_	2									
6	U965422000	CAJON REFRACTARIO 1/2	REFRACTORY DRAWER 1/2	1	_									
6	U962661000	CAJON REFRACTARIO AD	REFRACTORY DRAWER AD	_	1									
7	R062810000	PANEL LATERAL DERECHO G900	RIGHT SIDE PANEL G900	1	1									
	Q221342000	REMACHE EXAGONAL M5	HEXAGONAL RIVET M5	9	9									
	Q221343000	REMACHE EXAGONAL M6	HEXAGONAL RIVET M6	1	1									
8	R042611000	ESCUA INTER AMAR ANTE 0,5 M	BRACKET INTER FASTE. FRONT	1	_									
8	U042610000	ESCUA INTER AMAR ANTE 1 M	BRACKET INTER FASTE. FRONT	_	1									
	Q221342000	REMACHE EXAGONAL M5	HEXAGONAL RIVET M5	4	4									
	Q012032000	TORNILLO EXAGONAL M5x15	HEXAGONAL BOLT M5x15	6	6									
9	U965415000	ANTERIOR MESA 0,5 M AD	BENCH FRONT 0.5 M AD	1	_									
9	S105403000	ANTERIOR MESA 1 M AD	BENCH FRONT 1 M AD	_	1									
	Q152004000	TORNIL, APLASTADO M5x13 A304	FLAT HEADED BOLT M5x13 A304	2	2									
	Q302022000	ARANDELA 16x6x1,2 A304	WASHER 16x6x1.2 A304	2	2									
10	U962823000	PORTAMANDOS COMP. CG9-05 AD	CONTROL HOLDER CG9-05 AD	1	_									
10	U962810000	PORTAMANDOS COMP. CG9-10 AD	CONTROL HOLDER CG9-10 AD	_	1									
	U022836000	ESCUDO FAGOR	FAGOR EMBLEM	1	1									
	Q221023000	CLIP SUJECIÓN RÁPIDA Ø5	RAPID CONNECT CLIP Ø5	2	2									
	Q152004000	TORNIL, APLASTADO M5x13 A304	FLAT HEADED BOLT M5x13 A304	2	2									
11	R062805000	ZOCALO 0,5 M	SKIRTING 0.5 M	1	_									
11	H352817000	ZOCALO BAÑO MARIA	BAIN MARIE SKIRTING	_	1									
	Q419005000	REMACHE 4x8 ALMG3 / ALUMINIO	RIVET 4X8 ALMG3 / ALUMINIUM	2	2									
12	U962646000	BASE CG9-20 AD	BASE CG9-20 AD	1	_									
12	U962623000	BASE CG9-40 AD	BASE CG9-40 AD	_	1									
	Q412000000	REMACHE TUBULAR 4X8	TUBULAR RIVET 4X8	5	9									

MOD.	COCINAS / RANGES	ZONA / ZONE	MUEBLE / FITTING	PLANO DIAGRAM	C-2870

ITEM	CODIGO REFERENCE	DENOMINACION	DENOMINATION	CG9-05 AD	CG9-10 AD							ELIMINADO ELIMINATED	INTRODUCID. INTRODUCED	NOTAS
13	U962627000	ESCUADRA AMARRE PATA AD	LEG FASTENING BRACKET AD	2	2									
	Q162030000	TUERCA EXAGONAL M5	HEXAGONAL NUT M5	4	4									
	Q302022000	ARANDELA 16x6x1,2 A304	WASHER 16x6x1.2 A304	4	4									
	Q221345000	REMACHE EXAGONAL M10	HEXAGONAL RIVET M10	2	2									
14	R062811000	PANEL LATERAL IZQUIERDO G900	LEFT SIDE PANEL G900	1	1									
	Q221342000	REMACHE EXAGONAL M5	HEXAGONAL RIVET M5	3	3									
	Q221343000	REMACHE EXAGONAL M6	HEXAGONAL RIVET M6	5	5									
15	Z200107000	PATA	LEG	2	2									
	Q221345000	REMACHE EXAGONAL M10	HEXAGONAL RIVET M10	4	4									
S/Nº	X010503000	CIERRE MUELLE	LOCK SPRING	4	4									
	Q419007000	REMACHE TUBULAR C/V Ø2x6	TUBULAR RIVET C/V Ø2x6	8	8									
16	R042838000	PANEL POSTERIOR 0,5 M	REAR PANEL 0.5 M	1	_									
16	U042805000	PANEL POSTERIOR 1 M	REAR PANEL 1 M	_	1									
	Q419005000	REMACHE 4x8 ALMG3 / ALUMINIO	RIVET 4X8 ALMG3 / ALUMINIUM	4	4									
	Q302022000	ARANDELA 16x6x1,2 A304	WASHER 16x6x1.2 A304	4	4									
17	U202615000	ANTERIOR DE CHIMENEA	FLUEPIPE FRONT	1	_									
17	U962664000	ANTERIOR DE CHIMENEA AD	FLUEPIPE FRONT AD	_	1									
S/Nº	U202616000	POSTERIOR CHIMENEA	REAR FLUEPIPE	1	_									
S/Nº	U962665000	POSTERIOR CHIMENEA AD	REAR FLUEPIPE AD	_	1									
	Q419005000	REMACHE 4x8 ALMG3 / ALUMINIO	RIVET 4X8 ALMG3 / ALUMINIUM	2	11									
18	R205438000	SOPORTE EMBELLECEDOR 0,5 M	TRIM SUPPORT 0.5 M	1	_									
18	R205439000	SOPORTE EMBELLECEDOR 1 M	TRIM SUPPORT 1 M	_	1									
19	R205425000	EMBELLECEDOR ESMALTE	ENAMEL TRIM	1	2									

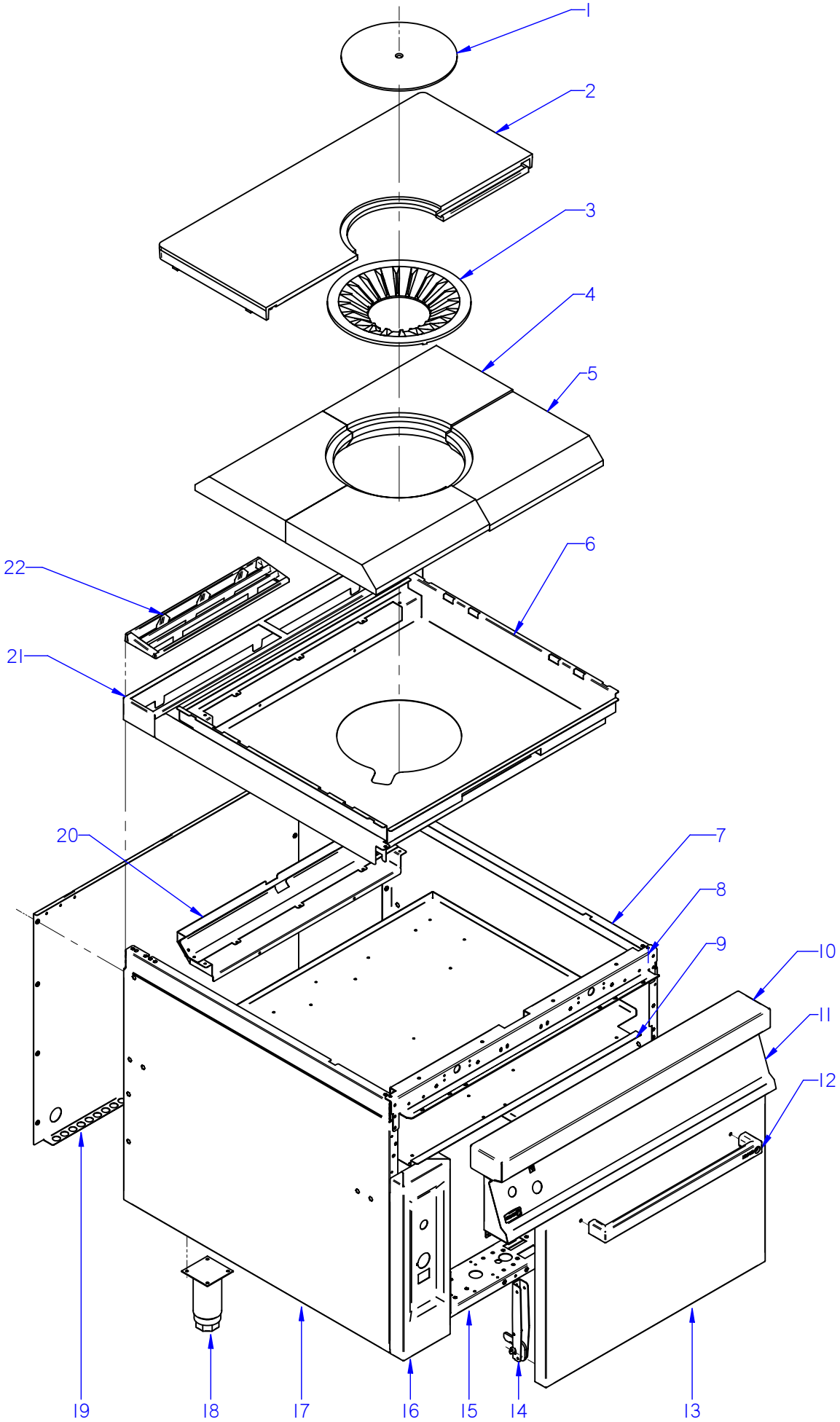

ITEM MARCADO EN COLOR = REPUESTO RECOMENDADO
COLOURED ITEM = RECOMMENDED SPARE PART

Nº plano / N º plane	Firma	Fecha / Date	Denominación / Denomination: MUEBLE / FITTING	Lamina / Sheet	
C-2871		2011-09	COCINA CG9-11 AD	2	Fagor Industrial S.Coop. FAGOR Oñate

MOD.	COCINAS / RANGES	ZONA / ZONE	MUEBLE / FITTING	PLANO DIAGRAM	C-2871

ITEM	CODIGO REFERENCE	DENOMINACION	DENOMINATION	CG9-11 AD								ELIMINADO ELIMINATED	INTRODUCID. INTRODUCED	NOTAS
1	U195421000	RODELA	GUIDE RING	1										
2	U025412000	MEDIA PLACA G900	MEDIUM PLATE G900	2										
3	U195420000	RODELA DIFUSORA FG-8	DISPENSER GUIDE RING FG-8	1										
4	U615408000	REFRACTARIO DERECHO	RIGHT REFRACTORY	2										
5	U615407000	REFRACTARIO IZQUIERDO	LEFT REFRACTORY	2										
6	U962661000	CAJON REFRACTARIO AD	REFRACTORY DRAWER AD	1										
7	U022842000	PANEL LATERAL DERECHO G9-00	RIGHT SIDE PANEL G9-00	1										
	Q221343000	REMACHE EXAGONAL M6	HEXAGONAL RIVET M6	11										
	Q221342000	REMACHE EXAGONAL M5	HEXAGONAL RIVET M5	11										
	Q012043000	TORNILLO EXAGONAL M6x20 A304	HEXAGONAL BOLT M6x20 A304	2										
	Q152004000	TORNILLO APLASTADO M5x13 A30	FLAT HEADED BOLT M5x13 A304	3										
8	U042610000	ESCUA INTER AMAR ANTE 1 M	BRACKET INTER FASTE. FRONT	1										
	Q221342000	REMACHE EXAGONAL M5	HEXAGONAL RIVET M5	4										
	Q012032000	TORNILLO EXAGONAL M5x15	HEXAGONAL BOLT M5x15	4										
	Q152004000	TORNIL, APLASTADO M5x13 A304	FLAT HEADED BOLT M5x13 A304	6										
	Q302022000	ARANDELA 16x6x1,2 A304	WASHER 16x6x1.2 A304	6										
9	U962657000	BASE BANDEJAS 1 M AD	TRAY BASE 1 M AD	1										
	Q419005000	REMACHE 4x8 ALMG3 / ALUMINIO	RIVET 4X8 ALMG3 / ALUMINIUM	2										
	Q152004000	TORNIL, APLASTADO M5x13 A304	FLAT HEADED BOLT M5x13 A304	3										
10	S105403000	ANTERIOR MESA 1 M AD	BENCH FRONT 1 M AD	1										
	Q152004000	TORNIL, APLASTADO M5x13 A304	FLAT HEADED BOLT M5x13 A304	2										
	Q302022000	ARANDELA 16x6x1,2 A304	WASHER 16x6x1.2 A304	2										
11	U962812000	PORTAMANDOS COMP. CG9-11 AD	CONTROL HOLDER CG9-11 AD	1										
	U022836000	ESCUDO FAGOR	FAGOR EMBLEM	1										
	Q221023000	CLIP SUJECIÓN RÁPIDA Ø5	RAPID CONNECT CLIP Ø5	2										
	Q152004000	TORNIL, APLASTADO M5x13 A304	FLAT HEADED BOLT M5x13 A304	4										
12	Z900527000	ASA	HANDLE	1										
	Q012041000	TORNILLO EXAGONAL M6x10	HEXAGONAL BOLT M6x10	2										
	Q302022000	ARANDELA 16x6x1,2 A304	WASHER 16x6x1.2 A304	2										
13	U910501000	PUERTA DE HORNO	OVEN DOOR	1										

MOD.	COCINAS / RANGES	ZONA / ZONE	MUEBLE / FITTING	PLANO DIAGRAM	C-2871

ITEM	CODIGO REFERENCE	DENOMINACION	DENOMINATION	CG9-11 AD								ELIMINADO ELIMINATED	INTRODUCID. INTRODUCED	NOTAS
14	U020528000	BISAGRA CIERRE HORNO	OVEN LOCK HINGE	2										
	Q152022000	TORNILLO M6x8	BOLT M6x8	6										
15	U962622000	LISTON SOPORTE PATAS 1 M AD	LEG SUPPORT STRIP 1 M AD	2										
16	U962829000	PORTAMAN. LATERAL HORNO AD	OVEN SIDE CONTROL HOLDER	1										
	Q152004000	TORNIL, APLASTADO M5x13 A304	FLAT HEADED BOLT M5x13 A304	2										
17	X162813000	PANEL LATERAL IZQUIERDO G900	LEFT SIDE PANEL G900	1										
	Q221343000	REMACHE EXAGONAL M6	HEXAGONAL RIVET M6	11										
	Q221342000	REMACHE EXAGONAL M5	HEXAGONAL RIVET M5	11										
	Q012043000	TORNILLO EXAGONAL M6x20 A304	HEXAGONAL BOLT M6x20 A304	2										
	Q152004000	TORNILLO APLASTADO M5x13 A30	FLAT HEADED BOLT M5x13 A304	3										
18	X260151000	PATA REGULABLE	ADJUSTABLE LEG	4										
	Q411304000	REMACHE AVIBULB Ø 4,8	AVIBULB RIVET Ø 4.8	16										
19	X022841000	PANEL POSTERIOR 1 M AD	REAR PANEL 1 M AD	1										
	Q419005000	REMACHE 4x8 ALMG3 / ALUMINIO	RIVET 4X8 ALMG3 / ALUMINIUM	8										
20	U962664000	ANTERIOR DE CHIMENEA AD	FLUEPIPE FRONT AD	1										
S/Nº	U962665000	POSTERIOR CHIMENEA AD	REAR FLUEPIPE AD	1										
	Q419005000	REMACHE 4x8 ALMG3 / ALUMINIO	RIVET 4X8 ALMG3 / ALUMINIUM	11										
21	R205439000	SOPORTE EMBELLECEDOR 1 M	TRIM SUPPORT 1 M	1										
22	R205425000	EMBELLECEDOR ESMALTE	ENAMEL TRIM	2										

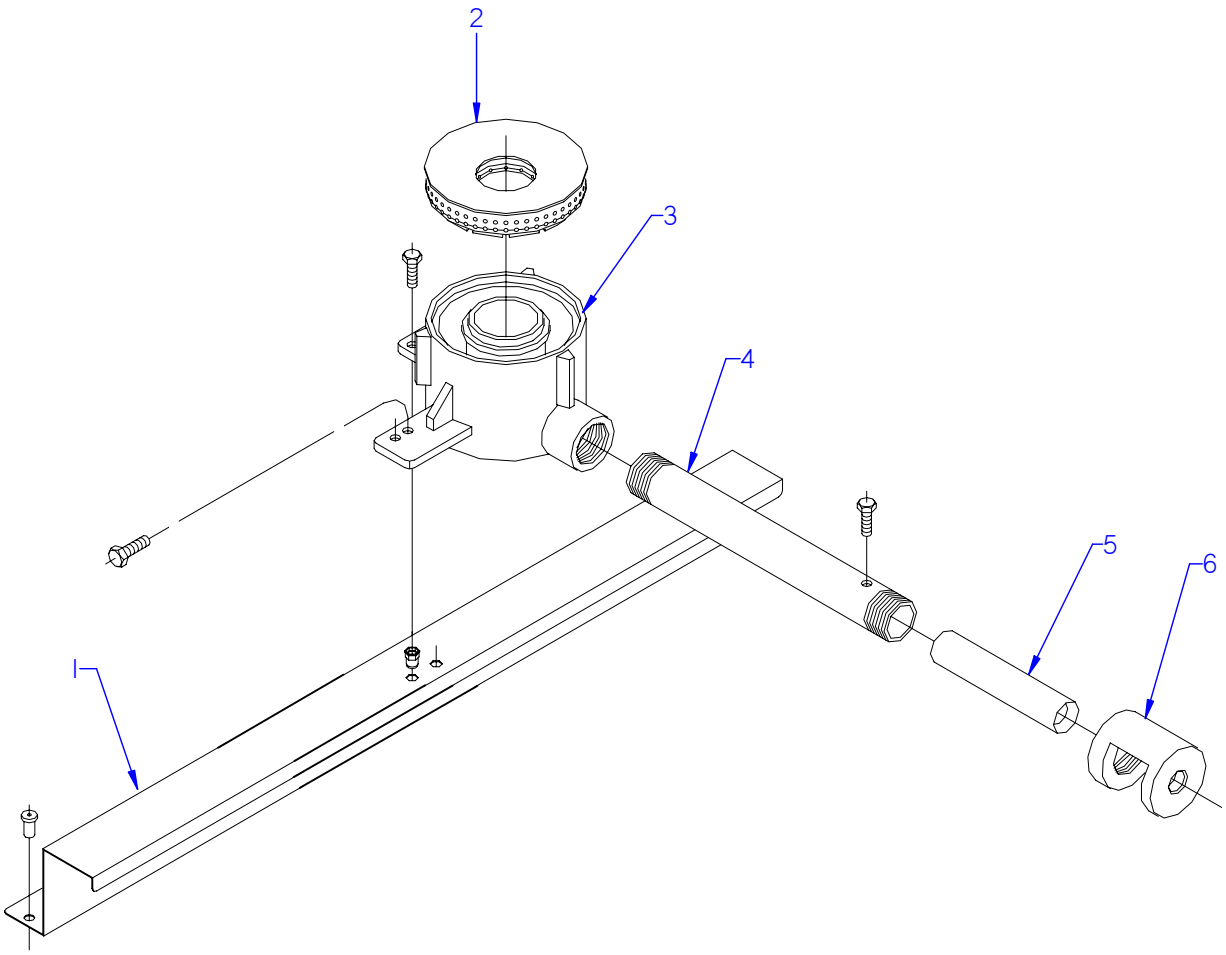

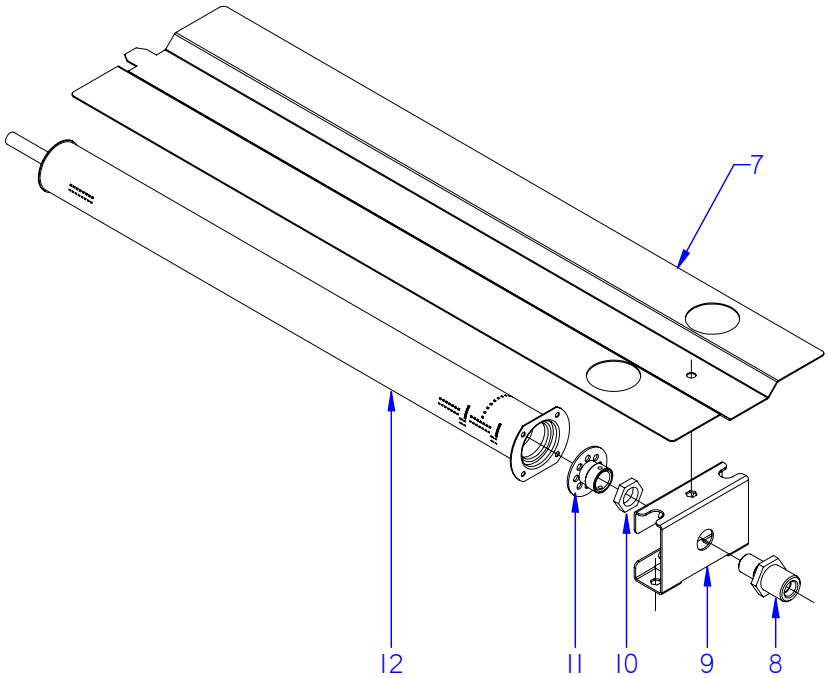

ITEM MARCADO EN COLOR = REPUESTO RECOMENDADO
COLOURED ITEM = RECOMMENDED SPARE PART

Nº plano / N º plane	Firma	Fecha / Date	Denominación / Denomination: QUEMADORES / BURNERS	Lamina / Sheet	
C-2872		2011-09	COCINA CG9-05 AD/ 10 AD/ 11 AD	3	Fagor Industrial S.Coop. FAGOR Oñate

MOD.	COCINAS / RANGES	ZONA / ZONE	QUEMADORES / BURNERS	PLANO DIAGRAM	C-2872

ITEM	CODIGO REFERENCE	DENOMINACION	DENOMINATION	CG9-05 AD	CG9-10 AD	CG9-11 AD						ELIMINADO ELIMINATED	INTRODUCID. INTRODUCED	NOTAS
1	U202606000	SOPORTE QUEMADOR	BURNER SUPPORT	1	_	_								
1	U962660000	SOPORTE QUEMADOR MESA AD	BURNER SUPPORT STRIP AD	_	1	1								
	Q419005000	REMACHE 4x8 ALMG3 / ALUMINIO	RIVET 4X8 ALMG3 / ALUMINIUM	2	2	2								
	Q221342000	REMACHE EXAGONAL M5	HEXAGONAL RIVET M5	2	2	2								
2	U445731000	QUEMADOR 4000 (00545-010)	BURNER 4000 (00545-010)	1	_	_								
2	U195701500	QUEMADOR 10850 KCAL. PINTADO	BURNER10850 KCAL.	_	1	1								
3	U025709000	CUERPO QUEMADOR 4000Kcal/H	BURNER BODY 4000 Kcal/H	1	_	_								
3	U195702000	CUERPO DE QUEMADOR MECANI.	BURNER BODY	_	1	1								
	Q371026000	MANGUITO DE SUJECION Ø 4x14	HANDLE Ø 4x14	1	_	_								
4	U195703000	TUBO MEZCLADOR	MIXING PIPE	_	1	1								
	Q223019000	TUERCA 3/8 GAS LATÓN	NUT 3/8 GAS BRASS	_	1	1								
	Q153002000	TORNILLO TAPON	CAP BOLT	_	1	1								
5	U125720000	VENTURI QUEMADOR 4000 kcl	VENTURI BURNER 4000 kcl	1	_	_								
5	U775701000	VENTURI QUEMADOR	VENTURI QUEMADOR	_	1	1								
6	U265702000	REGULADOR AIRE	AIR CONTROLLER	1	_	_								
6	U615700500	CAMARA DE MEZCLA PINTADA	PAINT MIXING CHAMBER	_	1	1								
	Q131542000	VARILLA ROSCADA M6 x 15	THREADED ROD M6 x 15	1	_	_								
	Q162004000	TUERCA EXAGONAL M6	HEXAGONAL NUT M6	1	_	_								
7	U915613000	DEFLECTOR QUEMADOR HORNO	OVEN BURNER DEFLECTOR	_	_	2								
	Q152004000	TORNIL, APLASTADO M5x13 A304	FLAT HEADED BOLT M5x13 A304	_	_	1								
	Q302022000	ARANDELA 16x6x1,2 A304	WASHER 16x6x1.2 A304	_	_	1								
8	X505724000	MANGUITO PORTATOBERAS	NOZZLE HOLDER SLEEVE	_	_	1								
9	U105635000	AMARRE QUEMADOR HORNO(HG)	OVEN BURNER FASTENING (HG)	_	_	1								
	Q012031000	TORNILLO EXAGONAL M5x10 A304	HEXAGONAL BOLT M5x10 A304	_	_	2								
	Q222041000	REMACHE EXAGONAL M4 (INOX)	HEXAGONAL RIVET M4 (INOX)	_	_	4								
10	Q223019000	TUERCA 3/8 GAS LATÓN	NUT 3/8 GAS BRASS	_	_	1								
11	X505013000	REGULADOR DE AIRE POLIDORO	POLIDORO AIR CONTROL	_	_	1								
	Q031322000	TORNILLO ALOMADO M4X15	CURVED SCREW M4X15	_	_	1								
12	U105701000	QUEMADOR HORNO	OVEN BURNER.	_	_	1								
S/Nº	U052401000	TOBERA Ø 1,45 BP	NOZZLE Ø 1.45 BP	_	_	1								
S/Nº	U262400000	TOBERA Ø 2,15 GN	NOZZLE Ø 2,15 GN	_	_	1								

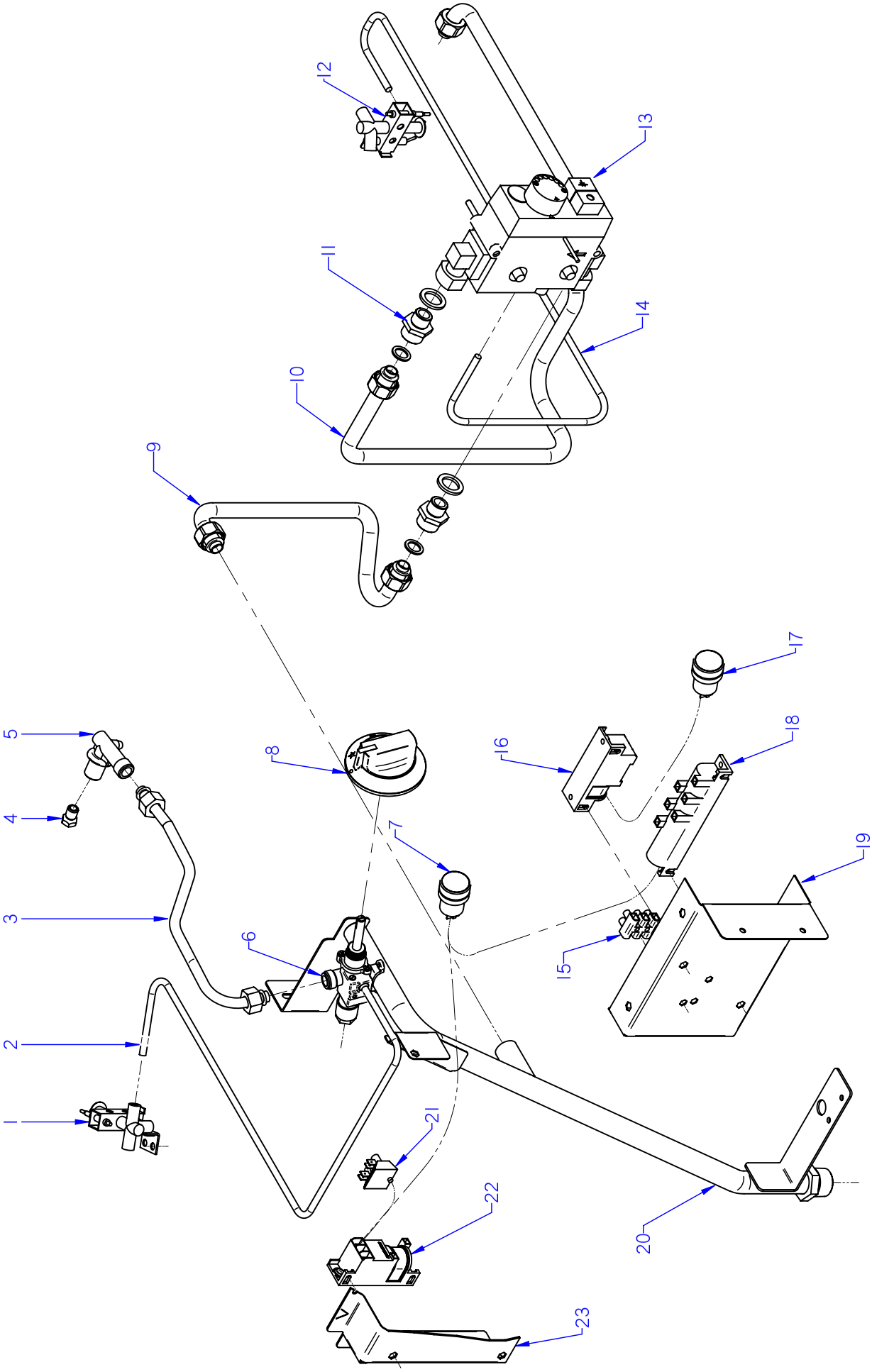

ITEM MARCADO EN COLOR = REPUESTO RECOMENDADO
COLOURED ITEM = RECOMMENDED SPARE PART

Nº plano / N º plane	Firma	Fecha / Date	Denominación / Denomination: PARTE FUNCIONAL / FUNCTIONAL PART	Lamina / Sheet	
C-2873		2011-10	COCINA CG9-05 AD/ 10 AD/ 11 AD	4	Fagor Industrial S.Coop. FAGOR Oñate

MOD.	COCINAS / RANGES	ZONA / ZONE	PARTE FUNCIONAL / FUNCTIONAL PART	PLANO DIAGRAM	C-2873

ITEM	CODIGO REFERENCE	DENOMINACION	DENOMINATION	CG9-05 AD	CG9-10 AD	CG9-11 AD						ELIMINADO ELIMINATED	INTRODUCID. INTRODUCED	NOTAS
1	U962109000	PILOTO S140	PILOT S140	1	_	_								
1	U192104000	PILOTO COMPLETO	COMPLETE PILOT LIGHT	_	1	1								
S/Nº	U962102000	TERMOPAR 600	THERMOCOUPLE 600	1	_	_								
S/Nº	U222130000	TERMOPAR L=600	THERMOCOUPLE L=600	_	1	1								
S/Nº	U962107000	INYECTOR LPG	INJECTOR LPG	1	_	_								
S/Nº	U962106000	INYECTOR NG	INJECTOR NG	1	_	_								
S/Nº	U442137000	INYECTOR Ø 0,4 GN	INJECTOR Ø 0.4 GN.	_	1	1								
S/Nº	X012101000	BUJIA 915.037	SPARK PLUG	1	_	_								
S/Nº	X022131000	BUJIA	SPARK PLUG	_	1	1								
S/Nº	S312107000	MANGUITO TUBO PILOTO	PILOT PIPE HOSE	2	_	_								
S/Nº	U962108000	BICONO Ø 6	BICONE Ø 6	1	_	_								
2	U965014000	TUBO PILOTO	PILOT PIPE	1	_	_								
2	U965013000	CONDUCCIN PILOTO MESA AD	TABLE PILOT CONDUCCIN AD		1	1								
S/Nº	S312107000	MANGUITO TUBO PILOTO	PILOT PIPE HOSE	2	2	2								
S/Nº	X205028000	BICONO Ø 6	BICONE Ø 6	1	2	2								
3	U205038000	CONDUCCION QUEMADOR	BURNER DRIVE	1	_	_								
3	U965011000	TUBO VALVULA QUEMADOR	BURNER VALVE PIPE		1	1								
4	U122407000	TOBERA Ø 1,05 BP (4000)	NOZZLE Ø 1.05 BP (4000)	1	_	_								
4	R302400000	TOBERA Ø 1,65 GN (4000)	NOZZLE Ø 1.65 GN (4000)	1	_	_								
4	R302400000	TOBERA Ø 1,65 BP (10850)	NOZZLE Ø 1.65 BP (10850)	_	1	1								
4	U054400000	TOBERA Ø 2,5 GN (10850)	NOZZLE Ø 2,5 GN (10850)	_	1	1								
5	U965033000	PORTATOBERAS Ø 10	NOZZLE HOLDER Ø 10	1	_	_								
5	U915014000	PORTATOBERAS HORNO	OVEN NOZZLE HOLDER	_	1	1								
S/Nº	U565011000	TUERCA GUIA	NUT GUIDE	1	_	_								
S/Nº	Q153002000	TORNILLO TAPON	CAP BOLT	1	_	_								
6	U912115000	GRIFO 18700 BY-PASS 0,75	TAP 18700 BY-PASS 0,75	1	_	_								
6	U942102000	GRIFO 18700 BY-PASS 1,20	TAP 18700 BY-PASS 1,20	_	1	1								
S/Nº	U912104000	BRIDA AMARRE GRIFO 1/2"	TAP FASTENING FLANGE 1/2"	1	1	1								
	Q122032000	TORNILLO ALLEN M5x15	ALLEN BOLT M5x15	_	1	1								
7	T723009000	PULSADOR SERIE MICRO	MICRO SWITCH SERIES	1	1	1								
8	U022117000	MANDO MONT COCINA GAS Ø8	GAS COOK. ASSEMBLY CTRL Ø8	1	1	1								

MOD.	COCINAS / RANGES	ZONA / ZONE	PARTE FUNCIONAL / FUNCTIONAL PART	PLANO DIAGRAM	C-2873

ITEM	CODIGO REFERENCE	DENOMINACION	DENOMINATION	CG9-05 AD	CG9-10 AD	CG9-11 AD						ELIMINADO ELIMINATED	INTRODUCID. INTRODUCED	NOTAS
9	U025050000	ENTRADA MINISIT COMPL CG900	INPUT MINISIT COMPL CG900	_	_	1								
	Q306062000	ARANDELA Ø13,9X10,33x1,5	WASHER Ø13.9X10.33x1.5	_	_	8								
10	U025061000	TUBO COMPLETO EUROSIT QUEM	COMPLETE PIPE EUROSIT BURN	_	_	1								
11	U202103000	MANGUITO REDUCCION 1/2-3/8"	REDUCTION HOSE 1/2-3/8"	_	_	2								
	Q306058000	ARANDELA 25x17X2.5	WASHER 25x17X2.5	_	_	2								
12	U322118000	PILOTO COMPLETO 100.062	COMPLETE PILOT LIGHT 100,062	_	_	1								
S/Nº	U442137000	INYECTOR Ø 0,4 GN	INJECTOR Ø 0.4 GN.	_	_	1								
S/Nº	U562130000	TERMOPAR L=850	THERMOCOUPLE L=850	_	_	1								
	Q012031000	TORNILLO EXAGONAL M5x15 A304	HEXAGONAL BOLT M5x15 A304	_	_	2								
13	U134324000	VALVULA MINISIT 0710.654	VALVE MINISIT 0710.654	_	_	1								
S/Nº	Q307041000	JUNTA TORICA 25,4x20,2x2,6	O-RING 25.4x20.2x2.6	_	_	2								
S/Nº	U134317000	MANDO NEGRO MINI 916.124	BLACK CTRL. MINI 916.124	_	_	1								
S/Nº	U134318000	CUBIERTA MINISIT 903.052	COVER MINISIT 903.052	_	_	1								
S/Nº	Q031322000	TORNILLO ALOMADO M4x15	CURVED SCREW M4X15	_	_	8								
S/Nº	U264300000	RACOR 3/8 906,252	CONNECTION 3/8 906.252	_	_	2								
S/Nº	U134323000	RACORD BICONO 6 958.031	BICONE CONNECTION 6 958.031	_	_	1								
14	U025062000	TUBO PILOTO EUROSIT QUEM.	PILOT PIPE EUROSIT BURNER	_	_	1								
	U134323000	RACORD BICONO 6 958.031	BICONE CONNECTION 6 958.031	_	_	2								
15	Z713035000	REGLETA 6MM	C6MM STRIP	_	_	1								
16	X163014000	ENCENDEDOR PARA 2 BUJIAS	LIGHTER FOR 2 PLUGS	_	_	1								
17	T723009000	PULSADOR SERIE MICRO	MICRO SWITCH SERIES	_	_	1								
18	U963001000	TREN DE CHISPAS 6	TRAIN SPARKS 6	_	_	1								
19	U962683000	CUADRO ELECTRIC COCINA AD	ELECTRIC KITCHEN TABLE AD	_	_	1								
S/Nº	U962684000	TAPA CUADRO ELEC. AD	TABLE TOP ELEC. AD	_	_	1								
20	U015011000	DISTRIBUIDOR COMPLET. CG9-05	COMPL. DISTRIBUTOR CG9-05	1	_	_								
20	U645055000	DISTRIBUIDOR COMPLET. CG9-10	COMPL. DISTRIBUTOR CG9-10	_	1	_								
20	U615058000	DISTRIBUIDOR COMPLET. CG9-11	COMPL. DISTRIBUTOR CG9-11	_	_	1								
	Q221342000	REMACHE EXAGONAL M5	HEXAGONAL RIVET M5	1	1	1								
	Q152004000	TORNIL, APLASTADO M5x13 A304	FLAT HEADED BOLT M5x13 A304	2	2	1								
	U635008000	TUERCA CIEGA 3/4	BLIND NUT 3/4	2	2	_								
	Q306051000	ARANDELA TAPON Ø23,5x3	LID WASHER Ø23.5x3	2	2	_								

MOD.	COCINAS / RANGES	ZONA / ZONE	PARTE FUNCIONAL / FUNCTIONAL PART	PLANO DIAGRAM	C-2873

ITEM	CODIGO REFERENCE	DENOMINACION	DENOMINATION	CG9-05 AD	CG9-10 AD	CG9-11 AD						ELIMINADO ELIMINATED	INTRODUCID. INTRODUCED	NOTAS
21	Z713035000	REGLETA 6MM	C6MM STRIP	1	1	_								
22	X163014000	ENCENDEDOR PARA 2 BUJIAS	LIGHTER FOR 2 PLUGS	1	1	_								
23	U962668000	CAJA TREN CHISPA 920 SOLD	TRAIN SPARK BOX 920 SOLD	1	_	_								
23	U962669000	CAJA TREN CHISPA SOLD AD	TRAIN SPARK BOX SOLD AD	_	1	_								
	Q012031000	TORNILLO EXAGONAL M5x10	HEXAGONAL BOLT M5x10	2	2	2								

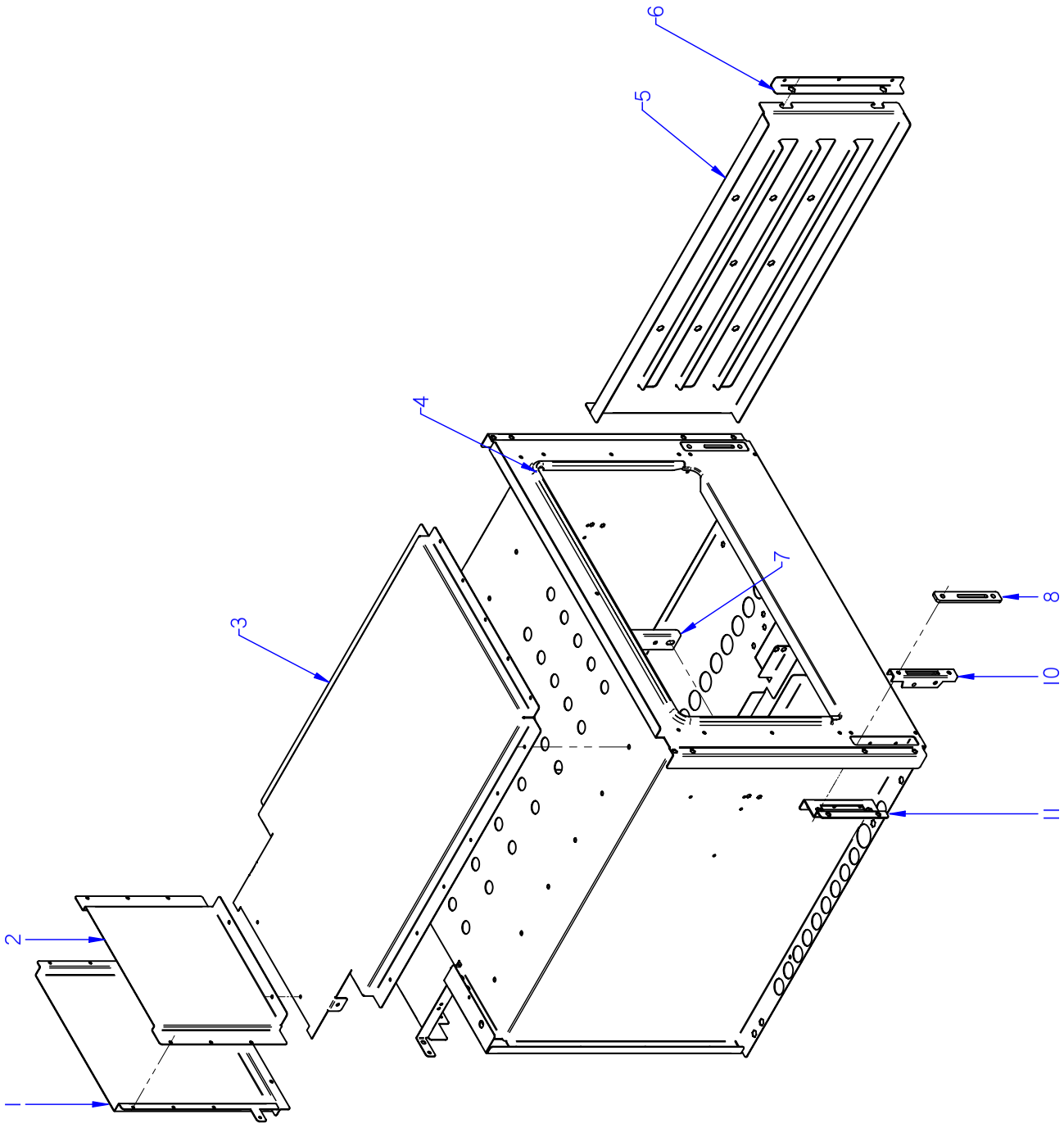

ITEM MARCADO EN COLOR = REPUESTO RECOMENDADO
COLOURED ITEM = RECOMMENDED SPARE PART

Nº plano / N º plane	Firma	Fecha / Date	Denominación / Denomination: HORNO / OVEN	Lamina / Sheet	
C-2874		2011-10	COCINA CG9-11 AD	5	Fagor Industrial S.Coop. Onate

MOD.	COCINAS / RANGES	ZONA / ZONE	HORNO / OVEN	PLANO DIAGRAM	C-2874

ITEM	CODIGO REFERENCE	DENOMINACION	DENOMINATION	CG9-11 AD								ELIMINADO ELIMINATED	INTRODUCID. INTRODUCED	NOTAS
1	U965604000	POSTERIOR CHIMENEA AD	REAR FLUEPIPE AD	1										
	Q419005000	REMACHE 4x8 ALMG3 / ALUMINIO	RIVET 4X8 ALMG3 / ALUMINIUM	14										
2	U965603000	CHIMENEA ANTERIOR AD	FRONT FLUEPIPE AD	1										
3	U965602000	CAMARA DE HUMOS AD	SMOKE CHAMBER AD	1										
	Q419005000	REMACHE 4x8 ALMG3 / ALUMINIO	RIVET 4X8 ALMG3 / ALUMINIUM	19										
4	U965613000	JUNTA HORNO FIBRA DE VIDRIO	FURNACE FIBERGLASS BOARD	1										
5	U915607000	GUIA LATERAL HORNO G700	OVEN SIDE GUIDE G700	2										
	Q151336000	TORNILLO SOPORTE GUIAS	GUIDE SUPPORT BOLT	4										
	Q302022000	ARANDELA 16X6X1.2 A.304	WASHER 16X6X1.2 A.304	4										
	Q221321000	REMACHE ROSCAD.NUTSERT.M6	THREADED RIVET .NUTSERT.M6	4										
6	U915616000	SUPLEMENTO AMARRE GUIA LAT.	SIDE GUIDE FAST. SUPPL.	2										
	Q412000000	REMACHE TUBULAR 4x8	TUBULAR RIVET 4x8	6										
7	U055644000	FIJACION BULBO	FASTENING BULB	1										
	Q412000000	REMACHE TUBULAR 4x8	TUBULAR RIVET 4x8	2										
8	U915619000	EMBELLECED GUIA BISAGRA	HINGE GUIDE TRIM	2										
	Q152045000	TORNILLO AMARRE M6X25	FASTENING BOLT M6X25	4										
9	U010512000	GUIA DE BISAGRA	HINGE GUIDE	2										
10	U915604000	AMARRE GUIA BISAGRA HORNO	OVEN HINGE GUIDE FASTENING	2										
	Q221342000	REMACHE EXAGONAL M5	HEXAGONAL RIVET M5	2										
	Q412000000	REMACHE TUBULAR 4x8	TUBULAR RIVET 4x8	6										
	Q222042000	REMACHE EXAGONAL ROSCA M6	HEXAGONAL RIVET THREAD M6	4										

MOD.	COCINAS / RANGES	ZONA / ZONE	VARIOS / MISCELLANEOUS	PLANO DIAGRAM	

ITEM	CODIGO REFERENCE	DENOMINACION	DENOMINATION	CG9-05 AD	CG9-10 AD	CG9-11 AD						ELIMINADO ELIMINATED	INTRODUCID. INTRODUCED	NOTAS
	U026508000	FOLLETO DE INSTRUCIONES CG	INSTRUCTION LEAFLET CG	1	1	1								
	U023001000	ESQUEMA TEORICO ADHESIVO AD	THEOR. DIAGRAM LABEL AD	1	1	1								PLANO HB-80558
	Z603041000	CABLE ALIMENTACION	POWER WIRING	1	1	1								
	U963006000	CABLE. ENCENDEDOR ENCIMERA	TOP LIGHTER WIRING	1	_	_								
	U333003000	CABLE MASA ENCENDEDOR	LIGHTER EARTH CABLE	1	1	2								
	U963004000	CABLEADO ENCENDEDOR HORNO	OVEN LIGHTER WIRING	_	1	1								
	U963005000	CABLEADO ENCENDEDOR HORNO	OVEN LIGHTER WIRING	_	_	1								
	U023002000	CABLEADO TIERRA CG 9-41	CG 9-41 EARTH WIRING	_	_	1								

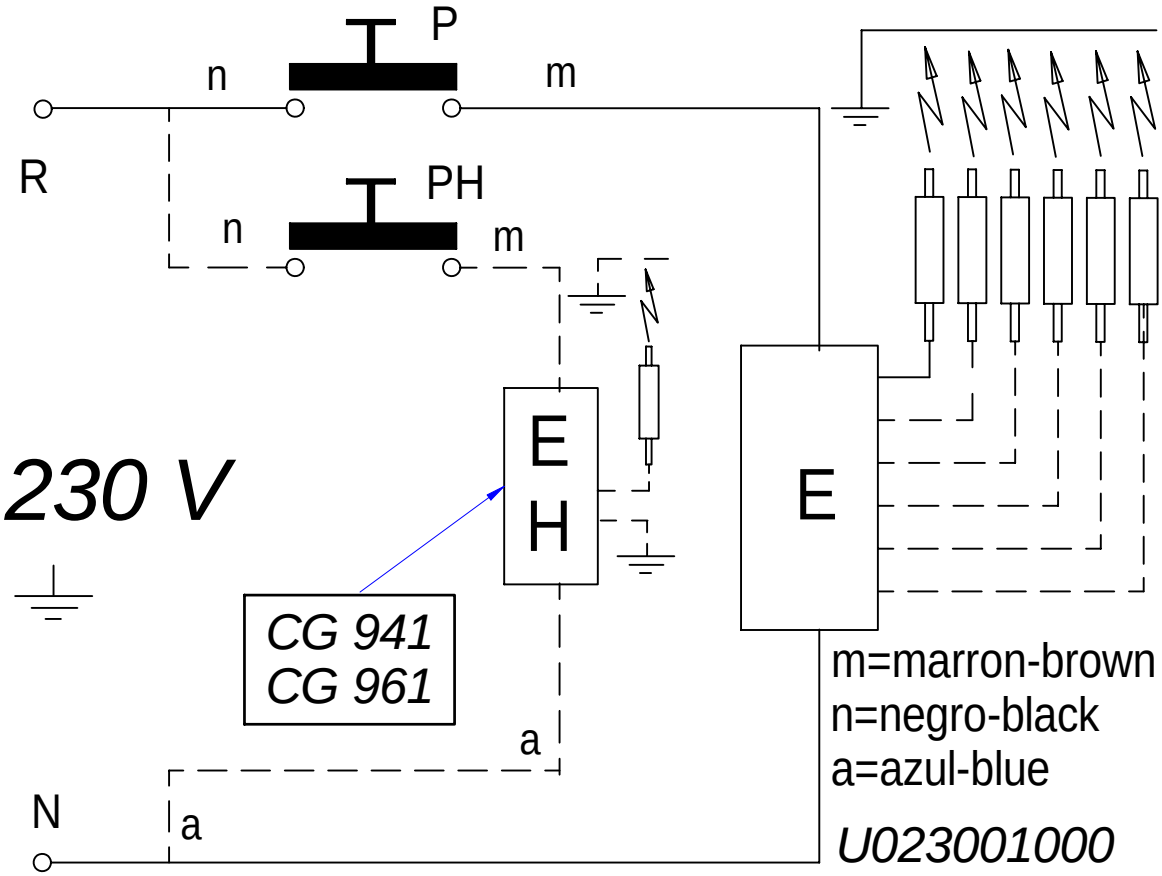

-	Eskema teorikoa: ADVANCE	-	-	U023001000	-
Zk./Nº	Pieza	Cant.	Materiala/Material	Klas. zk/Nº Clas.	Gainazal akabera/Tratamiento
Zk./Nº	Aldaketa/Modificaciones		Nork proposatua/Propuesta de	Data/Fecha	Perdoi orokorrak Tolerancias generales
-	-		-	-	
-	-		-	-	< 5 ± 0.2 / 50 ÷ 100 ± 0.8
-	-		-	-	5 ÷ 25 ± 0.4 / >100 ± 1
-	-		-	-	25 ÷ 50 ± 0.6 / α ± 1
-	-		-	-	

	Sinadura/Firma	Data/Fecha		Gainazal perdoia Mecanizado superficial
Marraztua/Dibujado	**e.carrascal**	**2008-11-25**	FAGOR Fagor Industrial,Koop.Elk, Mugatua	—
Proiektatua/Proyectado	**e.carrascal**	**2008-11-25**		
Egiaztatua/Comprobado	I.Alberdi	**2008-11-25**		

Eskala/Escala	EGOSKETA	Plano Zk./Plano Nº
-		HB-80558
		- Zk. ord. du
	Plano hau ezin daiteke erabili, ez berriztatu, gure baimenik gabe.	- Zk.gaitik ord.