Mod./Type:	_70/... TPPCG...	cod./num.	2531669.00
	_90/... TPPCG...	data/date:	13/06/2014

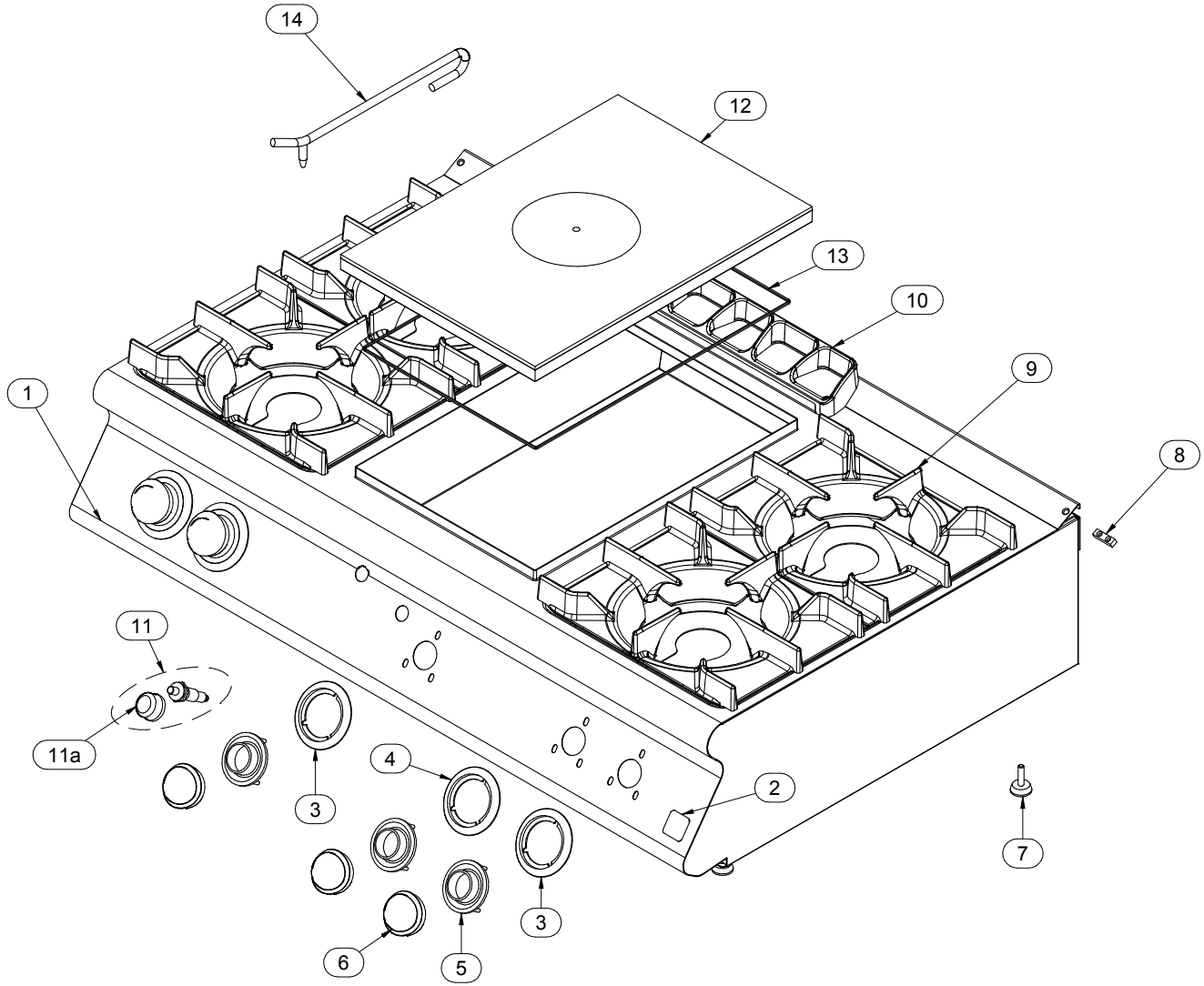

Mod./Type: **_70/... PCG - CFG - CFGE - CFGG - TP...G EXTREME**
_90/... PCG - CFG - CFGE - CFGG - TP...G EXTREME

cod./num. 2531582.00

data/date: 15/04/2014

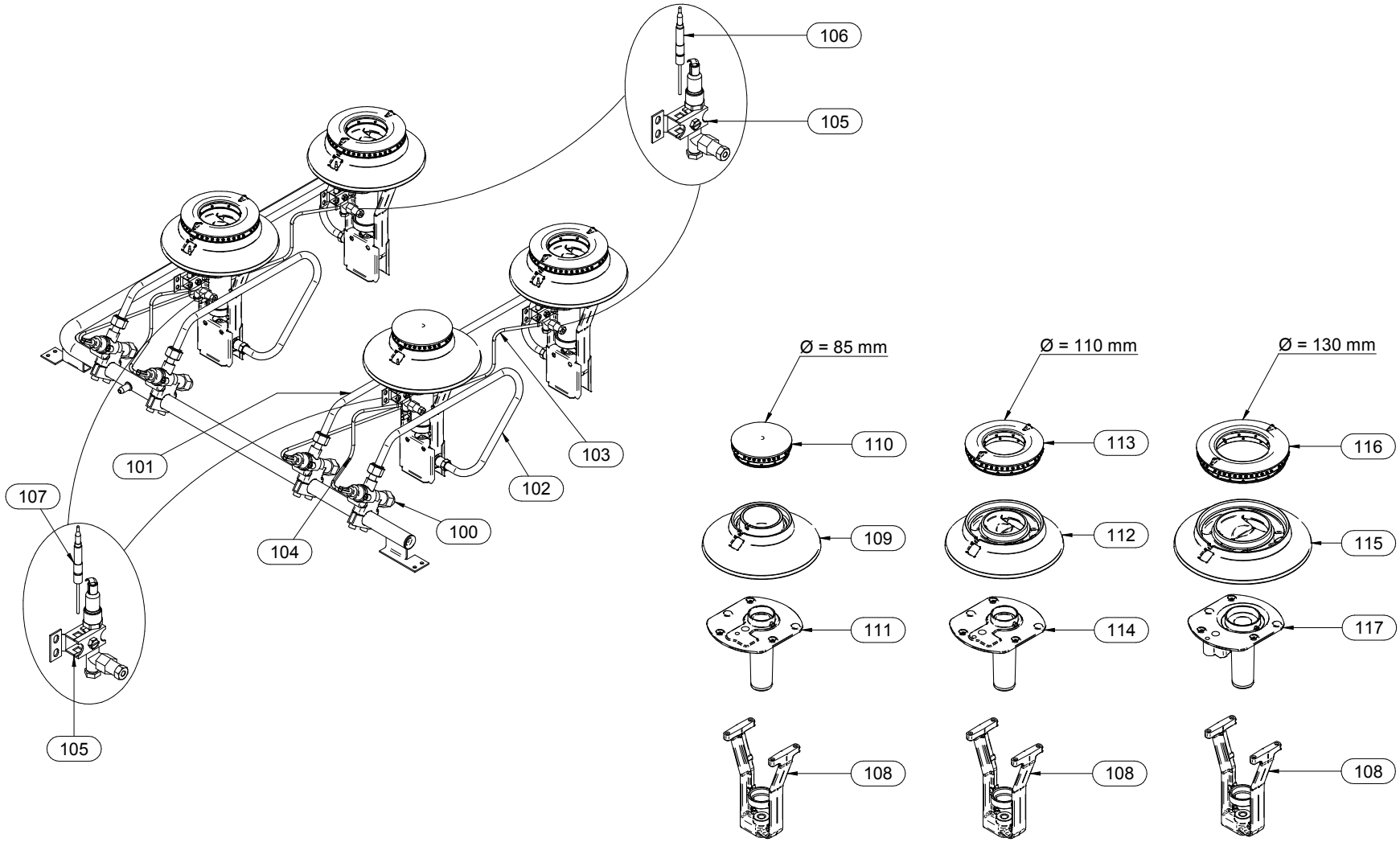

Mod./Type:	_70/40 TPG... - _70/... TP...G... _90/40 TPG... - _90/... TP...G...	cod./num.	2531667.00
		data/date:	13/06/2014

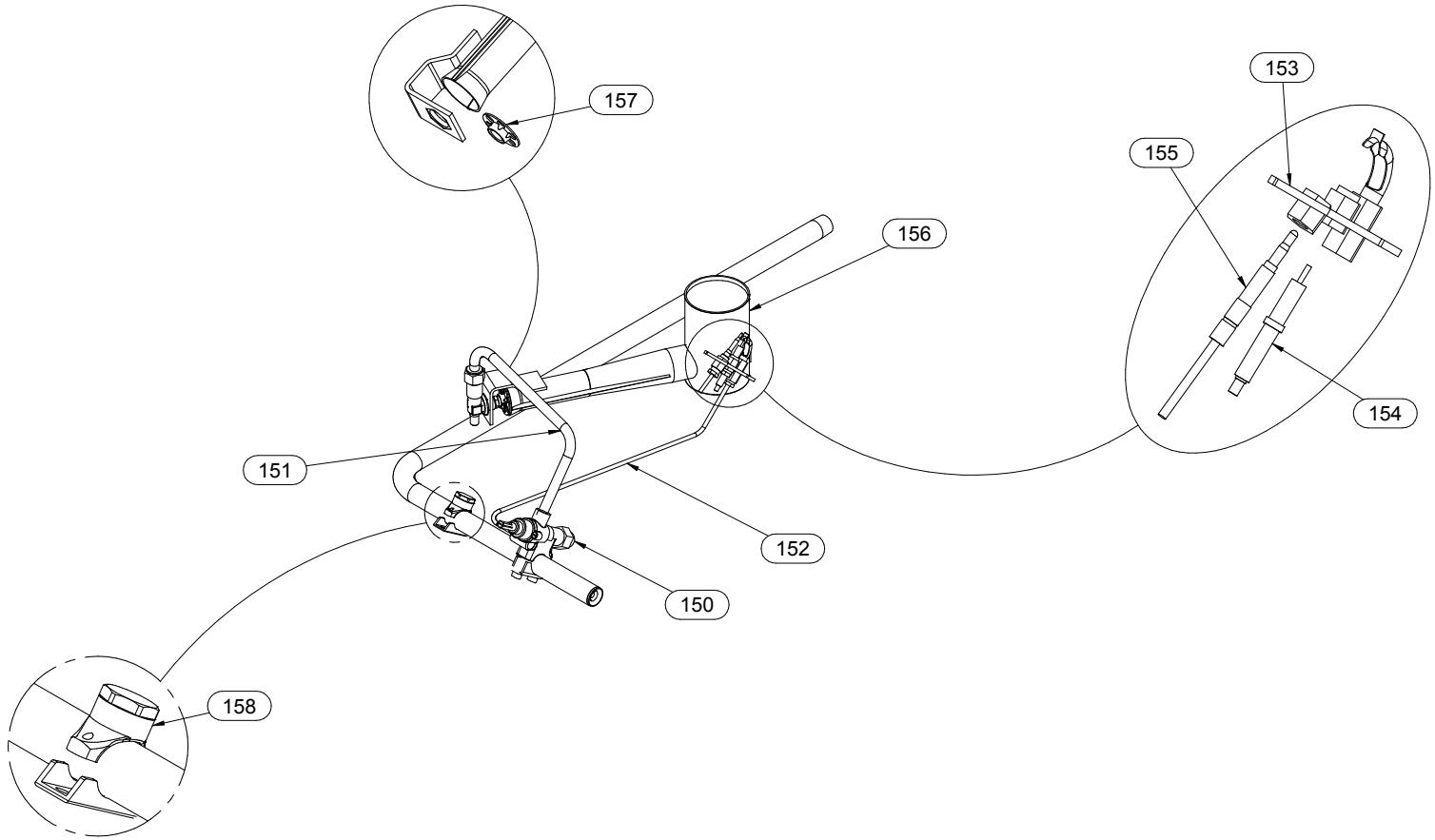

Mod./Type: **_70 - _90 .../40 ... - .../80 ... - .../120 ...**

VANO / CABINET - ...B - ...BE - ...BH2

cod./num. 2531578.00

data/date: 05/06/2014

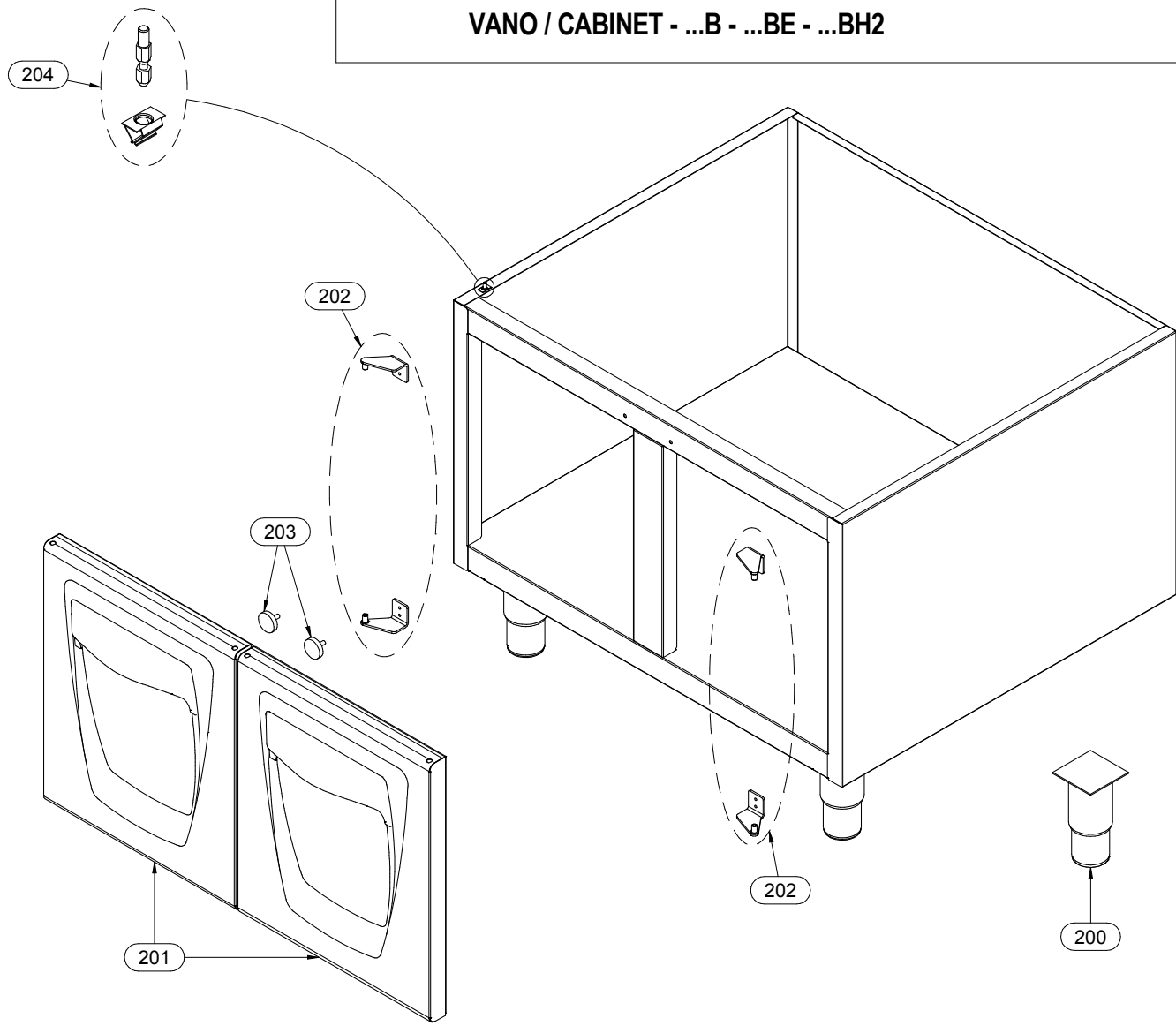

Mod.:	_70/... TPPCG... _90/... TPPCG...			cod. / num. 2531670.00 data / date 06/06/2014 rif. / ref. 2531669.00		RC.AMB.CONSIGLIATI - RECOMMENDED SPARE PARTS - PIECES DETACHEES RECOMMANDÉES - EMPFOHLENEN ERSATZTEILE	EM770/80 TPPCG	EM770/80 TPPCGL	EM770/120 TPPCG2	EM990/80 TPPCG	EM990/80 TPPCGL	EM990/120 TPPCG2	NOTE	
POS.	DESCRIZIONE	DESCRIPTION	DENOMINATION	BENENNUNG	COD.		Q. ty							
1	CRUSCOTTO	CONTROL PANEL	BANDEAU	BEDIENBLENDE	9111341.00		1			1				
					9111346.00			1			1			
					9111384.00				1			1		
2	MARCHIO	BRAND NAME	MARQUE	MARKENZEICHEN	982.021.00		1	1	1	1	1	1	**FROM: 15.12.2011**	**TO: 31.01.2014**
					982.023.00		1	1	1	1	1	1	**FROM: 01.02.2014**	**TO:...**
3	SERIGRAFIA	SCREEN PRINT	SÉRIGRAPHIE	SIEBDRUCK	910.163.00		2	2	3	2	2	3		
4	SERIGRAFIA	SCREEN PRINT	SÉRIGRAPHIE	SIEBDRUCK	910.164.00		1	1	2	1	1	2		
5	LABIRINTO	LABYRINTH	LABYRINTHE	LABYRINTH	256.235.00		3	3	5	3	3	5		
6	MANOPOLA	KNOB	BOUTON	DREHKNOPF	256.217.00	*	3	3	5	3	3	5		
7	PIEDINO	FOOT	PIED	STELLFUSS	951.083.00		4	4	4	4	4	4	SOLO VERSIONE (-T)	ONLY (-T) VERSION
8	PIASTRINA GIUNZIONE	FIXING PLATE	PLAQUETTE FIXAGE	BEFESTIGUNGSPLATTE	941.130.00		1	1	1	1	1	1		
9	GRIGLIA	GRID	GRILLE	ROST	681.059.00		2	2	4					
					981.071.00					2	2	4		
10	GRIGLIA CAMINO	FLUE GRIDDLE	GRILLE POUR CHEMINÉE	KAMINROST	982.013.00		1	1	1	1	1	1		
11	ACCENDITORE PIEZO	PIEZO LIGHTER	ALLUMEUR PIEZO	PIEZOZÜNDER	912.091.00	*	1	1	1	1	1	1		
11a	CAPPUCCIO	CAP	CAPUCHON	KAPPE	951.047.00		1	1	1	1	1	1		
12	PIASTRA	SOLID TOP	PLAQUE COUP DE FEU	KOCHFELD	681.085.00		1	1	1					
					981.085.00					1	1	1		
13	GUARNIZIONE	WASHER	GUARNITURE	DICHTUNGSRING	953.004.00		2	2	2	2,5	2,5	2,5	U. M. metri	U. M. meters
14	GANCIO	HOOK	CROC	HAKEN	683.028.00		1	1	1	1	1	1		
15														
16														
17														
18														
19														
20														
21														
22														
23														
24														
25														
26														
27														
28														
29														
30														
31														
32														
33														
34														

Mod.:	_70/... PCG - CFG - CFGG - CFGE - TP...G _90/... PCG - CFG - CFGG - CFGE - TP...G EXTREME			cod. / num. 2531583.00 data / date 15/04/2014 rif. / ref. 2531582.00		_70/40 PCG...	_70/80 PCG... - ...CFG...	_70/120 PCG... - ...CFG...	_90/40 PCG...	_90/80 PCG... - ...CFG...	_90/120 PCG... - ...CFG...	_90/160 PCG... - ...CFG....	_70/80 TPPCG... - ...TPPFG	_70/120 TPPCG2... - ...TPPCFG2	_90/80 TPPCG.. - ...TPPFG	_90/120 TPPCG2... - ...TPPCFG2	NOTE
POS.	DESCRIZIONE	DESCRIPTION	DENOMINATION	BENENNUNG	COD.	Q. ty											
100	RUBINETTO GAS	GAS TAP	ROBINET GAZ	GASHAHN	671.088.00	2	4	6	2	4	6	8	2	4	2	4	
101	TUBO GAS	GAS PIPE	TUBE GAZ	GASROHR	256.219.00	1	2	3					1	2			
					256.250.00				1	2	3	4			1	2	
102	TUBO GAS	GAS PIPE	TUBE GAZ	GASROHR	256.220.00	1	2	3					1	2			
					256.251.00				1	2	3	4			1	2	
103	TUBO GAS	GAS PIPE	TUBE GAZ	GASROHR	256.221.00	1	2	3					1	2			
					256.252.00				1	2	3	4			1	2	
104	TUBO GAS	GAS PIPE	TUBE GAZ	GASROHR	256.222.00	1	2	3					1	2			
					256.253.00				1	2	3	4			1	2	
105	GRUPPO PILOTA	PILOT GROUP	GROUPE VEILLEUSE	ZÜNDBRENNER GRUPPE	972.021.00	2	4	6	2	4	6	8	2	4	2	4	
106	TERMOCOPPIA POSTERIORE	REAR THERMOCOUPLE	THERMOCOUPLE POSTERIEURE	HINTERES THERMOELEMENT	672.099.00	1	2	3	1	2	3	4	1	2	1	2	
107	TERMOCOPPIA ANTERIORE	FRONT THERMOCOUPLE	THERMOCOUPLE ANTERIEURE	VORDERES THERMOELEMENT	672.025.00	1	2	3	1	2	3	4	1	2	1	2	
108	PORTAUGELLO	NOZZLE HOLDER	PORTE-INJECTEUR	SPRITZDÜSE-TRÄGER	982.020.00	2	4	6	2	4	6	8	2	4	2	4	
109	BRUCIATORE 3,5kW	BURNER 3,5kW	BRULEUR 3,5kW	BRENNER 3,5kW	972.018.00	1	1	1	-	-	-	-	-	1	-	-	
110	SPARTIFIAMMA	FLAMESPREADER	CHAPEAU BRULEUR	FLAMMENTEILER	972.022.00	1	1	1	-	-	-	-	-	1	-	-	
111	SUPPORTO BRUCIATORE	SUPPORT FOR BURNER	SUPPORT BRÛLEUR	TRÄGER FÜR BRENNER	982.017.00	1	1	1	-	-	-	-	-	1	-	-	
112	BRUCIATORE 6kW	BURNER 6kW	BRULEUR 6kW	BRENNER 6kW	972.019.00	1	3	5	1	1	2	2	2	3	1	1	
113	SPARTIFIAMMA	FLAMESPREADER	CHAPEAU BRULEUR	FLAMMENTEILER	972.023.00	1	3	5	1	1	2	2	2	3	1	1	
114	SUPPORTO BRUCIATORE	SUPPORT FOR BURNER	SUPPORT BRÛLEUR	TRÄGER FÜR BRENNER	982.018.00	1	3	5	1	1	2	2	2	3	1	1	
115	BRUCIATORE 10kW	BURNER 10kW	BRULEUR 10kW	BRENNER 10kW	972.020.00	-	-	-	1	3	4	6	-	-	1	3	
116	SPARTIFIAMMA	FLAMESPREADER	CHAPEAU BRULEUR	FLAMMENTEILER	972.024.00	-	-	-	1	3	4	6	-	-	1	3	
117	SUPPORTO BRUCIATORE	SUPPORT FOR BURNER	SUPPORT BRÛLEUR	TRÄGER FÜR BRENNER	982.011.00	-	-	-	1	3	4	6	-	-	1	3	
118																	
119																	
120																	
121																	
122																	
123																	
124																	
125																	
126																	
127																	
128																	
129																	
130																	
131																	
132																	
133																	
134																	
135																	
136																	
137																	
138																	
139																	
140																	

Mod.:	_70/40 TPG... - _70/… TP...G… _90/... TP...G…			cod. / num. 2531668.00 data / date 12/06/2014 rif. / ref. 2531667.00		_70/40 TPG...	_70/... TP...G...	_90/... TP...G...	NOTE
POS.	DESCRIZIONE	DESCRIPTION	DENOMINATION	BENENNUNG	COD.	Q.ty			
150	RUBINETTO GAS	GAS TAP	ROBINET GAZ	GASHAHN	671.088.00	1	1	1	
151	TUBO GAS	GAS PIPE	TUYAU DE GAZ	GASLEITUNG	256.232.00	1	1		
					256.278.00			1	
152	TUBO GAS	GAS PIPE	TUYAU DE GAZ	GASLEITUNG	256.233.00	1	1		
					256.279.00			1	
153	GRUPPO PILOTA	PILOT GROUP	GROUPE VEILLEUSE	ZÜNDBRENNER GRUPPE	672.173.00	1	1	1	
154	CANDELA ACCENSIONE	IGNITION ELECTRODE	BOUGIE D'ALLUMAGE	KERZE SCHNELLBRENNER	256.060.00	1	1	1	
155	TERMOCOPPIA	THERMOCOUPLE	THERMOCOUPLE	THERMOELEMENT	672.025.00	1	1	1	
156	BRUCIATORE	BURNER	BRULEUR	BRENNER	972.044.00	1	1	1	
157	AERATORE	AERATOR	AÉRATEUR	LÜFTER	941.124.00	1	1	1	
158	TAPPO	PLUG	BOUCHON	STOPFEN	671.090.00	1	1	1	
159									
160									
161									
162									
163									
164									
165									
166									
167									
168									
169									
170									
171									
172									
173									
174									
175									
176									
177									
178									
179									
180									
181									
182									
183									
184									

Mod.:	_70/... - _90/… VANO / CABINET …B - …BE - …BH2			cod. / num. 2531579.00 data / date 05/06/2014 rif. / ref. 2531578.00		RICAMBI CONSIGLIATI - RECOMMENDED SPARE PARTS - PIÈCES DÉTACHÉES RECOMMANDÉES - EMPFOHLENEN ERSATZTEILE	EM70/40 ...	EM70/80 ...	EM70/120 ...	EM90/40 ...	EM90/80 ...	EM90/120 ...	NOTE	
POS.	DESCRIZIONE	DESCRIPTION	DENOMINATION	BENENNUNG	COD.		Q. ty							
200	PIEDINO	FOOT	PIED	STELLFUSS	912.090.00		4	4	4	4	4	4	FROM: 15.12.2011	TO: 17.05.2013
					912.090.14		4	4	4	4	4	4	FROM: 18.05.2013	TO:...
201	PORTA	DOOR	PORTE	TÜR	256.215.00		1	2	3	1	2	3		
202	COPPIA CERNIERE	GASKETS PAIR	COUPLE CHARNIÈRES	SCHARNIERPAAR	256.216.00		1	2	3	1	2	3		
203	MAGNETE	MAGNET	MAGNÉTO	MAGNET	684.007.00		1	2	3	1	2	3	FROM: 15.12.2011	TO: 01.01.2014
					984.006.00		1	2	3	1	2	3	FROM: 02.01.2014	TO:...
204	FISSAGGIO	FIXING	FIXAGE	BEFESTIGUNG	256.431.00		4	4	4	4	4	4	FROM: 04.05.2015	TO:...
205														
206														
207														
208														
209														
210														
211														
212														
213														
214														
215														
216														
217														
218														
219														
220														
221														
222														
223														
224														
225														
226														
227														
228														
229														
230														
231														
232														
233														
234														