Mod./Type: **_70/... P...50 - _90/... P...50 EXTREME**	cod./num. 2531790.00
FROM: 01.04.2014 TO:...	data/date: 28/07/2014

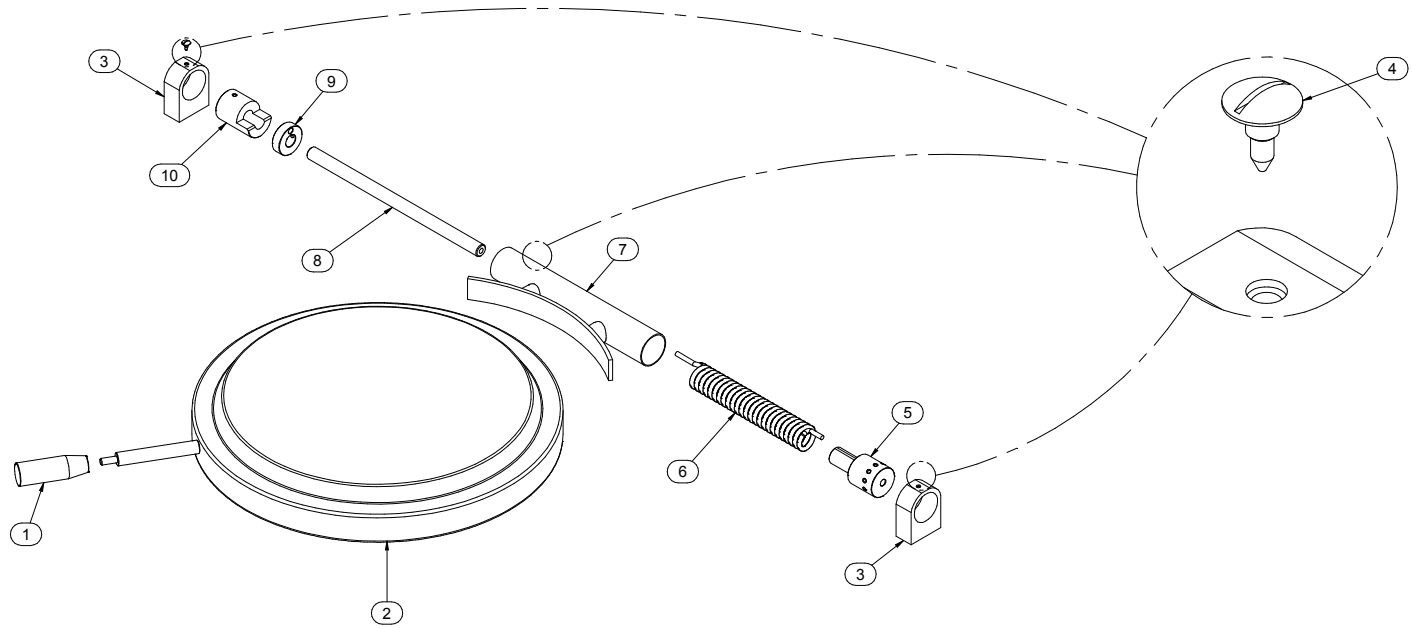

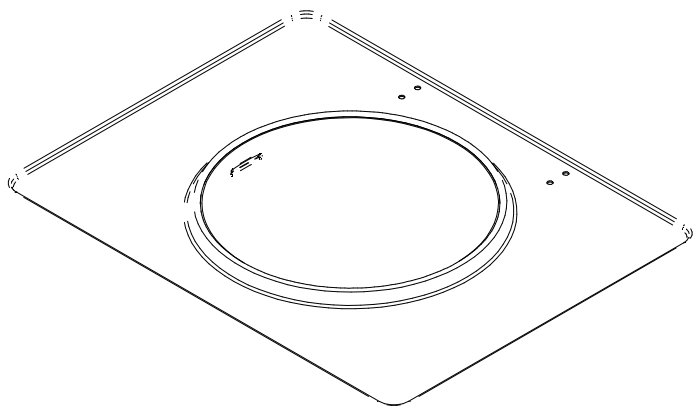

Mod./Type:	_90/... P...100... - _90/... P...150... EXTREME	cod./num.	2531792.00
	FROM: 01.04.2014 TO:...	data/date:	29/07/2014

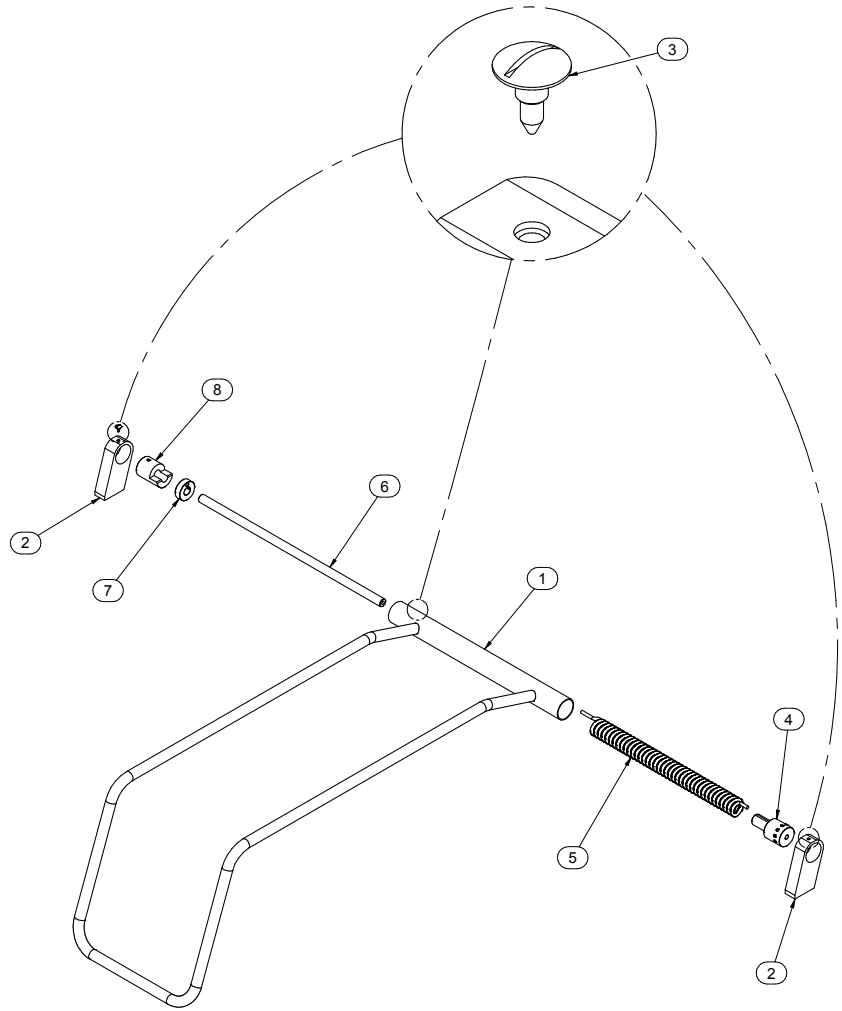

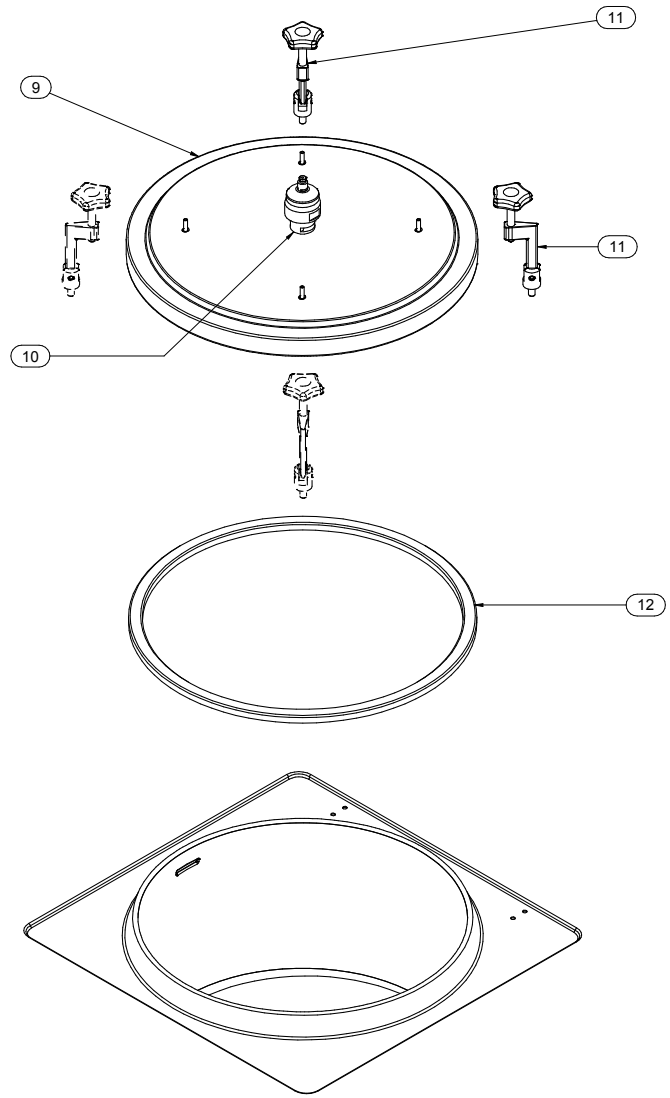

Mod./Type: _90/... PEI50 - ... PEI100... - ... PEI150...
FROM: 01.04.2014 TO:...

cod./num. 2531869.00
data/date: 27/01/2015

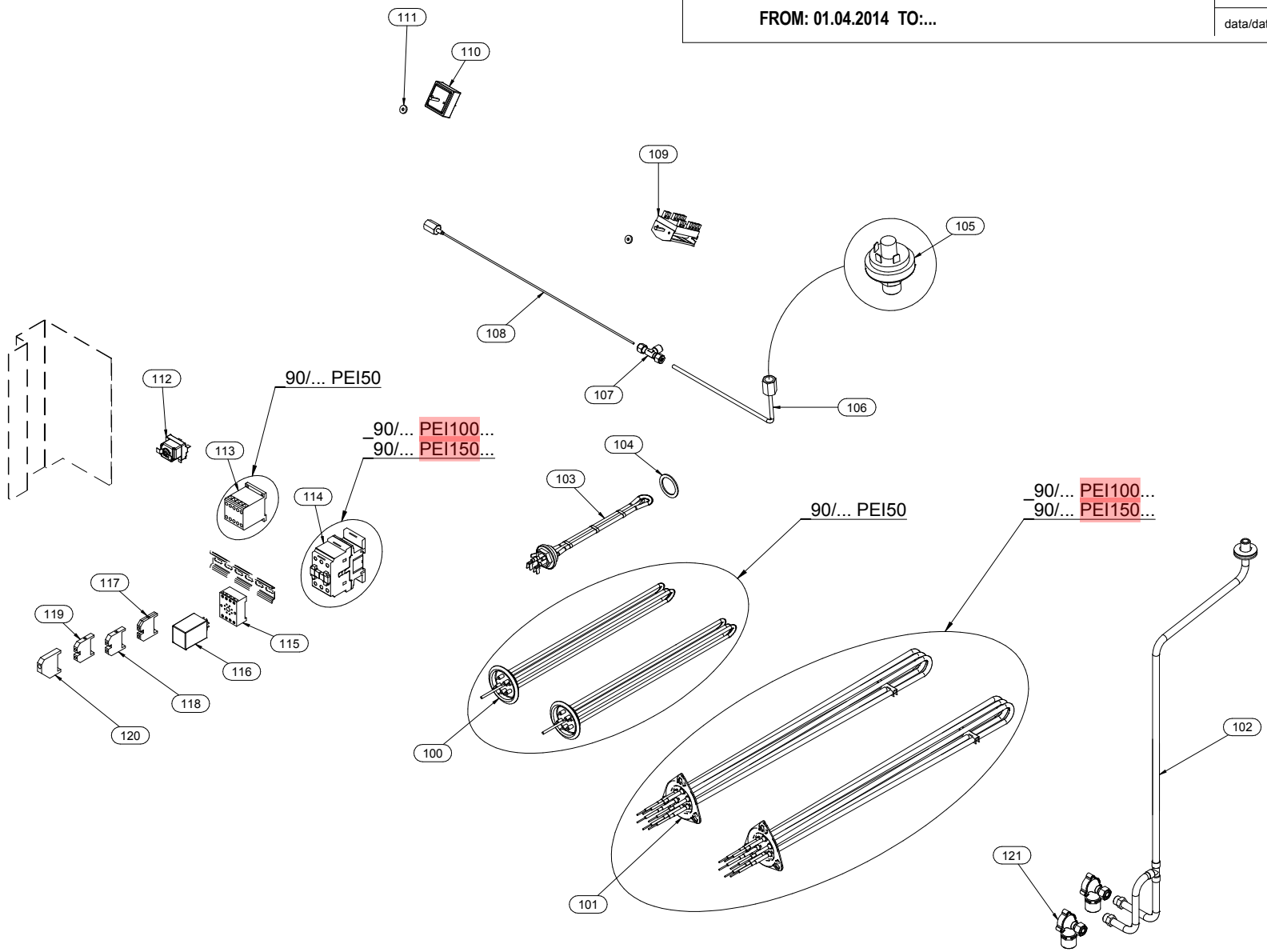

Mod./Type:	_90/... PED100... - _90/... PED150...	cod./num.	2532045.00
	FROM: 01.04.2014 TO:...	data/date:	28/01/2015

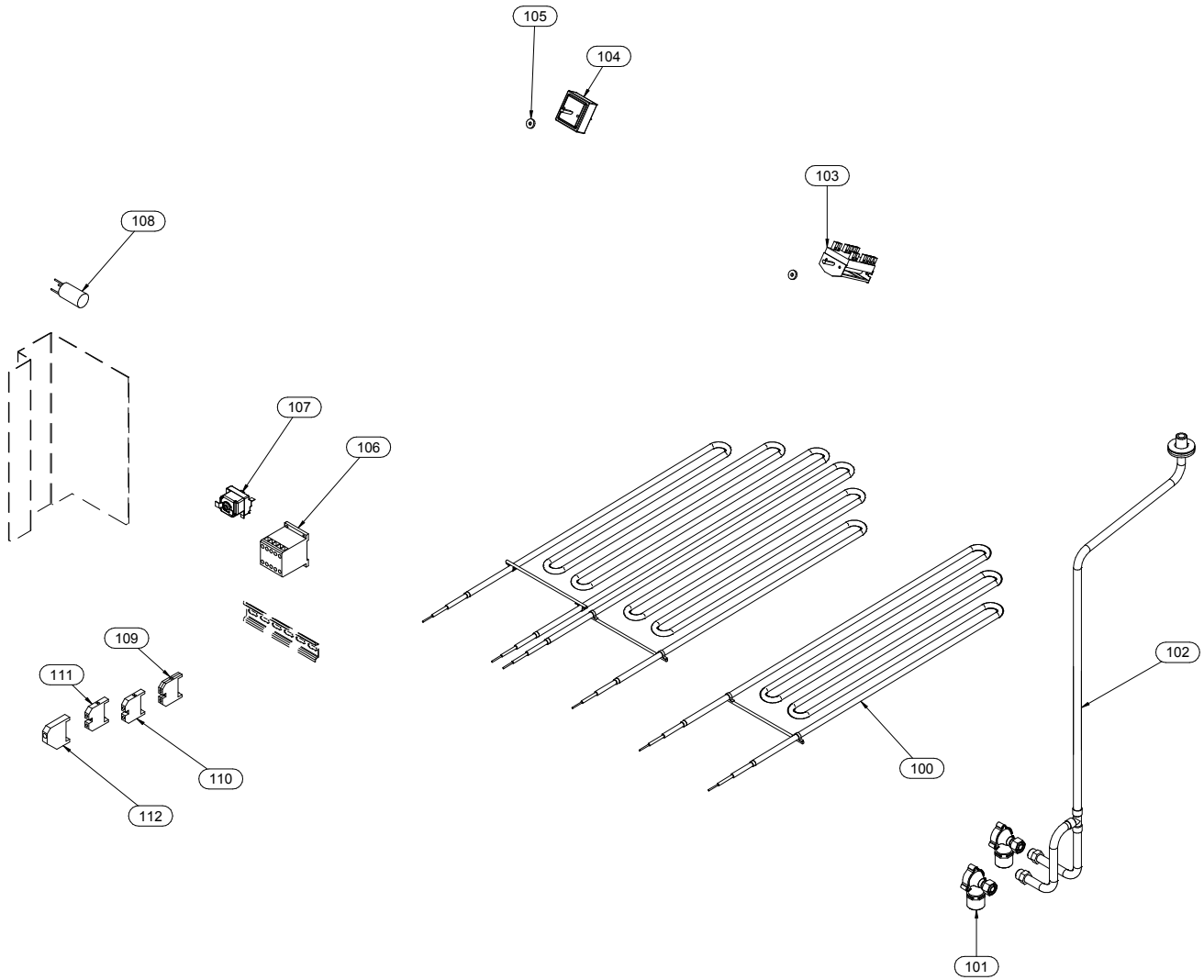

Mod./Type: _90/... PEI50 EXTREME

FROM: 01.04.2014 TO:...

cod./num. 2531867.00

data/date: 24/09/2014

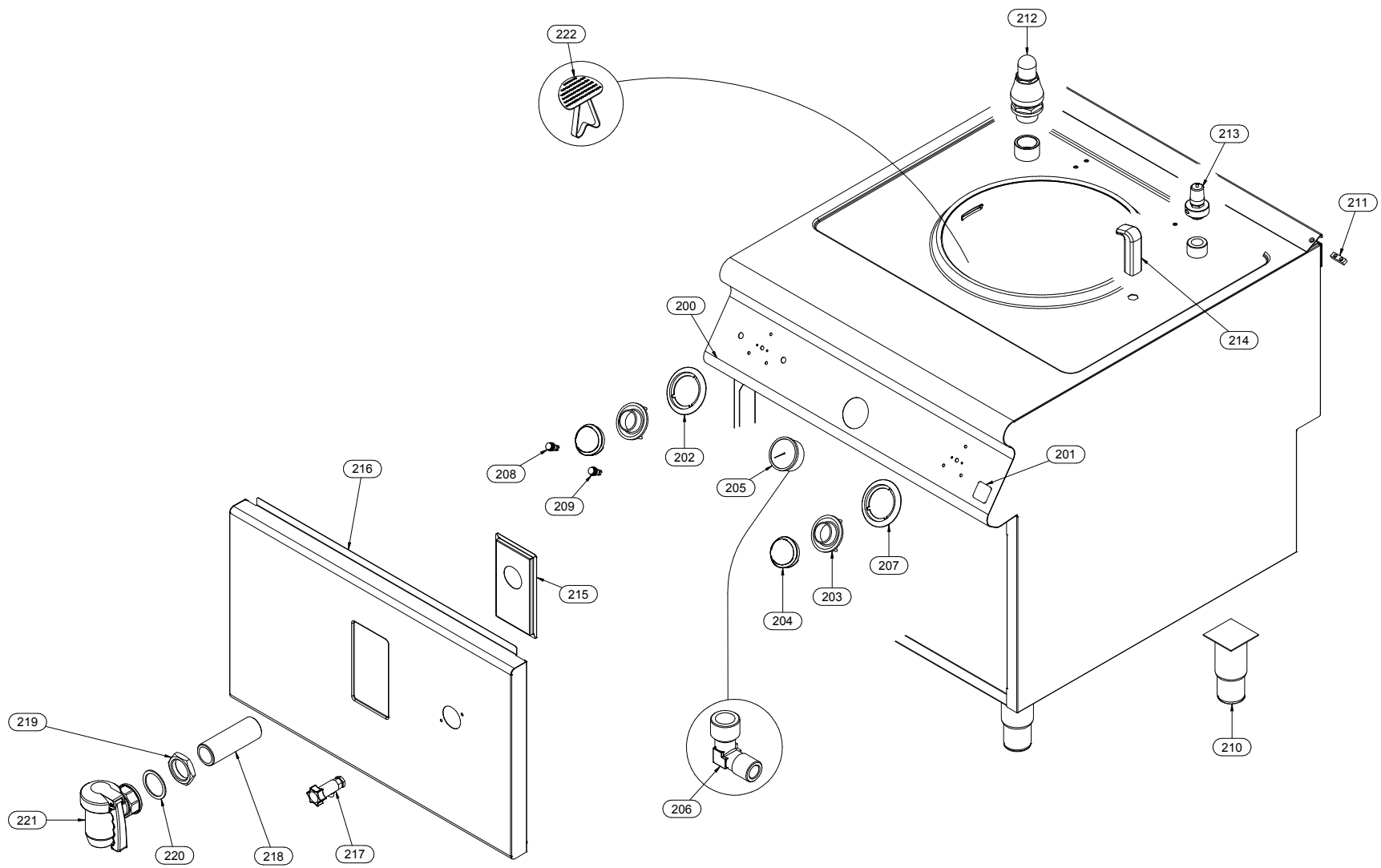

Mod./Type:	_90/... PEI100... - _90/... PEI150...	cod./num.	2531778.00
	FROM: 01.04.2014 TO:...	data/date:	28/01/2015

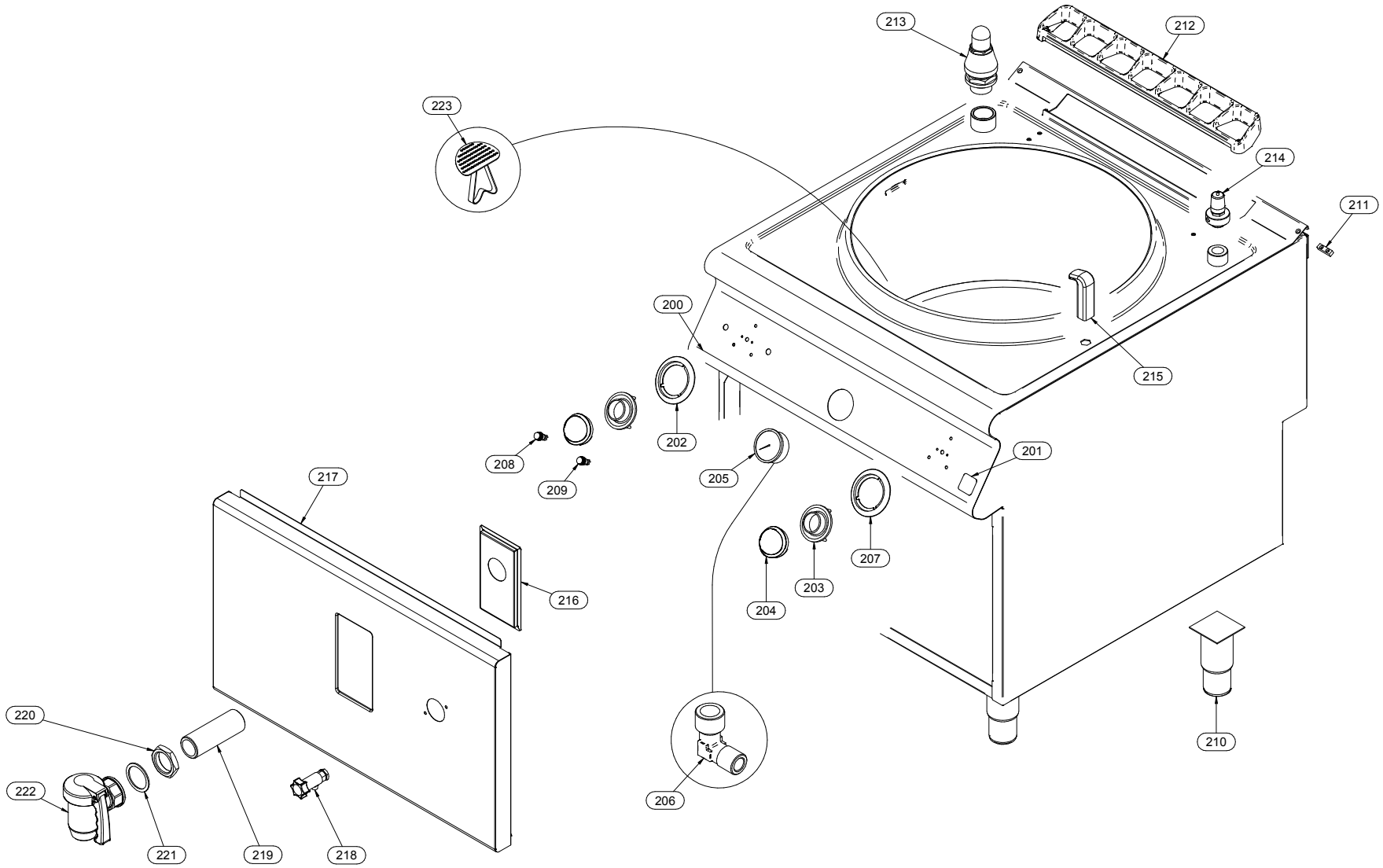

Mod./Type:	_90/... PED100... - _90/... PED150...	cod./num.	2531985.00
	FROM: 01.04.2014 TO:...	data/date:	28/01/2015

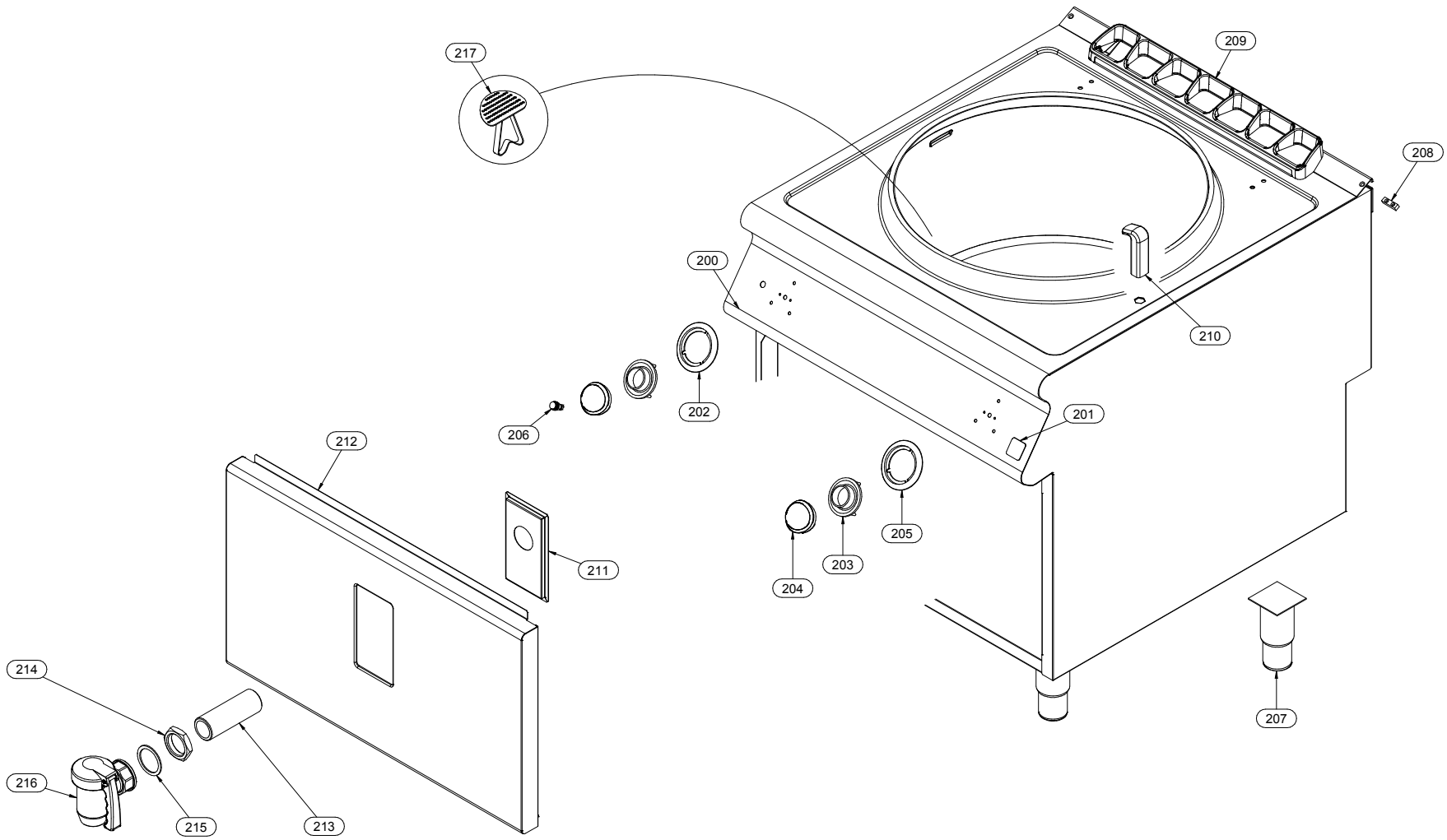

Mod.:	_70/… P…50 - _90/... P…50 EXTREME FROM: 01.04.2014 TO:…			cod. / num. 2531791.00 data / date 28/07/2014 rif. / ref. 2531790.00		RICAMBI CONSIGLIATI - RECOMMENDED SPARE PARTS - PIÈCES DETACHÉES RECOMMANDÉES - EMPFOHLENEN ERSATZTEILE	_70/80 PG...50	_90/80 PE...50	_90/80 PG...50	_90/80 PE...50	NOTE
POS.	DESCRIZIONE	DESCRIPTION	DENOMINATION	BENENNUNG	COD.		Q. ty				
1	MANIGLIA	HANDLE	POIGNÉE	HANDGRIFF	651.012.00		1	1	1	1	
2	COPERCHIO	LID	COUVERCLE	DECKEL	256.332.00		1	1	1	1	
3	SUPPORTO	SUPPORT	SUPPORT	UNTERSTÜTZUNG	641.149.00		2	2	2	2	
4	VITE REGOLAZIONE	REGULATION SCREW	VIS DE REGULATION	EINSTELLSCHRAUBE	941.140.00		3	3	3	3	
5	BOCCOLA	PLAIN BEARING	PALIER LISSE	BUCHSE	941.139.15		1	1	1	1	
6	MOLLA	SPRING	RESSORT	FEDER	260.119.00		1	1	1	1	
7	CERNIERA	JOINT	CHARNIERE	SCHARNIER	6111636.00		1	1	1	1	
8	PERNO CERNIERA	JOINT STUD	GOUJON DE LA CHARNIÈRE	SCHARNIERBOLZEN	641.150.00		1	1	1	1	
9	BOCCOLA CERNIERA	PLAIN BEARING HINGE	PALIER LISSE CHARNIÈRE	BUCHSE DES SCHARNIER	941.137.00		1	1	1	1	
10	BOCCOLA	PLAIN BEARING	PALIER LISSE	BUCHSE	941.138.00		1	1	1	1	
11											
12											
13											
14											
15											
16											
17											
18											
19											
20											
21											
22											
23											
24											
25											
26											
27											
28											
29											
30											
31											
32											
33											
34											
35											
36											
37											

Mod.:	_90/… P…100... - _90/... P…150… EXTREME FROM: 01.04.2014 TO:…			cod. / num. 2531793.00 data / date 28/07/2014 rif. / ref. 2531792.00		_90/80 PG...100	_90/80 PG...100A	_90/80 PG...150	_90/80 PG...150A	_90/80 PE...100	_90/80 PE...100A	_90/80 PE...150	_90/80 PE...150A	NOTE
POS.	DESCRIZIONE	DESCRIPTION	DENOMINATION	BENENNUNG	COD.	Q. ty								
1	MANIGLIA	HANDLE	POIGNÉE	HANDGRIFF	9111436.00	1	1	1	1	1	1	1	1	
2	SUPPORTO	SUPPORT	SUPPORT	UNTERSTÜTZUNG	941.135.00	2	2	2	2	2	2	2	2	
3	VITE REGOLAZIONE	REGULATION SCREW	VIS DE REGULATION	EINSTELLSCHRAUBE	941.140.00	3	3	3	3	3	3	3	3	
4	BOCCOLA	PLAIN BEARING	PALIER LISSE	BUCHSE	941.139.00	1	1	1	1	1	1	1	1	
5	MOLLA	SPRING	RESSORT	FEDER	260.116.00	1	1	1	1	1	1	1	1	
6	PERNO CERNIERA	JOINT STUD	GOUJON DE LA CHARNIÈRE	SCHARNIERBOLZEN	941.136.00	1	1	1	1	1	1	1	1	
7	BOCCOLA CERNIERA	PLAIN BEARING HINGE	PALIER LISSE CHARNIÈRE	BUCHSE DES SCHARNIER	941.137.00	1	1	1	1	1	1	1	1	
8	BOCCOLA	PLAIN BEARING	PALIER LISSE	BUCHSE	941.138.00	1	1	1	1	1	1	1	1	
9	COPERCHIO	LID	COUVERCLE	DECKEL	9111656.00	1		1		1		1		
					9111679.00		1		1		1		1	
10	VALVOLA SICUREZZA	SECUTIRY VALVE	SOUPAPE DE SÉCURITÉ	SICHERHEITSVENTIL	678.052.00	-	1	-	1	-	1	-	1	
11	TIRANTE	TIE ROD	TIRANT	SPANNSTANGE	678.087.00	-	1	-	1	-	1	-	1	
12	GUARNIZIONE	WASHER	GUARNITURE	DICHTUNGSRING	953.033.00	-	1	-	1	-	1	-	1	
13														
14														
15														
16														
17														
18														
19														
20														
21														
22														
23														
24														
25														
26														
27														
28														
29														
30														
31														
32														
33														
34														
35														
36														
37														
38														

Mod.:	_90/... PEI50 _90/... PEI100... - _90/... PEI150... FROM: 01.04.2014 TO:...			cod. / num. 2531870.00 data / date 27/01/2015 rif. / ref. 2531869.00		90/80 PEI50	90/80 PEI100 90/80 PEI100A	90/80 PEI150 90/80 PEI150A	NOTE
POS.	DESCRIZIONE	DESCRIPTION	DENOMINATION	BENENNUNG	COD.	Q. ty			
100	RESISTENZA	HEATING ELEMENT	RESISTANCE	HEINZELEMENT	665.022.00	2	-	-	
101	RESISTENZA	HEATING ELEMENT	RESISTANCE	HEINZELEMENT	965.068.00	-	2	2	
102	TUBO EROGATORE	REGULATOR PIPE	TUYEAU REGULATOR	WASSERLAST	931.223.00	1			
					931.214.00		1	1	
103	RESISTENZA	HEATING ELEMENT	RESISTANCE	HEINZELEMENT	965.066.00	1	1	1	
104	GUARNIZIONE RESISTENZA	HEATING ELEMENT GASKET	JOINT DE LA RÉSISTENCE	WIDERSTAND-DICHTUNG	953.031.00	1	1	1	
105	PRESSOSTATO	PRESSURE SWITCH	PRESSOSTAT	NIVEAUSCHALTER	962.001.00	1	1	1	
106	TUBO PRESSOSTATO	PRESSURE SWITCH PIPE	TUYAU PRESSOSTAT	NIVEAUSCHALTERTUBE	631.196.00	1			
					931.217.00		1	1	
107	RACCORDO	CONNECTOR	RACCORD	ANSCHLUSS	678.084.00	1	1	1	
108	TUBO MANOMETRO	PRESSURE GAUGE PIPE	TUYAU MANOMÈTRE	MANOMETER ROHR	931.218.00	1	1	1	
109	COMMUTATORE	CHANGE-OVER SWITCH	COMMUTATEUR	UMSCHALTER	661.117.00	1	1	1	
110	REGOLATORE ENERGIA	ENERGY REGULATOR	REGLEUR D'ENERGIE	ENERGIEREGLER	661.058.00	1	1	1	
111	GUARNIZIONE	WASHER	GUARNITURE	DICHTUNGSRING	953.020.00	2	2	2	
112	TERMOSTATO SICUREZZA	SAFETY THERMOSTAT	THERMOSTAT DE SECURITÉ	TEMPERATURBEGRENZER	961.039.00	1	1	1	
113	CONTATTORE	CONTACTOR	CONTACTEUR	FERNSCHALTER	461.021.00	2	-	-	
114	CONTATTORE	CONTACTOR	CONTACTEUR	FERNSCHALTER	961.043.00	-	2	2	
115	ZOCCOLO RELÉ	RELAY BASE	SOCLE DU RELAIS	RELAIS SOCKEL	961.037.00	1	1	1	
116	RELÉ	RELAY	RELAY	RELAIS	961.036.00	1	1	1	
117	MORSETTO TERRA - PE	PE-TERMINAL	BORNE PE	ERD-KLEMME	663.057.00	1	1	1	
118	MORSETTO GRIGIO	GREY TERMINAL	BORNE GRIS	GRAUE KLEMME	663.058.00	3	3	3	
119	MORSETTO BLU	BLUE TERMINAL	BORNE BLUE	NULL-KLEMME	663.083.00	1	1	1	
120	BLOCCAMORSETTI	TERMINAL STOPPER	BORNE BLOQUANT	BLÖCK-KLEMME	663.059.00	1	1	1	
121	ELETTROVALVOLA ACQUA	SOLENOID VALVE WATER	ELECTROVANNE EAU	WASSERVENTIL	256.347.00	2	2	2	
122									
123									
124									
125									
126									
127									
128									
129									
130									
131									
132									
133									
134									
135									

Mod.:	_90/... PED100... _90/... PED150... FROM: 01.04.2014 TO:...			cod. / num. 2532046.00 data / date 28/01/2015 rif. / ref. 2532045.00		90/80 PED100	90/80 PED100A	90/80 PED150	90/80 PED150A	NOTE
POS.	DESCRIZIONE	DESCRIPTION	DENOMINATION	BENENNUNG	COD.	Q. ty				
100	RESISTENZA	HEATING ELEMENT	RESISTANCE	HEINZELEMENT	965.067.00	3	3	3	3	
101	ELETTROVALVOLA ACQUA	SOLENOID VALVE WATER	ELECTROVANNE EAU	WASSERVENTIL	256.347.00	2	2	2	2	
102	TUBO EROGATORE	REGULATOR PIPE	TUYEAU REGULATOR	WASSERLAST	931.214.00	1	1	1	1	
103	COMMUTATORE	CHANGE-OVER SWITCH	COMMUTATEUR	UMSCHALTER	661.117.00	1	1	1	1	
104	REGOLATORE ENERGIA	ENERGY REGULATOR	REGLEUR D'ENERGIE	ENERGIEREGLER	661.058.00	1	1	1	1	
105	GUARNIZIONE	WASHER	GUARNITURE	DICHTUNGSRING	953.020.00	2	2	2	2	
106	CONTATTORE	CONTACTOR	CONTACTEUR	FERNSCHALTER	461.021.00	2	2	2	2	
107	TERMOSTATO SICUREZZA	SAFETY THERMOSTAT	THERMOSTAT DE SECURITÉ	TEMPERATURBEGRENZER	661.115.00	1	1	1	1	
108	FILTRO ANTIDISTURBO	LIMITER FILTER	FILTRE DE BRUIT	ANTIJAMMING FILTER	464.067.00	3	3	3	3	
109	MORSETTO TERRA - PE	PE-TERMINAL	BORNE PE	ERD-KLEMME	663.057.00	1	1	1	1	
110	MORSETTO GRIGIO	GREY TERMINAL	BORNE GRIS	GRAUE KLEMME	663.058.00	3	3	3	3	
111	MORSETTO BLU	BLUE TERMINAL	BORNE BLUE	NULL-KLEMME	663.083.00	1	1	1	1	
112	BLOCCAMORSETTI	TERMINAL STOPPER	BORNE BLOQUANT	BLÖCK-KLEMME	663.059.00	1	1	1	1	
113										
114										
115										
116										
117										
118										
119										
120										
121										
122										
123										
124										
125										
126										
127										
128										
129										
130										
131										
132										
133										
134										
135										

Mod.:	_90/... PEI50 EXTREME FROM: 01.04.2014 TO:...			cod. / num. 2531868.00 data / date 26/09/2014 rif. / ref. 2531867.00		RICAMBI CONSIGLIATI - RECOMMENDED SPARE PARTS - PIECES DETACHEES RECOMMANDEES - EMPFOHLENEN ERSATZTEILE	EM90/80 PEI50	NOTE
POS.	DESCRIZIONE	DESCRIPTION	DENOMINATION	BENENNUNG	COD.		Q. ty	
200	CRUSCOTTO	CONTROL PANEL	BANDEAU	BEDIENBLENDE	9111435.00		1	
201	MARCHIO	BRAND NAME	MARQUE	MARKENZEICHEN	982.023.00		1	
202	SERIGRAFIA	SCREEN PRINT	SÉRIGRAPHIE	SIEBDRUCK	910.230.00		1	
203	LABIRINTO	LABYRINTH	LABYRINTHE	LABYRINTH	256.235.00		2	
204	MANOPOLA	KNOB	BOUTON	DREHKNOPF	256.234.00	*	2	
205	MANOMETRO	PRESSURE GAUGE	MANOMÈTRE	DRUCKMESSER	678.083.00		1	
206	RACCORDO	CONNECTOR	RACCORD	ANSCHLUSS	678.085.00		1	
207	SERIGRAFIA	SCREEN PRINT	SÉRIGRAPHIE	SIEBDRUCK	910.551.00		1	
208	LAMPADA SPIA ARANCIO	ORANGE INDICATOR LIGHT	LAMPE TEMOIN ORANGE	ORANGE KONTROLLAMPE	963.013.00		1	
209	LAMPADA SPIA ROSSA	RED INDICATOR LIGHT	LAMPE TEMOIN ROUGE	ROTE KONTROLLLAMPE	963.014.00		1	
210	PIEDINO	FOOT	PIED	STELLFUSS	912.090.14		4	
211	PIASTRINA GIUNZIONE	FIXING PLATE	PLAQUETTE FIXAGE	BEFESTIGUNGSPLATTE	941.130.00		1	
212	VALVOLA SICUREZZA	SECUTIRY VALVE	SOUPAPE DE SÉCURITÉ	SICHERHEITSVENTIL	678.049.00		1	
213	VALVOLA	VALVE	SOUPAPE	VENTIL	256.334.00		1	
214	EROGATORE	DISTRIBUTOR	AJUTAGE	SPRÜHDOSE	678.082.00		1	
215	COPERCHIO	LID	COUVERCLE	DECKEL	6211873.00		1	
216	PANNELLO FRONTALE	FRONTAL PANEL	PANNEAU FRONTAL	FRONTPLATTE	6211870.00		1	
217	RUBINETTO	TAP	ROBINET	WASSERHAHN	678.079.00		1	
218	NIPPLO	NIPPLE	RACCORD FILETÉ	NIPPEL	631.195.00		1	
219	DADO	NUT	ÈCROU	MUTTER	678.059.00		1	
220	GUARNIZIONE	WASHER	GUARNITURE	DICHTUNGSRING	653.023.00		1	
221	RUBINETTO	TAP	ROBINET	WASSERHAHN	678.086.00		1	
222	FILTRO SCARICO	EXHAUST FILTER	FILTRE D'ECHAPPEMENT	ABLAUFFILTER	611.373.00		1	
223								
224								
225								
226								
227								
228								
229								
230								
231								
232								
233								
234								
235								
236								
237								
238								
239								
240								

Mod.:	_90/... PEI100… _90/… PEI150… FROM: 01.04.2014 TO:…			cod. / num. 2531779.00 data / date 28/01/2015 rif. / ref. 2531778.00		RICAMBI CONSIGLIATI - RECOMMENDED SPARE PARTS - PIECES DETACHEES RECOMMANDEES - EMPFOHLENEN ERSATZTEILE	EM90/80 PEI100	EM90/80 PEI100A	EM90/80 PEI150	EM90/80 PEI150A	NOTE
POS.	DESCRIZIONE	DESCRIPTION	DENOMINATION	BENENNUNG	COD.		Q. ty				
200	CRUSCOTTO	CONTROL PANEL	BANDEAU	BEDIENBLENDE	9111435.00		1	1	1	1	
201	MARCHIO	BRAND NAME	MARQUE	MARKENZEICHEN	982.023.00		1	1	1	1	
202	SERIGRAFIA	SCREEN PRINT	SÉRIGRAPHIE	SIEBDRUCK	910.230.00		1	1	1	1	
203	LABIRINTO	LABYRINTH	LABYRINTHE	LABYRINTH	256.235.00		2	2	2	2	
204	MANOPOLA	KNOB	BOUTON	DREHKNOPF	256.234.00	*	2	2	2	2	
205	MANOMETRO	PRESSURE GAUGE	MANOMÈTRE	DRUCKMESSER	678.083.00		1	1	1	1	
206	RACCORDO	CONNECTOR	RACCORD	ANSCHLUSS	678.085.00		1	1	1	1	
207	SERIGRAFIA	SCREEN PRINT	SÉRIGRAPHIE	SIEBDRUCK	910.551.00		1	1	1	1	
208	LAMPADA SPIA ARANCIO	ORANGE INDICATOR LIGHT	LAMPE TEMOIN ORANGE	ORANGE KONTROLLAMPE	963.013.00		1	1	1	1	
209	LAMPADA SPIA ROSSA	RED INDICATOR LIGHT	LAMPE TEMOIN ROUGE	ROTE KONTROLLLAMPE	963.014.00		1	1	1	1	
210	PIEDINO	FOOT	PIED	STELLFUSS	912.090.14		4	4	4	4	
211	PIASTRINA GIUNZIONE	FIXING PLATE	PLAQUETTE FIXAGE	BEFESTIGUNGSPLATTE	941.130.00		1	1	1	1	
212	GRIGLIA CAMINO	FLUE GRIDDLE	GRILLE POUR CHEMINÉE	KAMINROST	982.013.00		1	1	1	1	
213	VALVOLA SICUREZZA	SECUTIRY VALVE	SOUPAPE DE SÉCURITÉ	SICHERHEITSVENTIL	678.049.00		1	1	1	1	
214	VALVOLA	VALVE	SOUPAPE	VENTIL	256.334.00		1	1	1	1	
215	EROGATORE	DISTRIBUTOR	AJUTAGE	SPRÜHDOSE	678.082.00		1	1	1	1	
216	COPERCHIO	LID	COUVERCLE	DECKEL	9211729.00		1	1	1	1	
217	PANNELLO FRONTALE	FRONTAL PANEL	PANNEAU FRONTAL	FRONTPLATTE	9211726.00		1	1			
					9211727.00				1	1	
218	RUBINETTO	TAP	ROBINET	WASSERHAHN	678.079.00		1	1	1	1	
219	NIPPLO	NIPPLE	RACCORD FILETÉ	NIPPEL	931.213.00		1	1	1	1	
220	DADO	NUT	ÈCROU	MUTTER	0771.20075.0		1	1	1	1	
221	GUARNIZIONE	WASHER	GUARNITURE	DICHTUNGSRING	953.030.00		1	1	1	1	
222	RUBINETTO	TAP	ROBINET	WASSERHAHN	678.051.00		1	1	1	1	
223	FILTRO SCARICO	EXHAUST FILTER	FILTRE D'ECHAPPEMENT	ABLAUFFILTER	611.373.00		1	1	1	1	
224											
225											
226											
227											
228											
229											
230											
231											
232											
233											
234											
235											
236											
237											
238											

Mod.:	_90/... PED100… _90/… PED150… FROM: 01.04.2014 TO:…			cod. / num. 2531986.00 data / date 28/01/2015 rif. / ref. 2531985.00		RICAMBI CONSIGLIATI - RECOMMENDED SPARE PARTS - PIÈCES DÉTACHÉES RECOMMANDÉES - EMPFOHLENEN ERSATZTEILE	EM90/80 PED100	EM90/80 PED100A	EM90/80 PED150	EM90/80 PED150A	NOTE
POS.	DESCRIZIONE	DESCRIPTION	DENOMINATION	BENENNUNG	COD.		Q. ty				
200	CRUSCOTTO	CONTROL PANEL	BANDEAU	BEDIENBLENDE	9111434.00		1	1	1	1	
201	MARCHIO	BRAND NAME	MARQUE	MARKENZEICHEN	982.023.00		1	1	1	1	
202	SERIGRAFIA	SCREEN PRINT	SÉRIGRAPHIE	SIEBDRUCK	910.230.00		1	1	1	1	
203	LABIRINTO	LABYRINTH	LABYRINTHE	LABYRINTH	256.235.00		2	2	2	2	
204	MANOPOLA	KNOB	BOUTON	DREHKNOPF	256.234.00	*	2	2	2	2	
205	SERIGRAFIA	SCREEN PRINT	SÉRIGRAPHIE	SIEBDRUCK	910.551.00		1	1	1	1	
206	LAMPADA SPIA ARANCIO	ORANGE INDICATOR LIGHT	LAMPE TEMOIN ORANGE	ORANGE KONTROLLAMPE	963.013.00		1	1	1	1	
207	PIEDINO	FOOT	PIED	STELLFUSS	912.090.14		4	4	4	4	
208	PIASTRINA GIUNZIONE	FIXING PLATE	PLAQUETTE FIXAGE	BEFESTIGUNGSPLATTE	941.130.00		1	1	1	1	
209	GRIGLIA CAMINO	FLUE GRIDDLE	GRILLE POUR CHEMINÉE	KAMINROST	982.013.00		1	1	1	1	
210	EROGATORE	DISTRIBUTOR	AJUTAGE	SPRÜHDOSE	678.082.00		1	1	1	1	
211	COPERCHIO	LID	COUVERCLE	DECKEL	9211729.00		1	1	1	1	
212	PANNELLO FRONTALE	FRONTAL PANEL	PANNEAU FRONTAL	FRONTPLATTE	9211724.00		1	1			
					9211725.00				1	1	
213	NIPPLO	NIPPLE	RACCORD FILETÉ	NIPPEL	931.213.00		1	1	1	1	
214	DADO	NUT	ÈCROU	MUTTER	0771.20075.0		1	1	1	1	
215	GUARNIZIONE	WASHER	GUARNITURE	DICHTUNGSRING	953.030.00		1	1	1	1	
216	RUBINETTO	TAP	ROBINET	WASSERHAHN	678.051.00		1	1	1	1	
217	FILTRO SCARICO	EXHAUST FILTER	FILTRE D'ECHAPPEMENT	ABLAUFFILTER	611.373.00		1	1	1	1	
218											
219											
220											
221											
222											
223											
224											
225											
226											
227											
228											
229											
230											
231											
232											
233											
234											
235											
236											
237											
238											
239											