BOTELLEROS / BOTTLE RACK

- BFP - 100
- BFP - 150
- BFP - 200
- BFP - 250
- BFP - 300

Versión 2015-10

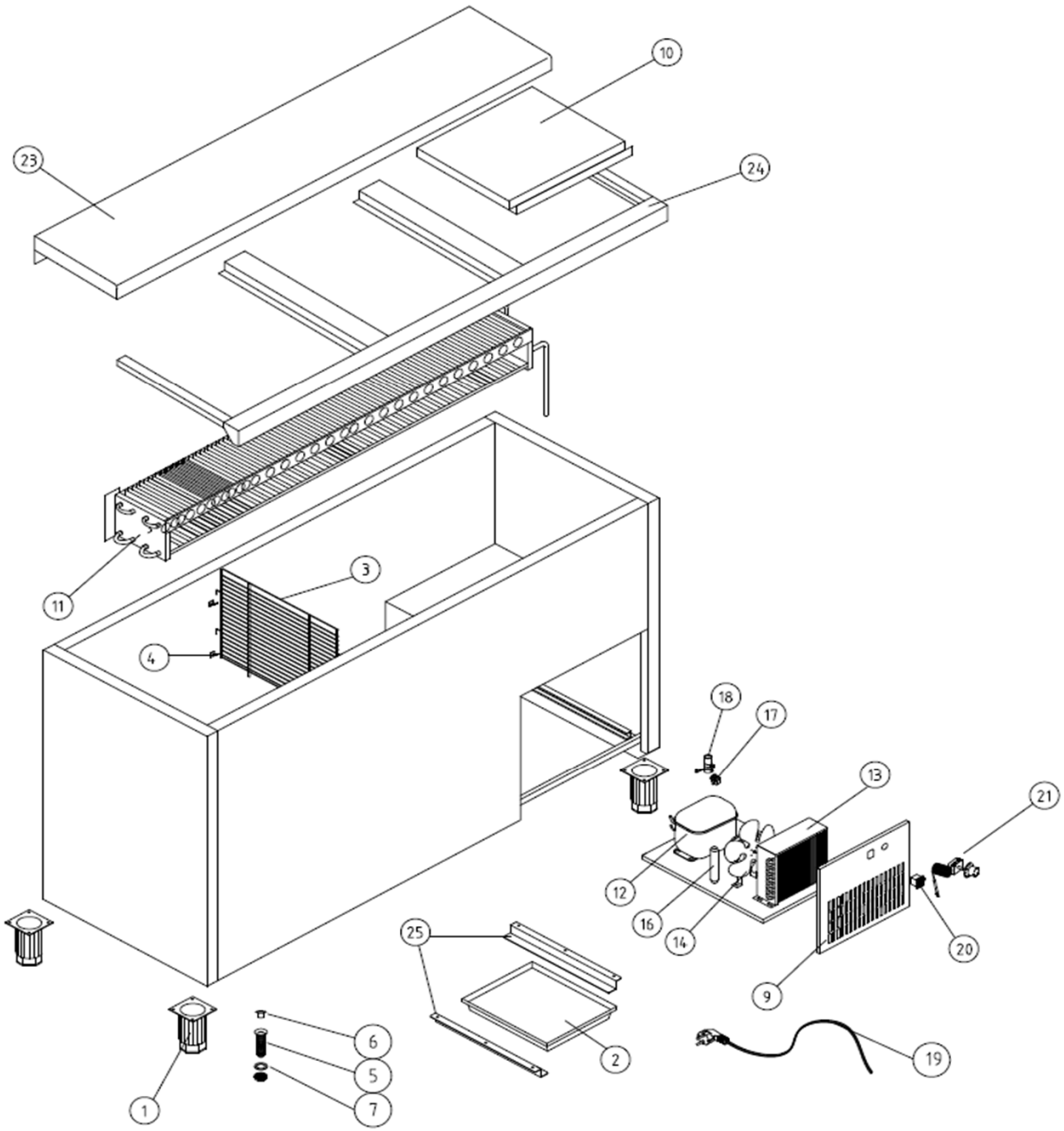

BOTELLEROS / BOTTLE RACK

FAGOR

- BFP - 100
- BFP - 150
- BFP - 200
- BFP - 250
- BFP - 300

Versión 2015-10

Nº	CODE CÓDIGO	RECOM.	DESCRIPTION	DESCRIPCIÓN	BFP - 100	BFP - 150	BFP - 200	BFP - 250	BFP - 300
1	12043729		PATA REGULABLE 65/88	ADJUSTABLE LEG 65/88	4	4	4	6	6
2	12046294		BANDEJA BOTELLERO	TRAY BOTTLE	1	1	1	1	1
3	12043964		SEPARADOR VERTICAL BFP	SEPARATOR UPRIGHT	1	2	3	4	5
4	12090875		SOPORTE SEPARADOR	SUPPORT SEPARATOR	4	8	12	16	20
5	12037489		DESAG COMPL 3/4 GRIS+TUERCA	DRAIN 3/4	1	1	1	1	1
6	12037989		TAPON DESAGÜE DE 3/4 CIEGO	STOPPER DRAIN 3/4	1	1	1	1	1
7	12037891		JUNTA GOMA DESAGÜE 3/4	RUBBER BOARD DRAIN	1	1	1	1	1
9	12071333		REJILLA CUADRO MANDOS	CONTROL PANEL	1	1	1	1	1
10	12045302		PUERTAS BOTELLERO BFP	DOOR BOTTLE	2	3	4	5	6
11	12044944		EVAPORADOR G-100	EVAPORATOR G - 100	1				
11	12031505		EVAP.BOTELLERO G-120	EVAPORATOR G - 120		1			
11	12030026		EVAP.BOTELLERO G-170	EVAPORATOR G - 170			1		
11	12027267		EVAP.BOTELLERO G-220	EVAPORATOR G -220				1	
11	12028256		EVAP.BOTELLERO G-270	EVAPORATOR G -270					1
12	12059098		COMP.EMT45HDR	COMP.EMT45HDR	1				
12	12059155		COMPR.NL-6,1 MF	COMPR.NL-6,1 MF		1			
12	12059154		COMPR.NL-7,3 MF	COMPR.NL-7,3 MF			1		
12	12046754		COMP.NEK6210Z	COMP.NEK6210Z				1	1
13	12034061		CONDENSADOR 4X2 SIN BAFLE	CONDENSADOR 4X2 SIN BAFLE	1				
13	12032903		CONDENSADOR 9x2	CONDENSADOR 9x2		1	1		
13	12032340		CONDENSADOR 9x3 FAGC0021	CONDENSADOR 9x3 FAGC0021				1	1
14	12067523		VENT. 5W 200/28º IMPELENTE	FAN 5W 200/28º IMPELENTE	1				
14	12067522		VENT. 10W 254/22º IMPELENTE	FAN 10W 254/22º IMPELENTE		1	1	1	1
16	12048655		FILTRO DESHIDRAT.40GR 1/4X1/4	FILTER 40 GR 1/4x1/4	1	1	1	1	1
17	12047835		RELE ARRANQUE EMT 45 HDR	RELE EMT 45 HDR	1				
17	12058829		RELE ARRANQ 117U6015	RELE 117U6015		1			
17	12058917		RELE ARRANQ NL-8.4-MF 117U6016	RELE NL-8.4-MF 117U6016			1		
17	12036939		RELE ARRAN. COMP. NEK 6210Z	RELE NEK 6210Z				1	1
18	12048046		COMPR.ARRANQUE EMT 45 HDR	EMT 45 HDR START CAPACITOR	1				
18	12033454		CONDEN.ARRANQUE FR-117U5015 80 mF	FR-117U50515 80 Mf START CAPACITOR		1	1		
18	12040120		CONDENSADOR COMP. NEK 6210Z	NEK 6210Z START CAPACITOR				1	1
19	12036805		MANG 3x1x2500 BL. SCHUKO 3T	3x1x2500 WHITE SCHUKO 3T HOSE	1	1	1	1	1
20	12047553		INTERRUPTOR BIPOLAR	SWITCH	1	1	1	1	1
21	12061639		TERMOSTATO TAPON MONEDA	THERMOSTAT PLUG CURRENCY	1	1	1	1	1
23	12084416		C. J. ENCIMERA BFP-100	TOP BFP - 100	1				
23	12030890		C.J. ENCIMERA BFP-150	TOP BFP - 150		1			
23	12029562		C.J. ENCIMERA BFP-200	TOP BFP - 200			1		
23	12029587		C.J. ENCIMERA BFP-250	TOP BFP - 250				1	
23	12084417		C.J. ENCIMERA BFP-300	TOP BFP - 300					1
24	12084372		EMBELLECEDOR COMPLETO BFP-100	COVER BFP - 100	1				
24	12030755		EMBELLECEDOR COMPLETO BFP-150	COVER BFP - 150		1			
24	12029826		EMBELLECEDOR COMPLETO BFP-200	COVER BFP - 200			1		
24	12029435		EMBELLECEDOR COMPLETO BFP-250	COVER BFP - 250				1	
24	12084377		EMBELLECEDOR COMPLETO BFP-300	COVER BFP - 300					1
25	12071377		GUIAS BANDEJA EVAPORACIÓN	TRAY GUIDES	2	2	2	2	2

Notes: