DESPIECE TECNICO / SPARE PARTS BOM

Lavavajillas de apertura frontal
Lave-vaisselle à ouverture frontale
Front loading dishwasher
Geschirrspülmaschinen mit frontbeladung
Lavastoviglie ad apertura frontale
Lava-louças de apertura frontal

Modelos / Models:

AD-64 BT DD (Japón)

Septiembre 2013 September

Ravisado Septiembre 2015 September revised

FAGOR

FAGOR INDUSTRIAL

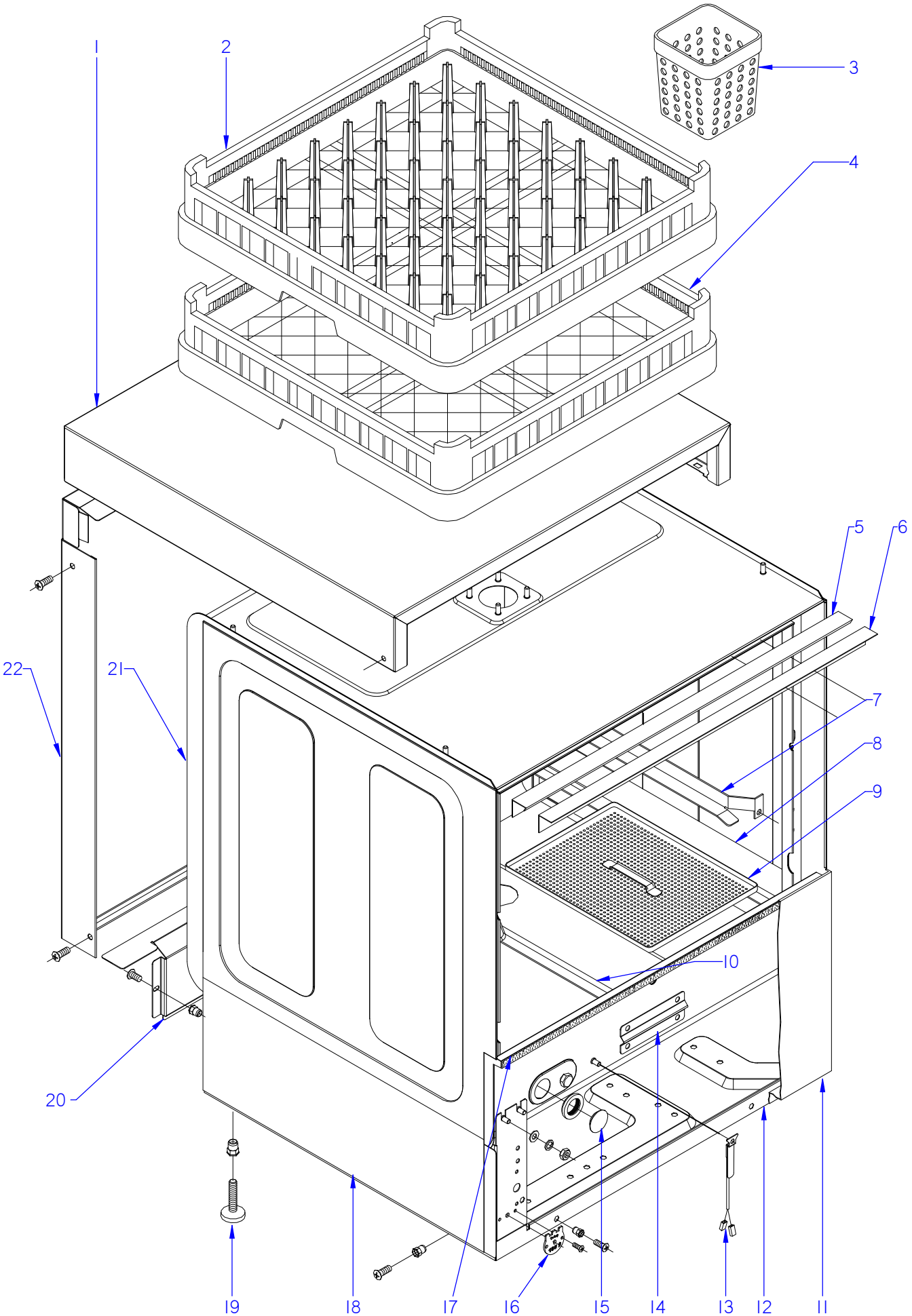

ITEM MARCADO EN COLOR = REPUESTO RECOMENDADO
COLOURED ITEM = RECOMMENDED SPARE PART

N plano	Firma	Fecha	Aparato	Lamina	
C-3120		2013-09	MUEBLE / FITTING LAVAVAJILLAS AD-64 BT DD	1	Fagor Industrial S.Coop. Onate

MOD.	LAVAVAJILLAS / DISWASHER	ZONA / ZONE	MUEBLE / FITTING	PLANO DIAGRAM	C-3120

ITEM	CODIGO CODE	DENOMINACION	NAME	AD-64 BT DD								ELIMINADO ELIMINATED	INTRODUCID. INTRODUCED	NOTAS
1	12022921	TAPA AD	COVER	1										
	12010163	REMACHE EXAGONAL M5	HEXAGONAL RIVET M5	2										
	12010242	TORNIL, APLASTADO M5x13 A304	FLAT HEADED BOLT M5x13 A304	6										
2	12024990	CESTILLO PLATOS CP-16-18	BASKET CP-16-18	1										
3	12023745	CESTILLO CUBIERTOS	CUTLERY BASKET	4										
4	12025011	CESTILLO BASE CT-10	BASE BASKET CT-10	1										
	12023751	TOPE 50x50x80	TOP 50x50x80	2										
5	12024374	PERFIL CAJA	BOX PROFILE	1										
6	12022469	ESCUADRA SUJECCION PERFIL	FASTENING BRACKET PROFILE	1										
7	12022568	GUIA CESTILLO DERECHO	RIGHT BASKET GUIDE	1										
S/Nº	12022569	GUIA CESTILLO IZQUIERDO	LEFT BASKET GUIDE	1										
	12010255	TUERCA EXAGONAL M6	WASHER A6	4										
	12009868	ARANDELA A6	HEXAGONAL NUT M6	4										
8	12022458	SOPORTE DERECHO BANDEJAS	RIGHT TRAY SUPPORT	1										
S/Nº	12022459	SOPORTE IZDO. BANDEJAS	LEFT TRAY SUPPORT	1										
	12010255	TUERCA EXAGONAL M6	WASHER A6	2										
	12009868	ARANDELA A6	WASHER A6	4										
9	12022559	BANDEJA COMPLETA	COMPLETE TRAY	4										
10	12022518	SOPORTE CENTRAL BANDEJAS	TRAY SUPPORT CENTRAL	1										
11	12022724	PANEL FRONTAL SIN PUERTA	FRONT PANEL	1										
	12010242	TORNILLO APLASTADO M5x13 A30	FLAT HEADED BOLT M5x13 A304	2										
12	12003593	ARMAZON COMPLETO	COMPLETE FRAME	1										
13	12025036	SONDA 64KOhmio NTC	PROBE 64KOhmio NTC	1										
S/Nº	12023142	AMARRE SONDA	PROBE CATCH	1										
	12009998	TUERCA EXAGONAL M3 DIN 935 ZI	HEXAGONAL NUT M3 DIN 935 ZIN	1										
	12009953	ARANDELA ABANICO A.3 A304	FAN WASHER A.3 A304	1										
14	12043725	SOPORTE BULBO TERMO. TANQUE	THERMOSTAT BULB SUPPORT	1										
	12010255	TUERCA EXAGONAL M6	WASHER A6	2										
	12009882	ARANDELA GROW. A6 A.304	WASHER GROW. A6 A.304	2										
15	12024430	TAPON	STOPPER	1										
	12024049	SOPORTE TERMOSTATO 1001713	THERMOSTAT SUPPORT 1001713	1										

MOD.	LAVAVAJILLAS / DISWASHER	ZONA / ZONE	MUEBLE / FITTING	PLANO DIAGRAM	C-3120

ITEM	CODIGO CODE	DENOMINACION	NAME	AD-64 BT DD								ELIMINADO ELIMINATED	INTRODUCID. INTRODUCED	NOTAS
16	12044848	REGULADOR 60ºC Tc DE 85ºC	REGULATOR 60ºC Tc DE 85ºC	1										
17	12024174	PERFIL GOMA ESPONJOSA	GOMA PROFILE	1										
18	12022560	PANEL LATERAL IZQUIERDO	LEFT SIDE PANEL	1										
S/Nº	12022563	PANEL LATERAL DERECHO	RIGHT SIDE PANEL	1										
	12010242	TORNIL, APLASTADO M5x13 A304	FLAT HEADED BOLT M5x13 A304	4										
	12010163	REMACHE EXAGONAL M5	HEXAGONAL RIVET M5	10										
	12010266	REMACHE TUBULAR Al ALUM. 4X8	TUBULAR RIVET Al ALUM. 4X8	2										
19	12024163	PATA REGULABLE	ADJUSTABLE LEG	4										
20	12022495	PANEL POSTERIOR INFERIOR	LOWER REAR PANEL	1										
	12010242	TORNIL, APLASTADO M5x13 A304	FLAT HEADED BOLT M5x13 A304	2										
21	12000497	CAJA SOLDADA LJ. A.F. AD HY	WELDED BOX LJ. A.F. AD HY	1										
	12010255	TUERCA EXAGONAL M6	WASHER A6	8										
	12010267	ARANDELA 16X6X1.2 A.304	WASHER 16X6X1.2 A.304	8										
	12009872	ARANDELA GROWER A6 A.304	WASHER GROWER A6 A.304	8										
22	12022740	PANEL POSTERIOR ALU.FI-30	REAR PANEL ALU.FI-30	1										
	12010242	TORNIL, APLASTADO M5x13 A304	FLAT HEADED BOLT M5x13 A304	6										

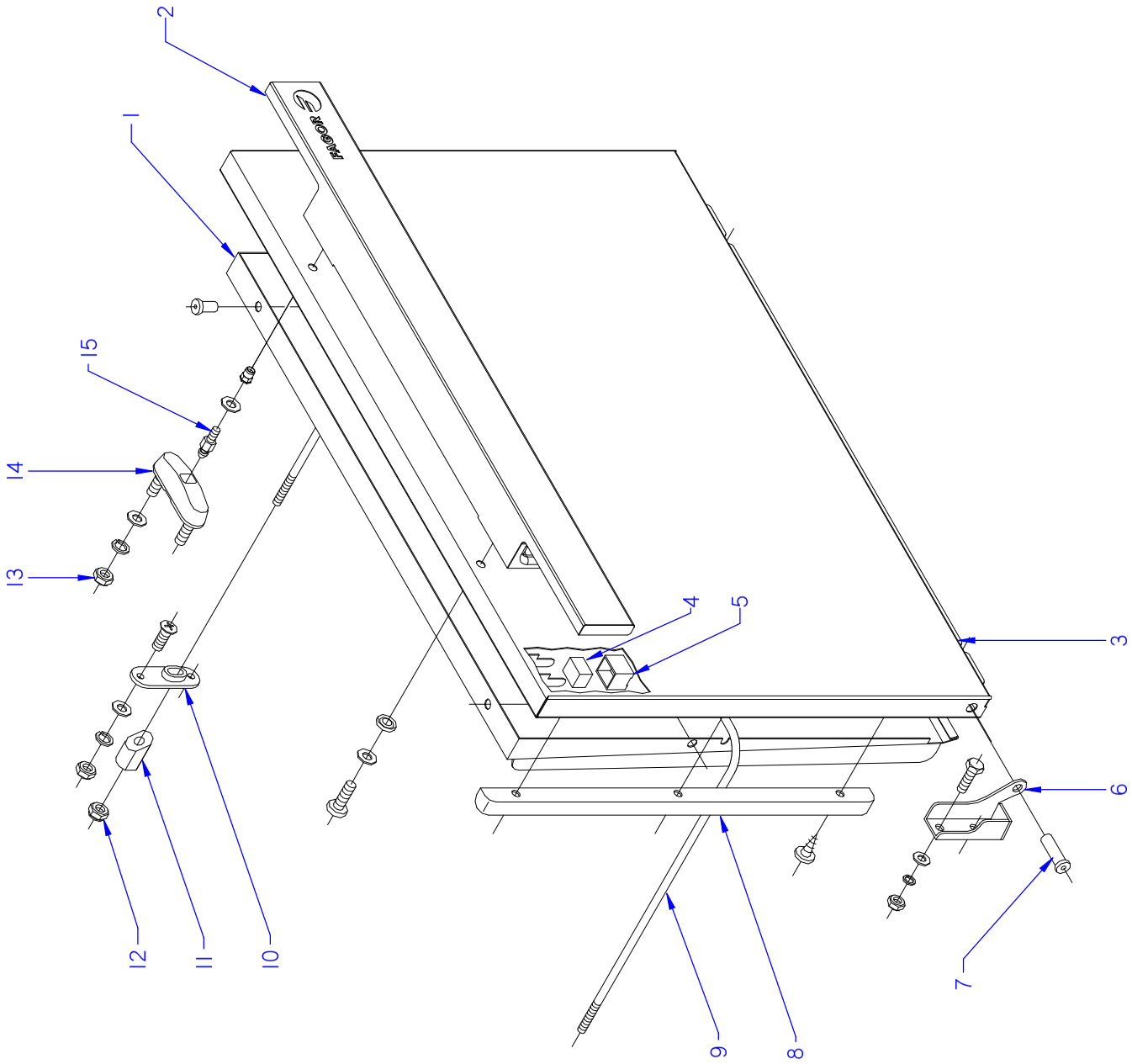

ITEM MARCADO EN COLOR = REPUESTO RECOMENDADO
COLOURED ITEM = RECOMMENDED SPARE PART

N plano	Firma	Fecha	Aparato		Lamina	
C-3121		2013-09	PUERTA / DOOR LAVAVAJILLAS AD-64 BT DD		2	Fagor Industrial S.Coop. Oñate

MOD.	LAVAVAJILLAS / DISWASHER	ZONA / ZONE	PUERTA / DOOR	PLANO DIAGRAM	C-3121

ITEM	CODIGO CODE	DENOMINACION	NAME	AD-64 BT DD								ELIMINADO ELIMINATED	INTRODUCID. INTRODUCED	NOTAS
	12091060	**KIT PUERTA AD-48 / AD-64 AF**	**DOOR AD-48 / AD-64 AF KIT**	**1**										
1	12003557	CONTRAPUERTA COMPLETA	COMPL. DOOR REVERSE	1										
	12010138	REMACHE TUBULAR 4 x 8	TUBULAR RIVET 4 x 8	4										
	12009944	ARANDELA A5	FAN WASHER A5	2										
2	12009389	ASA AD-48	HANDLE FI30	1										
S/Nº	12008367	TACO SUJECCION	FASTENING RAWL	2										
3	12003742	PUERTA COMPLETA AD	COMPLETE DOOR AD	1										
S/Nº	12002855	CHECK LIST LAVAVAJILLAS FAGOR	CHECK LIST	1										
4	12024303	IMAN	MAGNET	1										
5	12024094	PROTECTOR IMAN	MAGNET PROTECTOR	1										
6	12022324	BISAGRA IZQUIERDA T-C.	LEFT HINGE T-C.	1										
S/Nº	12022325	BISAGRA DERECHA T-C.	RIGHT HINGE T-C.	1										
	12010186	TORNILLO EXAGONAL M6X15	HEXAGONAL BOLT M6x15	4										
	12009868	ARANDELA A6	HEXAGONAL NUT M6	4										
	12009872	ARANDELA GROWER A6 A.304	WASHER GROWER A6 A.304	4										
	12010255	TUERCA EXAGONAL M6	WASHER A6	4										
7	12024071	EJE PUERTA	DOOR SHAFT	2										
8	12024295	MARCO PUERTA	DOOR FRAME	2										
	12010138	REMACHE TUBULAR 4 x 8	TUBULAR RIVET 4 x 8	6										
9	12023842	VARILLA TENSOR	TIGHTENER ROD	1										
10	12024180	SOPORTE TENSOR	TIGHTENER SUPPOR	2										
	12010242	TORNIL, APLASTADO M5x13 A304	FLAT HEADED BOLT M5x13 A304	4										
	12010284	TUERCA EXAGONAL M5	HEXAGONAL NUT M5	4										
	12009944	ARANDELA A5	FAN WASHER A5	2										
	12009924	ARANDELA GROW. A5 A.304	WASHER GROW. A5 A.304	4										
11	12024299	TENSOR PUERTA	TIGHTENER DOOR	2										
12	12010251	TUERCA AUTOB. M6	SELF-LOCKING NUT M6	2										
13	12010251	TUERCA AUTOB. M6	SELF-LOCKING NUT M6	4										
14	12003363	CONJUNTO CIERRE PUER.T-CO	LOCK UNIT PUERTAT-CO	2										
15	12024235	ENGANCHE CIERRE	LOCK LATCH	2										
	12009944	ARANDELA A5	FAN WASHER A5	2										

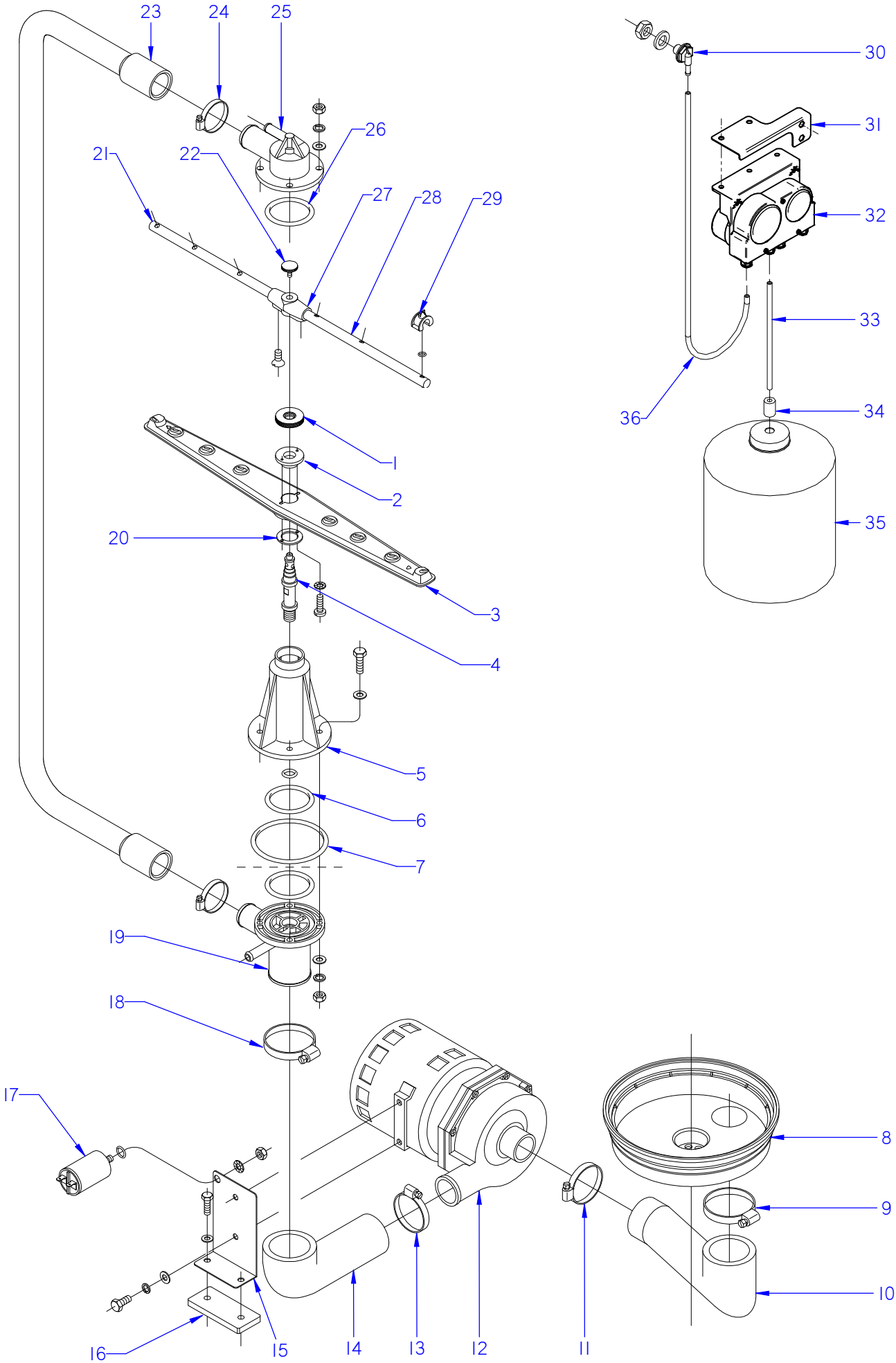

ITEM MARCADO EN COLOR = REPUESTO RECOMENDADO
COLOURED ITEM = RECOMMENDED SPARE PART

N plano	Firma	Fecha	Aparato	Lamina	
C-3122		2013-09	PARTE FUNCIONAL LAVADO / WASH FUNCTIONAL PART LAVAVAJILLAS AD-64 BT DD	3	Fagor Industrial S.Coop. FAGOR Onate

MOD.	LAVAVAJILLAS / DISWASHER	ZONA / ZONE	PARTE FUNCIONAL LAVADO WASH FUNCTIONAL PART	PLANO DIAGRAM	C-3122

ITEM	CODIGO CODE	DENOMINACION	NAME	AD-64 BT DD								ELIMINADO ELIMINATED	INTRODUCID. INTRODUCED	NOTAS
1	12024375	TUERCA ESPECIAL M.14X1	SPECIAL NUT M.14X1	2										
2	12045103	ENGANCHE DISTRIBUIDOR	DISTRIBUTOR CATCH	2								23.01.14		
2	12110631	ENGANCHE DISTRIBUIDOR	DISTRIBUTOR CATCH	2									23.01.14	
3	12025122	DISTRIBUIDOR MONTADO	DISTRIBUTOR	2										
4	12023844	EJE CENTRAL	CENTRAL SHAFT	2										
5	12024480	SOPORTE DISTRIBUID. INFERIOR	LOWER DISTRIB. SUPPORT	1										
	12009837	JUNTA TOR.13.94X19.18X2.6	O-RING 13.94X19.18X2.6	1										
6	12010079	JUNTA TOR.50.17X60.83X5.3	O-RING 50.17X60.83X5.3	2										
7	12009976	JUNTA TOR.85.09X95.75X5.3	O-RING 85.09X95.75X5.3	1										
8	12024367	CUBETA	TRAY	1										
9	12009933	ABRAZADERA 50-70L	CLAMP 50-70L	1										
10	12023683	CODO ASPIRACION 1003018	EXTRACTOR ELBOW	1										
11	12009933	ABRAZADERA 50-70L	CLAMP 50-70L	1										
12	12024265	BOMBA DE LAVADO	WASH PUMP	1								28.07.14		
12	12043287	BOMBA DE LAVADO	WASH PUMP	1									28.07.14	
12	12102834	BOMBA DE LAVADO 60Hz	WASH PUMP 60Hz	1										
13	12009962	ABRAZADERA 40-60	CLAMP 40-60	1										
14	12023689	CODO IMPULSION 1003017	IMPULSE ELBOW 1003017	1										
15	12022393	SOPORTE MOTOBO.F-3-4-5-6	MOTOR PUMP SUPPORT	1										
	12010202	TORNIL. EXAGONAL M6X10 A.304	HEX BOLT M6X10 A.304	2										
	12009868	ARANDELA A6	WASHER A6	2										
	12009872	ARANDELA GROWER A6 A.304	WASHER GROWER A6 A.304	2										
16	12023556	BASE BOMBA LAVADO 1003016	WASH PUMP BASE	1										
	12010220	TORNIL. EXAGONAL M5X20 A.304	HEX BOLT M5X20 A.304	2										
	12009944	ARANDELA A5	FAN WASHER A5	2										
17	12024376	CONDENSADOR 10 M.F.	CONDENSER 10 M.F.	1										
	12010256	JUNTA TORICA 9.12X16.18X3.53	O-RING 9.12X16.18X3.53	1										
	12010210	TUERCA EXAGONAL M8x1 INOX.	HEXAGONAL NUT M8x1 INOX.	1										
18	12009933	ABRAZADERA 50-70L	CLAMP 50-70L	1										

MOD.	LAVAVAJILLAS / DISWASHER	ZONA / ZONE	PARTE FUNCIONAL LAVADO WASH FUNCTIONAL PART	PLANO DIAGRAM	C-3122

ITEM	CODIGO CODE	DENOMINACION	NAME	AD-64 BT DD								ELIMINADO ELIMINATED	INTRODUCID. INTRODUCED	NOTAS
19	12023613	PASAMUROS	WALL BUSHING	1										
	12010115	TORNIL. EXAGONAL M6X40 A.304	HEXAGONAL BOLT M6X40 A.304	4										
	12010255	TUERCA EXAGONAL M6	WASHER A6	4										
	12009868	ARANDELA A6	WASHER A6	4										
	12009872	ARANDELA GROWER A6 A.304	WASHER GROWER A6 A.304	4										
	12010206	ARANDELA Ø6X12X1.5	WASHER Ø6X12X1.5	4										
20	12024289	AMARRE ENGANCHE DISTRIBUID.	DISTRIBUT. CATCH FASTENING	2										
	12009838	TORNILLO ALOMADO M3X6	CURVED SCREW M3X6	4										
	12009953	ARANDELA ABANICO A.3 A304	FAN WASHER A.3 A304	4										
21	12022442	RAMA DE ACLARADO IZQUIERDA	LEF TRINSE BRANCH	2										
22	12009829	TORNILLO ESPECIAL M.5X0.8	SPECIAL BOLT M.5X0.8	2										
23	12023699	ARBOL DE LAVADO	WASH CAM	1										
24	12009997	ABRAZADERA 25-40	CLAMP 25-40	2										
25	12024471	SOPORTE DISTRIBUIDOR SUPER.	UPPER DISTRIB. SUPPORT	1										
	12010255	TUERCA EXAGONAL M6	WASHER A6	4										
	12009868	ARANDELA A6	WASHER A6	4										
	12009872	ARANDELA GROWER A6 A.304	WASHER GROWER A6 A.304	4										
26	12010079	JUNTA TOR.50.17X60.83X5.3	O-RING 50.17X60.83X5.3	1										
27	12024470	SOPORTE RAMAS ACLARADO	TRINSE BRANCH SUPPORT	2										
	12010293	TORN. AVELLANADO M4X10 A.304	COUNTERSUNK BOLT M4X10 A30	4										
28	12022441	RAMA DE ACLARADO DERECHA	RIGHT TRINSE BRANCH	2										
29	12024252	TOBERA ACLARADO	RINSE NOZZLE	12										
30	12024531	PASAMUROS DETERGENTE INOX	DETERGENT WALL BUSHING	1										
	12010260	JUNTA Ø18X12.5X1.5	SEAL 18X12.5X1.5	1										
	12010027	TUERCA EXAGONAL M12	HEXAGONAL NUT M12	1										
31	12022227	SOPORTE DOSIFICADOR W	DOSEFOR W SUPPORT	1										
	12010202	TORNIL.EXAGONAL M6X10 A.304	HEXAGONAL BOLT M6X10	2										
	12010238	TORNIL.EXAGONAL M5X10 A.304	HEXAGONAL BOLT M5X10	2										
32	12024274	DOSIFICADOR DGTE ABRILLANT.	DETERGENT DISPENSER RINS.	1										
33	12024139	CONDUCTO ASPIRACIÓN AZKOY	INLET CONDUIT AZKOY	1										
34	12024353	PESO FILTRO	FILTER WEIGHT	1										

MOD.	LAVAVAJILLAS / DISWASHER	ZONA / ZONE	PARTE FUNCIONAL LAVADO WASH FUNCTIONAL PART	PLANO DIAGRAM	C-3122

ITEM	CODIGO CODE	DENOMINACION	NAME	AD-64 BT DD								ELIMINADO ELIMINATED	INTRODUCID. INTRODUCED	NOTAS
35	-	GARRAFA DETERGENTE	DETERGENT CAN	1										
36	11000079	CONDUCTO DOSIFICADOR	DISPENSER CONDUIT	1										

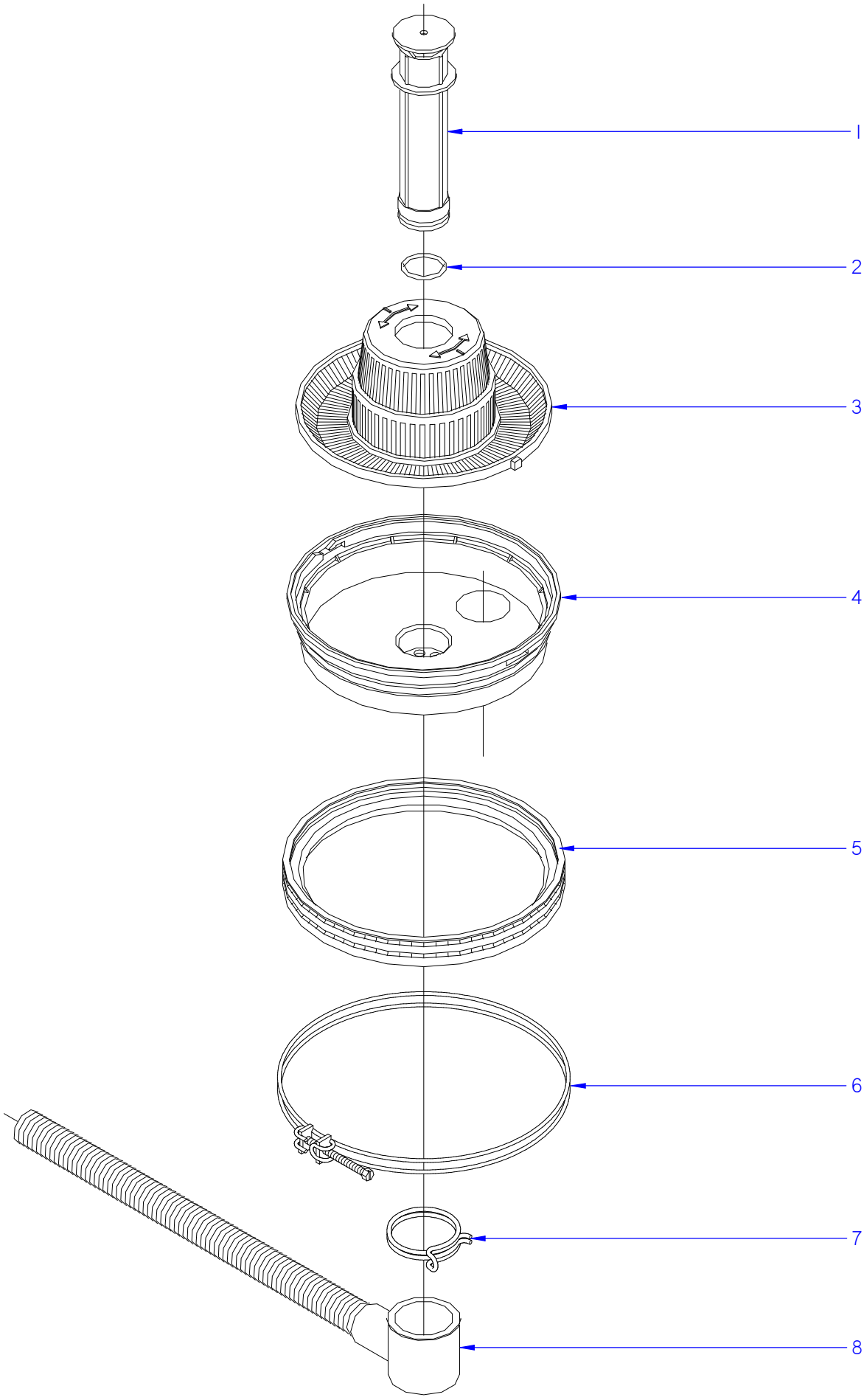

ITEM MARCADO EN COLOR = REPUESTO RECOMENDADO
COLOURED ITEM = RECOMMENDED SPARE PART

N plano	Firma	Fecha	Aparato	Lamina	
C-3123		2013-09	CONJUNTO FUNCIONAL DESAGUE LAVAVAJILLAS AD-64 BT DD	4	Fagor Industrial S.Coop. FAGOR Oñate

MOD.	LAVAVAJILLAS / DISWASHER	ZONA / ZONE	PARTE FUNCIONAL DESAGÜE DRAINAGE FUNCTIONAL PART	PLANO DIAGRAM	C-3123

ITEM	CODIGO CODE	DENOMINACION	NAME	AD-64 BT DD								ELIMINADO ELIMINATED	INTRODUCID. INTRODUCED	NOTAS
1	12049258	ALIVIADERO	OVERFLOW	1										
2	12010165	JUNTA TOR.36.17X41.41X2.6	O-RING 36.17X41.41X2.6	1										
3	12024410	CONJUNTO FILTRO AF.	FILTER AF.	1										
4	12024367	CUBETA	TRAY	1										
5	12024556	JUNTA CUBETA	TRAY SEAL	1										
6	12023841	ABRAZADERA CUBETA COMPL.	TRAY CLAMP	1										
7	12007966	ABRAZAD. ELAST. 56-58.8	ELASTIC CLAMP 56-58.8	1										
8	12024473	MANGUERA DESAGUE	DRAINAGE HOSE	1										

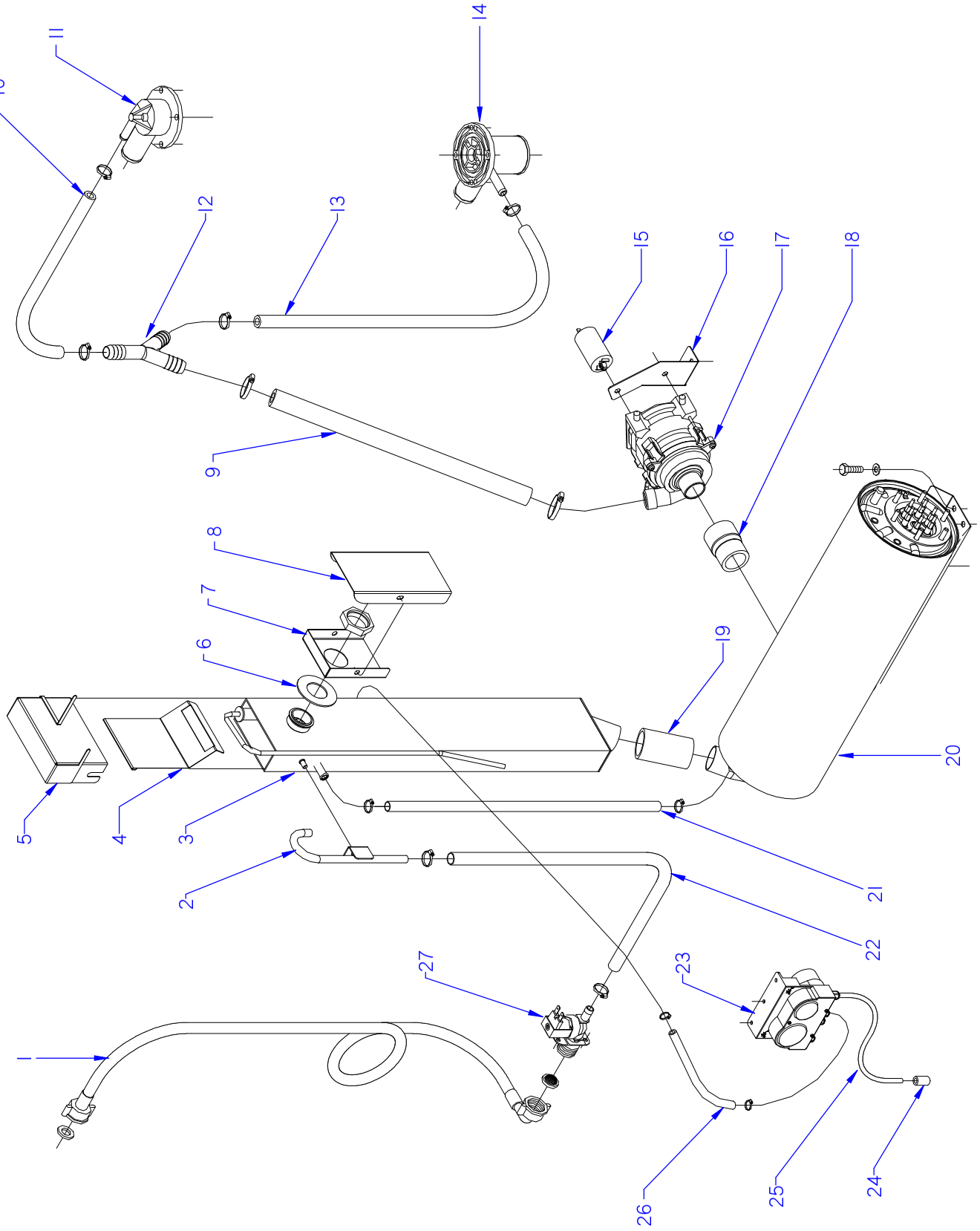

ITEM MARCADO EN COLOR = REPUESTO RECOMENDADO
COLOURED ITEM = RECOMMENDED SPARE PART

N plano	Firma	Fecha	Aparato	Lamina	
C-3124		2013-09	PARTE FUNCIONAL ACLARADO / RINSE FUNCTIONAL PART LAVAVAJILLAS AD-64 BT DD	5	Fagor Industrial S.Coop. FAGOR Oñate

MOD.	LAVAVAJILLAS / DISWASHER	ZONA / ZONE	PARTE FUNCIONAL ACLARADO RINSE FUNCTIONAL PART	PLANO DIAGRAM	C-3124

ITEM	CODIGO CODE	DENOMINACION	NAME	AD-64 BT DD								ELIMINADO ELIMINATED	INTRODUCID. INTRODUCED	NOTAS
1	12024115	MANGUERA ENTRADA AGUA	WATER INTAKE HOSE	1										
2	12003426	CAÑO COMPLETO	COMPLETE SPOUT	1										
	12009868	ARANDELA A6	WASHER A6	1										
	12010255	TUERCA EXAGONAL M6	HEXAGONAL NUT M6	1										
3	12022959	DEPÓSITO COMPLETO	COMPLETE TANK	1										
4	12003329	TAPA INTERIOR DEPOSITO	TANK INNER COVER	1								10.11.14		
4	12002482	TAPA INTERIOR DEPOSITO	TANK INNER COVER	1									10.11.14	
5	12003368	CUBIERTA DEPÓSITO	TANK COVER	1										
	12010255	TUERCA EXAGONAL M6	HEXAGONAL NUT M6	1										
	12009868	ARANDELA A6	WASHER A6	1										
6	12023554	JUNTA RETENCION VAPORES	STEAM RETAINER SEAL	1										
7	12022376	CUBIERTA PASAMUROS INTER.	INTER. BUSHING COVER	1										
	12009831	CONTRATUERCA 1 LATON	COUNTERNUT 1 BRASS	1										
8	12022421	CUBIERTA PASAMUROS EXTER.	EXTER. BUSHING COVER	1										
	12009970	REMACHE EXAGONAL M5 INOX.	HEXAGONAL RIVET M5 INOX	2										
	12010242	TORNIL, APLASTADO M5x13 A304	FLAT HEADED BOLT M5x13 A304	2										
9	12023763	MANGUERA ENJUAGUE BOMBA	RINSE PUMP HOSE	1										
10	11000083	TUBO GOMA NEGRA Ø 17*10	BLACK RUBBER PIPE 17*10	1										
	12010036	ABRAZADERA 12-20	CLAMP 12-20	2										
11	12024471	SOPORTE DISTRIBUIDOR SUPER.	UPPER DISTRIB. SUPPORT	1										
12	12023511	RACORD EN Y	Y-CONNECTION	1										
13	11000083	TUBO GOMA NEGRA Ø 17*10	BLACK RUBBER PIPE 17*10	1										
	12010036	ABRAZADERA 12-20	CLAMP 12-20	2										
14	12023613	PASAMUROS	BUSHING	1										
15	12023600	CONDENSADOR 400V VDE	CONDENSER 400V VDE	1										
16	12022169	SOPORTE BOMBA HANNING	HANNING SUPPORT RINSE	1										
	12010163	REMACHE EXAGONAL M5	HEXAGONAL RIVET M5	4										
	12009944	ARANDELA A5	WASHER A5	2										
	12010238	TORNILLO EXAGONAL M5x10	HEXAGONAL BOLT M5x10	2										
17	12024233	BOMBA ACLARADO HANNING	RINSE PUMP	1										
18	12024437	MANGUITO REDUCCIÓN	REDUCTION HOSE	1										

MOD.	LAVAVAJILLAS / DISWASHER	ZONA / ZONE	PARTE FUNCIONAL ACLARADO RINSE FUNCTIONAL PART	PLANO DIAGRAM	C-3124

ITEM	CODIGO CODE	DENOMINACION	NAME	AD-64 BT DD								ELIMINADO ELIMINATED	INTRODUCID. INTRODUCED	NOTAS
19	12024439	MANGUITO CONEXIÓN	CONNECTION HOSE	1										
	12009986	ABRAZADERA 32-50 L	CLAMP 32-50 L	2										
20	12022973	CALDERIN COMPLETO BBT	COMPLETE DRUM BBT	1										
21	11000083	TUBO GOMA NEGRA Ø 17*10	BLACK RUBBER PIPE 17*10	1										
	12010036	ABRAZADERA 12-20	CLAMP 12-20	2										
22	11000083	TUBO GOMA NEGRA Ø 17*10	BLACK RUBBER PIPE 17*10	1										
	12010036	ABRAZADERA 12-20	CLAMP 12-20	2										
23	12024274	DOSIFICADOR DGTE ABRILLANT.	DETERGENT DISPENSER RINS.	1										
S/Nº	12024067	CASQUILLO	BUSHING	2										
	12010287	TORN. AVELLA. M4x25 H.ZINCADO	COUNTERSUNK NUT M4x25 H.ZIN	2										
24	12024353	PESO FILTRO	FILTER WEIGHT	1										
25	12025178	CONDUCTO ABRILLANTADOR AZU	BLUE RINSE CONDUIT	1										
26	11000148	CONDUCTO ABRILLAN. AZUL Ø 6X4	BLUE RINSE CONDUIT Ø 6X4	1										
27	12025161	ELECTROVAL. 230V AC 50/60Hz 1 A	SOLENOID VALVE 230V AC50/60	1										
	12044690	REGULADOR DE CAUDAL 10L	FLOW REGULATOR 10L	1										
	12024045	REGULADOR 8L 54.034 ROJO	RED REGULATOR 8L 54.034	1								11.11.13		
	12096626	REGULADOR 8 L (ROJO)	RED REGULATOR 8L	1									11.11.13	

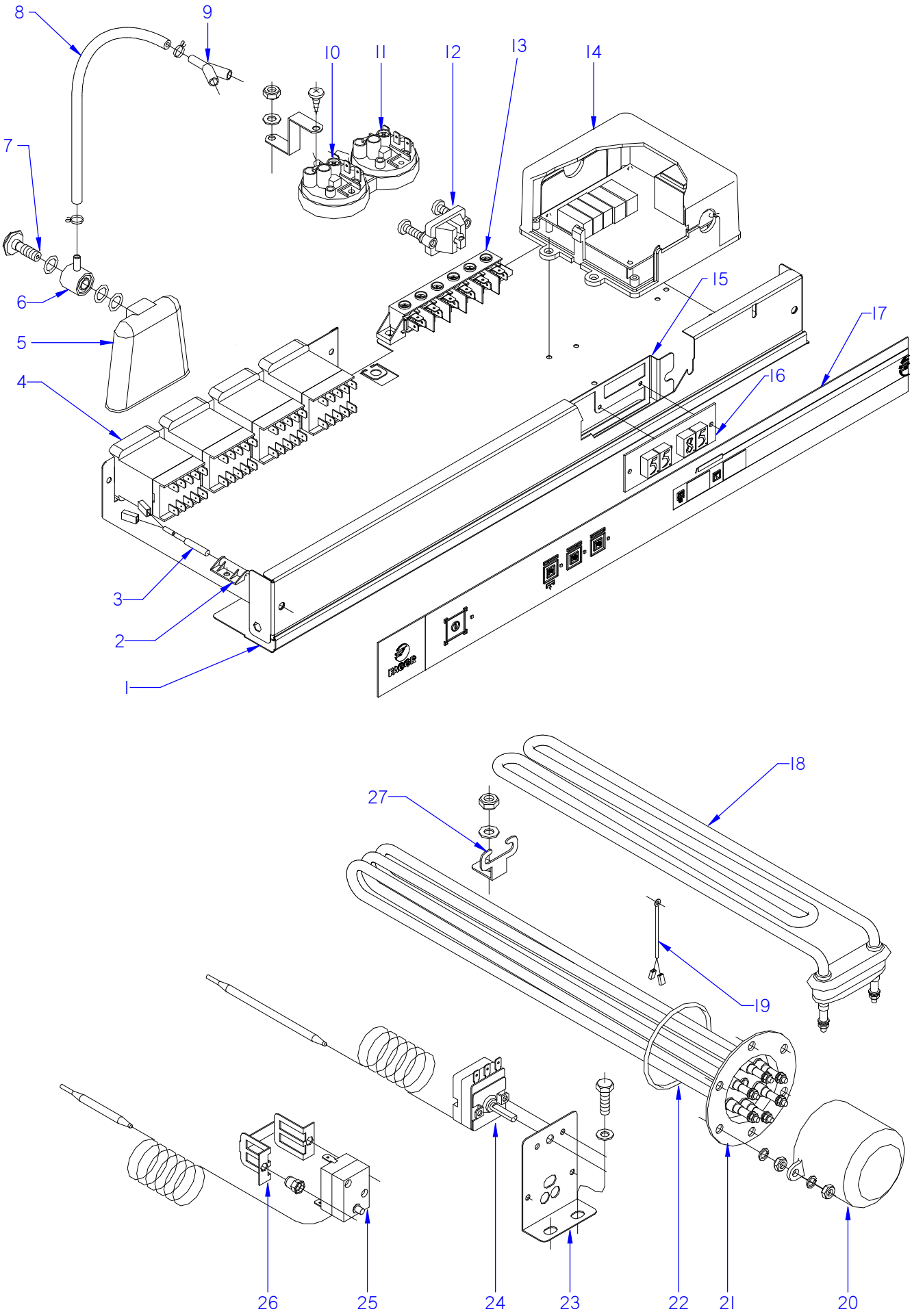

ITEM MARCADO EN COLOR = REPUESTO RECOMENDADO
COLOURED ITEM = RECOMMENDED SPARE PART

N plano	Firma	Fecha	Aparato	Lamina	
C-3125		2013-09	PARTE FUNCIONAL ELECTRICA / ELECTRICS FUNCTIONAL PART LAVAVAJILLAS AD-64 BT DD	6	Fagor Industrial S.Coop. FAGOR Oñate

MOD.	LAVAVAJILLAS / DISWASHER	ZONA / ZONE	PARTE FUNCIONAL ELECTRICA ELECTRICS FUNCTIONAL PART	PLANO DIAGRAM	C-3125

ITEM	CODIGO CODE	DENOMINACION	NAME	AD-64 BT DD								ELIMINADO ELIMINATED	INTRODUCID. INTRODUCED	NOTAS
1	12003591	FRENTE COMPLETO AD	COMPLETE FRONT AD	1										
	12010242	TORNILLO APLASTADO M5x13 A30	FLAT HEADED BOLT M5x13 A304	1										
	12010163	TUERCA EXAGONAL M5	HEXAGONAL NUT M5	1										
2	12024066	AMARRE INTERRUP. MAGNETICO	MAGNETIC SWITCH FASTENER	1										
	12010242	TORNIL.EXAGONAL M5X13 A.304	HEXAGONAL BOLT M5X13	1										
	12009944	ARANDELA A5	FAN WASHER A5	1										
	12010163	TUERCA EXAGONAL M5	HEXAGONAL NUT M5	1										
3	12024477	INTERRUPTOR MAGNETICO	MAGNETIC SWITCH	1										
4	12024011	CONTACTOR 230 V. 50-60 HZ	CONTACTOR 230 V. 50-60 HZ	4										
5	12024350	CAMARA PRESOSTATO	PRESSURE SWITCH	1										
6	12024157	EMPALME PRESOSTATO	PRESSURE SWITCH CONNEX	1										
7	12024222	TORNILLO PRESOSTATO	PRESSURE SWITCH BOLT	1										
	12009873	JUNTA TORICA 16.01X10.77X2.62	O-RING 16.01X10.77X2.62	3										
8	11000066	TUBO GOMA NEGRO D 8*4	BLACK RUBBER PIPE Ø 8*4	1										
	12023707	BRIDA ELASTICA TUBO	ELASTIC PIPE FLANGE	2										
9	12023510	RACORD EN Y	Y CONNECTION	1										
10	12024269	PRESOSTATO SIMPLE	SIMPLE PRESSURE SWITCH	1										
11	12023802	PRESOSTATO SIMPLE PVS 230V	SIMPLE PRESSURE SWITCH	1										
S/Nº	12023163	SOPORTE PRESOSTATO	PRESSURE SWITCH SUPPORT	1										
	12010290	TORNILLO ALOMADO BZ-3,5X9,5	ALOM. BOLT BZ-3,5X9,5	1										
	12010242	TORNILLO APLASTADO M5x13 A30	FLAT HEADED BOLT M5x13 A304	1										
	12009944	ARANDELA A5	WASHER A5	1										
	12010284	TUERCA EXAGONAL M5	HEXAGONAL NUT M5	1										
12	12024230	RETENEDOR DE CABLE	CABLE HOLDER	1										
13	12025183	REGLETA AUXILIAR FV-122	AUXILIARY STRIP FV-122	1										
	12023957	ROTULO ADHESIVO	ADHES. LABEL	1										
	12045569	BORNAS PORTAFUSIB. 13A 2,5	FUSE HOLDER TERMINAL 13A	1										
	12010242	TORNILLO APLASTADO M5x13	FLAT HEADED BOLT M5x13 A304	2										
	12009944	ARANDELA A5	WASHER A5	2										
	12010284	TUERCA EXAGONAL M5	HEXAGONAL NUT M5	2										

MOD.	LAVAVAJILLAS / DISWASHER	ZONA / ZONE	PARTE FUNCIONAL ELECTRICA ELECTRICS FUNCTIONAL PART	PLANO DIAGRAM	C-3125

ITEM	CODIGO CODE	DENOMINACION	NAME	AD-64 BT DD								ELIMINADO ELIMINATED	INTRODUCID. INTRODUCED	NOTAS
14	12008750	CONTROL TARJETA 230V AC 50/60	CARD CONTROL 230VAC 50/60	1										
	12009928	ARANDELA ABANICO A5 A.304	FAN WASHER A4 A.304	4										
	12009987	ARANDELA A4	WASHER A4	4										
	12010262	TORN. AVELLANADO M4X15	COUNTERSUNK BOLT M4X15	4										
15	12022219	SOPORTE COMPONENTES	COMPON. SUPPORT	1										
	12025260	DISTANCIADOR M3	M3 SPACER	3										
	12024424	TORNILLO AMARRE M3	CLAMPING SCREW M3	3										
	12009869	TUERCA EXAGONAL M3	HEXAGONAL NUT M3	3										
	12009953	ARANDELA ABANICO A3 A.304	FAN WASHER A3 A.304	3										
	12010284	TUERCA EXAGONAL M5	HEXAGONAL NUT M5	3										
	12009924	ARANDELA GROWER A5	WASHER GROWER A5	2										
16	12024028	VISUALIZADOR 12V DC 50Hz 4dig 7	DISPLAY 12V DC 50Hz 4dig 7seg	1										
17	12024724	EMBELLECEDOR ADHESIVO AD-72	ADHES. TRIM AD-72	1										
18	12024645	RESISTENCIA TANQUE	TANK RESISTOR	1										
19	12025036	SONDA 64KOhmio NTC	PROBE 64KOhmio NTC	1										
20	12024282	CAPERUZA RESISTENCIAS	RESIST. CAP	1										
	12010185	TUERCA EXAGONAL M6 LATON	HEXAGONAL NUT M6 BRASS	2										
	12010238	TORNIL.EXAGONAL M5X10 A.304	HEXAGONAL BOLT M5X10	2										
	12009944	ARANDELA A5	FAN WASHER A5	2										
	12010030	TORNIL.EXAGONAL M10X20	HEXAGONAL BOLT M10X20	1										
21	12024732	RESISTENCIA CALDERIN	BOILER RESISTOR	1										
	12009897	TUERCA EXAGONAL M4 ZINCADA	HEXAGONAL NUT M4 ZIN.	6										
22	12010051	JUNTA TORICA AN-36 282333	"O" RING AN-36 282333	1										
	12010185	TUERCA EXAGONAL M6 LATON	HEXAGONAL NUT M6 BRASS	6										
	12009872	ARANDELA GROW. A6 A.304	WASHER GROW. A6 A.304	6										
23	12022224	SOPORTE TERMOSTATOS	THERMOSTAT SUPPORT	1										
	12009852	TORNIL. AVELLANADO M4X8 A304	COUNTERSUNK BOLT M4x8	4										
	Q012031000	TORNIL. EXAGONAL M5X10 A.304	HEXAGONAL BOLT M5X10	2										
	Q232030000	ARANDELA A5	HEXAGONAL NUT M5	2										
24	12040858	TERMOSTATO 16A 85ºC 6MM 80 1v	THERMOSTAT 16A 85ºC 6MM	2										
25	12023830	TERMOSTATO SEGURIDAD 125ºC	SECURITY THERMOSTAT 125ºC	1										

MOD.	LAVAVAJILLAS / DISWASHER	ZONA / ZONE	PARTE FUNCIONAL ELECTRICA ELECTRICS FUNCTIONAL PART	PLANO DIAGRAM	C-3125

ITEM	CODIGO CODE	DENOMINACION	NAME	AD-64 BT DD								ELIMINADO ELIMINATED	INTRODUCID. INTRODUCED	NOTAS
25	12023830	TERMOSTATO SEGURIDAD 125ºC	SECURITY THERMOSTAT 125ºC	1										
26	12022151	AMARRE LIMITADOR TECASA	LIMITER FASTENING	1										
	12010158	REMACHE EXAGONAL M4	HEXAGONAL RIVET M4	2										
	12009852	TORNIL. AVELLANADO M4X8 A304	COUNTERSUNK BOLT M4x8	2										
27	12022859	SOPORTE RESISTENCIA TANQUE	TANK RESISTOR SUPPORT	1										
	12009868	ARANDELA A6	WASHER A6	1										
	12010255	TUERCA EXAGONAL M6	HEXAGONAL NUT M6	1										

MOD.	LAVAVAJILLAS / DISWASHER	ZONA / ZONE	VARIOS / MISCELLANEOUS	PLANO DIAGRAM	

ITEM	CODIGO CODE	DENOMINACION	NAME	AD-64 BT DD								ELIMINADO ELIMINATED	INTRODUCID. INTRODUCED	NOTAS
	12022072	FOLLETO INSTRUCCIONES AD-48	INSTRUCTION LEAFLET. AD-48	1										
	12001724	ESQUEMA TEORICO AD-48, 64	THEORETICAL DIAGRAM AD-64	1										
	12004536	PLANO DE MONTAJE AF AD	ASSEMBLY DIAGRAM AF AD	1										
	12009155	INSTALAC. ELECTRICA AD 48, 64	ELEC. INSTALATION AD 48, 64	1										
	12009083	CABLEADO AD48, AD64 CLINIC	AD48, AD64 CLINIC WIRING	1										
	12024491	CABLEADO CONEXIÓN SONDAS	PROBE CONNECTION WIRING	1										
	12023672	CABLE CONEXION PLACA-DISPLAY	DISPLAY CONNECTI. WIRING	1										
	12024651	CABLEADO MANGUERA-4X2.5MM2	WIRING HOSE-4X2.5MM2	1										
	12022100	LEYENDA LAVAVAJILLAS AF	DISHWASHER LF LEGEND	1										

AD 72, AD 72 W, AD 64, AD 64 B, AD 64 B BT, AD 64 B DD, AD 64 C, AD 64 CW, AD 64 D, AD 64 DD, AD 64 HY, AD 45 B BT

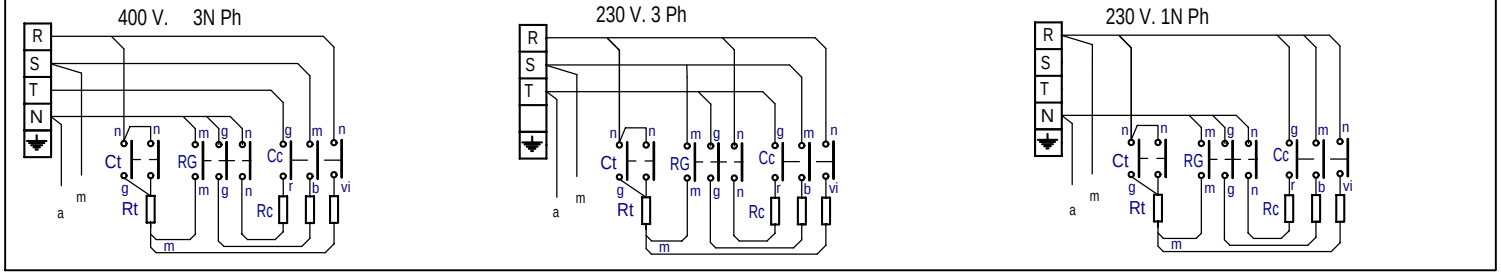

AD 48, AD 48 B, AD 48 B DD, AD 48 C, AD 48 D, AD 48 DD, AD 48 HY, AD 48 W, FR 48 E HY

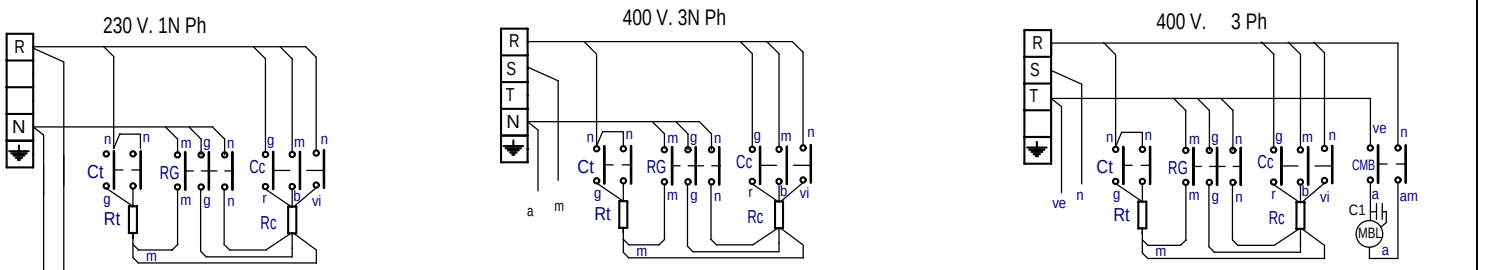

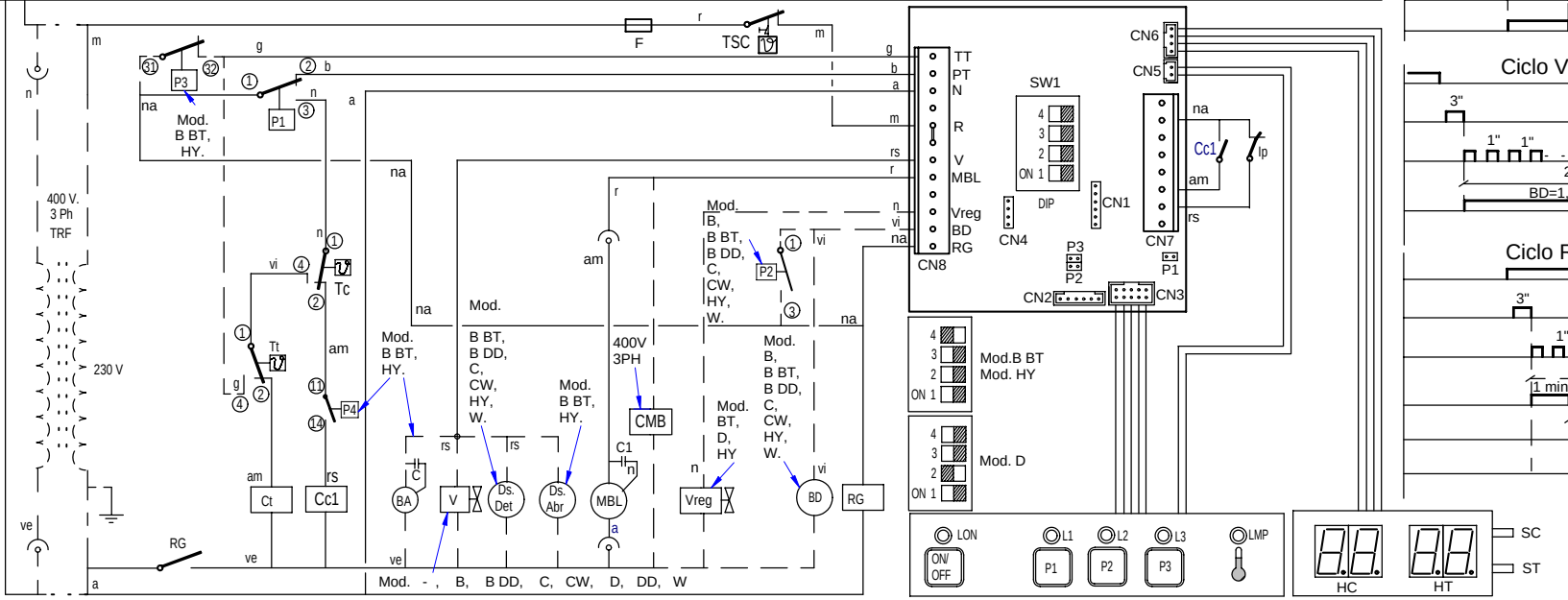

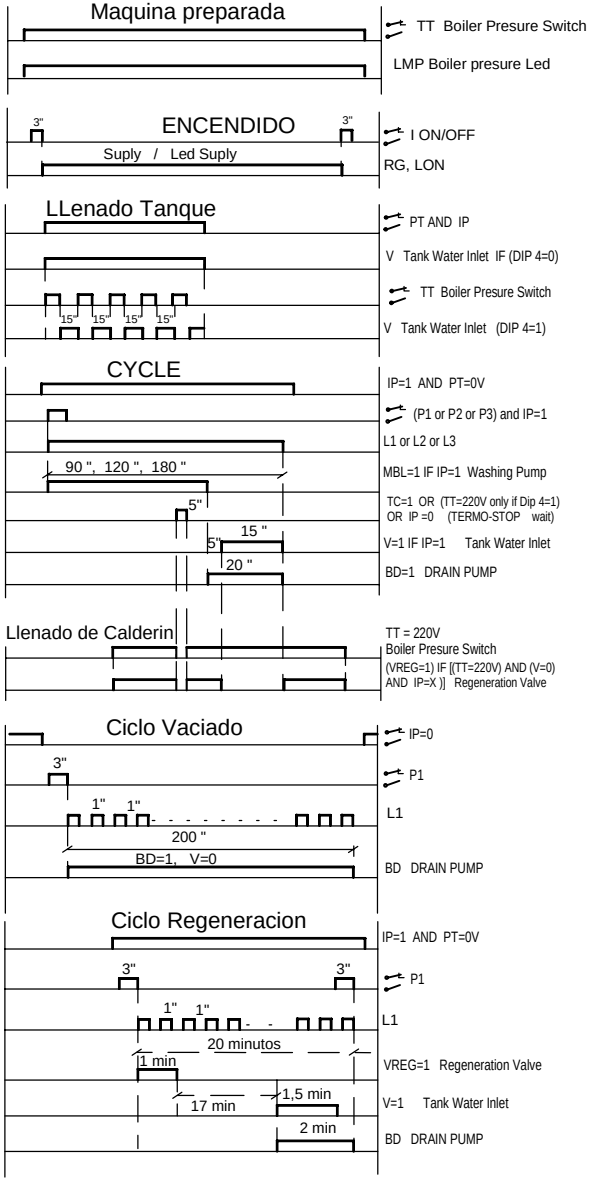

Z213075000

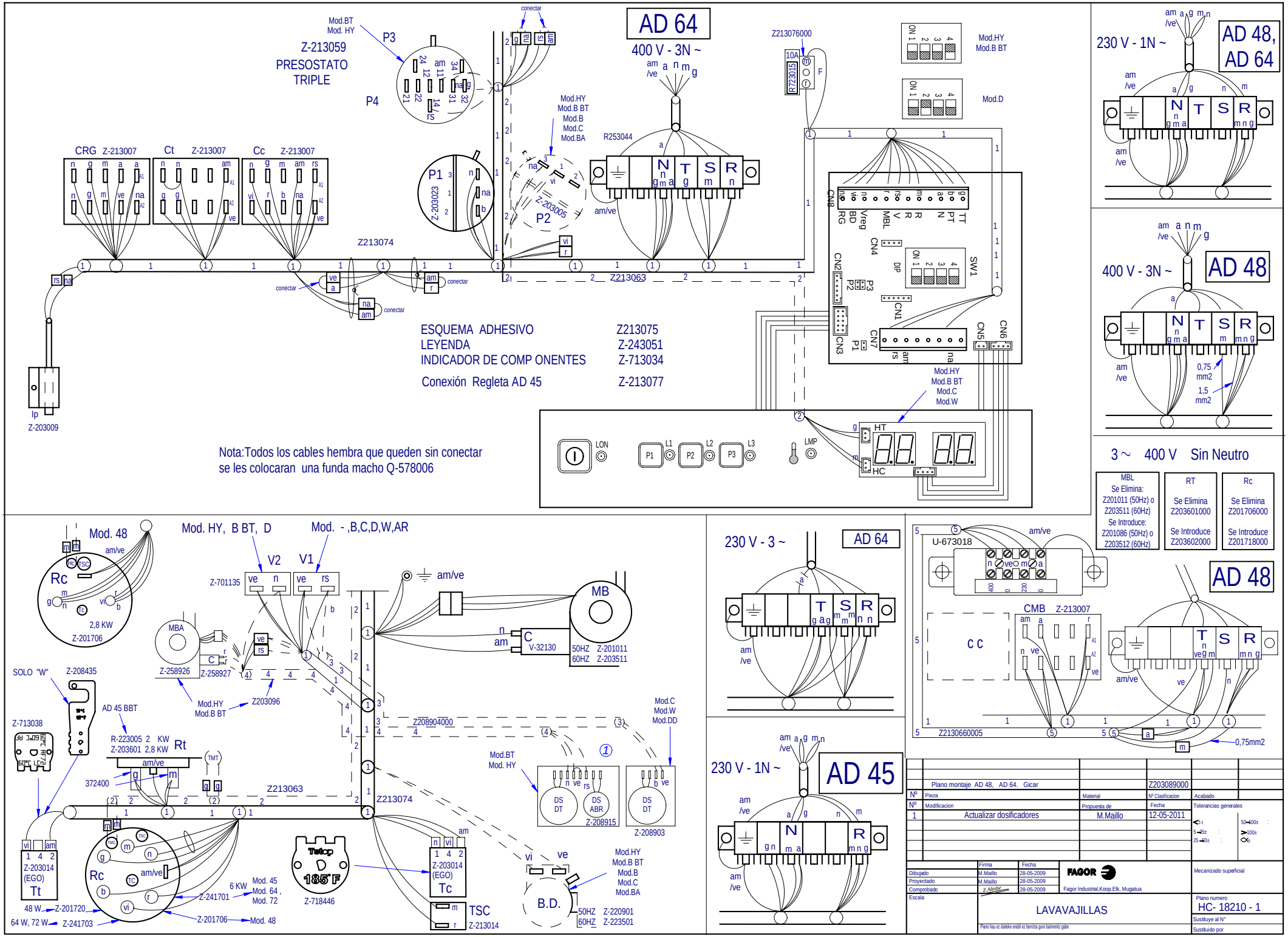
AD 64
400 V - 3N ~
Z-213059
PRESOSTATO
TRIPLE
Mod.BT
Mod. HY
P3
P4
CRG Z-213007
Ct Z-213007
Cc Z-213007
P1
Z-203023
P2
Z-203005
Z213074
Z213063
Z213076000
R253044
Mod.HY
Mod.B BT
Mod.B
Mod.C
Mod.BA
Mod.D
Mod.W
Mod.DD
CN8
CN4
CN2
CN3
CN1
CN7
CN5
CN6
SW1
DIP
ESQUEMA ADHESIVO Z213075
LEYENDA Z-243051
INDICADOR DE COMP ONENTES Z-713034
Conexión Regleta AD 45 Z-213077
Ip
Z-203009
LON
LMP
HT
HC
Nota:Todos los cables hembra que queden sin conectar
se les colocaran una funda macho Q-578006
230 V - 1N ~
AD 48,
AD 64
400 V - 3N ~
AD 48
0,75
mm2
1,5
mm2
3 ~ 400 V Sin Neutro
MBL
Se Elimina:
Z201011 (50Hz) o
Z203511 (60Hz)
Se Introduce:
Z201086 (50Hz) o
Z203512 (60Hz)
RT
Se Elimina
Z203601000
Se Introduce
Z203602000
Rc
Se Elimina
Z201706000
Se Introduce
Z201718000
Mod. 48
Rc
2,8 KW
Z-201706
Mod. HY, B BT, D
Mod. - ,B,C,D,W,AR
V2
V1
Z-701135
MBA
Z-258926
Z-258927
Mod.HY
Mod.B BT
Z203096
MB
V-32130
50HZ Z-201011
60HZ Z-203511
SOLO "W"
Z-208435
AD 45 BBT
Z-713038
R-223005 2 KW
Z-203601 2,8 KW
Rt
372400
Z213063
Z213074
Z208904000
Mod.C
Mod.W
Mod.DD
Mod.BT
Mod. HY
Z-208915
Z-208903
Z-203014
(EGO)
Tt
48 W Z-201720
64 W, 72 W Z-241703
Z-241701
6 KW
Mod. 45
Mod. 64 ,
Mod. 72
Z-201706
Mod. 48
Z-718446
Z-203014
(EGO)
Tc
TSC
Z-213014
B.D.
Mod.HY
Mod.B BT
Mod.B
Mod.C
Mod.BA
50HZ Z-220901
60HZ Z-223501
230 V - 3 ~
AD 64
230 V - 1N ~
AD 45
U-673018
CMB Z-213007
C C
Z2130660005
AD 48
0,75mm2
Plano montaje AD 48, AD 64. Gicar
Z203089000
Nº Pieza
Material
Nº Clasificacion
Acabado
Nº Modificacion
Propuesta de
Fecha
Tolerancias generales
1 Actualizar dosificadores
M.Maillo
12-05-2011
Firma
Fecha
Dibujado M.Maillo 28-05-2009
Proyectado M.Maillo 28-05-2009
Comprobado 28-05-2009
Escala
FAGOR
Fagor Industrial,Koop.Elk, Mugatua
Mecanizado superficial
LAVAVAJILLAS
Plano numero
HC- 18210 - 1
Sustituye al Nº
Sustituido por

LEYENDA APERTURA FRONTAL

	ESPAÑOL	FRANÇAIS	ENGLISH	DEUTSCH	ITALIANO
BD	Bomba desagüe	Pompe de vidange	Drain pump	Abflußpumpe	Pompa scarico
C 1/2/3	Condensador	Condensateur	Condenser	Kondensator	Condensatore
CMB	Contactor bomba lavado	Contacteur pompe lavage	Wash pump contactor	Kontaktschütz Waschpumpe	Contattore pompa lavaggio
Cc 1/2	Contactor calentamiento calderin	Contacteur chauf. surchauffeur	Boiler heating contactor	Kontaktschütz Boilerheizung	Contattore riscaldamento boiler
Ct	Contactor calentamiento tanque	Contacteur chaufage cuve	Tank heating contactor	Kontaktschütz Heizung Tank	Contattore riscaldamento serbatoio
CP	Rele puerta	Relais porte	Door relay	Türrelais	Rele porta
Ds.Det.	Dosificador detergente	Dosseur de detergent	Detergent doser	Dosierer Spülmittel	Dosatore detersivo
E.B	Electrobomba de presion	Electropompe de pression	Electric pressure pump	Elektro-Drucksteigungspumpe	Electropompa pressione
IG	Interruptor general	Interrupteur general	Main switch	Hauptschalter	Interruttore generale
IP	Micro puerta	Micro porte	Door microswitch	Mikroschalter Tür	Micro porta
L1	Piloto de encendido	Voyant funcionement	Operation light	Betriebsanzeigelampe	Spia accensione
L2	Piloto marcha	Voyant demarrage	Start light	Startanzeigelampe	Spia avvio
L3	Piloto maquina preparada	Voyant machine prêt	Light machine ready	Betriebsbereitschaftsanzeigelampe	Pilota macchina preparata
MBL	Bomba lavado	Pompe lavage	Wash pump	Waschpumpe	Pompa lavaggio
M	Motor programador	Moteur du programmateur	Motor programmer	Motor Programmiervorrichtung	Motore programmatore
M Av. R	Motor program. avance rapido	Moteur du progr.avance rapide	Motor program. rapid advance	Motor Programmiervorrich. schneller Vorlauf	Motore programmatore avanzamento rapido
M1	Micro programador marcha	Micro du programm. de marche	Micro programmer on	Motor Programmiervorrich. Betrieb	Micro programma. di funzionamento
M2	Micro programador lavado	Micro du programm. de lavage	Micro programmer wash	Motor Programmiervorrich. Waschen	Micro programmatore di lavaggio
M3	Micro programador aclarado	Micro du programm. de rinçage	Micro programmer on	Motor Programmiervorrich. Spülen	Micro programmatore di risciacquo
M4	Micro programador Termo-stop	Micro du programm. Termo-stop	Micro programmer Termo-stop	Motor Programmiervorrich. Thermo-Stop	Micro programmatore Termo-stop
M5	Micro programador avance	Micro du programm. avance	Micro programmer advance	Motor Programmiervorrich. Vorlauf	Micro programmatore avanzamento
P, P1, P5	Presostato	Pressostat	Pressure switch	Druckwächter	Pressostato
P2, P3, P4	Presostato limitador	Pressostat de securité	Hi-limit pressure switch	Begrenzer Druckwächter	Pressostato limitatore
RC	Resistencia calderin	Resistance surchauffeur	Boiler heating element	Heizwiderstand Boiler	Resistenza boiler
RT	Resistencia tanque	Resistance cuve	Tank heater	Heizwiderstand Tank	Resistenza serbatoio
Tt	Termostato tanque	Thermostat de cuve	Tank thermostat	Thermostat Tank	Termostato serbatoio
TC	Termostato calderin	Thermostat surchauffeur	Boiler thermostat	Thermostat kessel	Termostato boiler
TSC	Limitador calderin	Limiteur surchauffeur	Boiler Hi-limit	Begrenzer Boiler	Limitatore boiler
TSTP	Termostato termo-stop	Thermostat Termo-stop	Termo-stop Thermostat	Thermostat Termo-stop	Termostato Termo-stop
V	Electrovalvula llenado y aclarado	Electrovan. remplissage rinçage	Fill and rinse valve	Elektroventil Füllen und Spülen	Elettroval. riempimento e risciacquo
COLOR	COLORES	COULEURS	COLOUR	FARBEN	COLORE
a =	Azul	Bleu	Blue	Blau	Blu
am =	Amarillo	Jaune	Yellow	Gelb	Giallo
am/ve =	Amarillo/verde	Jaune / vert	Yellow / green	Gelb/grün	Giallo/verde
b =	Blanco	Blanc	White	Weiß	Bianco
g =	Gris	Gris	Grey	Grau	Grigio
m =	Marrón	Marron	Brown	Braun	Marrone
n =	Negro	Noir	Black	Schwarz	Nero
na =	Naranja	Orange	Orange	Orange	Arancio
r =	Rojo	Rouge	Red	Rot	Rosso
rs =	Rosa	Rose	Pink	Rosa	Roseo
ve =	Verde	Vert	Green	Grün	Verde
vi =	Violeta	Violet	Purple	Violett	Viola

Z243051000