lamber

Dishwashers

Ed.
01/2016

Rev. C

from
01/2008

GS900

SPARE PARTS

DSP4

CE

lamber	WASH COMPONENTS	MOD. GS900	TAV. 1 C ED. 01/2016

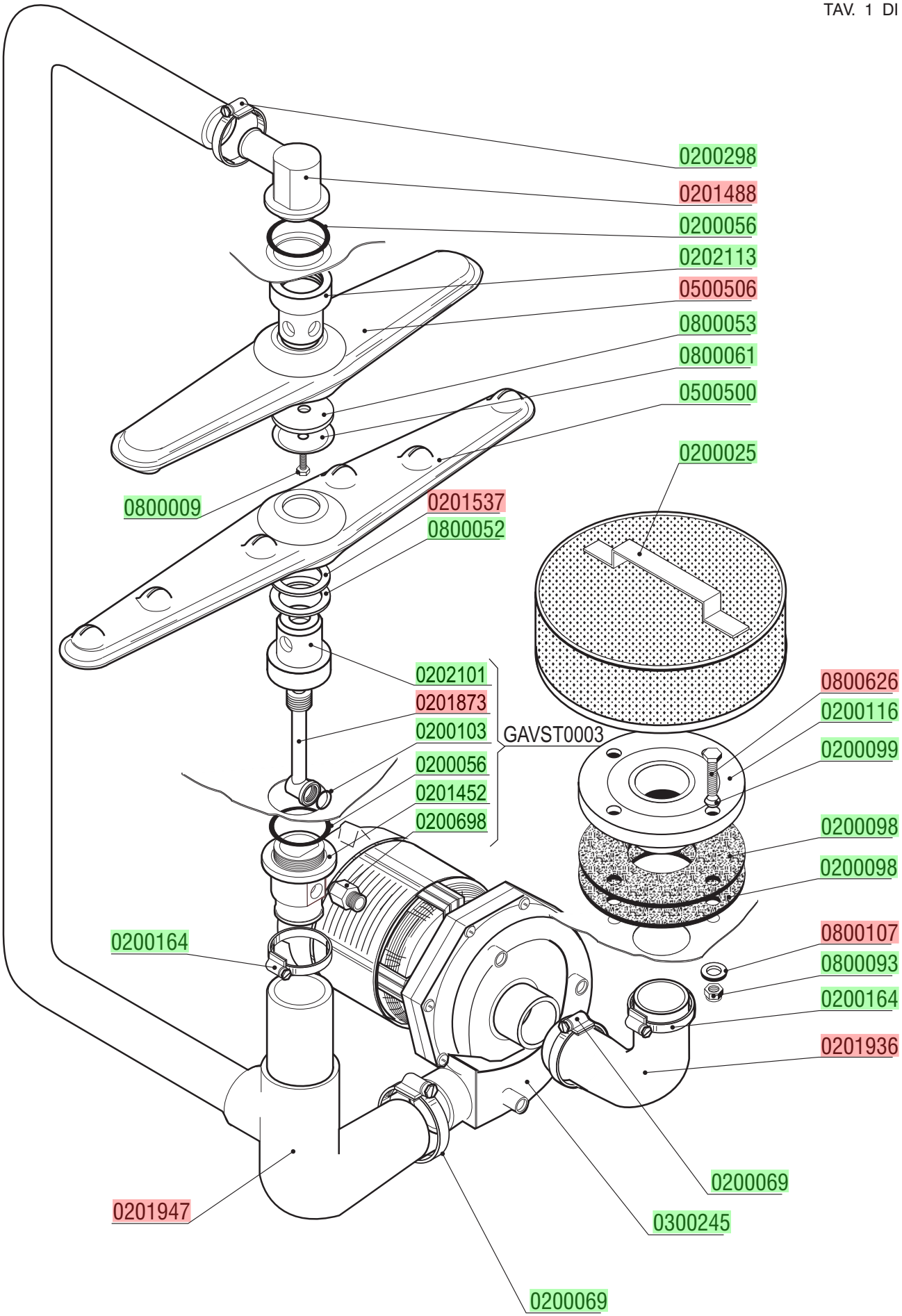

lamber	RINSE COMPONENTS	MOD. GS900	TAV. 2 C ED. 01/2016

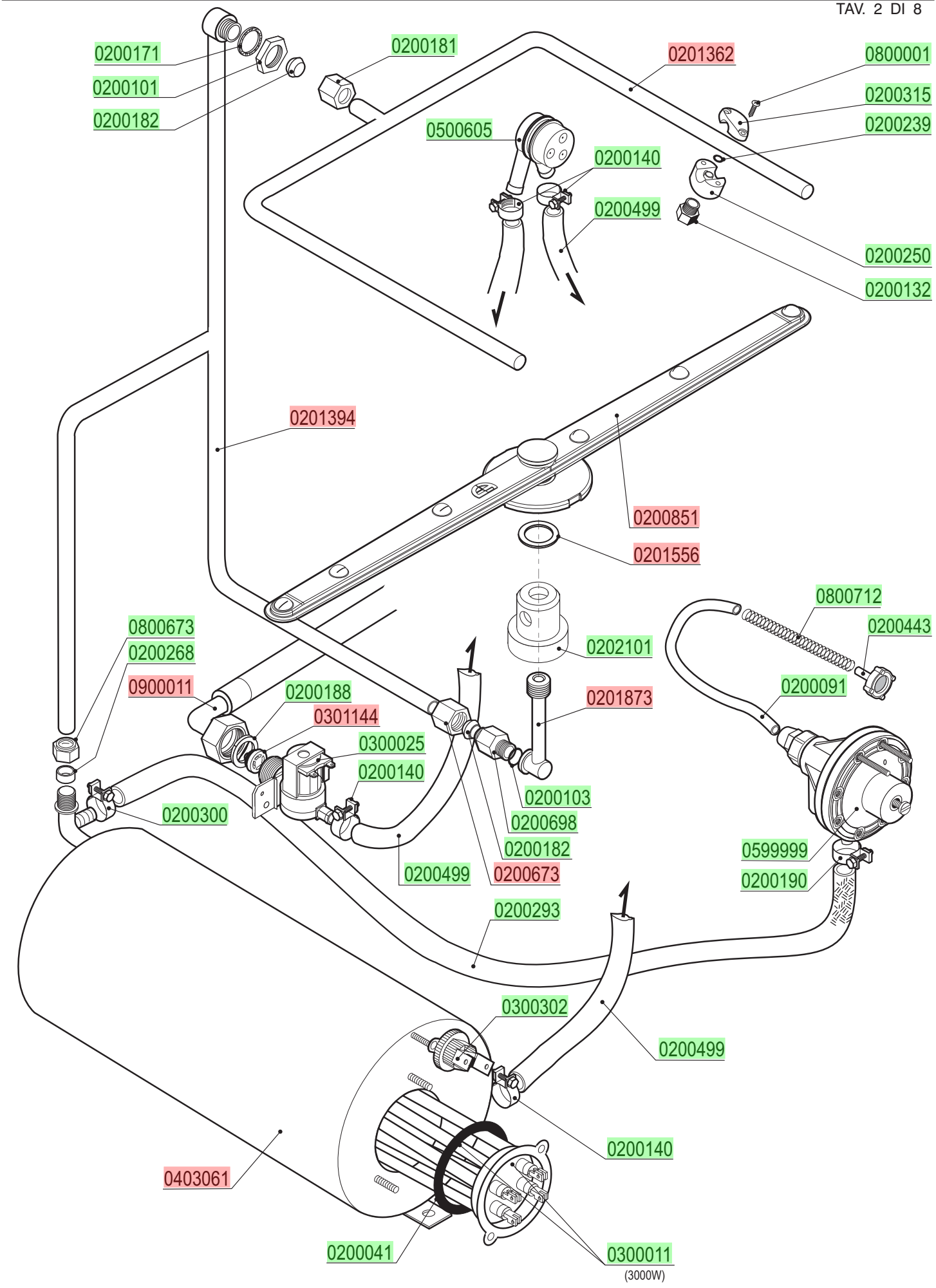

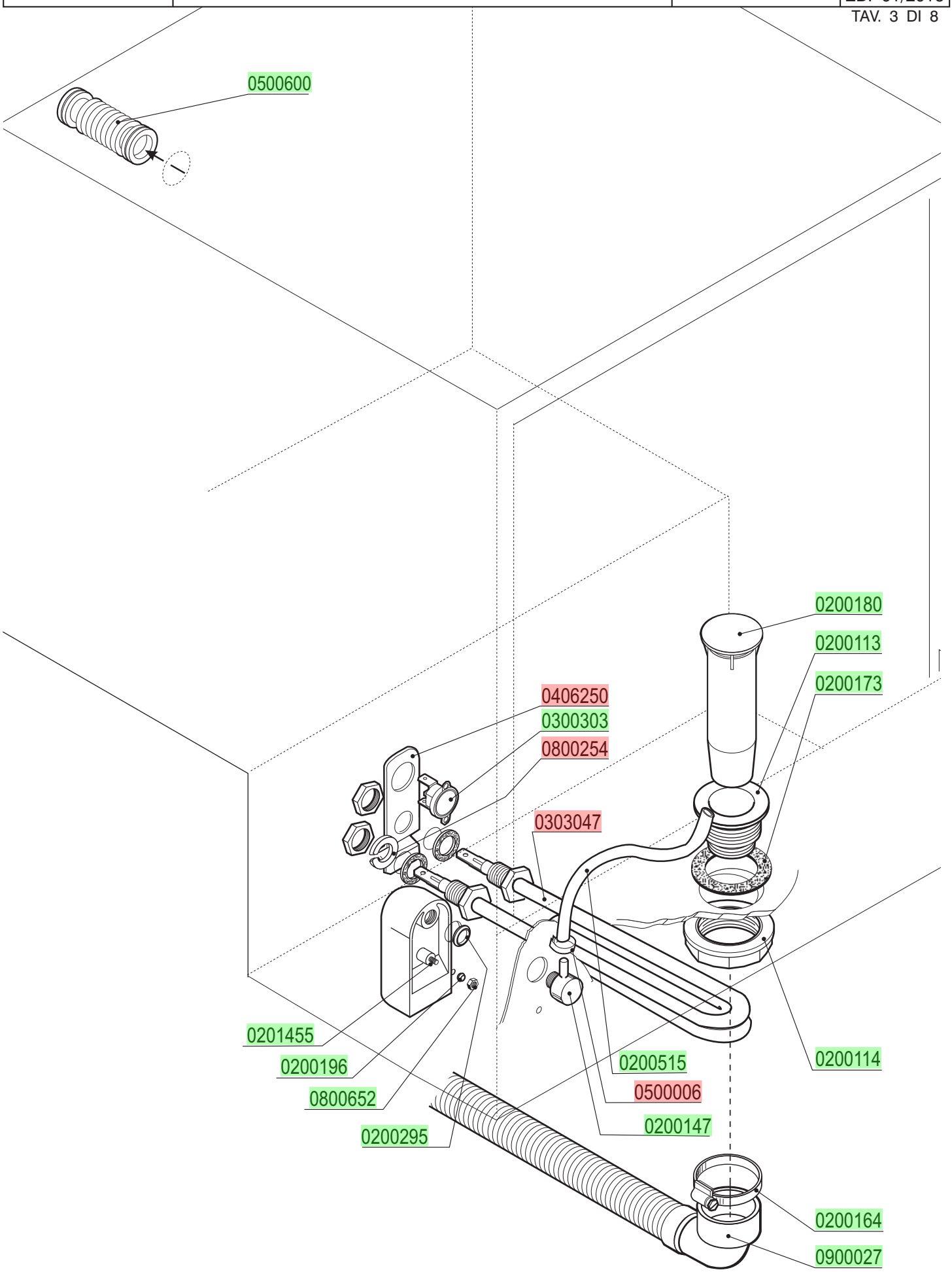
0500600
0200180
0200113
0200173
0406250
0300303
0800254
0303047
0201455
0200196
0800652
0200295
0200515
0500006
0200147
0200114
0200164
0900027

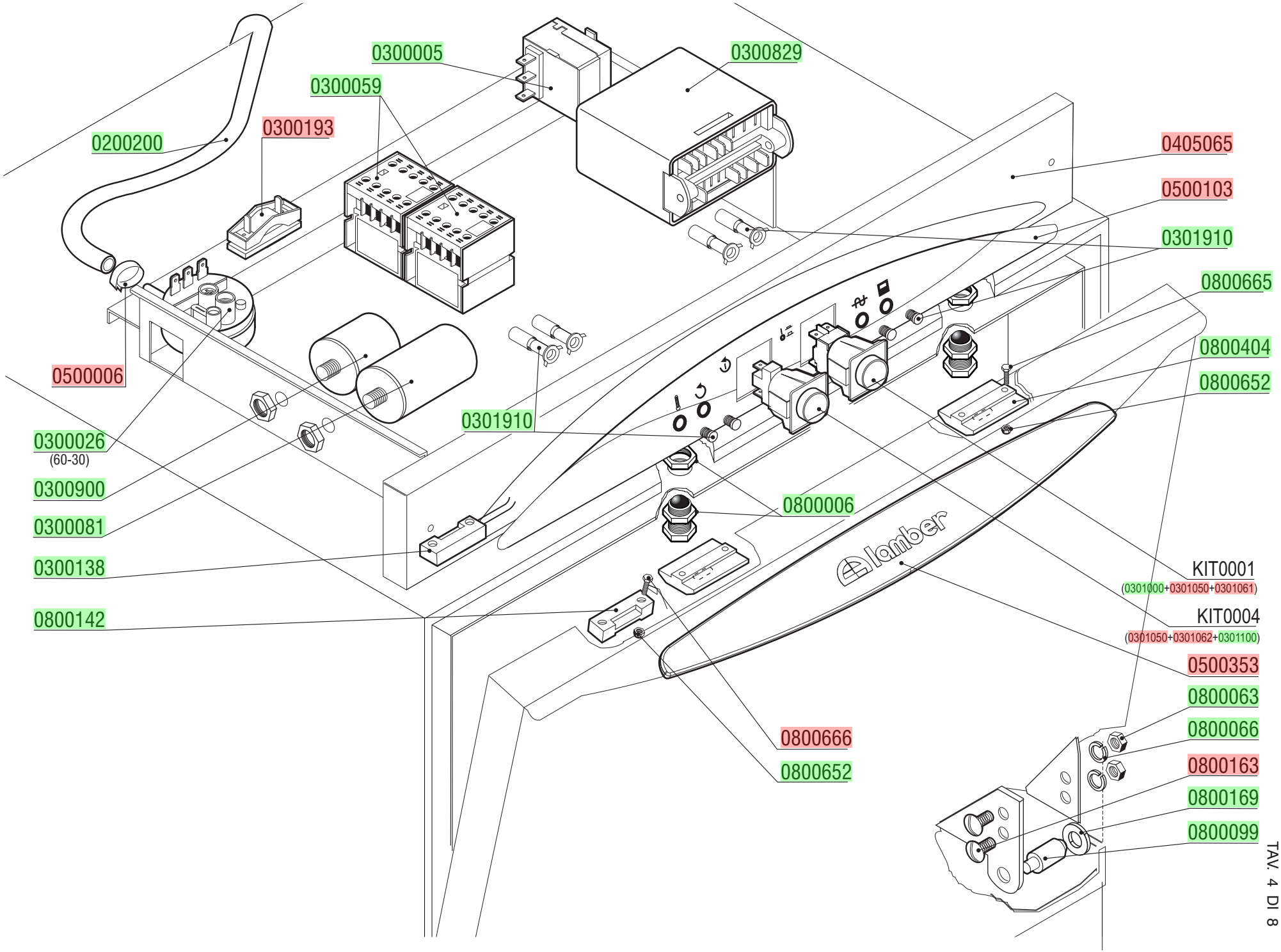

lamber

CONTROL BOX

MOD. GS900

TAV. 4 C

ED. 01/2016

TAV. 4 DI 8

lamber	DRAIN PUMPE PARTS	MOD. GS900	TAV. 5 C ED. 01/2016

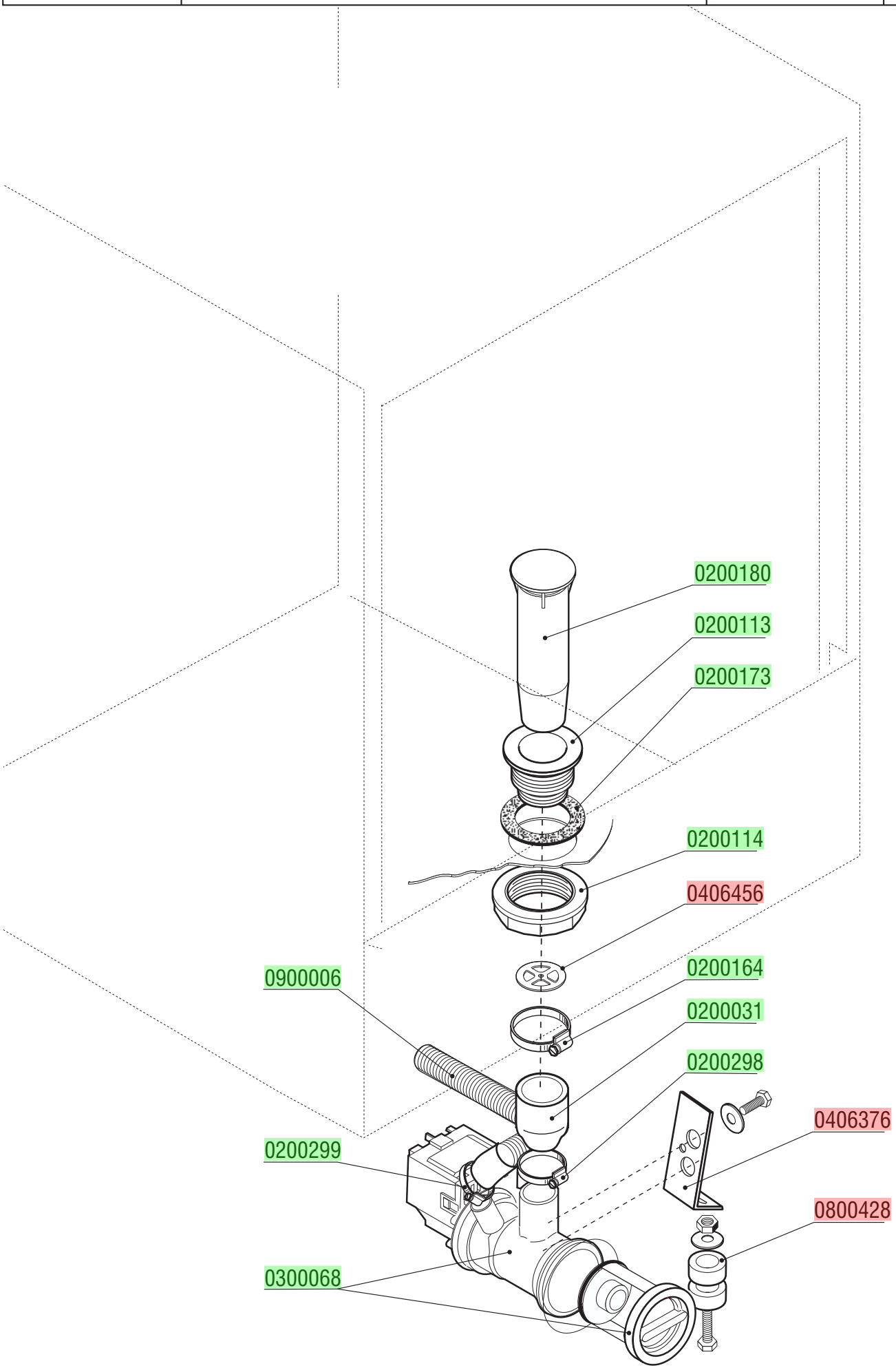

lamber	HOOD	MOD. GS900	TAV. 6 C ED. 01/2016

TAV. 6 DI 8

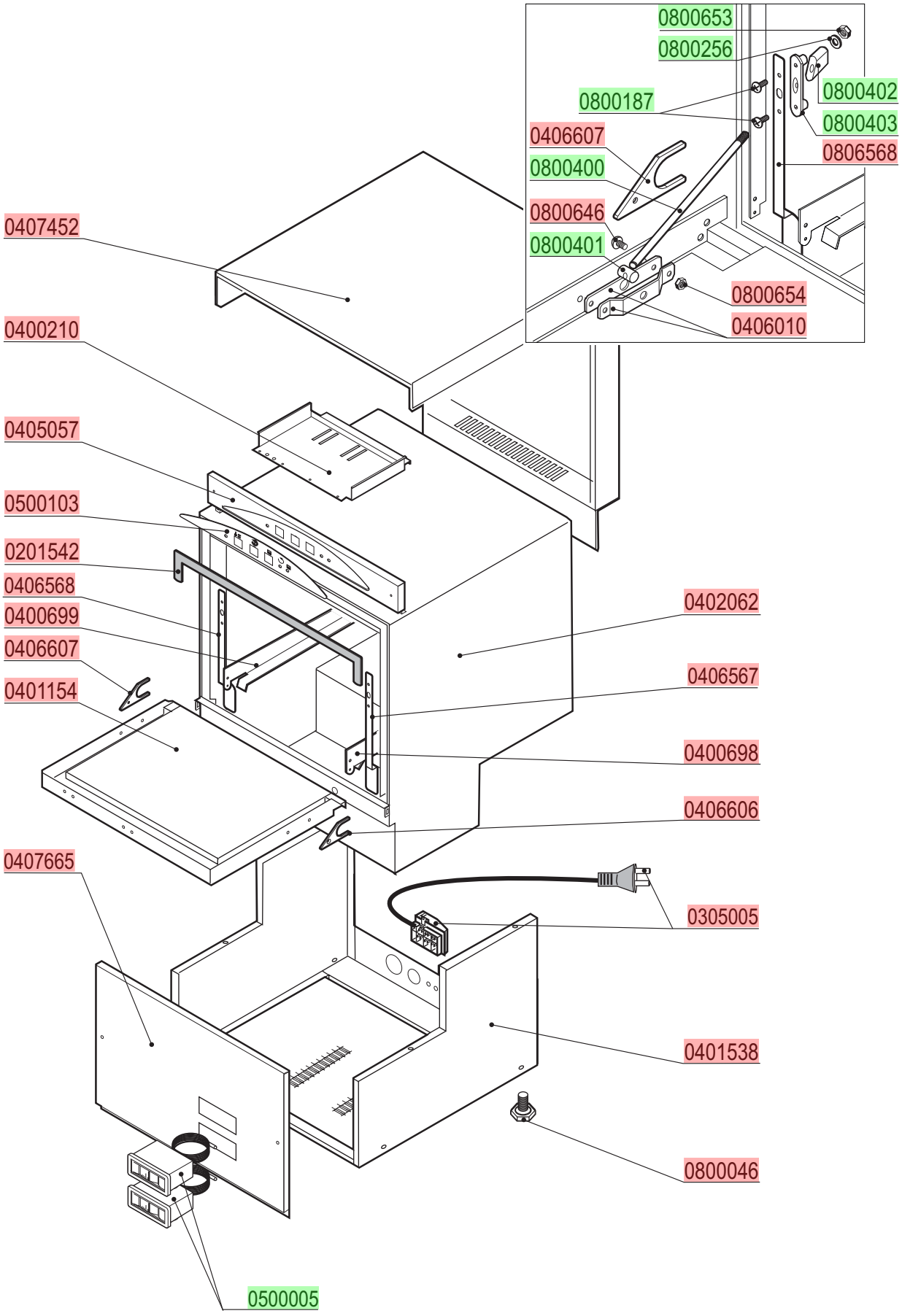

lamber	DETERGENT PUMP	MOD. GS900	TAV. 7 C ED. 01/2016

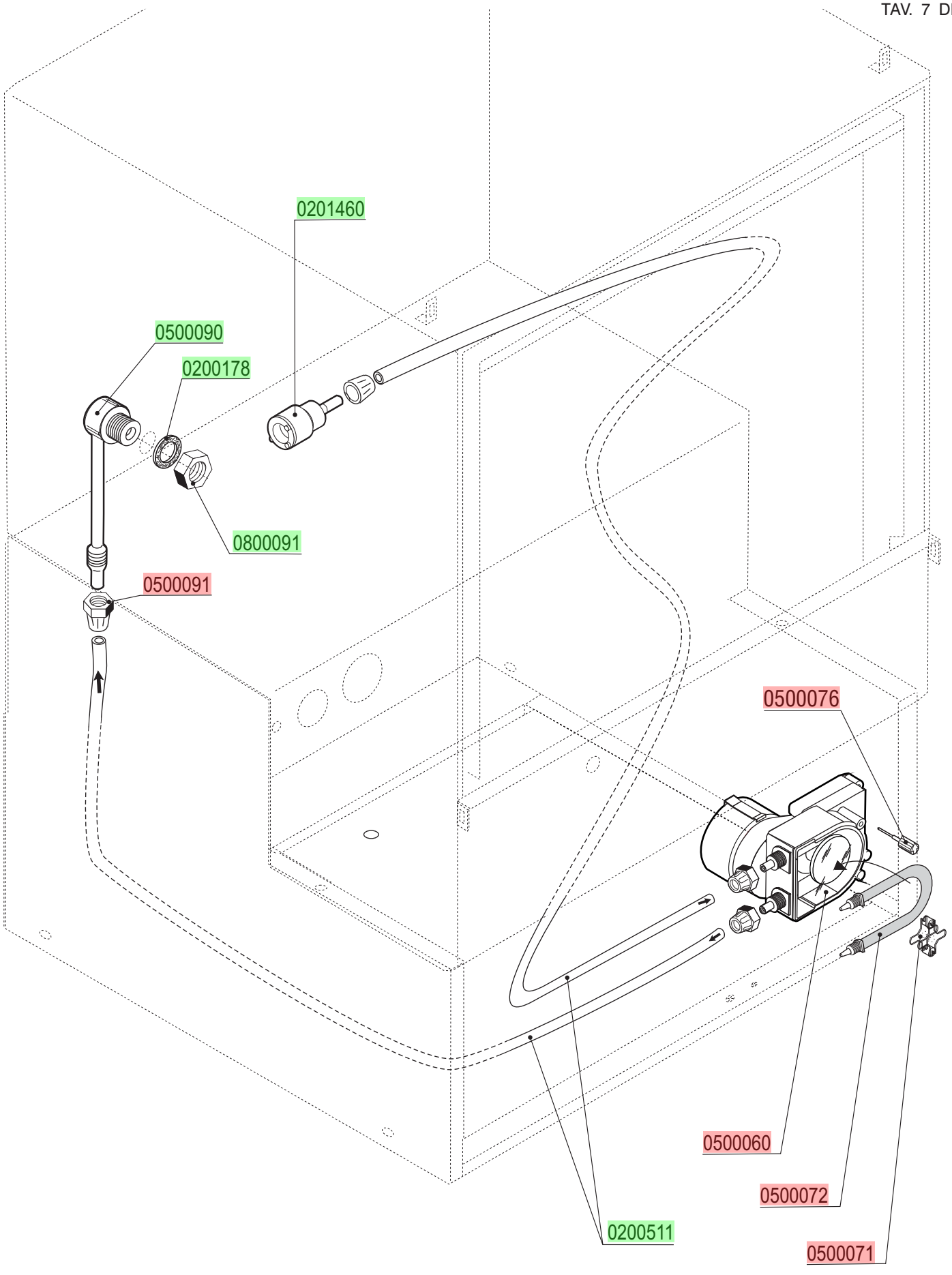

1 cm³/sec=3,6 Lt/h

lamber	WASHING PUMP	MOD. GS900	TAV. 8 C ED. 01/2016

TAV. 8 DI 8

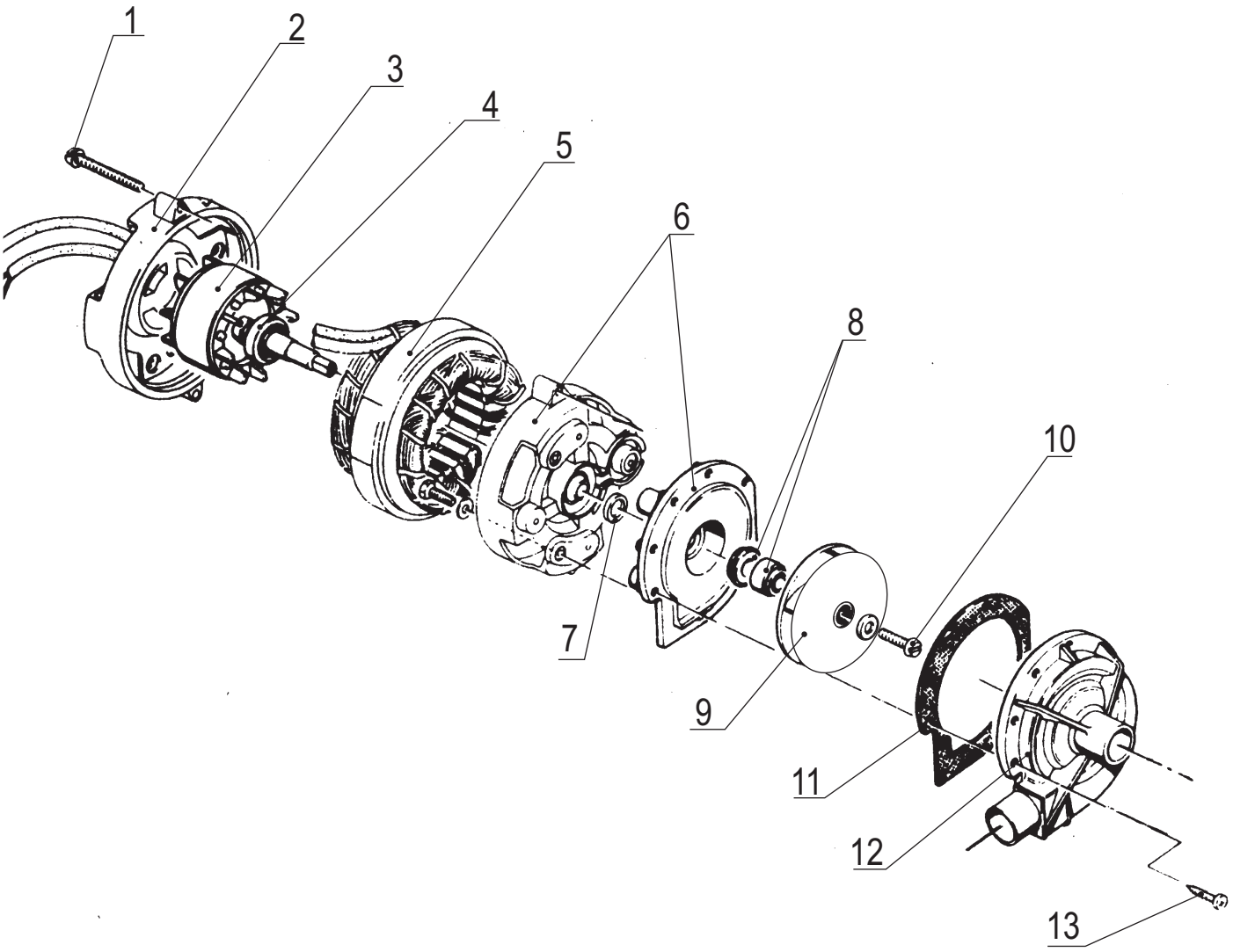

	CODE	Power		Pump delivery	Voltage
		Hp	W	lt/min	Volt
3983 14.11-sx	0300245	0,50	370	200	230 V/1~ 50Hz

Pos.	Codice	Description
1		Screw
2		Back shield
3		Rotor
4		Ball bearing
5		Stator
6		Pump support
7		Split ring
8	0200340	Pump seal group
9		Impeller
10		Screw
11	0209902	OR-joint
12	0200216	Pump body
13		Screw

Cod.0300245

