SD 30

R 22 A VERSION

SPARE PARTS LIST
CATALOGORIAMBI
CATALOGUE PIÈCES DÉTACHÉES
ERSATZTEILENKATALOG

REV. 01/1991

SD30 - SD30W

01 - 91

TAVOLA 1

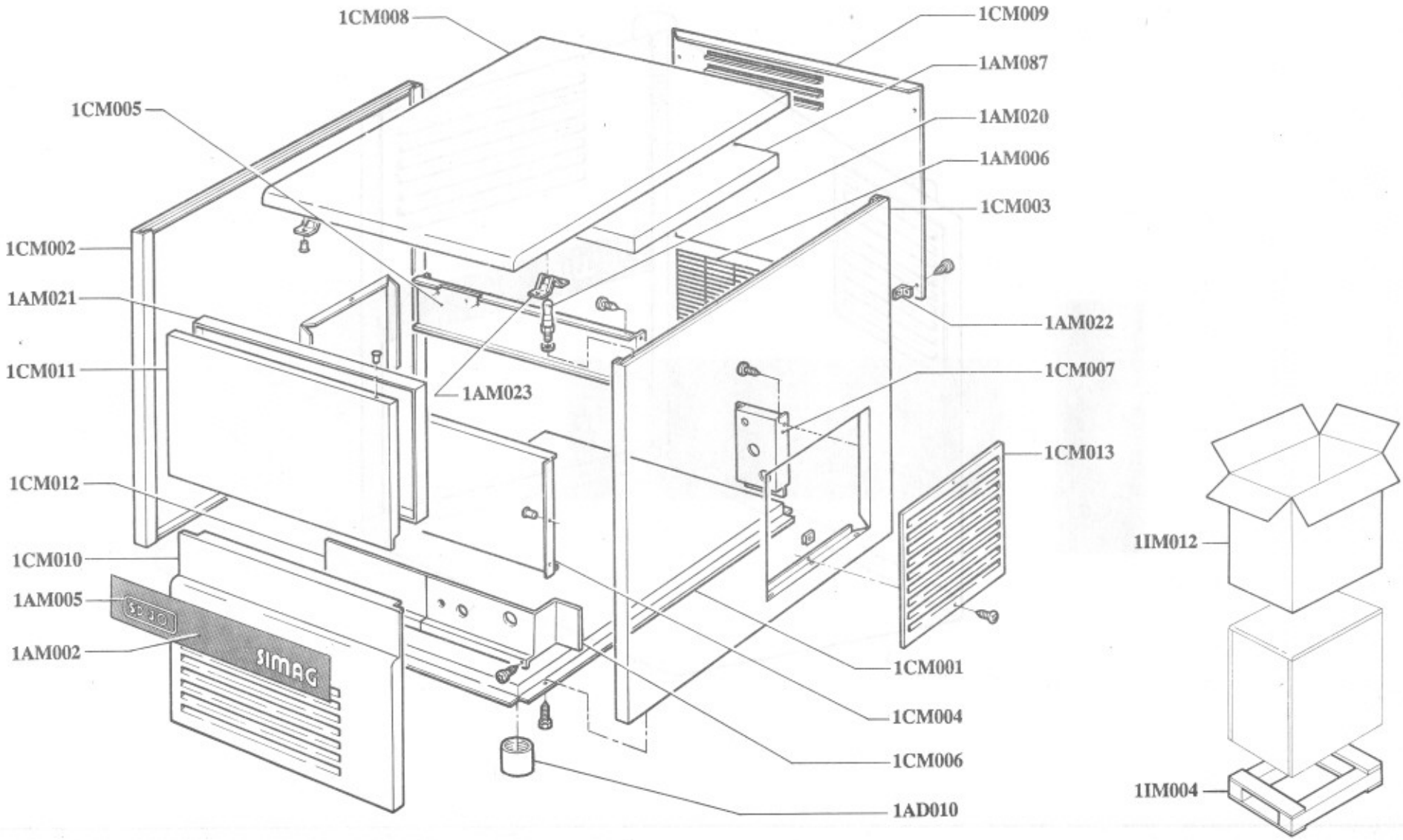

SD30 - SD30W

01 - 91

TAVOLA 1

COD.	DESCRIZIONE	DENOMINATION	DESCRIPTION	BEZEICHNUNG	DESCRIPCION
1AD010	Piede regolabile	*Pied réglable*	Levelling foot	*Gerätefuss*	Pie regulable
1AM002	Targa serigrafata	*Plaquette marque*	Name plate facia	*Markenschild*	Banda Simag
1AM005	Targhetta modello	*Plaquette d'identification*	Model badge	*Modellbezeichnung*	Etiqueta modelo
1AM006	Griglia posteriore	*Grille postérieure*	Rear grill	*Hinteres Belüftungsgitter*	Rejilla posterior
1AM020	Perno	*Axe*	Stud	*Stift*	Perno
1AM021	Controsportello	*Contreporte*	Door internal plate	*Hintere Seite Entnahmenklappe*	Contrapuerta
1AM022	Piastrine angolari	*Plaquette angulaires*	Retaining bracket	*Eckhalterung*	Ángulo
1AM023	Molla	*Ressort*	Retainer	*Feder*	Pinza perno
1AM087	Pannello isolante	*Panneau isolant*	Top panel insulation	*Isolierung*	Panel aislamiento
1CM001	Piastra di base	*Plaque de base*	Base	*Grundplatte*	Base
1CM002	Fiancata sinistra	*Joue gauche*	Left side panel	*Linke Gehäuseseite*	Lateral izquierdo
1CM003	Fiancata destra	*Joue droite*	Right side panel	*Rechte Gehäuseseite*	Lateral derecho
1CM004	Traverso anteriore	*Traverse antérieure*	Front support	*Vordere Verbindungsstrebe*	Soporte anterior
1CM005	Traverso supporto pompa	*Traverse support pompe*	Pump support panel	*Halterung Pompe*	Soporte sup. bomba
1CM006	Squadretta supporto timer	*Equerre*	Support	*Halterung*	Escuadra
1CM007	Supporto scarico	*Support vidange*	Exhaust support	*Auslaufhalterung*	Soporte conexiones
1CM008	Coperchio	*Couvercle*	Top panel	*Deckel*	Tapa superior
1CM009	Pannello posteriore	*Panneau postérieur*	Rear panel	*Hintere Abdeckung*	Panel posterior
1CM010	Pannello anteriore	*Panneau frontal*	Front panel	*Vordere Gehäuseabdeckung*	Panel frontal
1CM011	Sportello	*Porte*	Door	*Entnahmeklappe*	Puerta
1CM012	Squadretta parti elettriche	*Support éléments éléctriques*	Electric parts support	*Halterung Elektrische Teile*	Esquadra caja electrica
1CM013	Pannello areazione	*Panneau d'areation*	Ventilation panel	*Belüfterungsgitter*	Panel ventilación
1IM004	Base imballo	*Socle*	Pallet	*Palette*	Palet
1IM012	Scatola imballo	*Caisse carton*	Carton	*Karton*	Embalaje

SD30 - SD30W

01 - 91

TAVOLA 2

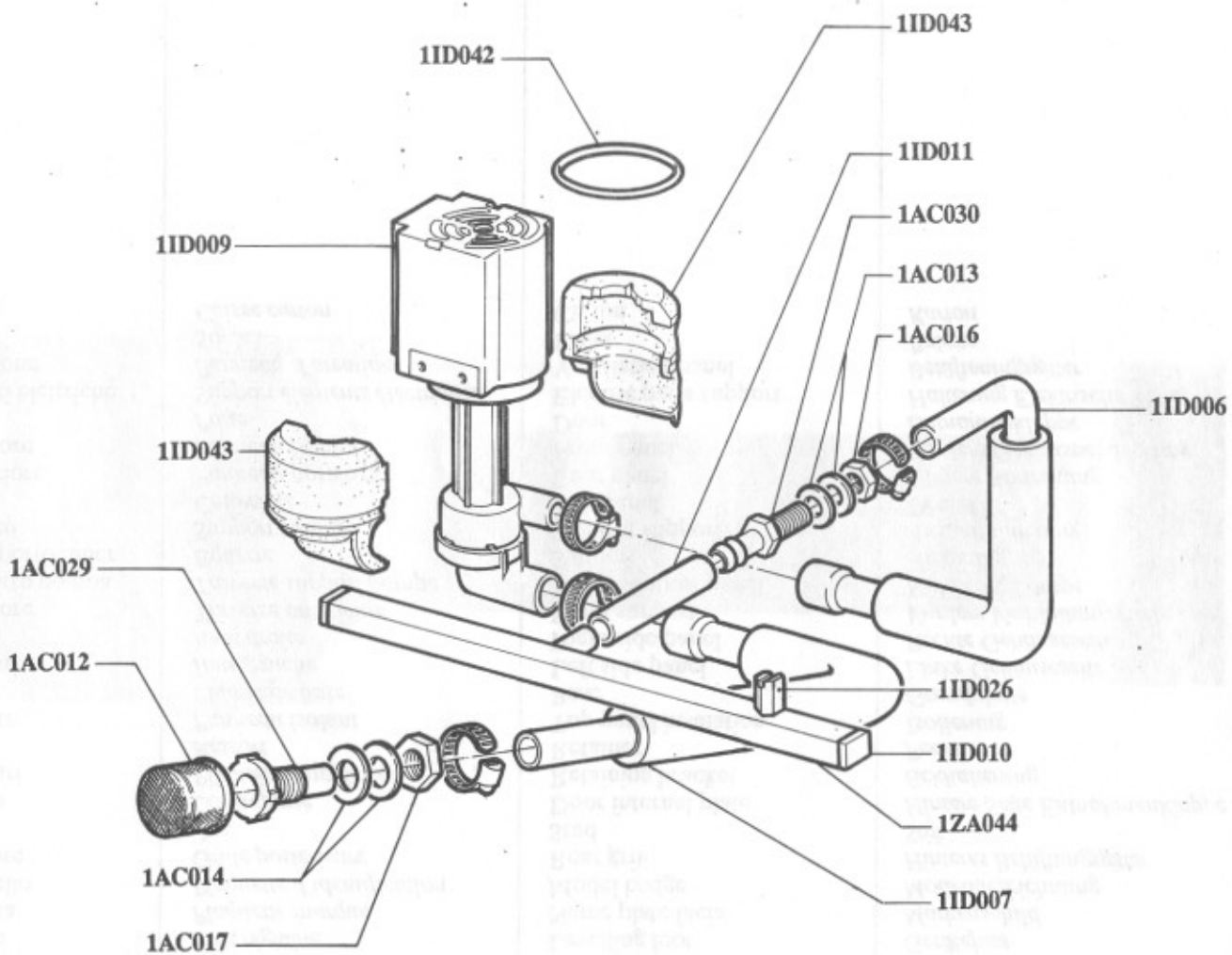

SD30 - SD30W

01 - 91

TAVOLA 2

COD.	DESCRIZIONE	DENOMINATION	DESCRIPTION	BEZEICHNUNG	DESCRIPCION
1AC012	Filtro aspirazione pompa	*Filtre aspiration pompe*	Pump feeding filter	*Pumpenansaugfilter*	Filtro asp. bomba
1AC013	Rondella	*Rondelle*	Washer	*Unterlegscheibe*	Arandela
1AC014	Rondella	*Rondelle*	Washer	*Unterlegscheibe*	Arandela
1AC016	Dado	*Ecrou*	Nut	*Mutter*	Tuerca
1AC017	Dado	*Ecrou*	Nut	*Mutter*	Tuerca
1AC029	Racc. aspirazione pompa	*Raccord aspiration pompe*	Pump feeding pipe-fitting	*Ansauganschlusstück*	Racord asp. bomba
1AC030	Racc. mandata pompa	*Raccord refoulement pompe*	Pump inlet water pipe-fitting	*Pumpenabflussanschlusstück*	Racord. imp. bom.
1ID006	Tubo mandata pompa	*Tuyau de refoulement pompe*	Pump inlet water pipe	*Pumpenabflusschlauch*	Tubo impul. bomba
1ID007	Tubo aspirazione pompa	*Tuyau d'aspiration pompe*	Pump feeding pipe	*Pumpenansaugschlauch*	Tubo asp. bomba
1ID009	Pompa	*Pompe*	Pump	*Pompe*	Bomba
1ID010	Tappo per collettore	*Bouchon pour collecteur*	Plug manifold	*Stopfen*	Tapón colector
1ID011	Tubo alimentazione collettore	*Tuyau d'alimentation eau*	Spray bar feeding pipe	*Anschlusschlauch Kollektor*	Tubo aliment. dist.
1ID026	Spruzzatori	*Gicleurs*	Sprayers	*Sprühdüsen*	Aspersores
1ID042	Anello O.R.	*Joint torique*	O-ring	*O-ring*	Junta
1ID043	Isolamento pompa	*Coupelle pour pompe*	Pump cover insulation	*Pumpenisolierung*	Aislamiento bomba
1ZA044	Collettore	*Collecteur*	Spray bar	*Kollektor*	Colector

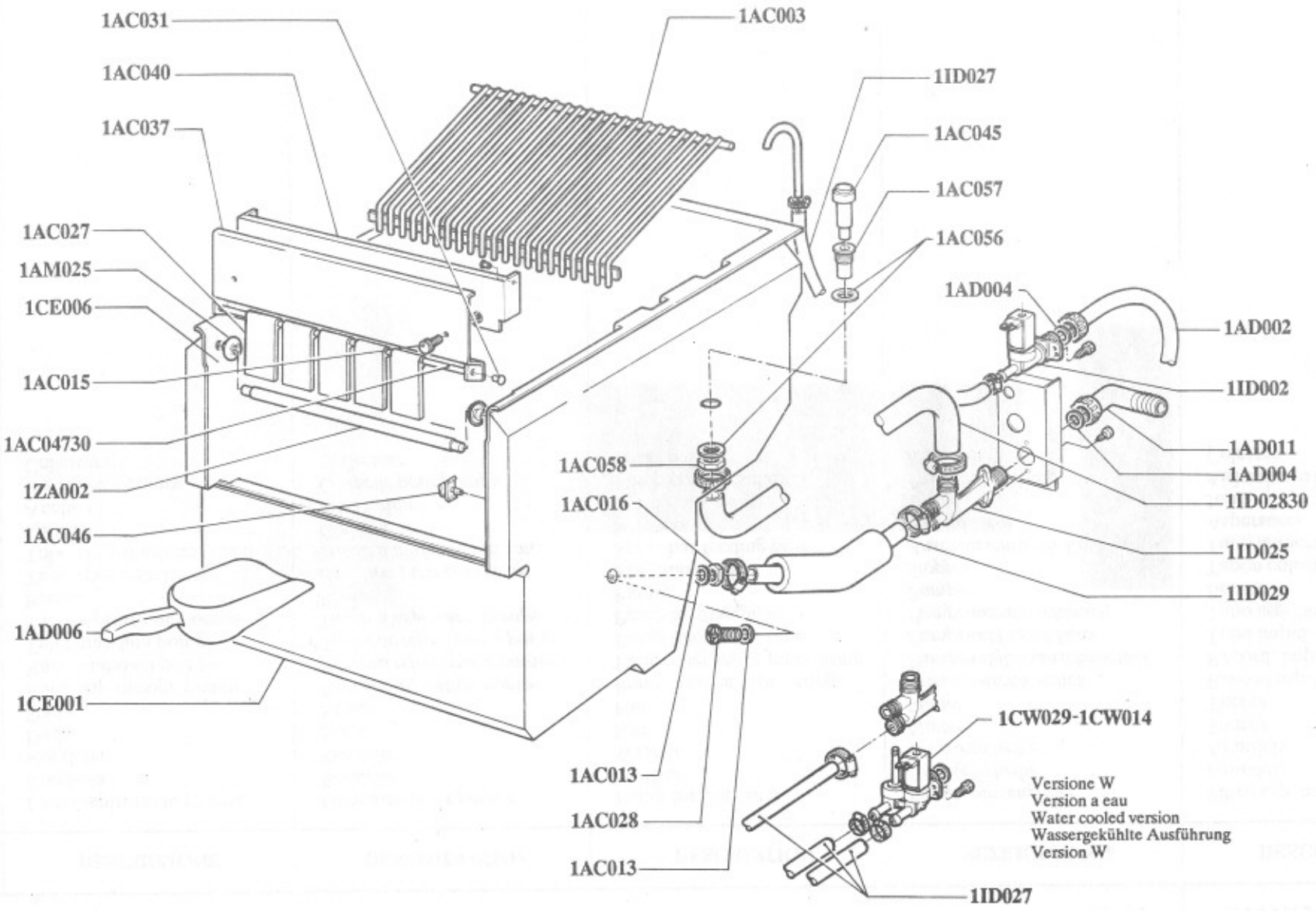
1AC031
1AC040
1AC037
1AC027
1AM025
1CE006
1AC015
1AC04730
1ZA002
1AC046
1AD006
1CE001
1AC003
1ID027
1AC045
1AC057
1AC056
1AD004
1AD002
1ID002
1AD011
1AD004
1ID02830
1ID025
1ID029
1AC058
1AC016
1AC013
1AC028
1AC013
1CW029-1CW014
Versione W
Version a eau
Water cooled version
Wassergekühlte Ausführung
Version W
1ID027

SD30 - SD30W

01 - 91

TAVOLA 3

COD.	DESCRIZIONE	DENOMINATION	DESCRIPTION	BEZEICHNUNG	DESCRIPCION
1AC003	Griglia scorrimento cubetti	*Grille glissement glaçons*	Cube deflector	*Abgleitgrill*	Rejilla caida cubitos
1AC013	Rondella	*Rondelle*	Washer	*Unterlegscheibe*	Arandela
1AC015	Vite godronata	*Vis moletée*	Knurled screw	*Schraube*	Tornillo
1AC016	Dado	*Ecrou*	Nut	*Mutter*	Tuerca
1AC027	Bandierina	*Lamelle*	Spray curtain flap	*Abdeckklappe*	Aleta
1AC028	Racc. scarico contenitore	*Raccord vidange conteneur*	Bin exhaust pipe fitting	*Anschlüsstück Behälter*	Racord desag. deposito
1AC031	Bottone	*Bouton*	Bar pins	*Befestigung Achse*	Tapón
1AC037	Supporto bandierine	*Support lamelles*	Spray curtain support	*Abdeckklappen Halterung*	Soporte aletas
1AC040	Supporto evaporatore	*Support évaporateur*	Evaporator support	*Verdampferauflage*	Soporte evaporador
1AC045	Troppo pieno	*Trop-plein*	Overflow exhaust pipe	*Überlauf*	Rebosadero
1AC046	Fermatubo	*Attache de tube*	Pipe fixing	*Behälterthermostathalter*	Fijación tubos
1AC04730	Tubo ottone	*Tube en laiton*	Spray curtain bar	*Abdeckklappenhalter*	Barra aletas
1AC056	Rondella	*Rondelle*	Washer	*Unterlegscheibe*	Arandela
1AC057	Raccordo scarico t. pieno	*Raccord écoulem. trop-plein*	Overflow exhaust	*Überlaufrohr*	Racord desag. rebosad
1AC058	Dado	*Ecrou*	Nut	*Schraube*	Tornillo
1AD002	Tubo alimentazione acqua	*Tuyau alimentation eau*	Water supply pipe	*Wasseranschlusschlauch*	Tubo alimentación agua
1AD004	Guarnizione	*Joint*	Gasket	*Dichtung*	Junta
1AD006	Sessola	*Sasse*	Ice scoop	*Eisschaufel*	Pala
1AD011	Curva con ghiera	*Coude avec bague*	Elbow with ring nut	*Krümmer*	Codo
1AM025	Passatubo	*Passe-tuyau*	Retainer for door bar	*Halterung*	Pasatubo
1CE001	Isolamento cella	*Isolation*	Insulation	*Isolierung*	Aislamiento
1CE006	Cella	Chambre	Bin	*Zelle*	Depósito
1CW014	Regolatore	*Regolateur*	Regulator	*Regler*	Restrictor
1CW029	Elettrovalvola doppia	*Electrovanne double*	Double electric valve	*Elektroventil*	Electroválvula doble
1ID002	Elettrovalvola	*Electrovanne*	Electric valve	*Elektromagnetventil*	Electroválvula
1ID025	Scarico acqua	*Ecoulement eau*	Water exhaust	*Wasserablauf*	Desagüe
1ID027	Tubo	*Tube*	Pipe	*Schlauch*	Tubo
1ID02830	Tubo	*Tube*	Pipe	*Schlauch*	Tubo
1ID029	Tubo	*Tube*	Pipe	*Schlauch*	Tubo
1ZA002	Asta sportello	*Tige porte*	Door support bar	*Klappenachse*	Tubo soporte puerta

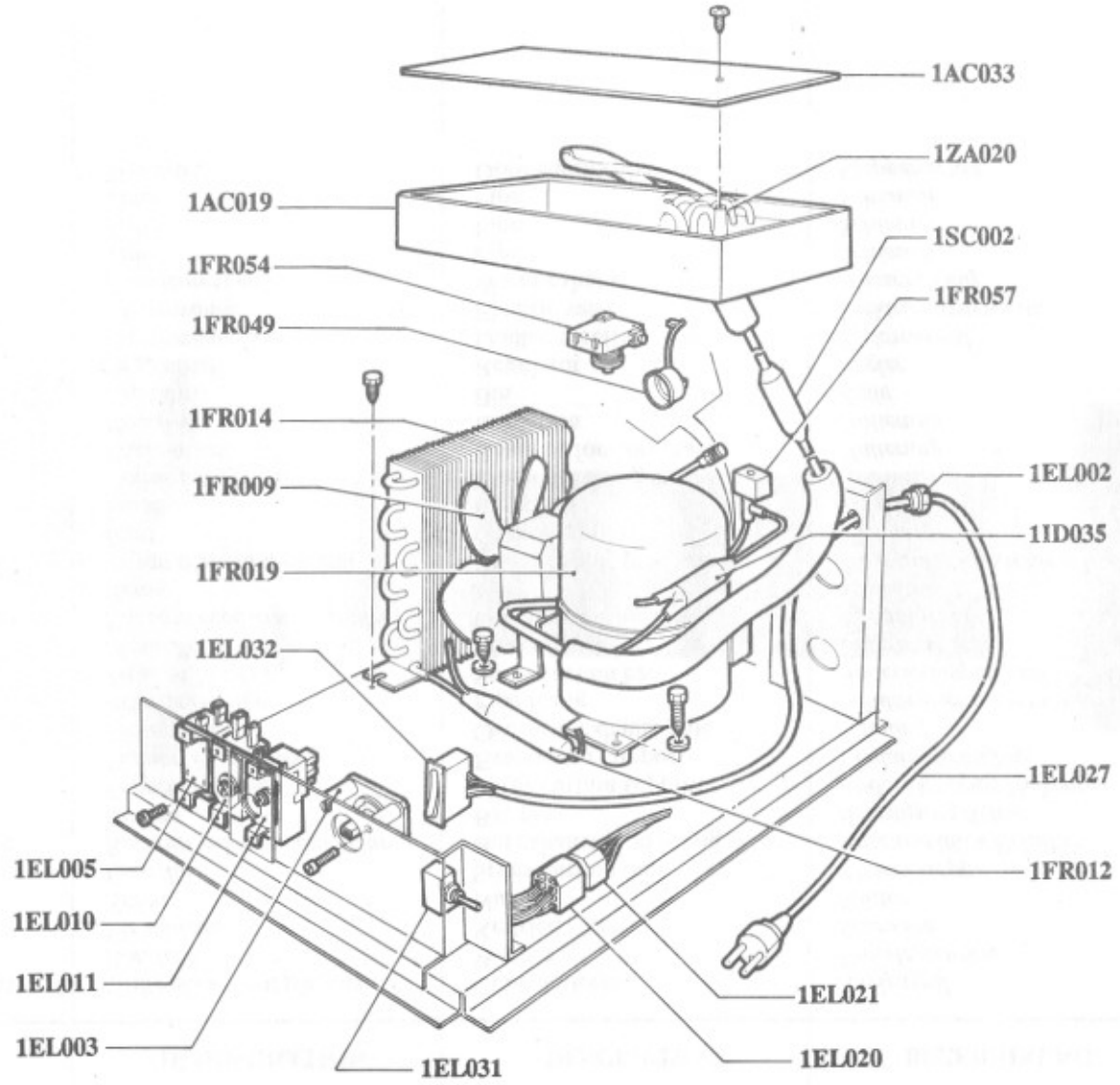
1AC033
1ZA020
1AC019
1SC002
1FR054
1FR057
1FR049
1FR014
1EL002
1FR009
1ID035
1FR019
1EL032
1EL027
1FR012
1EL005
1EL010
1EL011
1EL021
1EL003
1EL031
1EL020

SD30

01 - 91

TAVOLA **4**

COD.	DESCRIZIONE	DENOMINATION	DESCRIPTION	BEZEICHNUNG	DESCRIPCION
1AC019	Guarnizione evaporatore	*Joint d'évaporateur*	Evaporator packing	*Verdampferdichtung*	Bandeja evaporador
1AC033	Coprievaporatore	*Cache-évaporateur*	Evaporator top	*Verdampferabdeckung*	Tapa evaporador
1EL002	Fissacavo	*Serre-câble*	Cable terminal ring	*Kabelklemme*	Tuerca fijación cab.
1EL003	Timer	*Minuterie*	Timer	*Timer*	Temporizador
1EL005	Pressostato	*Pressostat*	Pressure gauge	*Druckwächter*	Presostato
1EL010	Termostato contenitore	*Thermostat conteneur*	Bin thermostat	*Behälterthermostat*	Termostato depósito
1EL011	Termostato evaporatore	*Thermostat évaporateur*	Evaporator thermostat	*Verdampferthermostat*	Termostato evaporador
1EL020	Cablaggio	*Câblage*	Wiring	*Verkabelung*	Cableado
1EL021	Cablaggio	*Câblage*	Wiring	*Verkabelung*	Cableado
1EL027	Cavo alimentazione	*Câble d'alimentation*	Electric cable	*Kabel*	Cable alimentación
1EL031	Interruttore	*Interrupteur*	Switch	*Schalter*	Interruptor limpieza
1EL032	Interruttore luminoso	*Interrupteur*	Switch	*Schalter*	Interruptor ON/OFF
1FR009	Motoventilatore	*Moto-ventilateur*	Electric fan	*Lüfter*	Motoventilador
1FR012	Filtro	*Filtre*	Filter	*Filter*	Filtro
1FR014	Condensatore	*Condenseur*	Air condenser	*Kondensator*	Condensador
1FR019	Compressore	*Compresseur*	Compressor	*Kompressor*	Compresor
1FR049	Protettore termico	*Protection thermique*	Thermic protector	*Thermoschutz*	Protector térmico
1FR054	Relè avviamento	*Relais démarrage*	Starting relay	*Anlaufrelais*	Relé arranque
1FR057	Elettrovalvola gas	*Electrovanne gaz*	Gas electric valve	*Gas Elektromagnetventil*	Electroválvula gaz
1ID035	Filtro meccanico	*Filtre mécanique*	Filtre	*Filter*	Filtro
1SC002	Boiler	*Boiler*	Heat exchanger	*Austauscher*	Intercambiador
1ZA020	Evaporatore	*Evaporateur*	Evaporator	*Verdampfer*	Evaporador

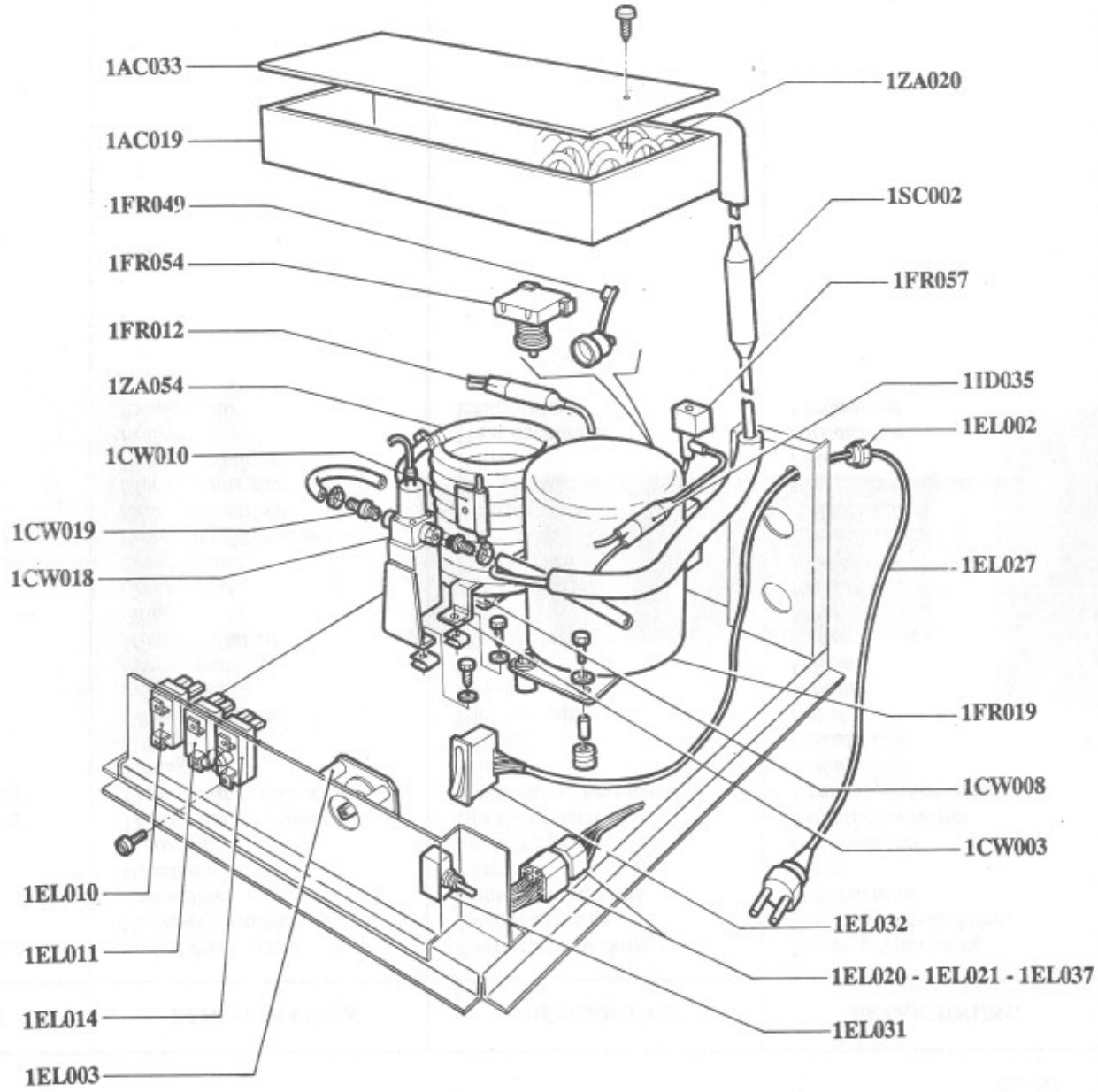
1AC033
1AC019
1FR049
1FR054
1FR012
1ZA054
1CW010
1CW019
1CW018
1EL010
1EL011
1EL014
1EL003
1ZA020
1SC002
1FR057
1ID035
1EL002
1EL027
1FR019
1CW008
1CW003
1EL032
1EL020 - 1EL021 - 1EL037
1EL031

SD30W

01 - 91

TAVOLA 5

COD.	DESCRIZIONE	DENOMINATION	DESCRIPTION	BEZEICHNUNG	DESCRIPCION
1AC019	Guarnizione evaporatore	*Joint d'évaporateur*	Evaporator packing	*Verdampferdichtung*	Bandeja evaporador
1AC033	Coprievaporatore	*Cache-évaporateur*	Evaporator top	*Verdampferabdeckung*	Tapa evaporador
1CW003	Squadretta fiss. condensatore	*Equerre fixation cond.*	Condenser support	*Kondensator Halterung*	Escuadra fij. cond.
1CW008	Squadretta per condensatore	*Equerre fixation cond.*	Condenser support	*Kondensator Halterung*	Escuadra fij. cond.
1CW010	Piastrina bulbo termostato	*Plaquette*	Condenser thermostat bracket	*Thermostatfühler Halterung*	Fij. bulbo termostato
1CW018	Valvola pressostatica	*Soupape pressostatique*	Water valve	*Wasserventil*	Valvula presostática
1CW019	Portagomma	*Support caoutchouc*	Rubber fixing	*Halterung*	Yunta de goma
1EL002	Fissacavo	*Serre-câble*	Cable terminal ring	*Kabelklemme*	Tuerca fij. cab.
1EL003	Timer	*Minuterie*	Timer	*Timer*	Temporizador
1EL010	Termostato contenitore	*Thermostat conteneur*	Bin thermostat	*Behälterthermostat*	Termostato depósito
1EL011	Termostato evaporatore	*Thermostat évaporateur*	Evaporator thermostat	*Verdampferthermostat*	Termostato evaporador
1EL014	Termostato condensazione	*Thermostat condensation*	Condenser thermostat	*Verflüssigerthermostat*	Termostato condensador
1EL020	Cablaggio	*Câblage*	Wiring	*Verkabelung*	Cableado
1EL021	Cablaggio	*Câblage*	Wiring	*Verkabelung*	Cableado
1EL027	Cavo alimentazione	*Câble d'alimentation*	Electric cable	*Kabel*	Cable alimentación
1EL031	Interruttore	*Interrupteur*	Switch	*Schalter*	Interruptor limpieza
1EL032	Interruttore luminoso	*Interrupteur lumineux*	Switch	*Schalter*	Interruptor ON/OFF
1EL037	Cablaggio	*Câblage*	Wiring	*Verkabelung*	Cableado
1FR012	Filtro	*Filtre*	Filter	*Filter*	Filtro
1FR019	Compressore	*Compresseur*	Compressor	*Kompressor*	Compresor
1FR049	Protettore termico	*Protection thermique*	Thermic protector	*Thermoschutz*	Protector térmico
1FR054	Relè avviamento	*Relais de démarrage*	Starting relay	*Anlaufrelais*	Relé arranque
1FR057	Elettrovalvola gas	*Electrovanne gaz*	Gas valve	*Gasventil*	Electroválvula gaz
1ID035	Filtro meccanico	*Filtre mécanique*	Filter	*Filter*	Filtro
1SC002	Boiler	*Boiler*	Heat exchanger	*Austauscher*	Intercambiador
1ZA020	Evaporatore	*Evaporateur*	Evaporator	*Verdampfer*	Evaporador
1ZA054	Condensatore	*Condenseur*	Water condenser	*Verflüssiger*	Condensador