DESPIECE TECNICO

# Sarten basculante eléctrica
# Electric tilting Bratt Pan
# Sauteuse basculante électriques
# Elektro-kippbratpfannen
# Brasiere electriche
# Fritadeira baculante Elétrica

## GAMA 900

## Modelos:

**SBE9-10**
**SBE9-10 I**
**SBE9-10 M**
**SBE9-10 I M**
**SBE9-15 I M**

***Marzo 2009 March***

***Revisado Marzo 2014 March Revised***

FAGOR

FAGOR INDUSTRIAL

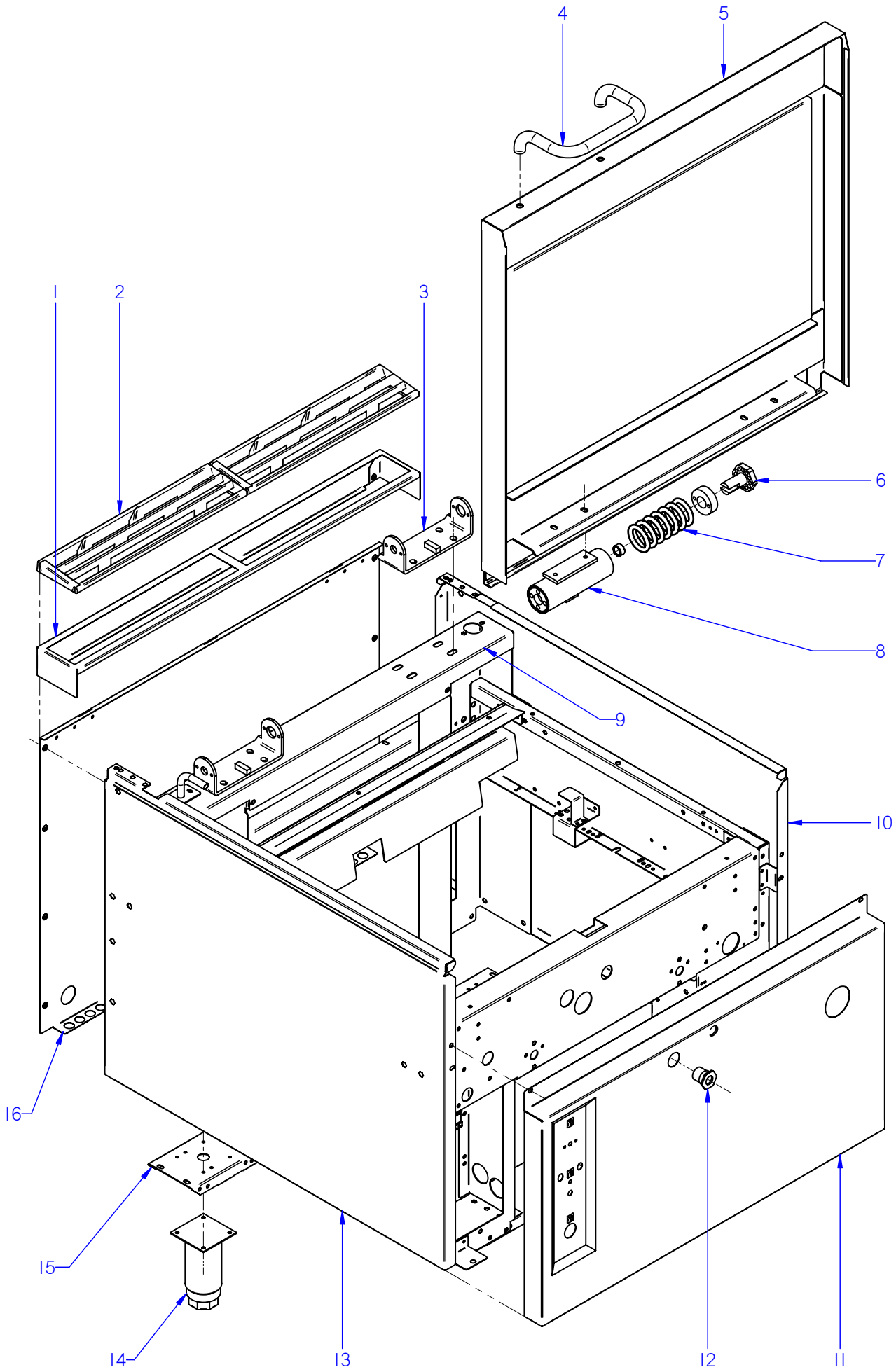


ITEM MARCADO EN COLOR = REPUESTO RECOMENDADO
COLOURED ITEM = RECOMMENDED SPARE PART

| N plano | Firma | Fecha | Aparato | MUEBLE | Lamina | |
|---|---|---|---|---|---|---|
| C-2180 | | 2009-03 | SARTEN BASCULANTE G-900 | | 1 | Fagor Industrial S.Coop. FAGOR Oñate |

| MOD. | SARTEN BASCULANTE | | ZONA | MUEBLE | | | | | | | PLANO | C-2180 |
|---|---|---|---|---|---|---|---|---|---|---|---|---|
| ITEM | CODIGO | DENOMINACION | TEXTO | SBE9-10<br>SBE9-10 M | SBE9-10 S<br>SBE9-10 MS | SBE9-15 M | SBE9-15 MS | | | | | NOTAS |
| 1 | R205439000 | SOPORTE EMBELLECEDOR 1M | TRIM SUPPORT 1M | 1 | 1 | _ | _ | | | | | |
| 1 | R205440000 | SOPORTE EMBELLECEDOR 1,5M | 1.5 M TRIM SUPPORT | _ | _ | 1 | 1 | | | | | |
| | Q419005000 | REMACHE 4x8 ALMG3 / ALUMINIO | RIVET 4X8 ALMG3 / ALUMINIUM | 2 | 2 | 2 | 2 | | | | | |
| 2 | R205425000 | EMBELLECEDOR ESMALTE | ENAMEL TRIM | 2 | 2 | 3 | 3 | | | | | |
| 3 | X286102000 | SOPORTE BISAGRA COMPLETA | COMPLETE HINGE SUPPORT | 2 | 2 | 2 | 2 | | | | | ELIMINA. 03.05.10 |
| 3 | X086106000 | SOPORTE BISAGRA COMPLETA | COMPLETE HINGE SUPPORT | 2 | 2 | 2 | 2 | | | | | INTROD. 03.05.10 |
| | Q012053000 | TORNILLO EXAGONAL M8x20 A304 | HEXAGONAL BOLT M8x20 A304 | 8 | 8 | 8 | 8 | | | | | |
| | Q262050000 | ARANDELA GROW. A8 A304 | WASHER GROW. A8 A304 | 8 | 8 | 8 | 8 | | | | | |
| | Q232050000 | ARANDELA A8 | WASHER A8 | 8 | 8 | 8 | 8 | | | | | |
| | Q162050000 | TUERCA EXAGONAL M8x1 INOX. | HEXAGONAL NUT M8x1 INOX. | 8 | 8 | 8 | 8 | | | | | |
| 4 | S036123000 | ASA DE TAPA | COVER HANDLE | 1 | 1 | 1 | 1 | | | | | |
| | X152809000 | TORNILLO SUJEC. ASA DE TAPA | LID HANDLE FASTENING BOLT | 2 | 2 | 2 | 2 | | | | | |
| | Q302027000 | ARANDELA 25x6x8,4x2 | WASHER 25X6X8.4X2 | 2 | 2 | 2 | 2 | | | | | |
| 5 | X022825000 | TAPA COMPLETA GAMA 900 1M | LID COMPLETE RANGE 900 1M | 1 | 1 | _ | _ | | | | | ELIMINA. 13.01.14 |
| 5 | 12098814 | TAPA COMPLETA GAMA 900 1M | LID COMPLETE RANGE 900 1M | 1 | 1 | _ | _ | | | | | INTROD. 13.01.14 |
| 5 | X082813000 | TAPA COMPLETA GAMA 900 1,5M | LID COMPLETE RANGE 900 1.5M | _ | _ | 1 | 1 | | | | | ELIMINA. 13.01.14 |
| 5 | 12098812 | TAPA COMPLETA GAMA 900 1,5M | LID COMPLETE RANGE 900 1.5M | _ | _ | 1 | 1 | | | | | INTROD. 13.01.14 |
| | Q012051000 | TORNILLO EXAGONAL M8x10 | HEXAGONAL BOLT M8x10 | 4 | 4 | 4 | 4 | | | | | |
| 6 | S116120000 | TENSOR MUELLE | TENSIONING SPRING | 2 | 2 | 2 | 2 | | | | | |
| | Q012042000 | TORNILLO EXAGONAL M6x15 | HEXAGONAL BOLT M6x15 | 4 | 4 | 4 | 4 | | | | | |
| | Q262040000 | ARANDELA GROW. A6 A304 | WASHER GROW. A6 A304 | 4 | 4 | 4 | 4 | | | | | |
| | S116118000 | CASQUILLO | BUSHING | 2 | 2 | 2 | 2 | | | | | |
| 7 | S116121000 | RESORTE TAPA 07199 | SPRING COVER 07199 | 2 | 2 | 2 | 2 | | | | | |
| 8 | X156101000 | BISAGRA COMPLETA | COMPLETE HINGE | 2 | 2 | 2 | 2 | | | | | |
| | S116126000 | COJINETE CILINDRICO | CYLINDRICAL BEARING | 2 | 2 | 2 | 2 | | | | | |
| | S116119000 | GIRO DE ASA | HANDLE ROTATION | 2 | 2 | 2 | 2 | | | | | |
| | Q012041000 | TORNILLO EXAGONAL M6x10 A304 | HEXAGONAL BOLT M6x10 A304 | 4 | 4 | 4 | 4 | | | | | |
| 9 | X020108000 | CUBIERTA PUENTE | BRIDGE COVERING | 1 | 1 | _ | _ | | | | | |
| 9 | X080103000 | CUBIERTA PUENTE G.900 1.5M | BRIDGE COVERING G.900 1.5M | _ | _ | 1 | 1 | | | | | |
| | Q411302000 | REMACHE MONOBOLT Ø6.35 | MONOBOLT RIVET D6.35 | 6 | 6 | 6 | 6 | | | | | |
| | Q221342000 | REMACHE EXAGONAL M5 | HEXAGONAL RIVET M5 | 2 | 2 | 2 | 2 | | | | | |

| MOD. | SARTEN BASCULANTE | ZONA | MUEBLE | PLANO | C-2180 |
|---|---|---|---|---|---|

| ITEM | CODIGO | DENOMINACION | TEXTO | SBE9-10 SBE9-10 M | SBE9-10 S SBE9-10 MS | SBE9-15 M | SBE9-15 MS | | | | | NOTAS |
|---|---|---|---|---|---|---|---|---|---|---|---|---|
| 10 | X042804000 | PANEL LATERAL DERECHO | RIGHT SIDE PANEL | 1 | _ | 1 | _ | | | | | |
| 10 | X022818000 | PANEL LATERAL DERECHO SUSP. | SUSP. RIGHT SIDE PANEL | _ | 1 | _ | 1 | | | | | |
| | Q221343000 | REMACHE EXAGONAL M6 | HEXAGONAL RIVET M6 | 11 | _ | 11 | _ | | | | | |
| | Q012042000 | TORNILLO EXAGONAL M6x15 | HEXAGONAL BOLT M6x15 | 4 | _ | 4 | _ | | | | | |
| | Q262040000 | ARANDELA GROW. A6 A304 | WASHER GROW. A6 A304 | 4 | _ | 4 | _ | | | | | |
| | Q221342000 | REMACHE EXAGONAL M5 | HEXAGONAL RIVET M5 | 3 | 3 | 3 | 3 | | | | | |
| | Q152004000 | TORNILLO APLASTADO M5x13 | FLAT HEAD SCREW M5X13 | 1 | 1 | 1 | 1 | | | | | |
| | Q162030000 | TUERCA EXAGONAL M5 | HEXAGONAL NUT M5 | _ | 1 | _ | 1 | | | | | |
| 11 | X022829000 | PANEL FRONTAL SBG9-10 | FRONT PANEL SBG9-10 | _ | _ | _ | _ | | | | | |
| 11 | X022830000 | PANEL FRONTAL SBG9-10 M | FRONT PANEL SBG9-10 M | _ | _ | _ | _ | | | | | MOTORIZADA |
| 11 | X042810000 | PANEL FRONTAL SBE9-10 | FRONT PANEL SBE9-10 | 1 | 1 | _ | _ | | | | | |
| 11 | X042809000 | PANEL FRONTAL SBE9-10 M | FRONT PANEL SBE9-10 M | 1 | 1 | _ | _ | | | | | MOTORIZADA |
| 11 | X082814000 | PANEL FRONTAL SBG9-15 | FRONT PANEL SBG9-15 | _ | _ | _ | _ | | | | | |
| 11 | X082815000 | PANEL FRONTAL SBE9-15 | FRONT PANEL SBE9-15 | _ | _ | 1 | 1 | | | | | |
| | Q152004000 | TORNILLO APLASTADO M5X13 | FLAT HEAD SCREW M5X13 | 2 | 2 | 2 | 2 | | | | | |
| | Q012042000 | TORNILLO EXAGONAL M6x15 | HEXAGONAL BOLT M6x15 | 2 | 2 | 2 | 2 | | | | | |
| | Q262040000 | ARANDELA GROW. A6 A304 | WASHER GROW. A6 A304 | 2 | 2 | 2 | 2 | | | | | |
| 12 | S112804000 | EMBELLECEDOR TUBO | PIPE TRIM | _ | _ | _ | _ | | | | | |
| 13 | X042803000 | PANEL LATERAL IZQUIERDO | LEFT SIDE PANEL | 1 | _ | 1 | _ | | | | | |
| 13 | X022817000 | PANEL LATERAL IZQUIERDO SUSP. | SUSP. LEFT SIDE PANEL | _ | 1 | _ | 1 | | | | | |
| | Q221343000 | REMACHE EXAGONAL M6 | HEXAGONAL RIVET M6 | 11 | _ | 11 | _ | | | | | |
| | Q012042000 | TORNILLO EXAGONAL M6x15 | HEXAGONAL BOLT M6x15 | 4 | _ | 4 | _ | | | | | |
| | Q262040000 | ARANDELA GROW. A6 A304 | WASHER GROW. A6 A304 | 4 | _ | 4 | _ | | | | | |
| | Q221342000 | REMACHE EXAGONAL M5 | HEXAGONAL RIVET M5 | 3 | 3 | 3 | 3 | | | | | |
| | Q152004000 | TORNILLO APLASTADO M5x13 | FLAT HEAD SCREW M5X13 | 1 | 1 | 1 | 1 | | | | | |
| | Q162030000 | TUERCA EXAGONAL M5 | HEXAGONAL NUT M5 | _ | 1 | _ | 1 | | | | | |
| 14 | X260151000 | PATA REGULABLE | ADJUSTABLE LEG | 4 | _ | 4 | _ | | | | | |
| | Q411304000 | REMACHE AVIBULB Ø 4,8 | AVIBULB RIVET Ø 4.8 | 16 | _ | 16 | _ | | | | | |
| | | | | | | | | | | | | |
| | | | | | | | | | | | | |
| | | | | | | | | | | | | |

| MOD. | SARTEN BASCULANTE | | ZONA | MUEBLE | | | | | | | PLANO | C-2180 |
|---|---|---|---|---|---|---|---|---|---|---|---|---|
| ITEM | CODIGO | DENOMINACION | TEXTO | SBE9-10<br>SBE9-10 M | SBE9-10 S<br>SBE9-10 MS | SBE9-15 M | SBE9-15 MS | | | | | NOTAS |
| 15 | X022603000 | LISTON SOPORTE PATAS 1M | LEG SUPPORT STRIP 1M | 2 | 1 | _ | _ | | | | | |
| 15 | X082608000 | LISTON SOPORTE PATAS 1,5M | LEG SUPPORT STRIP 1.5 M | _ | _ | 2 | 1 | | | | | |
| | Q221342000 | REMACHE EXAGONAL M5 | HEXAGONAL RIVET M5 | 4 | 2 | 4 | 4 | | | | | |
| | Q221343000 | REMACHE EXAGONAL M6 | HEXAGONAL RIVET M6 | 2 | 2 | 2 | 2 | | | | | |
| 16 | U562853000 | PANEL POSTERIOR 1M | REAR PANEL 1M | 1 | _ | _ | _ | | | | | |
| 16 | S372816000 | PANEL POSTERIOR 1M SUSPEND. | REAR PANEL 1M SUSPENDED | _ | 1 | _ | _ | | | | | |
| 16 | U582852000 | PANEL POSTERIOR 1,5M | REAR PANEL 1.5 M | _ | _ | 1 | _ | | | | | |
| 16 | X412802000 | PANEL POSTERIOR 1,5M SUSPEN. | REAR PANEL 1.5 M SUSPENDED | _ | _ | _ | 1 | | | | | |
| | Q419005000 | REMACHE 4x8 ALMG3 / ALUMINIO | RIVET 4X8 ALMG3 / ALUMINIUM | 8 | 8 | 8 | 8 | | | | | |

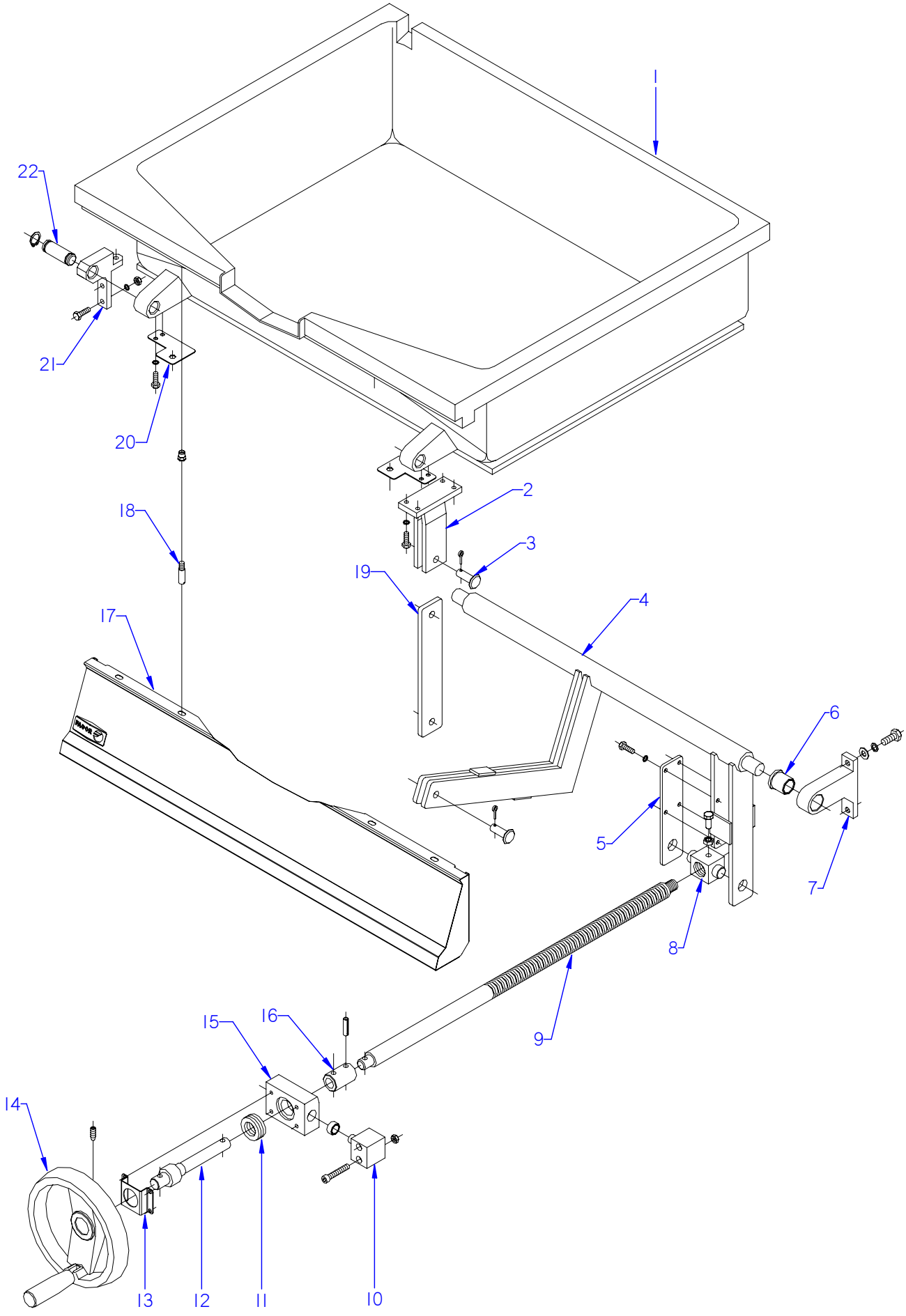


ITEM MARCADO EN COLOR = REPUESTO RECOMENDADO
COLOURED ITEM = RECOMMENDED SPARE PART

| N plano | Firma | Fecha | Aparato | | Lamina | |
|---|---|---|---|---|---|---|
| C-2181 | | 2009-03 | CUBA (ELEVACION MANUAL) SARTEN BASCULANTE G 900 | | 2 | Fagor Industrial S.Coop. FAGOR Onate |

| MOD. | SARTEN BASCULANTE | ZONA | CUBA (ELEVACION MANUAL) | PLANO | C-2181 |
|---|---|---|---|---|---|

| ITEM | CODIGO | DENOMINACION | TEXTO | SBE9-10 | SBE9-10 I | | | | | | NOTAS |
|---|---|---|---|---|---|---|---|---|---|---|---|
| 1 | X156155000 | CUBA FUNDIDA SBG9-10 | CAST IRON TUB SBG9-10 | 1 | _ | | | | | | ELIMINADO 12.07.10 |
| 1 | X146125000 | CUBA FUNDIDA SBG9-10 | CAST IRON TUB SBG9-10 | 1 | _ | | | | | | ELIMINADO 21.02.2014 |
| 1 | 12007698 | CUBA FUNDIDA SBG9-10 | CAST IRON TUB SBG9-10 | 1 | _ | | | | | | INTRODUCIDO 21.02.2014 |
| 1 | 12009588 | CUBA INOXIDABLE SARTEN 910 | INOX TUB FRYPAN 910 | _ | 1 | | | | | | |
| 2 | X156157000 | HORQUILLA DE GIRO | ROTATION FORK | 1 | _ | | | | | | |
| | Q012043000 | TORNILLO EXAGONAL M6x20 A304 | HEXAGONAL BOLT M6x20 A304 | 4 | _ | | | | | | |
| | Q262040000 | ARANDELA GROW. A6 A304 | WASHER GROW. A6 A304 | 4 | _ | | | | | | |
| 3 | X156123000 | BULON Ø12 | PIN Ø12 | 2 | 2 | | | | | | |
| | Q352024000 | PASADOR DE ALETAS Ø4x25 | COTTER PIN Ø4x25 | 2 | 2 | | | | | | |
| 4 | X156148000 | BRAZO ELEVADOR COMPLETO | COMPLETE ELEVATION ARM | 1 | 1 | | | | | | |
| | Q131555000 | VARILLA ROSCADA M8x30 | THREADED ROD M8X30 | 14 | 14 | | | | | | |
| | Q131558000 | VARILLA ROSCADA M8x60 | THREADED ROD M8X60 | 4 | 4 | | | | | | |
| | Q162050000 | TUERCA EXAGONAL M8x1 | HEXAGONAL NUT M8x1 | 4 | 4 | | | | | | |
| 5 | X156149000 | BRAZO LATERAL | SIDE ARM | 1 | 1 | | | | | | |
| | Q012042000 | TORNILLO EXAGONAL M6x15 | HEXAGONAL BOLT M6x15 | 4 | 4 | | | | | | |
| | Q262040000 | ARANDELA GROW. A6 A304 | WASHER GROW. A6 A304 | 4 | 4 | | | | | | |
| 6 | X109550000 | COJINETE SELFOIL B11 | BEARING SELFOIL B11 | 2 | 2 | | | | | | |
| 7 | X150108000 | SOPORTE DE GIRO | ROTATION SUPPORT | 2 | 2 | | | | | | |
| | Q012063000 | TORNILLO EXAG. M10x20 A304 | HEX BOLT M10x20 A304 | 4 | 4 | | | | | | |
| | Q261060000 | ARANDELA MUELLE A10 | SPRING WASHER A10 | 4 | 4 | | | | | | |
| | Q232060000 | ARANDELA A10 | WASHER A10 | 4 | 4 | | | | | | |
| 8 | X156154000 | TUERCA HUSILLO | SPINDLE NUT | 1 | 1 | | | | | | ELIMINADO 01.09.10 |
| 8 | X146136000 | TUERCA HUSILLO | SPINDLE NUT | 1 | 1 | | | | | | ELIMINADO 01.03.13 |
| 8 | 12046610 | TUERCA HUSILLO | SPINDLE NUT | 1 | 1 | | | | | | INTRODUCIDO 01.03.13 |
| | Q011364000 | TORNILLO EXAG. M10x25 | HEX BOLT M10x25 | 1 | 1 | | | | | | |
| | Q161360000 | TUERCA EXAG. M10 H. ZINCADA | HEXAG. SCREW M10 H. ZINC-CO | 1 | 1 | | | | | | |
| 9 | X156152000 | HUSILLO GAMA 900 | SPINDLE RANGE 900 | 1 | 1 | | | | | | ELIMINADO 01.09.10 |
| 9 | X146134000 | HUSILLO GAMA 900 | SPINDLE RANGE 900 | 1 | 1 | | | | | | ELIMINADO 01.03.13 |
| 9 | 12046627 | HUSILLO GAMA 900 | SPINDLE RANGE 900 | 1 | 1 | | | | | | INTRODUCIDO 01.03.13 |
| | | | | | | | | | | | |
| | | | | | | | | | | | |

| MOD. | SARTEN BASCULANTE | ZONA | CUBA (ELEVACION MANUAL) | PLANO | C-2181 |
|---|---|---|---|---|---|

| ITEM | CODIGO | DENOMINACION | TEXTO | SBE9-10 | SBE9-10 I | | | | | | NOTAS |
|---|---|---|---|---|---|---|---|---|---|---|---|
| 10 | X156113000 | PIVOTE DE GIRO | ROTATION PIVOT | 2 | 2 | | | | | | |
| | S116126000 | COJINETE CILINDRICO | CYLINDRICAL BEARING | 2 | 2 | | | | | | |
| | Q052046000 | TORNILLO ALLEN M6x40 A304 | ALLEN BOLT M6x40 A304 | 4 | 4 | | | | | | |
| | Q162040000 | TUERCA EXAGONAL M6 | HEXAGONAL NUT M6 | 4 | 4 | | | | | | |
| 11 | X156125000 | RODAMIENTO 51204 | BEARING 51204 | 1 | 1 | | | | | | |
| 12 | X156161000 | EJE VOLANTE COMPLETO | COMPLETE FLYSHAFT | 1 | 1 | | | | | | |
| 13 | X152619000 | SOPORTE EJE VOLANTE | FLYSHAFT SUPPORT | 1 | 1 | | | | | | |
| | Q012041000 | TORNILLO EXAGONAL M6x10 A304 | HEXAGONAL BOLT M6x10 A304 | 4 | 4 | | | | | | |
| | Q262040000 | ARANDELA GROW. A6 A304 | WASHER GROW. A6 A304 | 4 | 4 | | | | | | |
| 14 | X156139000 | VOLANTE ELESA | FLYSHAFT ELESA | 1 | 1 | | | | | | |
| | Q131552000 | VARILLA ROSCADA M8x15 | THREADED ROD M8X15 | 2 | 2 | | | | | | |
| 15 | X156114000 | SOPORTE RODAMIENTO | BEARING SUPPORT | 1 | 1 | | | | | | |
| 16 | X156115000 | CASQUILLO | BUSHING | 1 | 1 | | | | | | |
| | Q371027000 | MANGUITO DE SUJECCION Ø8x30 | FASTENING SLEEVE Ø8x30 | 2 | 2 | | | | | | |
| 17 | X022822000 | PORTAMANDOS SARTEN FUN. 1M | C.IRON FRYPAN CONTROL HOLD | 1 | _ | | | | | | |
| 17 | X022824000 | PORTAMANDOS SARTEN INOX. 1M | INOX FRYPAN CONTROL HOLDEI | _ | 1 | | | | | | |
| | U022836000 | ESCUDO FAGOR | FAGOR EMBLEM | 1 | 1 | | | | | | |
| | Q012042000 | TORNILLO EXAGONAL M6x15 | HEXAGONAL BOLT M6x15 | 2 | 2 | | | | | | |
| | Q301304000 | ARANDELA PLANA 23x6,5x2 | FLAT WASHER 23X6.5X2 | 2 | 2 | | | | | | |
| | Q221023000 | CLIP SUJECIÓN RÁPIDA D-5 | QUICK FASTENING CLIP D-5 | 2 | 2 | | | | | | |
| 18 | Q151336000 | TORNILLO SOPORTE GUIAS | GUIDE SUPPORT BOLT | 2 | 2 | | | | | | |
| 19 | X156151000 | BRAZO | ARM | 1 | 1 | | | | | | |
| 20 | X156156000 | AMARRE PANEL PORTAMANDOS | CONTROL HOLDER PANEL FAST. | 2 | _ | | | | | | |
| | Q012041000 | TORNILLO EXAGONAL M6x10 A304 | HEXAGONAL BOLT M6x10 A304 | 4 | _ | | | | | | |
| | Q262040000 | ARANDELA GROW. A6 A304 | WASHER GROW. A6 A304 | 4 | _ | | | | | | |
| 21 | X156145000 | SOPORTE GIRO CUBA | TUB ROTATION SUPPORT | 2 | 2 | | | | | | |
| | Q012043000 | TORNILLO EXAGONAL M6x20 A304 | HEXAGONAL BOLT M6x20 A304 | 6 | 6 | | | | | | |
| | Q262040000 | ARANDELA GROW. A6 A304 | WASHER GROW. A6 A304 | 6 | 6 | | | | | | |
| | Q162040000 | TUERCA EXAGONAL M6 | HEXAGONAL NUT M6 | 6 | 6 | | | | | | |
| 22 | X109511000 | BULON LATON | BRASS BOLT | 2 | 2 | | | | | | |
| | Q301020000 | ANILLO DE SEGURIDAD 20x1,2 | CIRCLIP 20x1.2 | 4 | 4 | | | | | | |

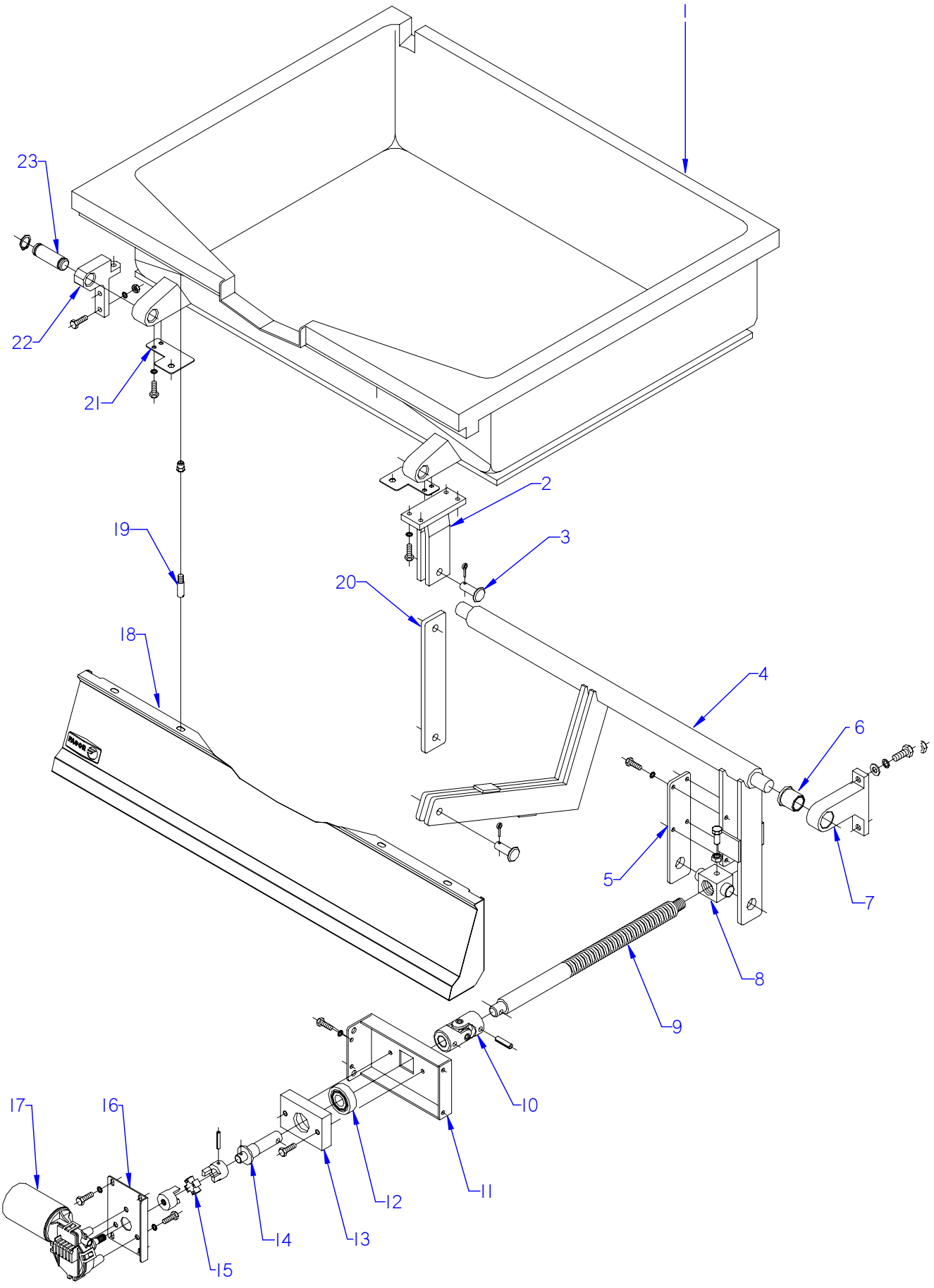


ITEM MARCADO EN COLOR = REPUESTO RECOMENDADO
COLOURED ITEM = RECOMMENDED SPARE PART

| N plano | Firma | Fecha | Aparato | | Lamina | |
|---|---|---|---|---|---|---|
| C-2182 | | 2009-03 | CUBA (ELEVACION MOTOR) SARTEN BASCULANTE G 900 | | 3 | Fagor Industrial S.Coop. FAGOR Oñate |

| MOD. | SARTEN BASCULANTE | ZONA | CUBA (ELEVACION MOTOR) | PLANO | C-2182 |
|---|---|---|---|---|---|

| ITEM | CODIGO | DENOMINACION | TEXTO | SBE9-10 M | SBE9-10 IM | SBE9-15 IM | | | | | NOTAS |
|---|---|---|---|---|---|---|---|---|---|---|---|
| 1 | X156155000 | CUBA FUNDIDA SBG9-10 | CAST IRON TUB SBG9-10 | _ | _ | _ | | | | | ELIMINADO 12.07.10 |
| 1 | X146125000 | CUBA FUNDIDA SBG9-10 | CAST IRON TUB SBG9-10 | _ | _ | _ | | | | | INTRODUCIDO 12.07.10 |
| 1 | X146133000 | CUBA INOXIDABLE SBG9-10 | INOX TUB SBG9-10 | _ | _ | _ | | | | | |
| 1 | X146125000 | CUBA FUNDIDA SBE9-10 | CAST IRON TUB SBE9-10 | 1 | _ | _ | | | | | |
| 1 | X146133000 | CUBA INOXIDABLE SBE9-10 | INOX TUB SBE9-10 | _ | 1 | _ | | | | | |
| 1 | X286111000 | CUBA INOXIDABLE SBG9-15 | INOX TUB SBG9-15 | _ | _ | _ | | | | | |
| 1 | X426106000 | CUBA INOXIDABLE SBE9-15 | INOX TUB SBE9-15 | _ | _ | 1 | | | | | |
| | Q221343000 | REMACHE EXAGONAL M6 | HEXAGONAL RIVET M6 | 2 | 2 | 2 | | | | | |
| | Q221343000 | REMACHE EXAGONAL M6 | HEXAGONAL RIVET M6 | 2 | 2 | 2 | | | | | |
| 2 | X156157000 | HORQUILLA DE GIRO | ROTATION FORK | 1 | _ | _ | | | | | |
| | Q012043000 | TORNILLO EXAGONAL M6x20 A304 | HEXAGONAL BOLT M6x20 A304 | 4 | _ | _ | | | | | |
| | Q262040000 | ARANDELA GROW. A6 A304 | WASHER GROW. A6 A304 | 4 | _ | _ | | | | | |
| 3 | X156123000 | BULON Ø12 | PIN Ø12 | 2 | 2 | 2 | | | | | |
| | Q352024000 | PASADOR DE ALETAS Ø4x25 | COTTER PIN Ø4x25 | 2 | 2 | 2 | | | | | |
| 4 | X156148000 | BRAZO ELEVADOR COMP.SB9-10 | COMP. ELEVATION ARM SB9-10 | 1 | 1 | _ | | | | | |
| 4 | X286106000 | BRAZO ELEVADOR COMP.SBG9-15 | COMP. ELEVATION ARM SBG9-15 | _ | _ | _ | | | | | |
| 4 | X426103000 | BRAZO ELEVADOR COMP.SBE9-15 | COMP. ELEVATION ARM SBE9-15 | _ | _ | 1 | | | | | |
| 5 | X156149000 | BRAZO LATERAL | SIDE ARM | 1 | 1 | 1 | | | | | |
| | Q012042000 | TORNILLO EXAGONAL M6x15 | HEXAGONAL BOLT M6x15 | 4 | 4 | 4 | | | | | |
| | Q262040000 | ARANDELA GROW. A6 A304 | WASHER GROW. A6 A304 | 4 | 4 | 4 | | | | | |
| 6 | X109550000 | COJINETE SELFOIL B11 | BEARING SELFOIL B11 | 2 | 2 | 2 | | | | | |
| 7 | X150108000 | SOPORTE DE GIRO | ROTATION SUPPORT | 2 | 2 | 2 | | | | | |
| | Q012063000 | TORNILLO EXAG. M10x20 A304 | HEX BOLT M10x20 A304 | 4 | 4 | 4 | | | | | |
| | Q261060000 | ARANDELA MUELLE A10 | SPRING WASHER A10 | 4 | 4 | 4 | | | | | |
| | Q232060000 | ARANDELA A10 | WASHER A10 | 4 | 4 | 4 | | | | | |
| 8 | X156154000 | TUERCA HUSILLO | SPINDLE NUT | 1 | 1 | 1 | | | | | ELIMINADO 01.09.10 |
| 8 | X146136000 | TUERCA HUSILLO | SPINDLE NUT | 1 | 1 | 1 | | | | | ELIMINADO 01.03.13 |
| 8 | 12046610 | TUERCA HUSILLO | SPINDLE NUT | 1 | 1 | 1 | | | | | INTRODUCIDO 01.03.13 |
| | Q011364000 | TORNILLO EXAG. M10x25 | HEX BOLT M10x25 | 1 | 1 | 1 | | | | | |
| | Q161360000 | TUERCA EXAG. M10 H. ZINCADA | HEXAG. SCREW M10 H. ZINC-CO | 1 | 1 | 1 | | | | | |

| MOD. | SARTEN BASCULANTE | | ZONA | CUBA (ELEVACION MOTOR) | | | | | PLANO | C-2182 | |
|---|---|---|---|---|---|---|---|---|---|---|---|
| ITEM | CODIGO | DENOMINACION | TEXTO | SBE9-10 M | SBE9-10 IM | SBE9-15 IM | | | | | NOTAS |
| 9 | X156152000 | HUSILLO GAMA 900 | SPINDLE RANGE 900 | 1 | 1 | 1 | | | | | ELIMINADO 01.09.10 |
| 9 | X146134000 | HUSILLO GAMA 900 | SPINDLE RANGE 900 | 1 | 1 | 1 | | | | | ELIMINADO 01.03.13 |
| 9 | 12046627 | HUSILLO GAMA 900 | SPINDLE RANGE 900 | 1 | 1 | 1 | | | | | INTRODUCIDO 01.03.13 |
| 10 | X126114000 | JUNTA UNIVERSAL 107A | UNIVERSAL JOINT 107A | 1 | 1 | 1 | | | | | |
| | Q371027000 | MANGUITO DE SUJECCION Ø8x30 | FASTENING SLEEVE Ø8x30 | 2 | 2 | 2 | | | | | |
| 11 | X342607000 | SOPORTE EJE MOTOR | MOTOR SHAFT SUPPORT | 1 | 1 | 1 | | | | | |
| | Q012032000 | TORNILLO EXAGONAL M5x15 A304 | HEXAGONAL BOLT M5x15 A304 | 4 | 4 | 4 | | | | | |
| | Q262030000 | ARANDELA GROW. A5 A304 | WASHER GROW. A5 A304 | 4 | 4 | 4 | | | | | |
| 12 | X346109000 | RODAMIENTO SKF | SKF BEARING | 1 | 1 | 1 | | | | | |
| 13 | X346105000 | SOPORTE RODAMIENTO | BEARING SUPPORT | 1 | 1 | 1 | | | | | |
| | Q012044000 | TORNILLO EXAGONAL M6x25 | HEXAGONAL BOLT M6x25 | 2 | 2 | 2 | | | | | |
| 14 | X346106000 | EJE MOTOR | MOTOR SHAFT | 1 | 1 | 1 | | | | | |
| 15 | X346107000 | ACOPLAMIE. ELASTICO LOVEJOY | ELASTIC LOVEJOY COUPLING | 1 | 1 | 1 | | | | | |
| | Q371032000 | PASADOR ELASTICO Ø5x30 | ELASTIC PIN Ø5x30 | 2 | 2 | 2 | | | | | |
| 16 | X342603000 | SOPORTE MOTOR | MOTOR SUPPORT | 1 | 1 | 1 | | | | | |
| | Q012042000 | TORNILLO EXAGONAL M6x15 | HEXAGONAL BOLT M6x15 | 4 | 4 | 4 | | | | | |
| | Q262040000 | ARANDELA GROW. A6 A304 | WASHER GROW. A6 A304 | 4 | 4 | 4 | | | | | |
| 17 | X343020000 | MOTORREDUCTOR (BOSCH) | GEAR MOTOR (BOSCH) | 1 | 1 | 1 | | | | | |
| | Q012042000 | TORNILLO EXAGONAL M6x15 | HEXAGONAL BOLT M6x15 | 3 | 3 | 3 | | | | | |
| | Q262040000 | ARANDELA GROW. A6 A304 | WASHER GROW. A6 A304 | 3 | 3 | 3 | | | | | |
| 18 | X022822000 | PORTAMANDOS COMPL. SB9-10 | COMPL. CONTROL HOLDER SB9 | 1 | _ | _ | | | | | |
| 18 | X022824000 | PORTAMANDOS COMPL. SB9-10 I | COMPL. CONTROL HOLDER SB9 | _ | 1 | _ | | | | | |
| 18 | X082812000 | PORTAMANDOS COMPL. SB9-15 I | COMPL. CONTROL HOLDER SB9 | _ | _ | 1 | | | | | |
| | U022836000 | ESCUDO FAGOR | FAGOR EMBLEM | 1 | 1 | 1 | | | | | |
| | Q301304000 | ARANDELA PLANA 23x6,5x2 | FLAT WASHER 23X6.5X2 | 2 | 2 | 2 | | | | | |
| | Q012042000 | TORNILLO EXAGONAL M6x15 | HEXAGONAL BOLT M6x15 | 2 | 2 | 2 | | | | | |
| | Q221023000 | CLIP SUJECIÓN RÁPIDA D-5 | QUICK FASTENING CLIP D-5 | 2 | 2 | 2 | | | | | |
| 19 | Q151336000 | TORNILLO SOPORTE GUIAS | GUIDE SUPPORT BOLT | 2 | 2 | 2 | | | | | |
| 20 | X156151000 | BRAZO | ARM | 1 | 1 | 1 | | | | | |
| | | | | | | | | | | | |
| | | | | | | | | | | | |

| MOD. | SARTEN BASCULANTE | ZONA | CUBA (ELEVACION MOTOR) | PLANO | C-2182 |
|---|---|---|---|---|---|

| ITEM | CODIGO | DENOMINACION | TEXTO | SBE9-10 M | SBE9-10 IM | SBE9-15 IM | | | | | NOTAS |
|---|---|---|---|---|---|---|---|---|---|---|---|
| 21 | X156156000 | AMARRE PANEL PORTAMANDOS | CONTROL HOLDER PANEL FAST | 2 | _ | _ | | | | | |
| | Q012041000 | TORNILLO EXAGONAL M6x10 A304 | HEXAGONAL BOLT M6x10 A304 | 4 | _ | _ | | | | | |
| | Q262040000 | ARANDELA GROW. A6 A304 | WASHER GROW. A6 A304 | 4 | _ | _ | | | | | |
| 22 | X156145000 | SOPORTE GIRO CUBA | TUB ROTATION SUPPORT | 2 | 2 | 2 | | | | | |
| | Q012043000 | TORNILLO EXAGONAL M6x20 A304 | HEXAGONAL BOLT M6x20 A304 | 6 | 6 | 6 | | | | | |
| | Q262040000 | ARANDELA GROW. A6 A304 | WASHER GROW. A6 A304 | 6 | 6 | 6 | | | | | |
| | Q162040000 | TUERCA EXAGONAL M6 | HEXAGONAL NUT M6 | 6 | 6 | 6 | | | | | |
| 23 | X109511000 | BULON LATON | BRASS BOLT | 2 | 2 | 2 | | | | | |
| | Q301020000 | ANILLO DE SEGURIDAD 20x1,2 | CIRCLIP 20x1.2 | 4 | 4 | 4 | | | | | |
| | Q012032000 | TORNILLO EXAGONAL M5x15 | HEXAGONAL BOLT M5x15 | 1 | 1 | 1 | | | | | |
| | Q012033000 | TORNILLO EXAGONAL M5x20 | HEXAGONAL BOLT M5x20 | 1 | 1 | 1 | | | | | |

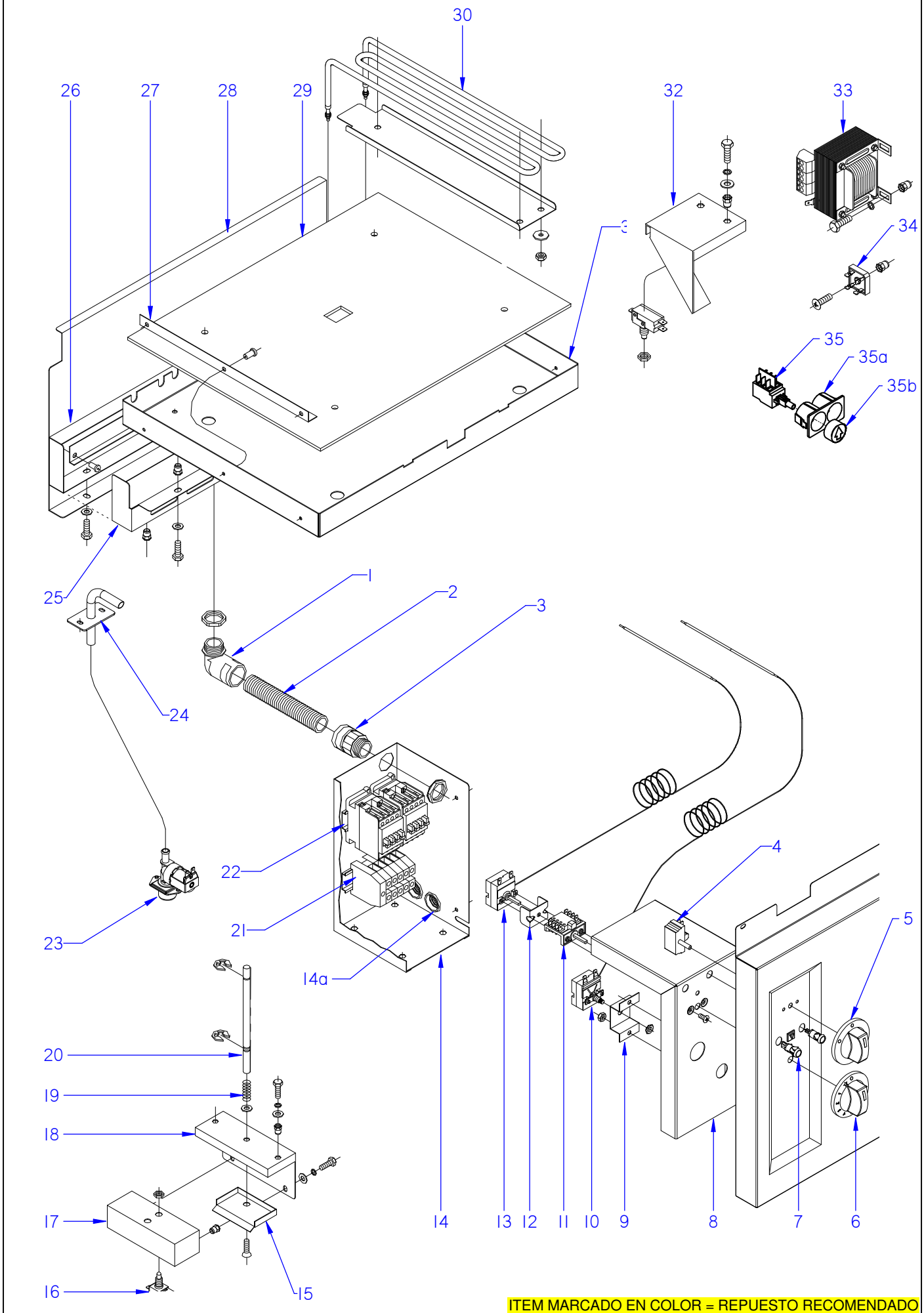


ITEM MARCADO EN COLOR = REPUESTO RECOMENDADO
COLOURED ITEM = RECOMMENDED SPARE PART

| N plano | Firma | Fecha | Aparato | Lamina | |
|---|---|---|---|---|---|
| C-2185 | | 2009-03 | CONJUNTO FUNCIONAL ELECTRICO<br>SARTEN BASCULANTE SBE | 6 | Fagor Industrial S.Coop. FAGOR<br>Onate |

| MOD. | SARTEN BASCULANTE | | ZONA | CONJUNTO FUNCIONAL ELECTRICO | | | | | | PLANO | C-2185 |
|---|---|---|---|---|---|---|---|---|---|---|---|
| ITEM | CODIGO | DENOMINACION | TEXTO | SBE9-10 | SBE9-10 M | SBE9-10 IM | SBE9-15 IM | | | | NOTAS |
| 1 | Z703006000 | RACORD A 90 SFWO-P213T | CONNECTION A 90 SFWO-P213T | 1 | 1 | 1 | 1 | | | | |
| | 12010063 | CONTRATUERCA GAES | COUNTERNUT GAES | 1 | 1 | 1 | 1 | | | | |
| 2 | 3712300000 | TUBO PG21 0233.204.023 | PIPE PG21 0233.204.023 | 1 | 1 | 1 | 1 | | | | |
| 3 | X713021000 | RACORD ICK 5020 | CONNECTION ICK 5020 | 1 | 1 | 1 | 1 | | | | |
| | 12010063 | CONTRATUERCA GAES | COUNTERNUT GAES | 1 | 1 | 1 | 1 | | | | |
| 4 | T343008000 | CONMUTADOR HGC | HGC SWITCH | 1 | 1 | 1 | 1 | | | | |
| | Q151320000 | TORN. ALOMADO M4X6 H.ZINCADO | HEXAGONAL CURVED HEAD M4X | 2 | 2 | 2 | 2 | | | | |
| 5 | X022133000 | BOTON DE MANDO Ø6 (EN. AGUA) | CONTROL BUTTON Ø6 (WATER I | 1 | 1 | 1 | 1 | | | | |
| 6 | U173005000 | BOTON DE MANDO Ø6 | CONTROL BUTTON Ø6 | 1 | 1 | 1 | 1 | | | | |
| 7 | X143017000 | PILOTO VERDE SARTEN | GREEN FRYPAN PILOT | 1 | 1 | 1 | 1 | | | | ELIMINADO 01.02.13 |
| 7 | 12047390 | PILOTO VERDE 230V AC 8KW 16MM | GREEN PILOT 230V AC 8KW 16M | 1 | 1 | 1 | 1 | | | | INTRODUCIDO 01.02.13 |
| | X143018000 | PILOTO AMBAR SARTEN | FRYING PAM AMBER PILOT | 1 | 1 | 1 | 1 | | | | ELIMINADO 01.02.13 |
| | 12024669 | PILOTO AMBAR Ø18 | AMBER PILOT Ø18 | 1 | 1 | 1 | 1 | | | | INTRODUCIDO 01.02.13 |
| 8 | X152667000 | TAPA CAJA SOPORTE VALVULA | VALVE SUPPORT BOX COVER | 1 | 1 | 1 | 1 | | | | |
| 9 | X152661000 | SOPORTE LIMITADOR | LIMITER SUPPORT | 1 | 1 | 1 | 1 | | | | |
| | Q162030000 | TUERCA EXAGONAL M5 | HEXAGONAL NUT M5 | 2 | 2 | 2 | 2 | | | | |
| 10 | R612103000 | TERMOSTATO LIMITADOR | THERMOSTAT LIMITER | 1 | 1 | 1 | 1 | | | | |
| | Q013023000 | TORNILL. EXAGONAL M4x20 LATON | HEXAGONAL BOLT M4X20 BRASS | 1 | 1 | 1 | 1 | | | | |
| | Q163020000 | TUERCA EXAGONAL M4 LATON | HEXAGONAL NUT M4 BRASS | 1 | 1 | 1 | 1 | | | | |
| | Q183001000 | TUERCA CUADRADA M4 | SQUARE NUT M4 | 1 | 1 | 1 | 1 | | | | |
| | Q563004000 | LENGÜETA COMPONENT. DOBLE | DOUBLE COMPONENT TONGUE | 1 | 1 | 1 | 1 | | | | |
| | Z603022000 | PLACA ASIENTO CONEXIÓN MASA | SEATING PLATE EARTH CONNEC | 1 | 1 | 1 | 1 | | | | |
| 11 | X163007000 | CONMUTADOR ACOPLE TERMOS | THERMOSTAT CONNECT SWITCH | 1 | 1 | 1 | 1 | | | | |
| 12 | X313001000 | "U" SOPORTE TERMOSTATO | THERMOSTAT U SUPPORT | 1 | 1 | 1 | 1 | | | | |
| 13 | X153000000 | TERMOSTATO 50-310 C | THERMOSTAT 50-310 C | 1 | 1 | 1 | 1 | | | | |
| | Q042021000 | TORNIL. AVELLANADO M4x10 A304 | COUNTERSUNK BOLT M4X10 A30 | 2 | 2 | 2 | 2 | | | | |
| 14 | X152656000 | SOPORTE VALVULA | VALVE SUPPORT | 1 | 1 | 1 | 1 | | | | |
| 14a | 12009973 | CONTRATUERCA GAES | COUNTERNUT GAES | 1 | 1 | 1 | 1 | | | | |
| | X723014000 | PASAMUROS Ø 30 | WALL BUSHING Ø 30 | 3 | 3 | 3 | 3 | | | | |
| | Q411304000 | REMACHE AVIBULB Ø 4,8 | AVIBULB RIVET Ø 4.8 | 4 | 4 | 4 | 4 | | | | |
| 15 | X152646000 | PROTECCION SUPERIOR | UPPER PROTECTION | 1 | 1 | 1 | 1 | | | | |

| MOD. | SARTEN BASCULANTE | | ZONA | CONJUNTO FUNCIONAL ELECTRICO | | | | | | PLANO | C-2185 |
|---|---|---|---|---|---|---|---|---|---|---|---|
| ITEM | CODIGO | DENOMINACION | TEXTO | SBE9-10 | SBE9-10 M | SBE9-10 IM | SBE9-15 IM | | | | NOTAS |
| 16 | X343015000 | MICRORRUPTOR 32280001 | MICROSWITCH 32280001 | 1 | 3 | 3 | 3 | | | | ELIMINADO 03.10.,11 |
| 16 | 12040850 | MICRORRUPTOR 250V AC 16A VDE | MICROSWITCH 250V AC 16A VDE | 1 | 3 | 3 | 3 | | | | INTRODUCIDO 03.10.,11 |
| 17 | X152681000 | CAJA PORTA MICRO | MICRO HOLDER BOX | 1 | 1 | 1 | 1 | | | | |
| 18 | X152680000 | SOPORTE CAJA PORTA MICRO | MICRO HOLDER BOX SUPPORT | 1 | 1 | 1 | 1 | | | | |
| | Q221342000 | REMACHE EXAGONAL M5 | HEXAGONAL RIVET M5 | 2 | 2 | 2 | 2 | | | | |
| | Q012031000 | TORNILLO EXAGONAL M5x10 A304 | HEXAGONAL BOLT M5x10 A304 | 2 | 2 | 2 | 2 | | | | |
| | Q302022000 | ARANDELA 16x6x1,2 A304 | WASHER 16x6x1.2 A304 | 2 | 2 | 2 | 2 | | | | |
| | Q262030000 | ARANDELA GROW. A5 A304 | WASHER GROW. A5 A304 | 2 | 2 | 2 | 2 | | | | |
| 19 | Z700603000 | MUELLE 07777 | SPRING 07777 | 1 | 1 | 1 | 1 | | | | |
| 20 | X152682000 | EJE PULSADOR MICRO | MICRO BUTTON SHAFT | 1 | 1 | 1 | 1 | | | | |
| | Q271033000 | ARANDELA DE SEGURIDAD Ø6 | SAFETY WASHER Ø6 | 2 | 2 | 2 | 2 | | | | |
| 21 | P453025000 | BORNES 10 WDU-10203.O | TERMINALS 10 WDU-10203.O | 3 | 3 | 3 | _ | | | | |
| 21 | Z683069000 | BORNA 16 | TERMINAL 16 | _ | _ | _ | 3 | | | | |
| | Z263302000 | BORNA DE PASO AZUL | BLUE THROUGH TERMINAL | 1 | 1 | 1 | _ | | | | |
| | P453026000 | BORNE TIER 10 WPE-10103.O | TERMINAL TIER 10 WPE-10103.O | 1 | 1 | 1 | _ | | | | |
| | Z263303000 | TOPE FINAL | END STOP | 1 | 1 | 1 | _ | | | | |
| | Z683097000 | BORNA PASO WDU16 10204.8 | STEP TERMINAL WDU16 10204.8 | _ | _ | _ | 1 | | | | |
| | Z683070000 | BORNA A TIERRA WEIDMULLER | TERMINAL TO EARTH WEIDMULL | _ | _ | _ | 1 | | | | |
| | Z683096000 | TOPE FINAL WEW35 10590.0 | END STOP WEW35 10590.0 | _ | _ | _ | 1 | | | | |
| | R663055000 | GUIA CONTACTOR L-120 | CONTACTOR GUIDE L-120 | 1 | 1 | 1 | 1 | | | | |
| | Q419005000 | REMACHE 4x8 ALMG3 / ALUMINIO | RIVET 4X8 ALMG3 / ALUMINIUM | 2 | 2 | 2 | 2 | | | | |
| 22 | Z203050000 | CONTAC. SIRIUS 3R 230V.50-60 | CONTACT. SIRIUS 3R 230V.50-60 | 2 | 2 | 2 | _ | | | | |
| 22 | X183011000 | CON.3RT1024-1AN20 230V 50H | CON.3RT1024-1AN20 230V 50H | _ | _ | _ | 2 | | | | |
| | R663055000 | GUIA CONTACTOR L-120 | CONTACTOR GUIDE L-120 | 1 | 1 | 1 | 1 | | | | |
| | Q419005000 | REMACHE 4x8 ALMG3 / ALUMINIO | RIVET 4X8 ALMG3 / ALUMINIUM | 2 | 2 | 2 | 2 | | | | |
| 23 | Z701135000 | E.V.SIMP.220V COD.255.208 | E.V.SIMP.220V COD.255.208 | 1 | 1 | 1 | 1 | | | | |
| | Z601156000 | REGULADOR 8L RO. 254.034 | REGULATOR 8L RED 254.034 | 1 | 1 | 1 | 1 | | | | ELIMINADO 11.11.13 |
| | 12096626 | REGULADOR 8 L (ROJO) | REGULATOR 8L RED | 1 | 1 | 1 | 1 | | | | INTRODUCIDO 11.11.13 |
| 24 | X466119000 | CONJUNTO TUBO LLENADO CR | FILLER PIPE ASSEMBLY CR | 1 | 1 | 1 | 1 | | | | |
| | Q152004000 | TORN. APLASTADO M5x13 A304 | HEXAGONAL FLAT SCREW M5x13 | 2 | 2 | 2 | 2 | | | | |
| | | | | | | | | | | | |

| MOD. | SARTEN BASCULANTE | | ZONA | CONJUNTO FUNCIONAL ELECTRICO | | | | | PLANO | C-2185 | |
|---|---|---|---|---|---|---|---|---|---|---|---|
| ITEM | CODIGO | DENOMINACION | TEXTO | SBE9-10 | SBE9-10 M | SBE9-10 IM | SBE9-15 IM | | | | NOTAS |
| S/Nº | 3676900000 | TUBO GOMA NEGRA D 17*10 | BLACK RUBBER PIPE 17*10 | 1 | 1 | 1 | 1 | | | | |
| | Q881308000 | ABRAZADERA 8-14L | CLAMP 8-14L | 2 | 2 | 2 | 2 | | | | |
| 25 | X142651000 | CUBIERTA BORNAS SBE-910 | TERMINAL COVER SBE-910 | 1 | 1 | 1 | _ | | | | |
| 25 | X422616000 | CUBIERTA BORNAS SBE-915 | TERMINAL COVER SBE-915 | _ | _ | _ | 1 | | | | |
| | Q012032000 | TORNILLO EXAGONAL M5x15 A304 | HEXAGONAL BOLT M5x15 A304 | 3 | 3 | 3 | 3 | | | | |
| | Q262030000 | ARANDELA GROW. A5 A304 | WASHER GROW. A5 A304 | 3 | 3 | 3 | 3 | | | | |
| | Q221342000 | REMACHE EXAGONAL M5 | HEXAGONAL RIVET M5 | 5 | 5 | 5 | 5 | | | | |
| 26 | X142660000 | TAPA CUBIERTA BORNAS SBE-910 | TERMINAL COVER LID SBE-910 | 1 | 1 | _ | _ | | | | |
| 26 | X142652000 | TAPA CUBIER. BORNAS SBE-910 I | TERMINAL COVER LID SBE-910 I | _ | _ | 1 | _ | | | | |
| 26 | X422617000 | TAPA CUBIER. BORNAS SBE-915 | TERMINAL COVER LID SBE-915 | _ | _ | _ | 1 | | | | |
| | X402601000 | ESCUADRA SEPARADOR RESIST. | RESIST. DIVIDER BRACKET | 2 | 2 | 2 | 2 | | | | |
| | Q012032000 | TORNILLO EXAGONAL M5x15 A304 | HEXAGONAL BOLT M5x15 A304 | 5 | 5 | 5 | 5 | | | | |
| | Q262030000 | ARANDELA GROW. A5 A304 | WASHER GROW. A5 A304 | 5 | 5 | 5 | 5 | | | | |
| | Q419005000 | REMACHE 4x8 ALMG3 / ALUMINIO | RIVET 4X8 ALMG3 / ALUMINIUM | 3 | 3 | 3 | 3 | | | | |
| 27 | X142609000 | AMARRE AISLANTE | INSULATION FASTENING | 3 | 3 | 3 | 3 | | | | |
| 28 | X142653000 | PROTECCION AGUA SBE-910 I | WATER PROTECTION SBE-910 I | _ | _ | 1 | _ | | | | |
| 28 | X422618000 | PROTECCION AGUA SBE-915 | WATER PROTECTION SBE-915 | _ | _ | _ | 1 | | | | |
| 29 | X142656000 | AISLANTE 730X520X5 | INSULATION 730X520X5 | 1 | 1 | 1 | _ | | | | |
| 29 | X083016000 | BARLAN 575X515X5 | BARLAN 575X515X5 | _ | _ | _ | 2 | | | | |
| 30 | X143010000 | RESISTENCIA SBE9-00 | RESISTOR SBE9-00 | 6 | 6 | 6 | 9 | | | | |
| S/Nº | X142620000 | AMARRE RESISTENCIAS SBE9-00 | RESISTOR FASTENING SBE9-00 | 6 | 6 | 6 | 9 | | | | |
| | Q162050000 | TUERCA EXAGONAL M8x1 INOX. | HEXAGONAL NUT M8x1 INOX. | 18 | 18 | 18 | 27 | | | | |
| | Q302024000 | ARANDELA Ø44x9x1,5 | WASHER Ø44x9x1.5 | 18 | 18 | 18 | 27 | | | | |
| 31 | X142650000 | CUBIERTA RESISTENC. SBE9-10 | RESISTOR COVER SBE9-10 | 1 | 1 | 1 | _ | | | | |
| 31 | X422615000 | CUBIERTA RESISTENC. SBE9-15 | RESISTOR COVER SBE9-15 | _ | _ | _ | 1 | | | | |
| 32 | X342602000 | SOPORTE MICRO | MICRO BRACKET | _ | 1 | 1 | 1 | | | | |
| | Q221342000 | REMACHE EXAGONAL M5 | HEXAGONAL RIVET M5 | _ | 2 | 2 | 2 | | | | |
| | Q012031000 | TORNILLO EXAGONAL M5x10 A304 | HEXAGONAL BOLT M5x10 A304 | _ | 2 | 2 | 2 | | | | |
| | Q302022000 | ARANDELA 16x6x1,2 A304 | WASHER 16x6x1.2 A304 | _ | 2 | 2 | 2 | | | | |
| | | | | | | | | | | | |
| | | | | | | | | | | | |

| MOD. | SARTEN BASCULANTE | | ZONA | CONJUNTO FUNCIONAL ELECTRICO | | | | | PLANO | C-2185 | |
|---|---|---|---|---|---|---|---|---|---|---|---|
| ITEM | CODIGO | DENOMINACION | TEXTO | SBE9-10 | SBE9-10 M | SBE9-10 IM | SBE9-15 IM | | | | NOTAS |
| 33 | X343021000 | TRANSFORMADOR | TRANSFORMER | _ | 1 | 1 | 1 | | | | |
| | Q012031000 | TORNILLO EXAGONAL M5x10 A304 | HEXAGONAL BOLT M5x10 A304 | _ | 4 | 4 | 4 | | | | |
| | Q302022000 | ARANDELA 16x6x1,2 A304 | WASHER 16x6x1.2 A304 | _ | 4 | 4 | 4 | | | | |
| | X342605000 | TAPA TRANSFORMADOR | TRANSFORMER COVER | _ | 1 | 1 | 1 | | | | |
| | Q012031000 | TORNILLO EXAGONAL M5x10 A304 | HEXAGONAL BOLT M5x10 A304 | _ | 4 | 4 | 4 | | | | |
| | Q302022000 | ARANDELA 16x6x1,2 A304 | WASHER 16x6x1.2 A304 | _ | 4 | 4 | 4 | | | | |
| | X342606000 | CAJA TRANSFORMADOR | TRANSFORMER BOX | _ | 1 | 1 | 1 | | | | |
| | Q012031000 | TORNILLO EXAGONAL M5x10 A304 | HEXAGONAL BOLT M5x10 A304 | _ | 4 | 4 | 4 | | | | |
| | Q302022000 | ARANDELA 16x6x1,2 A304 | WASHER 16x6x1.2 A304 | _ | 4 | 4 | 4 | | | | |
| | X342609000 | ESCUADRA AMARRE TAPA TRANS. | TRANSF. COVER FAST. BRACKET | _ | 1 | 1 | 1 | | | | |
| | Q419005000 | REMACHE 4x8 ALMG3 / ALUMINIO | RIVET 4X8 ALMG3 / ALUMINIUM | _ | 4 | 4 | 4 | | | | |
| 34 | X343022000 | PUENTE RECTIFICADOR FB 3502 | RECTIFIER BRIDGE FB 3502 | _ | 1 | 1 | 1 | | | | |
| 35 | 12024804 | INTERRUPTOR PULSADOR | PRESS BUTTON SWITCH | _ | 2 | 2 | 2 | | | | |
| 35b | 12009956 | BOTON PULSADOR | PRESS BUTTON | _ | 2 | 2 | 2 | | | | |
| 35a | 12009331 | CUERPO PULSADOR | PRESS BUTTON BODY | _ | 1 | 1 | 1 | | | | |
| S/Nº | 12008786 | PROTECTOR PULSADOR | PRESS BUTTON PROTECTOR | _ | 1 | 1 | 1 | | | | |
| | X342608000 | SOPORTE PULSADOR | BUTTON SUPPORT | _ | 1 | 1 | 1 | | | | |
| | X342611000 | TOPE PULSADOR | PRESS BUTTON STOP | _ | 1 | 1 | 1 | | | | |
| | Q012032000 | TORNILLO EXAGONAL M5x15 A304 | HEXAGONAL BOLT M5x15 A304 | _ | 4 | 4 | 4 | | | | |
| | Q262030000 | ARANDELA GROW. A5 A304 | WASHER GROW. A5 A304 | _ | 4 | 4 | 4 | | | | |
| | Q162030000 | TUERCA EXAGONAL M5 | HEXAGONAL NUT M5 | _ | 4 | 4 | 4 | | | | |

| MOD. | SARTEN BASCULANTE | ZONA | VARIOS | PLANO | |
|---|---|---|---|---|---|

| ITEM | CODIGO | DENOMINACION | TEXTO | SBE9-10 | SBE9-10 M | SBE9-15 IM | | | | NOTAS |
|---|---|---|---|---|---|---|---|---|---|---|
| | X046501000 | FOLLETO DE INSTRUC.SBE900 | INSTRUCTION LEAFLET SBE900 | 1 | 1 | 1 | | | | |
| | X483002000 | ESQUEMA TEORICO SBE7-10 | THEORETICAL DIAGRAM SBE7-1 | 1 | 1 | _ | | | | ELIMINADO 02.05.11 HC-80148 |
| | X403002000 | ESQUEMA TEORICO ADHESIVO | THEOR. DIAGRAM LABEL | _ | _ | 1 | | | | PLANO HC-75708 |
| | X403002000 | ESQUEMA TEORICO ADHESIVO | THEOR. DIAGRAM LABEL | 1 | 1 | _ | | | | INTRODUCIDO 02.05.11 HC-75708 |
| | X483003000 | PLANO DE MONTAJE SGE7-10 | ASSEMBLY PLAN SGE7-10 | 1 | 1 | 1 | | | | PLANO HC-80160 |
| | X463007000 | LEYENDA SARTEN BASCULANTE | TILTING PAN LEGEND | 1 | 1 | 1 | | | | INTRODUCIDO 02.05.11 HC-83262 |
| | X143004000 | CABLEADO RESISTENCIAS | RESISTOR WIRING | 1 | 1 | _ | | | | |
| | X423004000 | CABLEADO RESISTENC. SBE9-15 | RESISTOR WIRING SBE9-15 | _ | _ | 1 | | | | |
| | X483004000 | CABLEADO ELECTROVA. SBE7-10 | SOLENOID VALVE WIRING SBE7 | 1 | 1 | 1 | | | | |
| | X483005000 | CABLEADO ELECTROVA. SBE9- S | SOLENOID VALVE WIRING SBE9 | 1 | 1 | 1 | | | | ELIMINADO 02.05.11 |
| | X143016000 | CABLE. REGLETA CONTACTOR 10 | CABLE. CONTACTOR STRIP 10 | 2 | 2 | _ | | | | |
| | X423005000 | CABLE. REGLETA CONTACTOR 15 | CABLE. CONTACTOR STRIP 15 | _ | _ | 2 | | | | ELIMINADO 13.02.12 |
| | X183008000 | CABLE. REGLETA CONTACTOR 15 | CABLE. CONTACTOR STRIP 15 | _ | _ | 2 | | | | INTRODUCIDO 13.02.12 |
| | X143015000 | CABLEADO SBE | WIRING SBE | 1 | 1 | 1 | | | | |
| | X283000000 | CABLEADO MOTOR | MOTOR WIRING | _ | 1 | 1 | | | | |
| | X463006000 | CABLEADO ENTRADA DE AGUA | WATER INPUT WIRING | 1 | 1 | 1 | | | | |
| | | | | | | | | | | |
| | | | | | | | | | | |
| | | | | | | | | | | |
| | | | | | | | | | | |
| | | | | | | | | | | |
| | | | | | | | | | | |
| | | | | | | | | | | |
| | | | | | | | | | | |
| | | | | | | | | | | |
| | | | | | | | | | | |
| | | | | | | | | | | |
| | | | | | | | | | | |
| | | | | | | | | | | |
| | | | | | | | | | | |

| MOD. | SARTEN BASCULANTE | ZONA | REPUESTOS RECOMENDADOS<br>RECOMMENDED SPARE PART | PLANO | |
|---|---|---|---|---|---|

| ITEM | CODIGO | DENOMINACION | TEXTO | SBE9-10 | SBE9-10 M | SBE9-10 IM | SBE9-15 IM | | | | |
|---|---|---|---|---|---|---|---|---|---|---|---|
| 7 | S116121000 | RESORTE TAPA 07199 | SPRING COVER 07199 | 2 | 2 | 2 | 2 | | | | C-2180 |
| 16 | X156115000 | CASQUILLO | BUSHING | 1 | _ | _ | _ | | | | C-2181 |
| 10 | X126114000 | JUNTA UNIVERSAL 107A | UNIVERSAL JOINT 107A | _ | 1 | 1 | 1 | | | | C-2182 |
| 15 | X346107000 | ACOPLAMIE. ELASTICO LOVEJOY | ELASTIC LOVEJOY COUPLING | _ | 1 | 1 | 1 | | | | C-2182 |
| 17 | X343020000 | MOTORREDUCTOR (BOSCH) | GEAR MOTOR (BOSCH) | _ | 1 | 1 | 1 | | | | C-2182 |
| 4 | T343008000 | CONMUTADOR HGC | HGC SWITCH | 1 | 1 | 1 | 1 | | | | C-2185 |
| 7 | 12047390 | PILOTO VERDE 230V AC 8KW 16MM | GREEN PILOT 230V AC 8KW 16M | 1 | 1 | 1 | 1 | | | | C-2185 |
| | 12024669 | PILOTO AMBAR Ø18 | AMBER PILOT Ø18 | 1 | 1 | 1 | 1 | | | | C-2185 |
| 11 | X163007000 | CONMUTADOR ACOPLE TERMOS | THERMOSTAT CONNECT SWITC | 1 | 1 | 1 | 1 | | | | C-2185 |
| 13 | X153000000 | TERMOSTATO 50-310 C | THERMOSTAT 50-310 C | 1 | 1 | 1 | 1 | | | | C-2185 |
| 16 | 12040850 | MICRORRUPTOR 250V AC 16A VDE | MICROSWITCH 250V AC 16A VDE | 1 | 3 | 3 | 3 | | | | C-2185 |
| 23 | Z701135000 | E.V.SIMP.220V COD.255.208 | E.V.SIMP.220V COD.255.208 | 1 | 1 | 1 | 1 | | | | C-2185 |
| 30 | X143010000 | RESISTENCIA SBE9-00 | RESISTOR SBE9-00 | 6 | 6 | 6 | 9 | | | | C-2185 |
| 32 | X342602000 | SOPORTE MICRO | MICRO BRACKET | _ | 1 | 1 | 1 | | | | C-2185 |
| 33 | X343021000 | TRANSFORMADOR | TRANSFORMER | _ | 1 | 1 | 1 | | | | C-2185 |
| 34 | X343022000 | PUENTE RECTIFICADOR FB 3502 | RECTIFIER BRIDGE FB 3502 | _ | 1 | 1 | 1 | | | | C-2185 |
| 35 | 12024804 | INTERRUPTOR PULSADOR | PRESS BUTTON SWITCH | _ | 2 | 2 | 2 | | | | C-2185 |
| 35b | 12009956 | BOTON PULSADOR | PRESS BUTTON | _ | 2 | 2 | 2 | | | | C-2185 |
| 35a | 12009331 | CUERPO PULSADOR | PRESS BUTTON BODY | _ | 1 | 1 | 1 | | | | C-2185 |

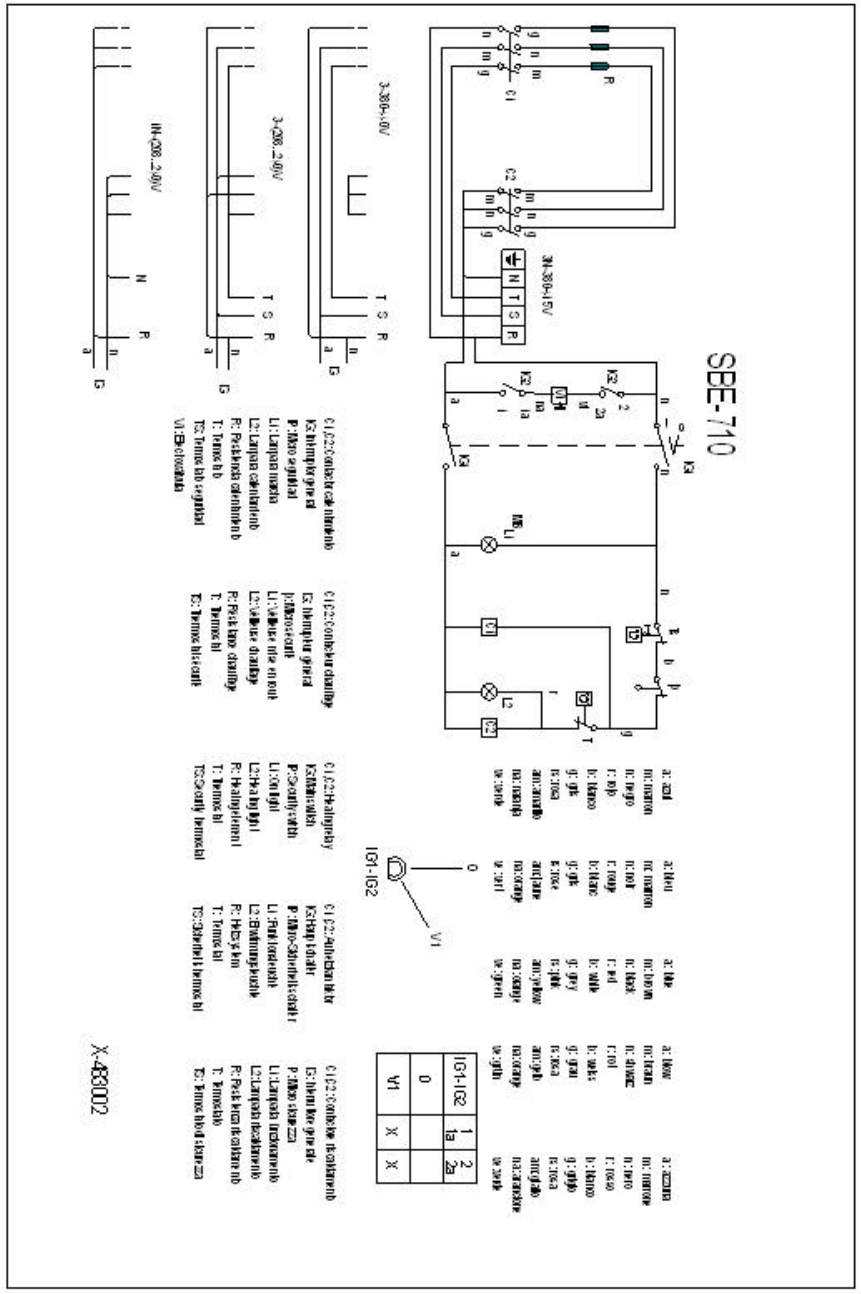


| | | | | | | |
|---|---|---|---|---|---|---|
| | Esquema teórico SBE | | Poliester mate | X-483002 | | |
| N° | Pieza | Cant. | Material | N° Clasificacion | Acabado | |
| N° | Modificacion | | Propuestade | Fecha | Tolerancias generales | |
| | | | | | <5± | 50–100± : |
| | | | | | 5–25± : | >100± |
| | | | | | 25–50± : | <X± |

| | Firma | Fecha |
|---|---|---|
| Dibujado | J.Etxeberria | 30-11-2007 |
| Proyectado | J.Etxeberria | 30-11-2007 |
| Comprobado | | |
| Escala | | |

FAGOR

Fagor Industrial,Koop.Ek., Mugatua

Mecanizado superficial

SARTEN BASCULANTE

Plano numero HC-80148

Sustituye al N°

Sustituido por

# SBE9-10M SBE9-15

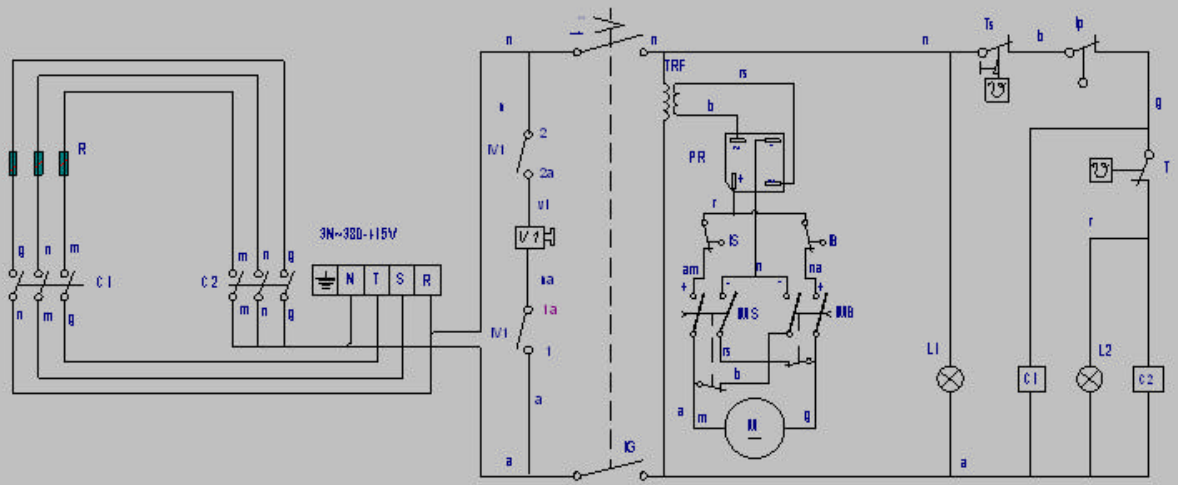


| | | | | |
|---|---|---|---|---|
| a: azul | a: bleu | a: blue | a: blow | a: azzurra |
| m: marron | m: marron | m: brown | m: braun | m: marrone |
| n: negro | n: noir | n: black | n: shwarz | n: nero |
| r: rojo | r: rouge | r: red | r: rot | r: rosso |
| b: blanco | b: blanc | b: white | b: weiss | b: bianco |
| g: gris | g: gris | g: grey | g: grau | g: grigio |
| rs: rosa | rs: rose | rs: pink | rs: rosa | rs: rosa |
| am: amarillo | am: jaune | am: yellow | am: gelb | am: giallo |
| na: naranja | na: orange | na: orange | na: orange | na: arancione |
| ue: uerde | ue: uert | ue: green | ue: grün | ue: uerde |

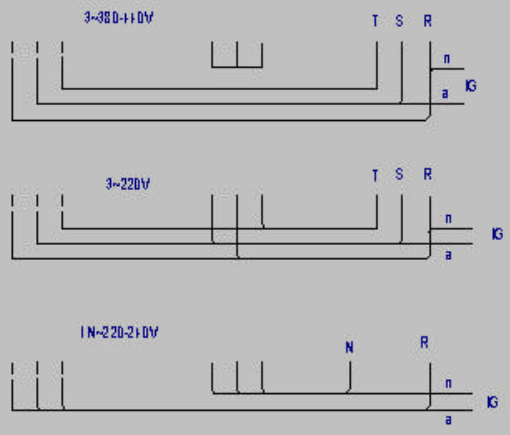


C1,C2: Contactor calentamiento
IB: Micro tope bajada

IMB: Pulsador bajada
IMS: Pulsador subida
IP: Micro seguridad
IS: Micro tope subida
IVI: Interruptor electrovaluula
L1: Lampara marcha
L2: Lampara calentamiento
M: Motor
PR: Puente rectificador
R: Resistencia calentamiento
T: Termostato
TRF: Transformador
TS: Termostato seguridad
VI: Electrovaluula

C1,C2: Contacteur chauffage
IB: Micro bride descente

IMB: Commande de baisse
IMS: Commande de montée
Ip: Micro sécurité
Is: Micro bride montée
IVI: Interrupteur d'électrouanne
L1: Veilleuse mise en route
L2: Veilleuse chauffage
M: Moteur
PR: Pont rectificateur
R: Résistance chauffage
T: Thermostat
TRF: Transformateur
TS: Thermostat sécurité
VI: Électrouanne

C1,C2: Heating relay
IB: Descent tops witch

IMB: Descent switch
IMS: Eleuation switch
IP: Security switch
IS: Eleuating top switch
IVI: Electorualue switch
L1: On light
L2: Heating light
M: Motor
PR: Rectifier bridge
R: Heating element
T: Thermostat
TRF: Transformer
TS: Security thermostat
VI: Electorualue switch

C1,C2: Aufheizkantaktor
IB: Mikro-Schalter unten

IMB: Kippschalter unten
IMS: Kippschalter oben
IP: Mikro-Sicherheitsschalter
IS: Mikro-Schalter oben

L1: Funktionsleuchte
L2: Erwärmungsleuchte
M: Motor
PR: Richtleiterüberbrückung
R: Heizsystem
T: Termostat
TRF: Transformator
TS: Sicherheitsthermostat

C1,C2: Contactore riscaldamento
IB: Micro arresto discesa

IMB: Pulsante discesa
IMS: Pulsante salita
IP: Micro sicurezza
IS: Micro arresto salita
IVI: Interruttore de electrovaluola
L1: Lampada funzionamento
L2: Lampada riscaldamento
M: Motore
PR: Ponte rettificatore
R: Resistenza riscaldamento
T: Termostato
TRF: Transformatore
TS: Termostato di sicurezza
VI: Electrovaluola

| | | | | | | |
|---|---|---|---|---|---|---|
| | | | | | | |
| | | | | | | |
| | Esquema teórico SBEM | | Poliester mate | X-403002 | | |
| Nº | Pieza | Cant. | Material | Nº Clasificacion | Acabado | |
| Nº | Modificacion | | Propuesta de | Fecha | Tolerancias generales | |
| 1 | VI sartuda | | e.carrascal | 2008-09-09 | <5± | 50-400± : |
| | | | | | 5-25± : | >400± |
| | | | | | 25-50± : | ○± |
| | | | | | | |

| | Firma | Fecha |
|---|---|---|
| Dibujado | KONTXI | 9/5/2001 |
| Proyectado | | |
| Comprobado | | |
| Escala | | |

FAGOR

Fagor Industrial, Koop. Elk., Mugatua

Mecanizado superficial

ZARTAGIN IRAULGARRIA

Plano número HC-75708 -01

Sustituye al Nº

Sustituido por

Plano hauez dalete erakuez kentzaguna kamenizgale

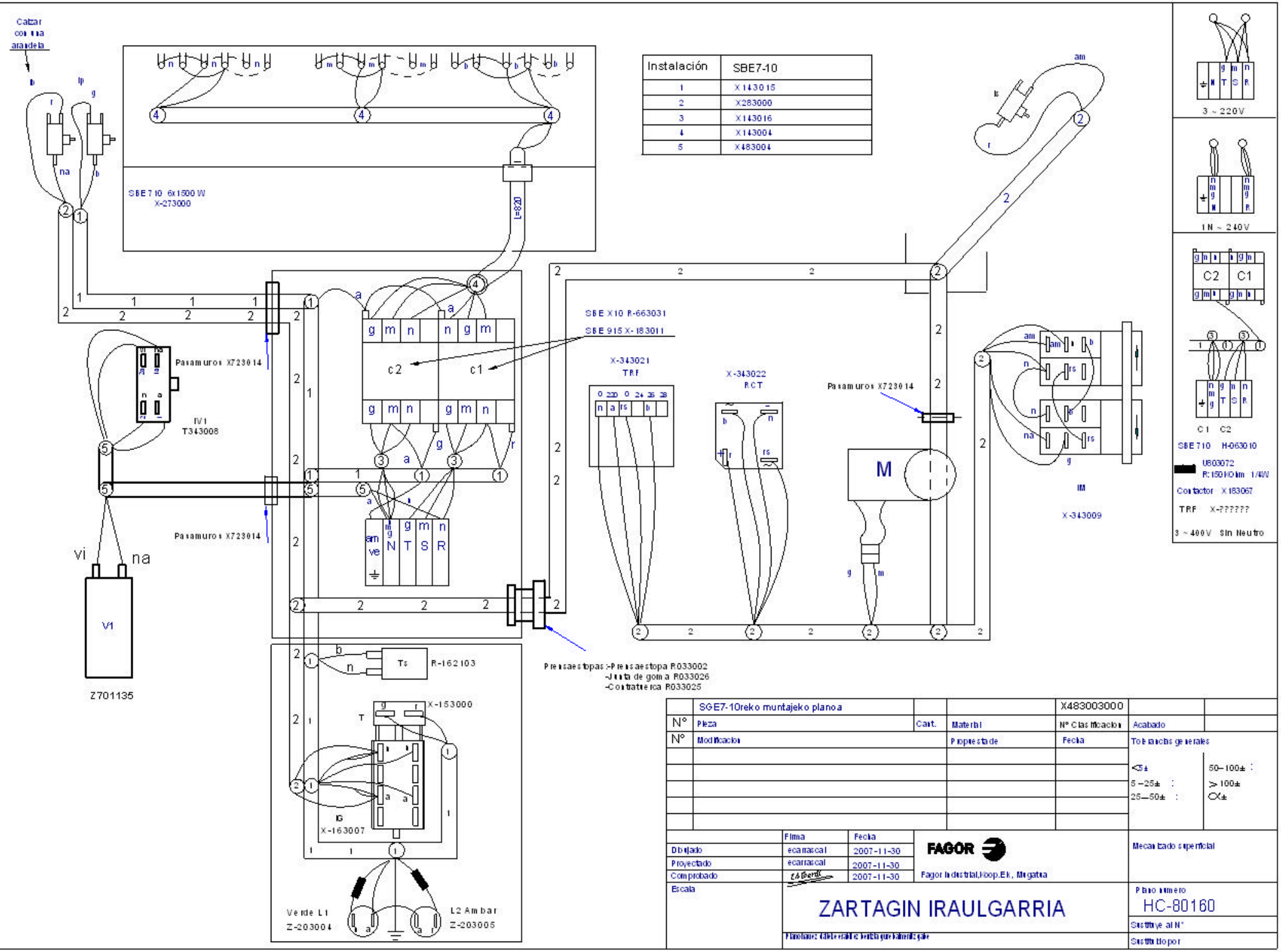


| Instalación | SBE7-10 |
|---|---|
| 1 | X143015 |
| 2 | X283000 |
| 3 | X143016 |
| 4 | X143004 |
| 5 | X483004 |

| | | | | | |
|---|---|---|---|---|---|
| | SGE7-10reko muntajeko planoa | | | X483003000 | |
| Nº | Pieza | Cant. | Material | Nº Clasificación | Acabado |
| Nº | Modificación | | Propiedad de | Fecha | Tolerancias generales |

| | Firma | Fecha |
|---|---|---|
| Dibujado | ecarrascal | 2007-11-30 |
| Proyectado | ecarrascal | 2007-11-30 |
| Comprobado | | 2007-11-30 |
| Escala | | |

FAGOR

Fagor Industrial,Koop.Elk., Mogatxa

Mecanizado superficial

ZARTAGIN IRAULGARRIA

Plano número HC-80160

Sustituye al Nº

Sustituido por

| Simb/LENG | | ESPAÑOL | ENGLISH | FRANÇAIS | DEUTSCH | ITALIANO |
|---|---|---|---|---|---|---|
| C1, C2 | = | Contactor Calentamiento | Contacteur Chauffe | Heating Contactor | Heizschütz | Contatore Riscaldamento |
| CN | = | Control de Nivel de agua | Control of water Level | Commande de niveau d'eau | Steuerung des Wasserspiegeles | Controllo del livello d'acqua |
| E | = | Generador de Chispa | Spark generator | Générateur d'étincelle | Funkengenerator | Generatore della scintilla |
| IB | = | Micro tope bajada | Microswitch of lowered Limit | Microcontact de la limite abaissée | Mikroschalter der gesenkten Begrenzung | Microinterruttore del limite abbassato |
| IG | = | Interruptor general | General switch | Commutateur général | Allgemeiner Schalter | Interruttore generale |
| IGV | = | Interruptor electrovalvulas de agua | Switch electrovalvula water | Commutez l'eau d'electrovalvula | Schalten Sie electrovalvula Wasser | Commuti l'acqua di electrovalvula |
| IE | = | Pulsador de Encendido | Ignition Switch | Commutateur d'allumage | Zündung-Schalter | Interruttore di accensione |
| IMB | = | Pulsador bajada | lowered switch | commutateur abaissé | gesenkter Schalter | interruttore abbassato |
| IMS | = | Pulsador subida | Raised switch | Commutateur augmenté | Angehobener Schalter | Interruttore sollevato |
| IP | = | Micro seguridad | security microswitch | microcontact de sécurité | Sicherheitsmikroschalter | microinterruttore di sicurezza |
| IS | = | Micro tope subida | Microswitch of rise Limit | Microcontact de la limite d'élévation | Mikroschalter der Aufstieg Begrenzung | Microinterruttore del limite di aumento |
| L1 | = | Lámpara marcha | Operation Light | Lumière d'opération | Betriebs-Licht | Luce di funzionamento |
| L2 | = | Lámpara calentamiento | Heating Light | Lumière de chauffage | Heizungs-Licht | Luce del riscaldamento |
| M | = | Motor de elevacion | Motor of elevation | Moteur d'altitude | Motor des Aufzugs | Motore dell'altezza |
| P | = | Presostato de Camara | Water Level Switch | Commutateur de niveau d'eau | Wasserspiegel-Schalter | Interruttore del livello d'acqua |
| PR | = | Puente rectificador | Electrical bridge rectifier | Pont redresseur électrique | Elektrischer Brückengleichrichter | Raddrizzatore a ponte elettrico |
| R | = | Resistencia Calentamiento. | Résistance Chauffe | Heating Resistors | Widerstand Aufheizung | Resistenza Riscaldamento |
| RE | = | Regulador Energia | Regulator of Energy | Régulateur d'énergie | Regler von Energie | Regolatore di energia |
| T | = | Termostato | Thermostat | Thermostat | Thermostat | Termostato |
| TRF | = | Transformador | Transformer | Transformateur | Transformator | Trasformatore |
| TS | = | Termostato de seguridad | Security Thermostat | Thermostat de sécurité | Sicherheits-Thermostat | Termostato di sicurezza |
| TRP | = | Termopar | Thermocouple | Thermocouple | Thermoelement | Termocoppia |
| VG1,VG2 | = | ElectroVálvula gas | Electrical gas valve | Clapet à gaz électrique | Elektrisches Gichtventil | Valvola a gas elettrica |
| V1 | = | Valvula Agua CALIENTE | ElectroValve of Hot Water | Électrovalve d'eau chaude | Elektroventil des Heißwassers | Elettrovalvola di acqua calda |
| V2 | = | Valvula Agua FRIA | ElectroValve of cold Water | Électrovalve d'eau froide | Elektroventil des kalten Wassers | Elettrovalvola di acqua fredda |
| V3 | = | Valvula Agua Caldera | electrovalve of water boiler | électrovalve de chauffe-eau | Elektroventil des Warmwasserboilers | elettrovalvola del reattore ad acqua |
| | | | | | | |
| | = | **COLORES** | **COLOUR** | **COULEURS** | **FARBEN** | **COLORE** |
| a | = | Azul | Blue | Bleu | Blau | Blu |
| am | = | Amarillo | Yellow | Jaune | Gelb | Giallo |
| am/ve | = | Amarillo/verde | Yellow / green | Jaune / vert | Gelb/grün | Giallo/verde |
| b | = | Blanco | White | Blanc | Weiß | Bianco |
| g | = | Gris | Grey | Gris | Grau | Grigio |
| m | = | Marrón | Brown | Marron | Braun | Marrone |
| n | = | Negro | Black | Noir | Schwarz | Nero |
| na | = | Naranja | Orange | Orange | Orange | Arancio |
| r | = | Rojo | Red | Rouge | Rot | Rosso |
| rs | = | Rosa | Pink | Rose | Rosa | Roseo |
| ve | = | Verde | Green | Vert | Grün | Verde |
| vi | = | Violeta | Purple | Violet | Violett | Viola |
| | | | | | | **X463007000** |