DESPIECE TECNICO

Lavavajillas de apertura frontal
Lave-vaisselle à ouverture frontale
Front loading dishwasher
Geschirrspülmaschinen mit frontbeladung
Lavastoviglie ad apertura frontale
Lava-louças de apertura frontal

Modelos:

AD-48 W

Julio 2011 June

Revisado Julio 2013 July Revised

FAGOR

FAGOR INDUSTRIAL

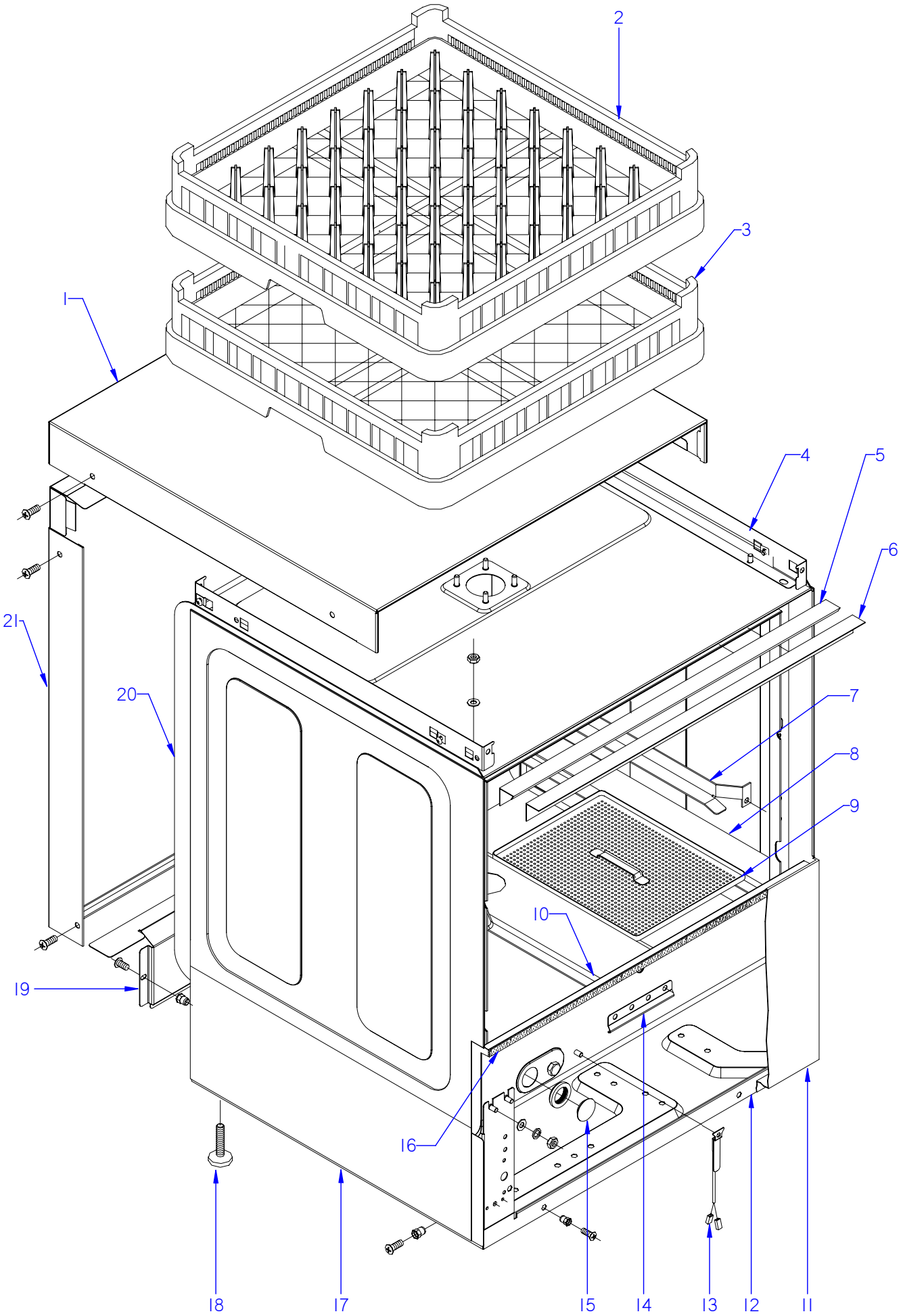

ITEM MARCADO EN COLOR = REPUESTO RECOMENDADO
COLOURED ITEM = RECOMMENDED SPARE PART

Nº plano / N º plane	Firma	Fecha / Date	Denominación / Denomination: MUEBLE / FITTING	Lamina / Sheet	
C-2837		2011-07	LAVAVAJILLAS AD-48 W	1	Fagor Industrial S.Coop. FAGOR Oñate

MOD.	LAVAVAJILLAS / DISWASHER	ZONA / ZONE	MUEBLE / FITTING	PLANO DIAGRAM	C-2837

ITEM	CODIGO REFERENCE	DENOMINACION	DENOMINATION	AD-48 W								ELIMINADO ELIMINATED	INTRODUCID. INTRODUCED	NOTAS
1	Z202929000	TAPA AD	COVER	1										
	Q152004000	TORNIL, APLASTADO M5x13 A304	FLAT HEADED BOLT M5x13 A304	6										
2	Z655302000	CESTILLO PLATOS CP-16-18	BASKET CP-16-18	2										
3	Z655301000	CESTILLO BASE CT-10	BASE BASKET CT-10	2								30.11.12		
3	12025011	CESTILLO BASE CT-10	BASE BASKET CT-10	1									30.11.12	
	Z209121000	TOPE 50x50x80	TOP 50x50x80	2										
4	Z200346000	ESCUADRA AMARRE TAPA	FASTENING BRACKET COVER	2										
	Q232040000	ARANDELA A6	WASHER A6	4										
	Q162040000	TUERCA EXAGONAL M6	HEXAGONAL NUT M6	4										
	Q221012000	TUERCA RAPIDA M,5	RAPID NUT M,5	6										
	Q012073000	TORNILLO EXAGONAL M12X20	HEXAGONAL BOLT M12X20	3										
	Q306024000	JUNTA18X12.5X1.5	SEAL 18X12.5X1.5	3										
	Q162070000	TUERCA EXAGONAL M12	HEXAGONAL NUT M12	3										
5	Z200315000	PERFIL CAJA	BOX PROFILE	1										
6	Z200309000	ESCUADRA SUJECCION PERFIL	FASTENING BRACKET PROFILE	1										
7	Z200347000	GUIA CESTILLO DERECHO	RIGHT BASKET GUIDE	1										
S/Nº	Z200348000	GUIA CESTILLO IZQUIERDO	LEFT BASKET GUIDE	1										
	Q162040000	TUERCA EXAGONAL M6	WASHER A6	4										
	Q232040000	ARANDELA A6	HEXAGONAL NUT M6	4										
8	Z210805000	SOPORTE DERECHO BANDEJAS	RIGHT TRAY SUPPORT	1										
S/Nº	Z210806000	SOPORTE IZDO. BANDEJAS	LEFT TRAY SUPPORT	1										
	Q162040000	TUERCA EXAGONAL M6	HEXAGONAL NUT M6	4										
	Q232040000	ARANDELA A6	WASHER A6	4										
9	Z210802000	BANDEJA COMPLETA	COMPLETE TRAY	4										
10	Z210804000	SOPORTE CENTRAL BANDEJAS	TRAY SUPPORT CENTRAL	1										
11	Z228812000	PANEL FRONTAL B SIN PUERTA	FRONT PANEL B	1										
	Q152004000	TORNIL, APLASTADO M5x13 A304	FLAT HEADED BOLT M5x13 A304	2										
12	Z200101000	ARMAZON COMPLETO	COMPLETE FRAME	1										
13	Z268004000	SONDA TEMPERATURA GICAR	TEMPERATURA PROBE GICAR	1										
S/Nº	Z718004000	AMARRE SONDA	PROBE CATCH	2								19.10.11		
	Q162020000	TUERCA EXAGONAL M4	HEXAGONAL NUT M4	1										

MOD.	LAVAVAJILLAS / DISWASHER	ZONA / ZONE	MUEBLE / FITTING	PLANO DIAGRAM	C-2837

ITEM	CODIGO REFERENCE	DENOMINACION	DENOMINATION	AD-48 W								ELIMINADO ELIMINATED	INTRODUCID. INTRODUCED	NOTAS
14	Z748008000	SOPORTE BULBO TERMOSTATO	THERMOSTAT BULB SUPPORT	1								29.02.12		
14	12043725	SOPORTE BULBO TERMO. TANQUE	THERMOSTAT BULB SUPPORT	1									29.02.12	
	Q162040000	TUERCA EXAGONAL M6	HEXAGONAL NUT M6	2										
	Q262040000	ARANDELA GROW. A6 A.304	WASHER GROW. A6 A.304	2										
15	P443060000	TAPON	STOPPER	1										
	N503017000	SOPORTE TERMOSTATO 1001713	THERMOSTAT SUPPORT 1001713	1										
16	Z200313000	PERFIL GOMA ESPONJOSA	GOMA PROFILE	1										
17	Z202903000	PANEL LATERAL IZQUIERDO	LEFT SIDE PANEL	1										
S/Nº	Z202902000	PANEL LATERAL DERECHO	RIGHT SIDE PANEL	1										
	Q152004000	TORNIL, APLASTADO M5x13 A304	FLAT HEADED BOLT M5x13 A304	4										
	Q221012000	TUERCA RAPIDA M,5	RAPID NUT M,5	2										
18	Z200107000	PATA REGULABLE	ADJUSTABLE LEG	4										
19	Z202921000	PANEL POSTERIOR INFERI. ALUM.	LOWER REAR PANEL ALUM.	1										
	Q152004000	TORNIL, APLASTADO M5x13 A304	FLAT HEADED BOLT M5x13 A304	2										
20	Z200341000	CAJA SOLDADA LJ. A.F. AD	WELDED BOX LJ. A.F. AD	1										
	Q162040000	TUERCA EXAGONAL M6	HEXAGONAL NUT M6	8										
	Q302022000	ARANDELA 16X6X1.2 A.304	WASHER 16X6X1.2 A.304	8										
21	Z202904000	PANEL POSTERIOR ALU.FI-30	REAR PANEL ALU.FI-30	1										
	Q152004000	TORNIL, APLASTADO M5x13 A304	FLAT HEADED BOLT M5x13 A304	4										

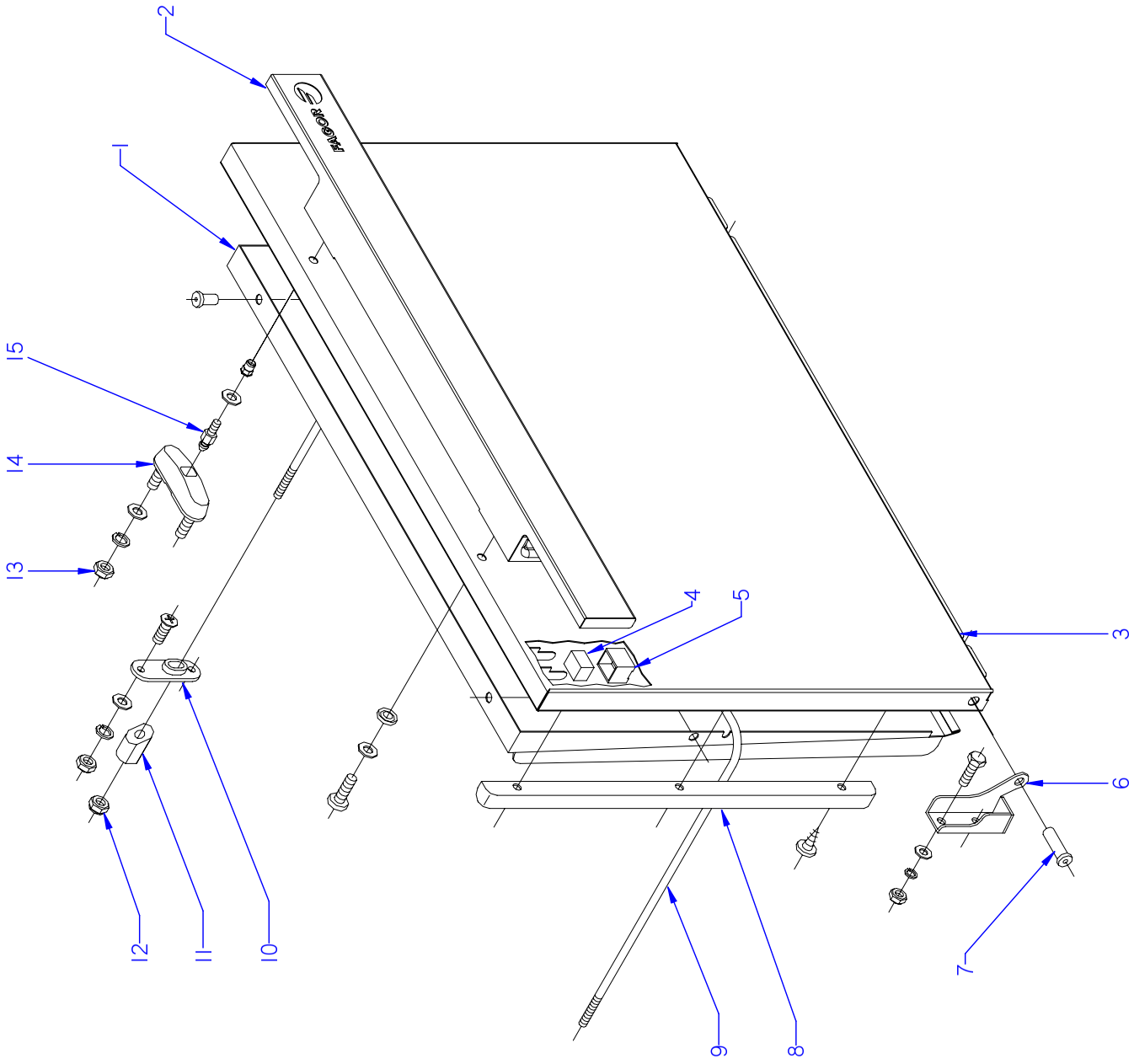

ITEM MARCADO EN COLOR = REPUESTO RECOMENDADO
COLOURED ITEM = RECOMMENDED SPARE PART

Nº plano / N º plane	Firma	Fecha / Date	Denominación / Denomination: PUERTA / DOOR	Lamina / Sheet	
C-2838		2011-07	LAVAVAJILLAS AD-48 W	2	Fagor Industrial S.Coop. Oñate FAGOR

MOD.	LAVAVAJILLAS / DISWASHER	ZONA / ZONE	PUERTA / DOOR	PLANO DIAGRAM	C-2838

ITEM	CODIGO REFERENCE	DENOMINACION	DENOMINATION	AD-48 W								ELIMINADO ELIMINATED	INTRODUCID. INTRODUCED	NOTAS
	12091060	**KIT PUERTA AD-48 / AD-64 AF**	**DOOR AD-48 / AD-64 AF KIT**	**1**										
1	Z200556000	CONTRAPUERTA COMPLETA	COMPL. DOOR REVERSE	1										
	Q162030000	TUERCA EXAGONAL M5	HEXAGONAL NUT M5	2										
	Q232030000	ARANDELA A5	WASHER A5	2										
2	Z200565000	ASA AD-48	HANDLE FI30	1										
S/Nº	Z210503000	TACO SUJECCION	FASTENING RAWL	2										
3	Z200561000	PUERTA COMPLETA AD	COMPLETE DOOR AD	1										
4	Z200506000	IMAN	MAGNET	1										
5	Z200507000	PROTECTOR IMAN	MAGNET PROTECTOR	1										
6	Z400514000	BISAGRA IZQUIERDA T-C.	LEFT HINGE T-C.	1										
S/Nº	Z400515000	BISAGRA DERECHA T-C.	RIGHT HINGE T-C.	1										
	Q012042000	TORNILLO EXAGONAL M6X15	HEXAGONAL BOLT M6x15	4										
	Q262040000	ARANDELAGROW. A6 A.304	WASHER GROW. A6 A.304	4										
	Q162040000	TUERCA EXAGONAL M6	HEXAGONAL NUT M6	4										
7	Z400516000	EJE PUERTA	DOOR SHAFT	2										
8	Z200524000	MARCO PUERTA	DOOR FRAME	2										
	Q412000000	REMACHE TUBULAR 4 x 8	TUBULAR RIVET 4 x 8	10										
9	Z200555000	VARILLA TENSOR	TIGHTENER ROD	1										
10	Z200310000	SOPORTE TENSOR	TIGHTENER SUPPOR	2										
	Q152004000	TORNIL, APLASTADO M5x13 A304	FLAT HEADED BOLT M5x13 A304	4										
	Q162030000	TUERCA EXAGONAL M5	HEXAGONAL NUT M5	4										
	Q262030000	ARANDELA GROW. A5 A.304	WASHER GROW. A5 A.304	4										
11	Z200522000	TENSOR PUERTA	TIGHTENER DOOR	2										
12	Q222012000	TUERCA AUTOB. M6	SELF-LOCKING NUT M6	2										
13	Q222012000	TUERCA AUTOB. M6	SELF-LOCKING NUT M6	4										
14	Z200607000	CONJUNTO CIERRE PUER.T-CO	LOCK UNIT PUERTAT-CO	2										
15	Z200601000	ENGANCHE CIERRE	LOCK LATCH	2										

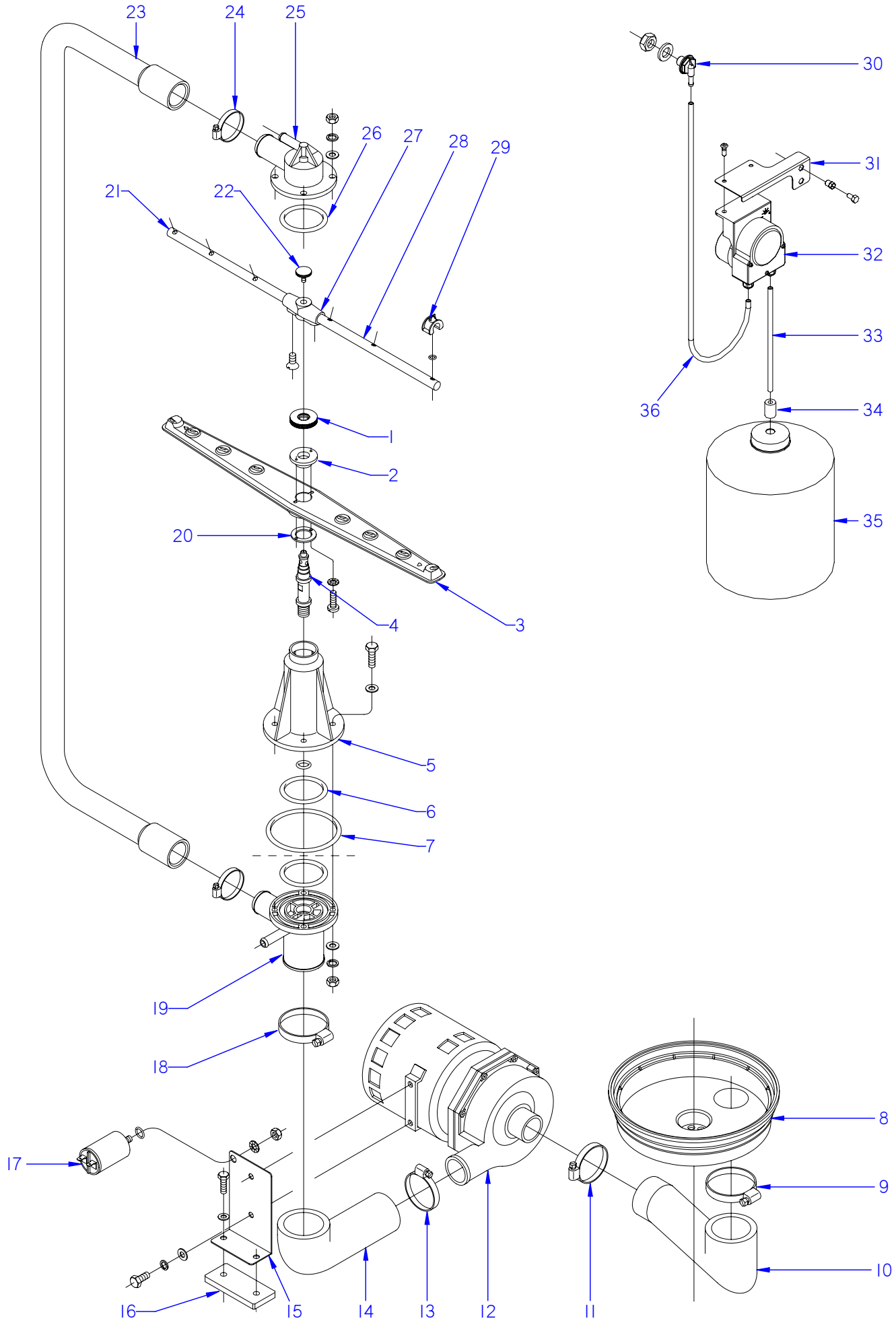

ITEM MARCADO EN COLOR = REPUESTO RECOMENDADO
COLOURED ITEM = RECOMMENDED SPARE PART

Nº plano / N º plane	Firma	Fecha / Date	Denominación / Denomination: FUNCIONAL LAVADO / WASH FUNCTIONAL	Lamina / Sheet	
C-2839		2011-07	LAVAVAJILLAS AD-48 W	3	Fagor Industrial S.Coop. FAGOR Oñate

MOD.	LAVAVAJILLAS / DISWASHER	ZONA / ZONE	PARTE FUNCIONAL LAVADO WASH FUNCTIONAL PART	PLANO DIAGRAM	C-2839

ITEM	CODIGO CODE	DENOMINACION	NAME	AD-48 W								ELIMINADO ELIMINATED	INTRODUCID. INTRODUCED	NOTAS
1	Z200705000	TUERCA ESPECIAL M.14X1	SPECIAL NUT M.14X1	2										
2	Z650704000	ENGANCHE DISTRIBUIDOR	DISTRIBUTOR CATCH	2								11.02.13		
2	12045103	ENGANCHE DISTRIBUIDOR	DISTRIBUTOR CATCH	2									11.02.13	
3	Z650716000	DISTRIBUIDOR MONTADO	DISTRIBUTOR	2										
4	Z200704000	EJE CENTRAL	CENTRAL SHAFT	2										
5	Z200701000	SOPORTE DISTRIBUID. INFERIOR	LOWER DISTRIB. SUPPORT	1										
	Q307050000	JUNTA TOR.13.94X19.18X2.6	O-RING 13.94X19.18X2.6	1										
	Q012046000	TORNIL. EXAGONAL M6X40 A.304	HEXAGONAL BOLT M6X40 A.304	4										
	Q306050000	ARANDELA Ø6X12X1.5	WASHER Ø6X12X1.5	4										
6	Q307052000	JUNTA TOR.50.17X60.83X5.3	O-RING 50.17X60.83X5.3	2										
7	Q307049000	JUNTA TOR.85.09X95.75X5.3	O-RING 85.09X95.75X5.3	1										
8	Z200906000	CUBETA	TRAY	1										
9	Q881324000	ABRAZADERA 50-70L	CLAMP 50-70L	1										
10	Z200904000	CODO ASPIRACION 1003018	EXTRACTOR ELBOW	1										
11	Q881324000	ABRAZADERA 50-70L	CLAMP 50-70L	1										
12	Z203511000	BOMBA DE LAVADO 60 HZ.	WASH PUMP 60 HZ.	1										
	Z201083000	TURBINA 60 HZ.78 MM	TURBINE 60 HZ.78 MM	1										
	Z201081000	CONJUNTO JUNTA Y RETEN	JOINT BOARD AND SEAL	1										
13	Q881307000	ABRAZADERA 40-60	CLAMP 40-60	1										
14	Z200905000	CODO IMPULSION 1003017	IMPULSE ELBOW 1003017	1										
15	Z201002000	SOPORTE MOTOBO.F-3-4-5-6	MOTOR PUMP SUPPORT	1										
	Q012041000	TORNIL. EXAGONAL M6X10 A.304	HEX BOLT M6X10 A.304	2										
	Q232040000	ARANDELA A6	FAN WASHER A6	2										
	Q262040000	ARANDELA GROW. A6 A.304	WASHER GROW. A6 A.304	2										
16	Z201003000	BASE BOMBA LAVADO 1003016	WASH PUMP BASE	1										
	Q012033000	TORNIL. EXAGONAL M5X20 A.304	HEX BOLT M5X20 A.304	2										
	Q232030000	ARANDELA A5	FAN WASHER A5	2										
17	V321300000	CONDENSADOR 10 M.F.	CONDENSER 10 M.F.	1										
	Q307048000	JUNTA TORICA 9.12X16.18X3.53	O-RING 9.12X16.18X3.53	1										
	Q162050000	TUERCA EXAGONAL M8x1 INOX.	HEXAGONAL NUT M8x1 INOX.	1										
	Q261050000	ARANDELA MUELLE A8	SPRING WASHER A8	1										

MOD.	LAVAVAJILLAS / DISWASHER	ZONA / ZONE	PARTE FUNCIONAL LAVADO WASH FUNCTIONAL PART	PLANO DIAGRAM	C-2839

ITEM	CODIGO CODE	DENOMINACION	NAME	AD-48 W								ELIMINADO ELIMINATED	INTRODUCID. INTRODUCED	NOTAS
19	Z200703000	PASAMUROS	WALL BUSHING	1										
	Q232040000	ARANDELA A6	WASHER A6	4										
	Q262040000	ARANDELA GROW. A6 A.304	WASHER GROW. A6 A.304	4										
	Q162040000	TUERCA EXAGONAL M6	HEXAGONAL NUT M6	4										
20	Z650711000	AMARRE ENGANCHE DISTRIBUID.	DISTRIBUT. CATCH FASTENING	2										
	Q152015000	TORNILLO ALOMADO M3X6	CURVED SCREW M3X6	4										
	Q242010000	ARANDELA ABANICO A.3 A304	FAN WASHER A.3 A304	4										
21	Z201902000	RAMA DE ACLARADO IZQUIERDA	LEF TRINSE BRANCH	2										
22	Q152016000	TORNILLO ESPECIAL M.5X0.8	SPECIAL BOLT M.5X0.8	2										
23	Z200706000	ARBOL DE LAVADO	WASH CAM	1										
24	Q881305000	ABRAZADERA 25-40	CLAMP 25-40	2										
25	Z200707000	SOPORTE DISTRIBUIDOR SUPER.	UPPER DISTRIB. SUPPORT	1										
	Q232040000	ARANDELA A6	WASHER A6	4										
	Q262040000	ARANDELA GROW. A6 A.304	WASHER GROW. A6 A.304	4										
	Q162040000	TUERCA EXAGONAL M6	HEXAGONAL NUT M6	4										
26	Q307052000	JUNTA TOR.50.17X60.83X5.3	O-RING 50.17X60.83X5.3	1										
27	Z201903000	SOPORTE RAMAS ACLARADO	TRINSE BRANCH SUPPORT	2										
	Q042021000	TORN. AVELLANADO M4X10 A.304	COUNTERSUNK BOLT M4X10 A30	4										
28	Z201901000	RAMA DE ACLARADO DERECHA	RIGHT TRINSE BRANCH	2										
29	Z211903000	TOBERA ACLARADO	RINSE NOZZLE	12										
30	Z208927000	PASAMUROS DETERGENTE INOX	DETERGENT WALL BUSHING	1										
31	Z208434000	SOPORTE DOSIFICADOR W	DOSEFOR W SUPPORT	1										
	Q411304000	REMACHE AVIBULB Ø4,8	AVIBULB Ø4,8 RIVET	2										
	Q012031000	TORNIL.EXAGONAL M5X10 A.304	HEXAGONAL BOLT M5X10	2										
32	Z208903000	DOSIFIC. DGTE REGULABLE G300	DOSEFOR DETERGENT	1										
33	Z448614000	CONDUCTO ASPIRACIÓN	CONDUIT	1										
34	Z701152000	PESO FILTRO	FILTER WEIGHT	1										
35	-	GARRAFA DETERGENTE	DETERGENT CAN	1										
36	3699300000	CONDUCTO DOSIFICAFOR TRANS.	CONDUIT	1										
S/Nº	Z208904000	CABLEADO DOSIFICADOR DTGTE	WIRE FEEDER DETERGENT	1										

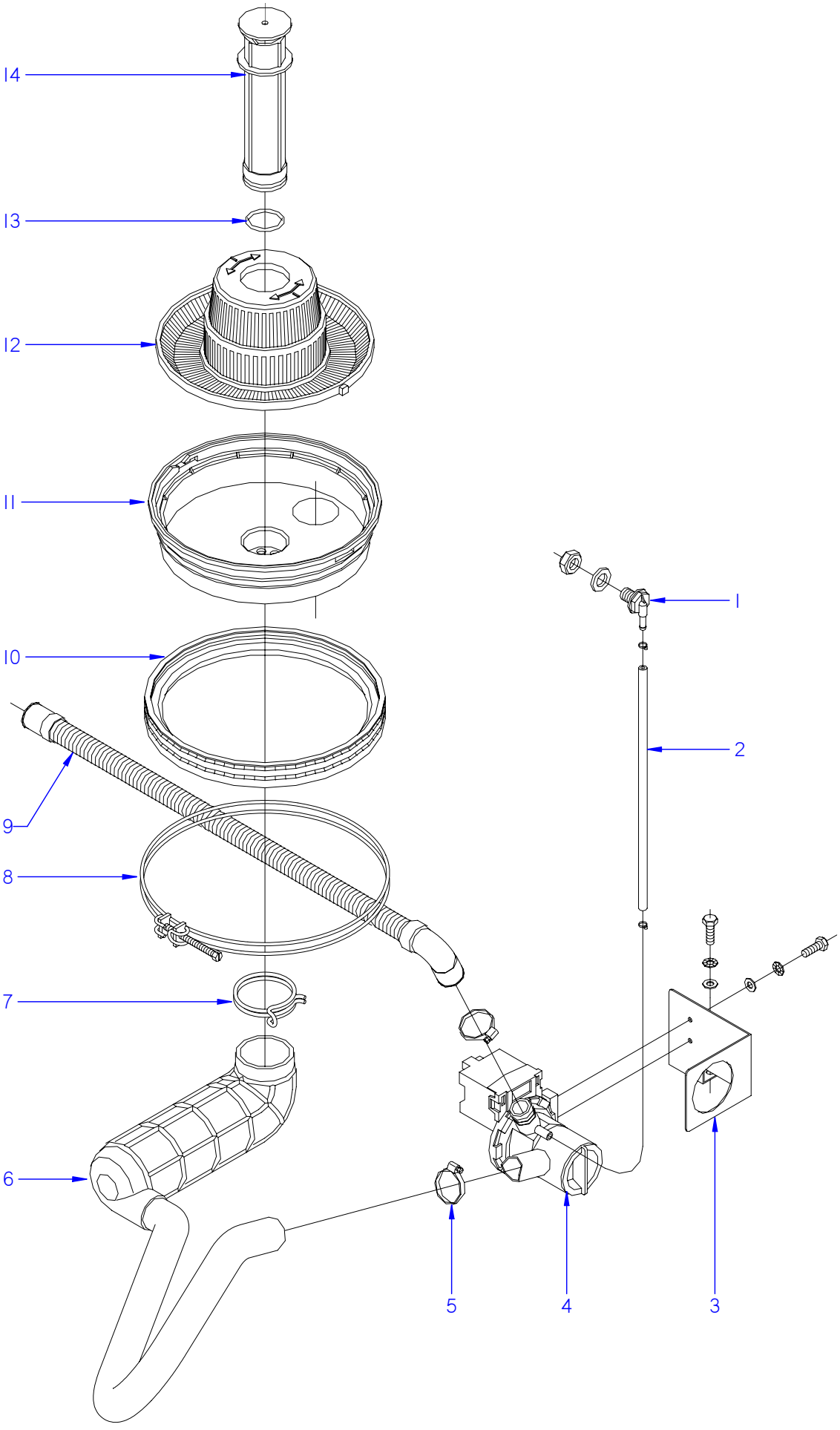

ITEM MARCADO EN COLOR = REPUESTO RECOMENDADO
COLOURED ITEM = RECOMMENDED SPARE PART

Nº plano / N º plane	Firma	Fecha / Date	Denominación / Denomination: FUNCIONAL DESAGÜE / DRAINAGE FUNCTIONAL	Lamina / Sheet	
C-2840		2011-07	LAVAVAJILLAS AD -48 W	4	Fagor Industrial S.Coop. FAGOR Oñate

MOD.	LAVAVAJILLAS / DISWASHER	ZONA / ZONE	PARTE FUNCIONAL DESAGÜE DRAINAGE FUNCTIONAL PART	PLANO DIAGRAM	C-2840

ITEM	CODIGO REFERENCE	DENOMINACION	DENOMINATION	AD-48 W								ELIMINADO ELIMINATED	INTRODUCID. INTRODUCED	NOTAS
1	Z230905000	PASAMUROS DETERGENTE	INOX DETERGENT WALL BUSHIN	1										
	Q306024000	JUNTA Ø18X12.5X1.5	SEAL 18X12.5X1.5	1								25.06.12		
	12010191	JUNTA 14X24X3	SEAL 14X24X3	1									25.06.12	
	Q162070000	TUERCA EXAGONAL M12	HEXAGONAL NUT M12	1										
2	3702400000	TUBO GOMA NEGRO Ø 8*4	BLACK RUBBER PIPE Ø 8*4	1										
	P102154000	BRIDA ELASTICA TUBO	ELASTIC PIPE FLANGE	2										
3	Z220904000	SOPORTE BOMBA DESAGUE	DRAINAGE PUMP SUPPORT	1										
	Q012031000	TORNIL.EXAGONAL M5X10 A.304	HEXAGONAL BOLT M5x10	4										
	Q242030000	ARAND.ABAN. A5 A.304	FAN WASHER A5 A.304	4										
	Q232030000	ARANDELA A5	WASHER A5	4										
	Q232040000	ARANDELA A6	WASHER A6	2										
4	Z223501000	BOMBA DESAGUE 30W 60HZ	DRAINAGE PUMP 30W 60HZ	1										
5	Q881305000	ABRAZADERA 25-40	CLAMP 25-40	2										
6	Z220902000	ACUMULADOR 1503019	ACCUMULATOR 1503019	1										
7	Q901308000	ABRAZAD. ELAST. 56-58.8	ELASTIC CLAMP 56-58.8	1										
8	Z200908000	ABRAZADERA CUBETA COMPL.	TRAY CLAMP	1										
9	Z220903000	MANGUERA DESAGUE	DRAINAGE HOSE	1										
10	Z200907000	JUNTA CUBETA	TRAY SEAL	1										
11	Z200906000	CUBETA	TRAY	1										
12	Z200922000	CONJUNTO FILTRO AF.	FILTER	1										
13	Q307051000	JUNTA TOR.36.17X41.41X2.6	O-RING 36.17X41.41X2.6	1										
14	Z200909000	ALIVIADERO	OVERFLOW	1								24.06.13		
14	12049258	ALIVIADERO AF MODELO B	OVERFLOW AF MOD. B	1									24.06.13	

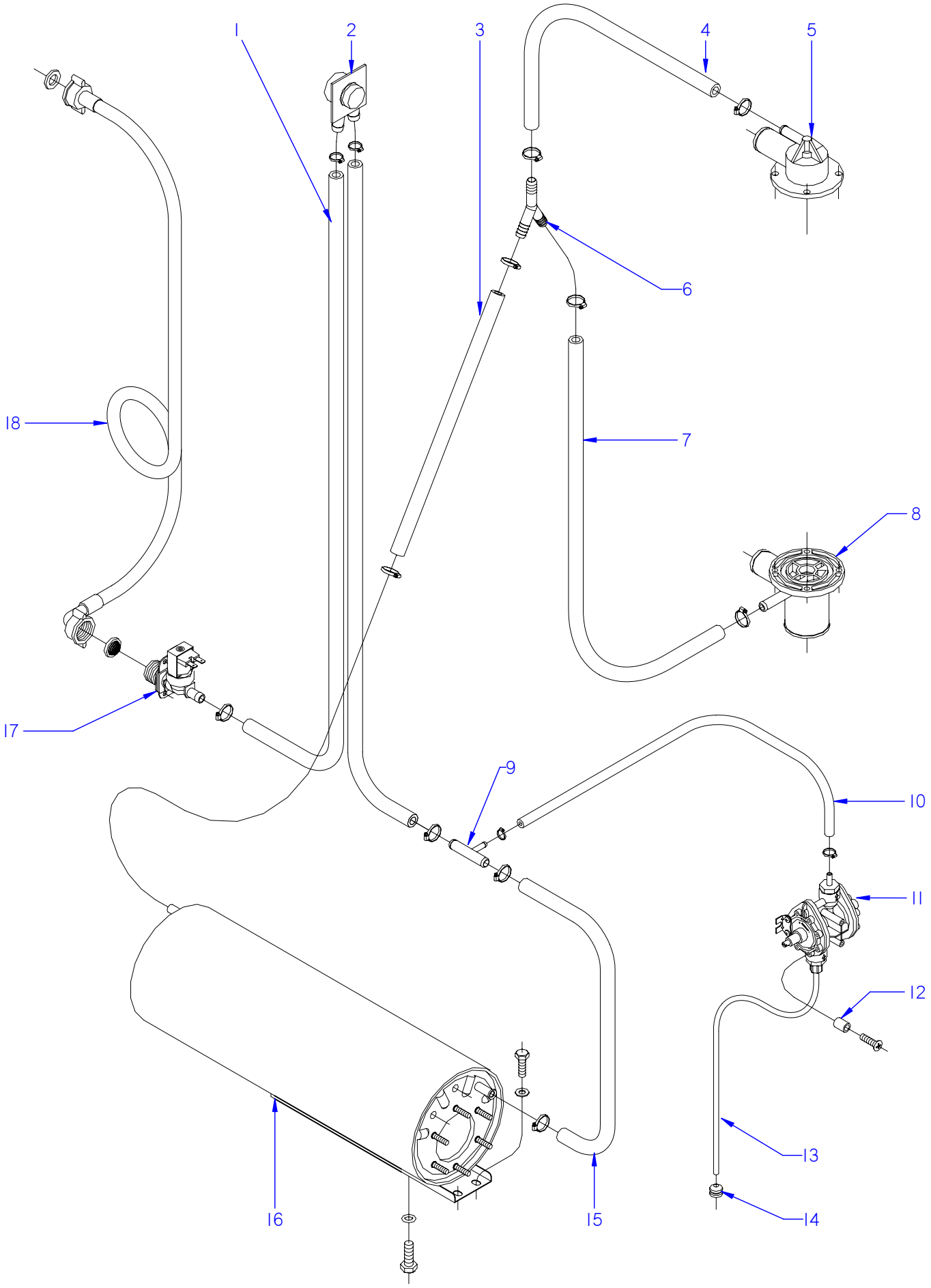

ITEM MARCADO EN COLOR = REPUESTO RECOMENDADO
COLOURED ITEM = RECOMMENDED SPARE PART

Nº plano / N º plane	Firma	Fecha / Date	Denominación / Denomination: FUNCIONAL ACLARADO / RINSE FUNCTIONAL	Lamina / Sheet	
C-2841		2011-07	LAVAVAJILLAS AD-48 W	5	Fagor Industrial S.Coop. FAGOR Oñate

MOD.	LAVAVAJILLAS / DISWASHER	ZONA / ZONE	PARTE FUNCIONAL ACLARADO RINSE FUNCTIONAL PART	PLANO DIAGRAM	C-2841

ITEM	CODIGO REFERENCE	DENOMINACION	DENOMINATION	AD-48 W								ELIMINADO ELIMINATED	INTRODUCID. INTRODUCED	NOTAS
1	3676900000	TUBO GOMA NEGRA Ø 17*10	BLACK RUBBER PIPE Ø17*10	2										
	Q881302000	ABRAZADERA 12-20	CLAMP 12/20	4										
2	Z231106000	VALVULA ANTIRRETORNO	NON-RETURN VALVE	1										
	Q881302000	ABRAZADERA 12/20	CLAMP 12/20	2										
3	3676900000	TUBO GOMA NEGRA Ø 17*10	BLACK RUBBER PIPE Ø17*10	1										
	Q881302000	ABRAZADERA 12-20	CLAMP 12/20	2										
4	3676900000	TUBO GOMA NEGRA Ø 17*10	BLACK RUBBER PIPE Ø17*10	1										
	Q881302000	ABRAZADERA 12-20	CLAMP 12/20	2										
5	Z200707000	SOPORTE DISTRIB. SUPERIOR	UPPER DISTRIB. SUPPORT	1										
6	Z201106000	RACORD EN Y	Y CONNECTION	1										
7	3676900000	TUBO GOMA NEGRA Ø 17*10	BLACK RUBBER PIPE Ø17*10	1										
	Q881302000	ABRAZADERA 12-20	CLAMP 12/20	1										
8	Z200703000	PASAMUROS	WALL BUSHING	1										
	Q881302000	ABRAZADERA 12-20	CLAMP 12/20	1										
9	Z601157000	TOMA PRESION	PRESSURE INTAKE	1										
10	3704000000	TUBO GOMA NEGRO Ø 10,5*5	BLACK RUBBER PIPE Ø 10,5*5	1										
	Q881308000	ABRAZADERA 8-14L	CLAMP 8-14L	2										
11	Z211109000	DOSIFICADOR TENSOACTIVO N-6	SURFACE ACT. DISP. N-6	1								18.06.12		
11	12045206	DOSIFICADOR_ABRILLANTADOR_A	RINSE AID DISPENSER	1									18.06.12	
12	Z203007000	CASQUILLO	CASE	2										
13	Z448618000	CONDUCTO ABRILLANTADOR	POLISH DUCT	1										
14	Z701152000	PESO FILTRO	FILTER WEIGHT	1										
15	3676900000	TUBO GOMA NEGRA Ø 17*10	BLACK RUBBER PIPE Ø17*10	1										
	Q881302000	ABRAZADERA 12-20	CLAMP 12/20	2										
16	12022943	CALDERIN COMPLETO	COMPL. BOILER	1										
	Q012063000	TORNIL. EXAGONAL M10x20 A.304	HEXAGONAL BOLT M10x20 A304	1										
	Q307048000	JUNTA TORICA Ø9.12X16.18X3.53	O-RING Ø9.12X16.18X3.53	1										
	Q012031000	TORNIL. EXAGONAL M5x10 A.304	HEXAGONAL BOLT M5x10 A.304	2										
	Q232030000	ARANDELA A5	WASHER A5	2										
17	Z701135000	ELECTR. SIMP.220V COD.255.208	SIMPLE SOLENOID VALVE	1										
18	Z602121000	MANGUERA ENTRADA AGUA	WATER INTAKE HOSE	1										

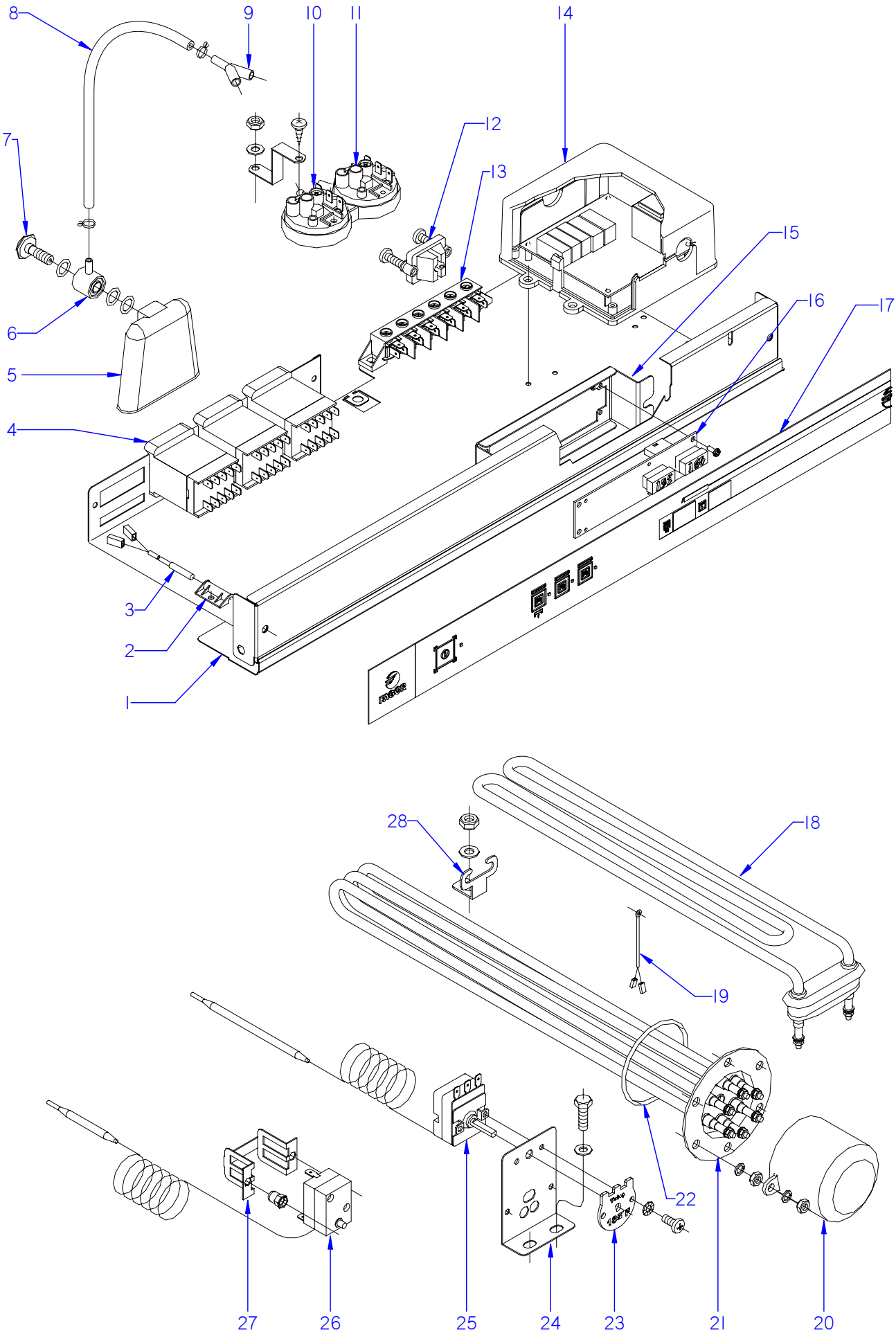

ITEM MARCADO EN COLOR = REPUESTO RECOMENDADO
COLOURED ITEM = RECOMMENDED SPARE PART

Nº plano / N º plane	Firma	Fecha / Date	Denominación / Denomination: FUNCIONAL ELECTRICA / ELECTRICS FUNCTIONAL	Lamina / Sheet	
C-2842		2011-07	LAVAVAJILLAS AD-48 W	6	Fagor Industrial S.Coop. FAGOR Oñate

MOD.	LAVAVAJILLAS / DISWASHER	ZONA / ZONE	PARTE FUNCIONAL ELECTRICA ELECTRICS FUNCTIONAL PART	PLANO DIAGRAM	C-2842

ITEM	CODIGO REFERENCE	DENOMINACION	DENOMINATION	AD-48 W								ELIMINADO ELIMINATED	INTRODUCID. INTRODUCED	NOTAS
1	Z218431000	FRENTE COMPLETO AD CW	COMPLETE FRONT AD CW	1								19.10.11		
1	12041131	FRENTE EXTRA. COMP. AD-AF-W	COMPLETE FRONT AD-AF-W	1								06.06.12		
1	12045383	FRENTE COMPLETO AD CW	COMPLETE FRONT AD CW	1									06.06.12	
2	Z203010000	AMARRE INTERRUP. MAGNETICO	MAGNETIC SWITCH FASTENER	1										
	Q232030000	ARANDELA A5	WASHER A5	1										
	Q152004000	TORNILLO APLASTADO M5x13 A30	FLAT HEADED BOLT M5x13 A304	1										
	Q162030000	TUERCA EXAGONAL M5	HEXAGONAL NUT M5	1										
3	Z203009000	INTERRUPTOR MAGNETICO	MAGNETIC SWITCH	1										
4	Z213007000	CONTACTOR 230 V. 50-60 HZ	CONTACTOR 230 V. 50-60 HZ	3										
5	Z203011000	CAMARA PRESOSTATO	PRESSURE SWITCH	1										
6	Z203012000	EMPALME PRESOSTATO	PRESSURE SWITCH CONNEX	1										
7	Z203013000	TORNILLO PRESOSTATO	PRESSURE SWITCH BOLT	1										
	Q307003000	JUNTA TORICA 16.01X10.77X2.62	O-RING 16.01X10.77X2.62	3										
8	3702400000	TUBO GOMA NEGRO D 8*4	BLACK RUBBER PIPE Ø 8*4	1										
	P102154000	BRIDA ELASTICA TUBO	ELASTIC PIPE FLANGE	2										
9	Z103077000	RACORD EN Y	Y CONNECTION	1										
10	Z203023000	PRESOSTATO SIMPLE PVS	SIMPLE PRESSURE SWITCH	1										
11	Z223005000	PRESOSTATO SIMPLE P.V.S.	SIMPLE PRESSURE SWITCH	1										
S/Nº	Z602923000	SOPORTE PRESOSTATO	PRESSURE SUPPORT	1										
	Q082032000	TORNILLO ALOMADO BZ-3,5X9,5	ALOM. BOLT BZ-3,5X9,5	1										
	Q152004000	TORNILLO APLASTADO M5x13 A30	FLAT HEADED BOLT M5x13 A304	1										
	Q162030000	TUERCA EXAGONAL M5	HEXAGONAL NUT M5	1										
12	Z203020000	RETENEDOR DE CABLE	CABLE HOLDER	1										
13	R253044000	REGLETA AUXILIAR FV-122	AUXILIARY STRIP FV-122	1										
	Z213005000	ROTULO ADHESIVO	ADHES. LABEL	1										
	Q152004000	TORNILLO APLASTADO M5x13	FLAT HEADED BOLT M5x13 A304	2										
	Q162030000	TUERCA EXAGONAL M5	HEXAGONAL NUT M5	2										
S/Nº	12045569	BORNAS PORTAFUSIB. 13A 2,5	FUSE HOLDER TERMINAL 13A	1									24.06.13	
14	Z213073000	TARJETA 5 RELES	CHAMBER 5 RELAY	1								27.01.13		
14	12048170	TARJETA 5 RELES	CHAMBER 5 RELAY	1								02.09.13		
14	12008750	TARJETA 5 RELES	CHAMBER 5 RELAY	1									02.09.13	

MOD.	LAVAVAJILLAS / DISWASHER	ZONA / ZONE	PARTE FUNCIONAL ELECTRICA ELECTRICS FUNCTIONAL PART	PLANO DIAGRAM	C-2842

ITEM	CODIGO REFERENCE	DENOMINACION	DENOMINATION	AD-48 W								ELIMINADO ELIMINATED	INTRODUCID. INTRODUCED	NOTAS
15	Z218432000	SOPORTE DISPLAY Tª ADVANCE	DISPLAY Tª ADV. SUPPORT	1										
	Q262030000	ARANDELA GROW. A5 A.304	WASHER GROW. A5 A.304	2										
	Q162030000	TUERCA EXAGONAL M5	HEXAGONAL NUT M5	2										
	R663036000	FIJACION CIRCUITO	CIRCUIT BINDINGS	3										
16	Z218433000	DISPLAY Tª ADVANCE W	DISPLAY Tª ADVANCE W	1										
17	Z218429000	EMBELLECED. ADHESIVO AD-64 CV	ADHES. TRIM AD-64 CW	1										
18	Z203601000	RESISTENCIA TANQUE	TANK RESISTOR	1										
19	Z268004000	SONDA TEMPERATURA GICAR	TEMPERATURA PROBE GICAR	1								19.10.11		
19	Z713028000	CONJUNTO SONDA 64KOhmio NTC	64KOhmio NTC PROBE SET	1									19.10.11	
20	Z101723000	CAPERUZA RESISTENC. CALDERIN	BOILER RESIST. CAP	1										
	Q163140000	TUERCA EXAGONAL M6 LATON	HEXAGONAL NUT M6 BRASS	2										
	Q242030000	ARANDELA ABANICO A5 A.304	FAN WASHER A5 A.304	2										
	Q152004000	TORNILLO APLASTADO M5x13 A30	FLAT HEADED BOLT M5x13 A304	2										
21	Z201720000	RESISTENCIA CALDERIN W	BOILER RESISTOR W	1										
	Q221305000	TUERCA EXAGONAL M4 ZINCADA	HEXAGONAL NUT M4 ZIN.	2										
	Q163140000	TUERCA EXAGONAL M6 LATON	HEXAGONAL NUT M6 BRASS	5										
22	Q307035000	JUNTA TORICA AN-36 282333	"O" RING AN-36 282333	1										
23	Z718446000	CHAPA W 85ºC	W 85ºC PLATE	1								19.10.11		
24	Z203047000	SOPORTE TERMOSTATOS	THERMOSTAT SUPPORT	1										
	Q012031000	TORNIL. EXAGONAL M5X10 A.304	HEXAGONAL BOLT M5X10	2										
	Q232030000	ARANDELA A5	HEXAGONAL NUT M5	2										
25	Z203014000	TERMOSTATO CALDERIN	WASH DRUM THERMOSTAT	2								19.10.11		
25	12040858	TERMOSTATO 16A 85°C 6 801V UL	TERMOSTAT 16A 85°C 6 801V UL	1									19.10.11	
26	Z213014000	LIMITADOR TECASA P.	TECASA P. LIMITER	1										
27	Z203060000	AMARRE LIMITADOR TECASA	LIMITER FASTENING	1										
	Q221341000	REMACHE EXAGONAL M4	HEXAGONAL RIVET M4	2										
	Q152024000	TORNIL. AVELLANADO M4X8 A304	COUNTERSUNK BOLT M4x8	2										
28	Z603602000	SOPORTE RESISTENCIA TANQUE	TANK RESISTOR SUPPORT	1										
	Q232040000	ARANDELA A6	WASHER A6	1										
	Q162040000	TUERCA EXAGONAL M6	HEXAGONAL NUT M6	1										
S/Nº	12043911	REGULADOR Tª W AF 167ºF	REGULATOR Tª W AF 167ºF	1									29.02.12	

MOD.	LAVAVAJILLAS / DISWASHER	ZONA / ZONE	VARIOS / MISCELLANEOUS	PLANO DIAGRAM	

ITEM	CODIGO REFERENCE	DENOMINACION	DENOMINATION	AD-48 W								ELIMINADO ELIMINATED	INTRODUCID. INTRODUCED	NOTAS
	Z218435000	FOLLETO INSTRUCCIONES AD W	INSTRUCTION LEAFLET. AD W	1										
	Z213075000	ESQUEMA TEORICO AD-48; 64	THEORETICAL DIAGRAM AD-48;6	1										PLANO HC-18518
	Z203089000	PLANO DE MONTAJE A.F. AD	ASSEMBLY DIAGRAM A.F. AD	1										PLANO HC-18210
	Z213064000	INSTALACION ELECTRICA AD-48	ELEC. INSTALATION AD-48	1								19.10.11		
	12991850	INSTALACION ELECTRICA UL	ELEC. INSTALATION UL	1									19.10.11	
	12010421	CABLE CONEXION DISPLAY W	DISPLAY CONNECTI. WIRING W	1										
	12023974	CABLE ALIMENTACION USA	SUPPLY CABLE USA	1										
	12024314	CABL. CONEXIÓN SONDAS GICAR	GICAR CONNECTION WIRING	1								19.10.11		
	12023672	CABLE CONEXION PLACA-DISPLAY	DISPLAY CONNECTI. WIRING	1										

AD 72, AD 72 W, AD 64, AD 64 B, AD 64 B BT, AD 64 B DD, AD 64 C, AD 64 CW, AD 64 D, AD 64 DD, AD 64 HY, AD 45 B BT

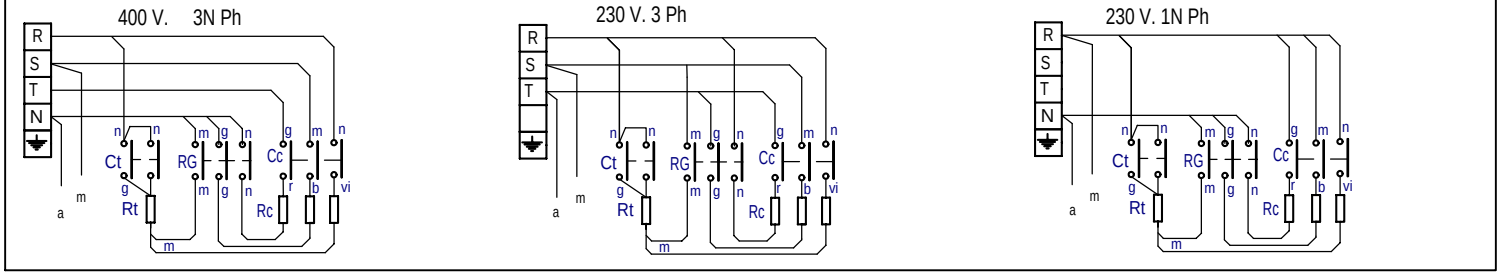

AD 48, AD 48 B, AD 48 B DD, AD 48 C, AD 48 D, AD 48 DD, AD 48 HY, AD 48 W, FR 48 E HY

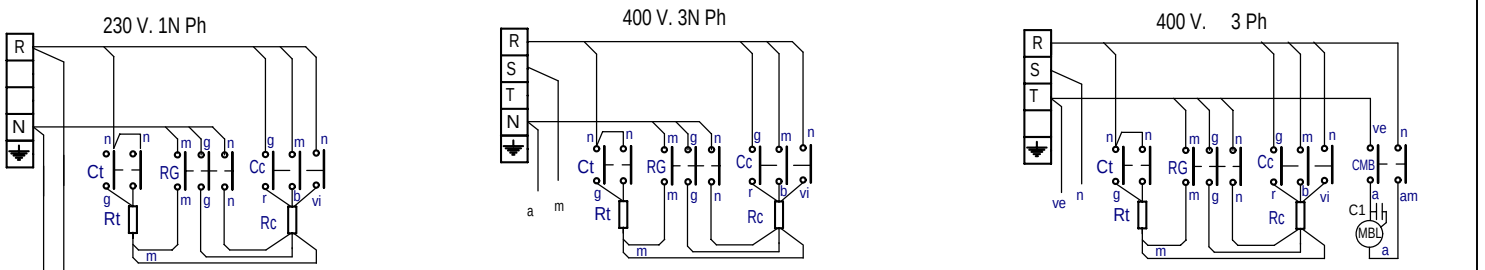

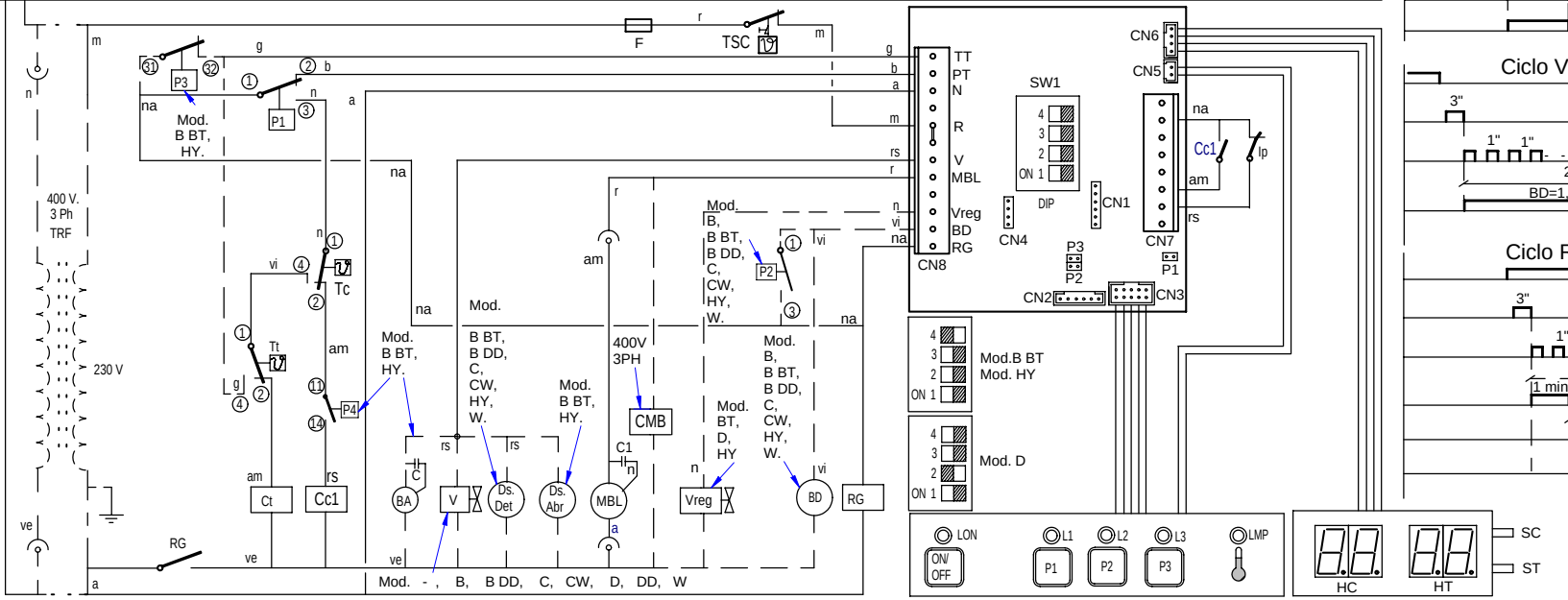

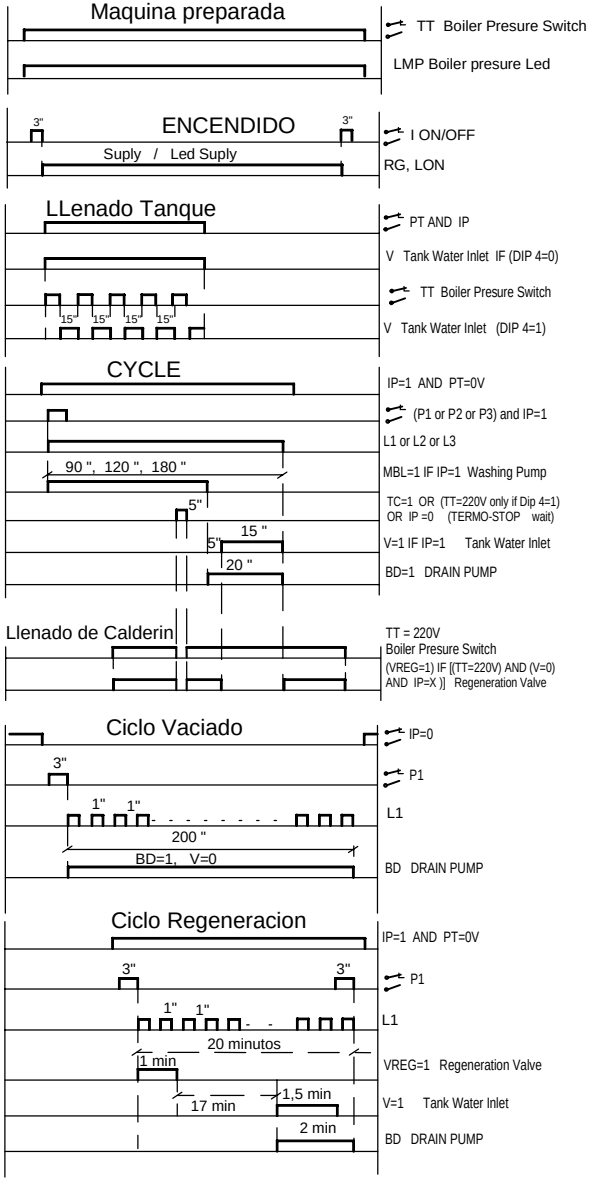

Z213075000

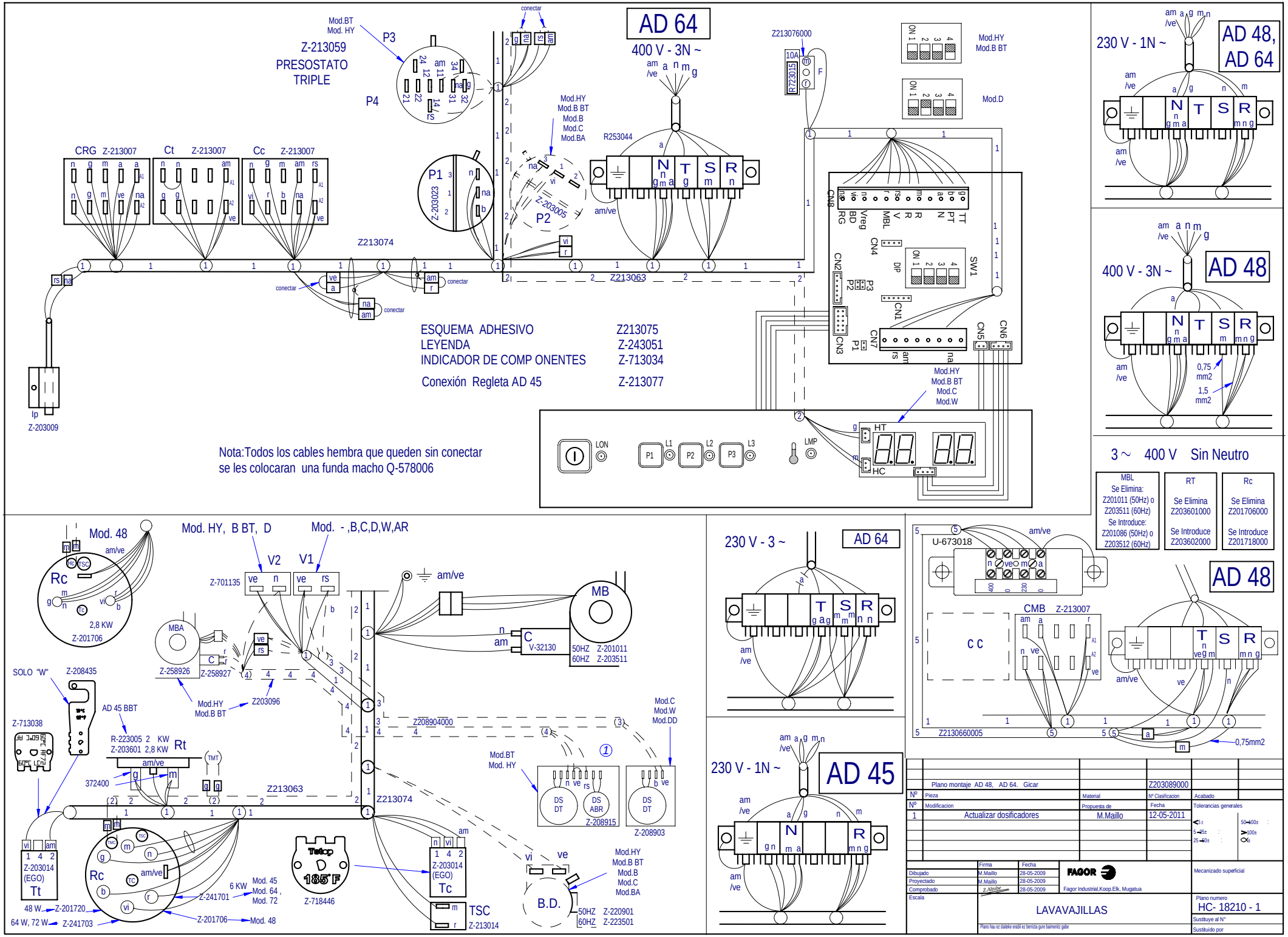
AD 64
400 V - 3N ~
Z-213059
PRESOSTATO
TRIPLE
Mod.BT
Mod. HY
P3
P4
CRG Z-213007
Ct Z-213007
Cc Z-213007
P1
Z-203023
P2
Z-203005
Z213074
Z213063
Z213076000
R253044
Mod.HY
Mod.B BT
Mod.B
Mod.C
Mod.BA
Mod.D
Mod.W
Mod.DD
CN8
CN4
CN2
CN3
CN1
CN7
CN5
CN6
SW1
DIP
ESQUEMA ADHESIVO Z213075
LEYENDA Z-243051
INDICADOR DE COMP ONENTES Z-713034
Conexión Regleta AD 45 Z-213077
Ip
Z-203009
LON
LMP
HT
HC
Nota:Todos los cables hembra que queden sin conectar
se les colocaran una funda macho Q-578006
230 V - 1N ~
AD 48,
AD 64
400 V - 3N ~
AD 48
0,75
mm2
1,5
mm2
3 ~ 400 V Sin Neutro
MBL
Se Elimina:
Z201011 (50Hz) o
Z203511 (60Hz)
Se Introduce:
Z201086 (50Hz) o
Z203512 (60Hz)
RT
Se Elimina
Z203601000
Se Introduce
Z203602000
Rc
Se Elimina
Z201706000
Se Introduce
Z201718000
Mod. 48
Rc
2,8 KW
Z-201706
Mod. HY, B BT, D
Mod. - ,B,C,D,W,AR
V2
V1
Z-701135
MBA
Z-258926
Z-258927
Mod.HY
Mod.B BT
Z203096
MB
V-32130
50HZ Z-201011
60HZ Z-203511
SOLO "W"
Z-208435
AD 45 BBT
Z-713038
R-223005 2 KW
Z-203601 2,8 KW
Rt
372400
Z213063
Z213074
Z208904000
Mod.C
Mod.W
Mod.DD
Mod.BT
Mod. HY
Z-208915
Z-208903
Z-203014
(EGO)
Tt
48 W Z-201720
64 W, 72 W Z-241703
Z-241701
6 KW
Mod. 45
Mod. 64 ,
Mod. 72
Z-201706
Mod. 48
Z-718446
Z-203014
(EGO)
Tc
TSC
Z-213014
B.D.
Mod.HY
Mod.B BT
Mod.B
Mod.C
Mod.BA
50HZ Z-220901
60HZ Z-223501
230 V - 3 ~
AD 64
230 V - 1N ~
AD 45
U-673018
CMB Z-213007
C C
Z2130660005
AD 48
0,75mm2
Plano montaje AD 48, AD 64. Gicar
Z203089000
Nº Pieza
Material
Nº Clasificacion
Acabado
Nº Modificacion
Propuesta de
Fecha
Tolerancias generales
1 Actualizar dosificadores
M.Maillo
12-05-2011
Firma
Fecha
Dibujado M.Maillo 28-05-2009
Proyectado M.Maillo 28-05-2009
Comprobado 28-05-2009
Escala
FAGOR
Fagor Industrial,Koop.Elk, Mugatua
Mecanizado superficial
LAVAVAJILLAS
Plano numero
HC- 18210 - 1
Sustituye al Nº
Sustituido por

LEYENDA APERTURA FRONTAL

	ESPAÑOL	FRANÇAIS	ENGLISH	DEUTSCH	ITALIANO
BD	Bomba desagüe	Pompe de vidange	Drain pump	Abflußpumpe	Pompa scarico
C 1/2/3	Condensador	Condensateur	Condenser	Kondensator	Condensatore
CMB	Contactor bomba lavado	Contacteur pompe lavage	Wash pump contactor	Kontaktschütz Waschpumpe	Contattore pompa lavaggio
Cc 1/2	Contactor calentamiento calderin	Contacteur chauf. surchauffeur	Boiler heating contactor	Kontaktschütz Boilerheizung	Contattore riscaldamento boiler
Ct	Contactor calentamiento tanque	Contacteur chaufage cuve	Tank heating contactor	Kontaktschütz Heizung Tank	Contattore riscaldamento serbatoio
CP	Rele puerta	Relais porte	Door relay	Türrelais	Rele porta
Ds.Det.	Dosificador detergente	Dosseur de detergent	Detergent doser	Dosierer Spülmittel	Dosatore detersivo
E.B	Electrobomba de presion	Electropompe de pression	Electric pressure pump	Elektro-Drucksteigungspumpe	Electropompa pressione
IG	Interruptor general	Interrupteur general	Main switch	Hauptschalter	Interruttore generale
IP	Micro puerta	Micro porte	Door microswitch	Mikroschalter Tür	Micro porta
L1	Piloto de encendido	Voyant funcionement	Operation light	Betriebsanzeigelampe	Spia accensione
L2	Piloto marcha	Voyant demarrage	Start light	Startanzeigelampe	Spia avvio
L3	Piloto maquina preparada	Voyant machine prêt	Light machine ready	Betriebsbereitschaftsanzeigelampe	Pilota macchina preparata
MBL	Bomba lavado	Pompe lavage	Wash pump	Waschpumpe	Pompa lavaggio
M	Motor programador	Moteur du programmateur	Motor programmer	Motor Programmiervorrichtung	Motore programmatore
M Av. R	Motor program. avance rapido	Moteur du progr.avance rapide	Motor program. rapid advance	Motor Programmiervorrich. schneller Vorlauf	Motore programmatore avanzamento rapido
M1	Micro programador marcha	Micro du programm. de marche	Micro programmer on	Motor Programmiervorrich. Betrieb	Micro programma. di funzionamento
M2	Micro programador lavado	Micro du programm. de lavage	Micro programmer wash	Motor Programmiervorrich. Waschen	Micro programmatore di lavaggio
M3	Micro programador aclarado	Micro du programm. de rinçage	Micro programmer on	Motor Programmiervorrich. Spülen	Micro programmatore di risciacquo
M4	Micro programador Termo-stop	Micro du programm. Termo-stop	Micro programmer Termo-stop	Motor Programmiervorrich. Thermo-Stop	Micro programmatore Termo-stop
M5	Micro programador avance	Micro du programm. avance	Micro programmer advance	Motor Programmiervorrich. Vorlauf	Micro programmatore avanzamento
P, P1, P5	Presostato	Pressostat	Pressure switch	Druckwächter	Pressostato
P2, P3, P4	Presostato limitador	Pressostat de securité	Hi-limit pressure switch	Begrenzer Druckwächter	Pressostato limitatore
RC	Resistencia calderin	Resistance surchauffeur	Boiler heating element	Heizwiderstand Boiler	Resistenza boiler
RT	Resistencia tanque	Resistance cuve	Tank heater	Heizwiderstand Tank	Resistenza serbatoio
Tt	Termostato tanque	Thermostat de cuve	Tank thermostat	Thermostat Tank	Termostato serbatoio
TC	Termostato calderin	Thermostat surchauffeur	Boiler thermostat	Thermostat kessel	Termostato boiler
TSC	Limitador calderin	Limiteur surchauffeur	Boiler Hi-limit	Begrenzer Boiler	Limitatore boiler
TSTP	Termostato termo-stop	Thermostat Termo-stop	Termo-stop Thermostat	Thermostat Termo-stop	Termostato Termo-stop
V	Electrovalvula llenado y aclarado	Electrovan. remplissage rinçage	Fill and rinse valve	Elektroventil Füllen und Spülen	Elettroval. riempimento e risciacquo
COLOR	COLORES	COULEURS	COLOUR	FARBEN	COLORE
a =	Azul	Bleu	Blue	Blau	Blu
am =	Amarillo	Jaune	Yellow	Gelb	Giallo
am/ve =	Amarillo/verde	Jaune / vert	Yellow / green	Gelb/grün	Giallo/verde
b =	Blanco	Blanc	White	Weiß	Bianco
g =	Gris	Gris	Grey	Grau	Grigio
m =	Marrón	Marron	Brown	Braun	Marrone
n =	Negro	Noir	Black	Schwarz	Nero
na =	Naranja	Orange	Orange	Orange	Arancio
r =	Rojo	Rouge	Red	Rot	Rosso
rs =	Rosa	Rose	Pink	Rosa	Roseo
ve =	Verde	Vert	Green	Grün	Verde
vi =	Violeta	Violet	Purple	Violett	Viola

Z243051000