Catalogue pieces detachées
LP8 - ed. 2000

1 - LAVAGE INFERIEUR
2 - LAVAGE SUPERIEUR
3 - CUVE LAVAGE
4 - COMPOSANTS RINÇAGE
5 - BOILER
6 - TABLEAU ELECTRIQUE
7 - PORTE
8 - PORTE
9 - GLISSIERE ET FILTRES
10 - SOCLE
11 - CARROSSERIE CAPOTTE
12 - CARROSSERIE CAPOTTE

lamber	LAVAGGIO INFERIORE - LAVAGE INFERIEUR LOWER WASHING - UNTERER WASCHROHR	MOD. **LP6-LP8**	TAV. **1 B** ED. 09/00

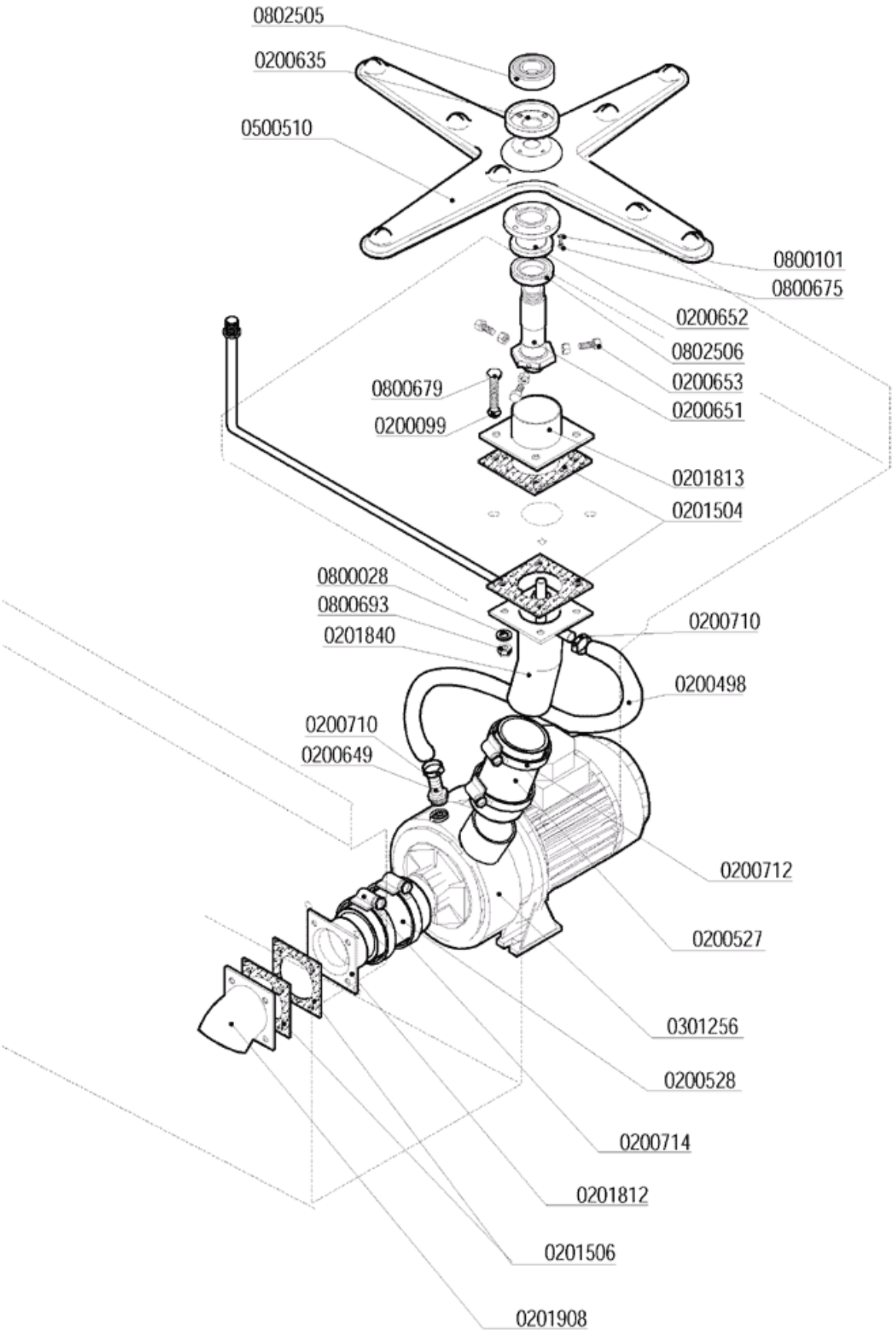

lamber	LAVAGGIO SUPERIORE - LAVAGE SUPERIEUR UPPER WASHING - OBERER WASCHROHR	MOD. **LP6-LP8**	TAV. **2 B** ED. 09/00

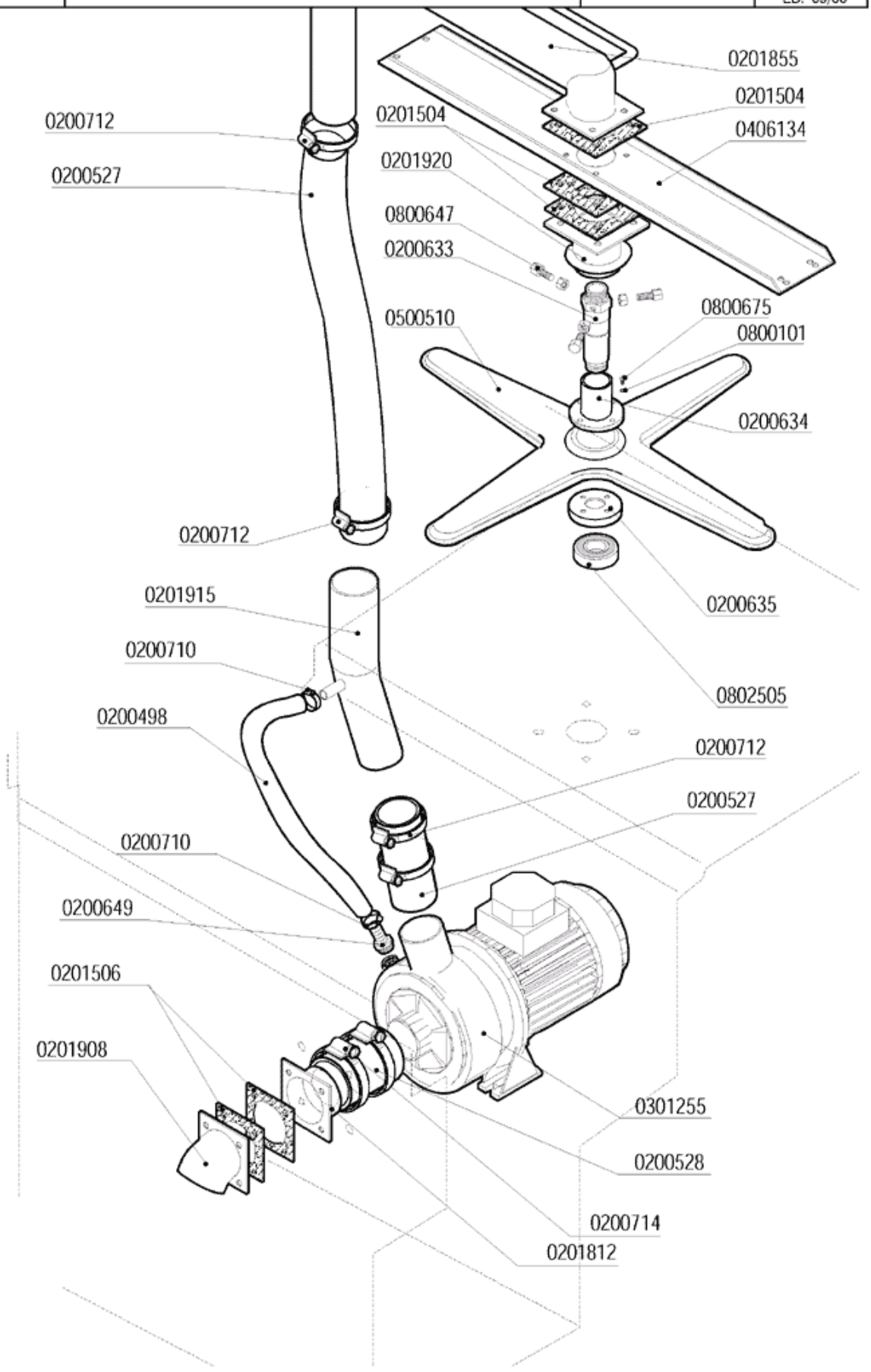

lamber	VASCA LAVAGGIO - CUVE LAVAGE WASH TANK - WASCHTANKROHR	MOD. **LP6-LP8**	TAV. **3 B** ED. 09/00

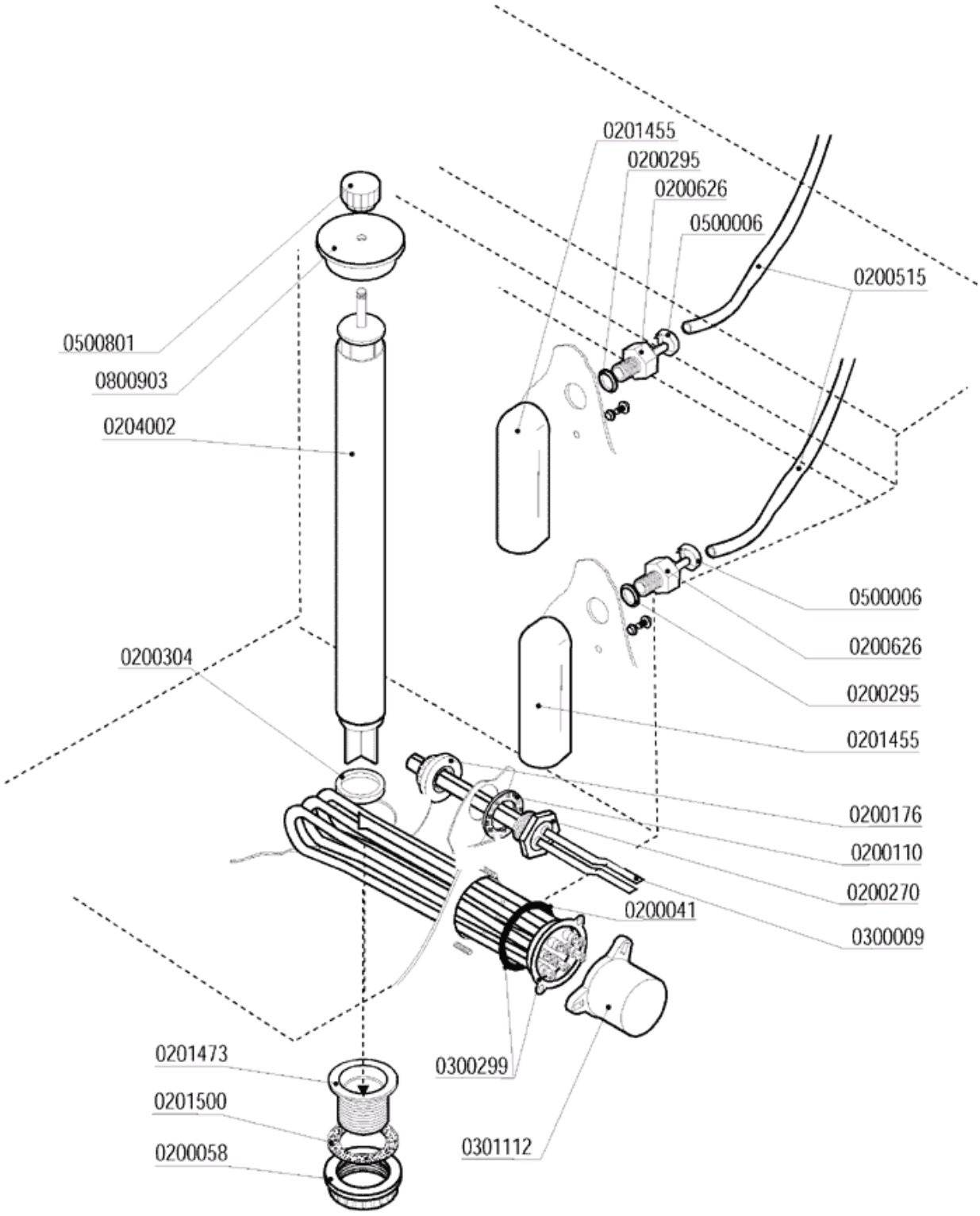

lamber	GRUPPO RISCIACQUO - COMPOSANTS RINCAGE RINSE COMPONENTS - NACHSPÜLROHR	MOD. LP6-LP8	TAV. 4 B ED.09/00

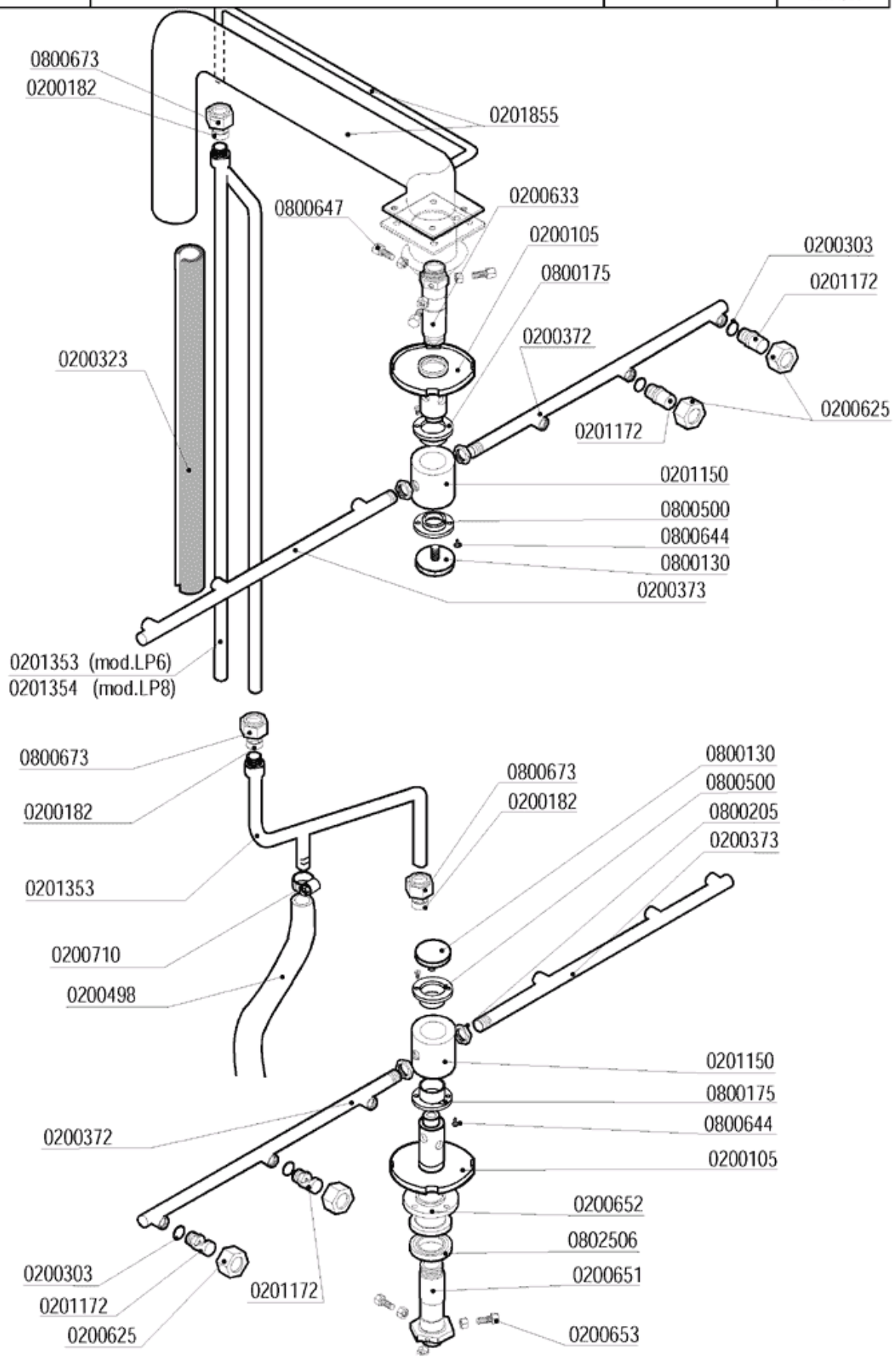

lamber	GRUPPO BOILER DISTRIBUZIONE ACQUA SURCHAUFFEUR - BOILER - BOILER	MOD. **LP6-LP8**	TAV. **5 B** ED. 09/00

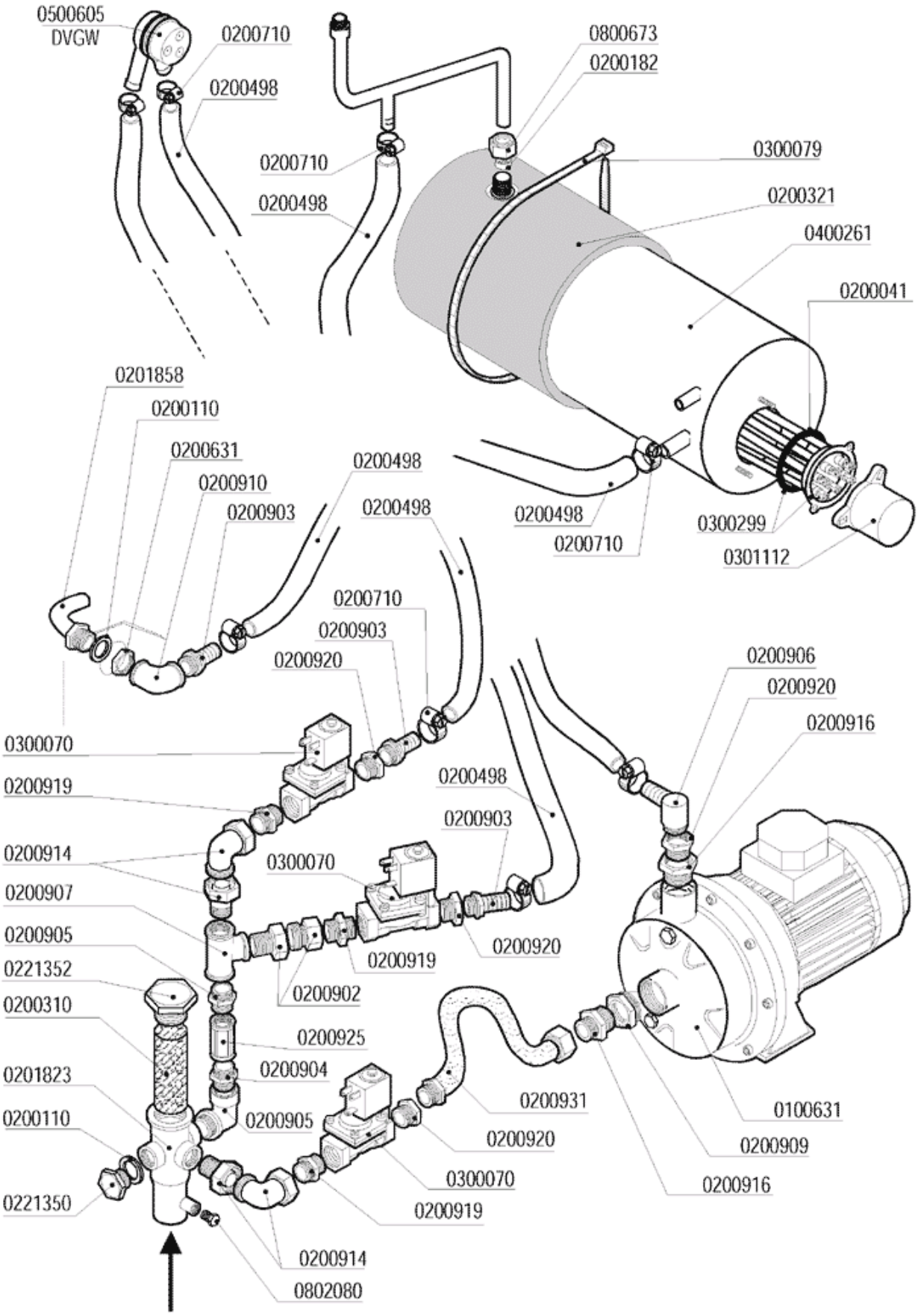

lamber

QUADRO ELETTRICO - TABLEAU ELECTRIQUE
CONTROL BOX - ELEKTRO SCHALTTAFEL

MOD.
LP6-LP8

TAV.
6 B
ED. 09/00

lamber	SPORTELLO - PORTE DOOR - TÜR	MOD. **LP6**	TAV. **7 B** ED. 09/00

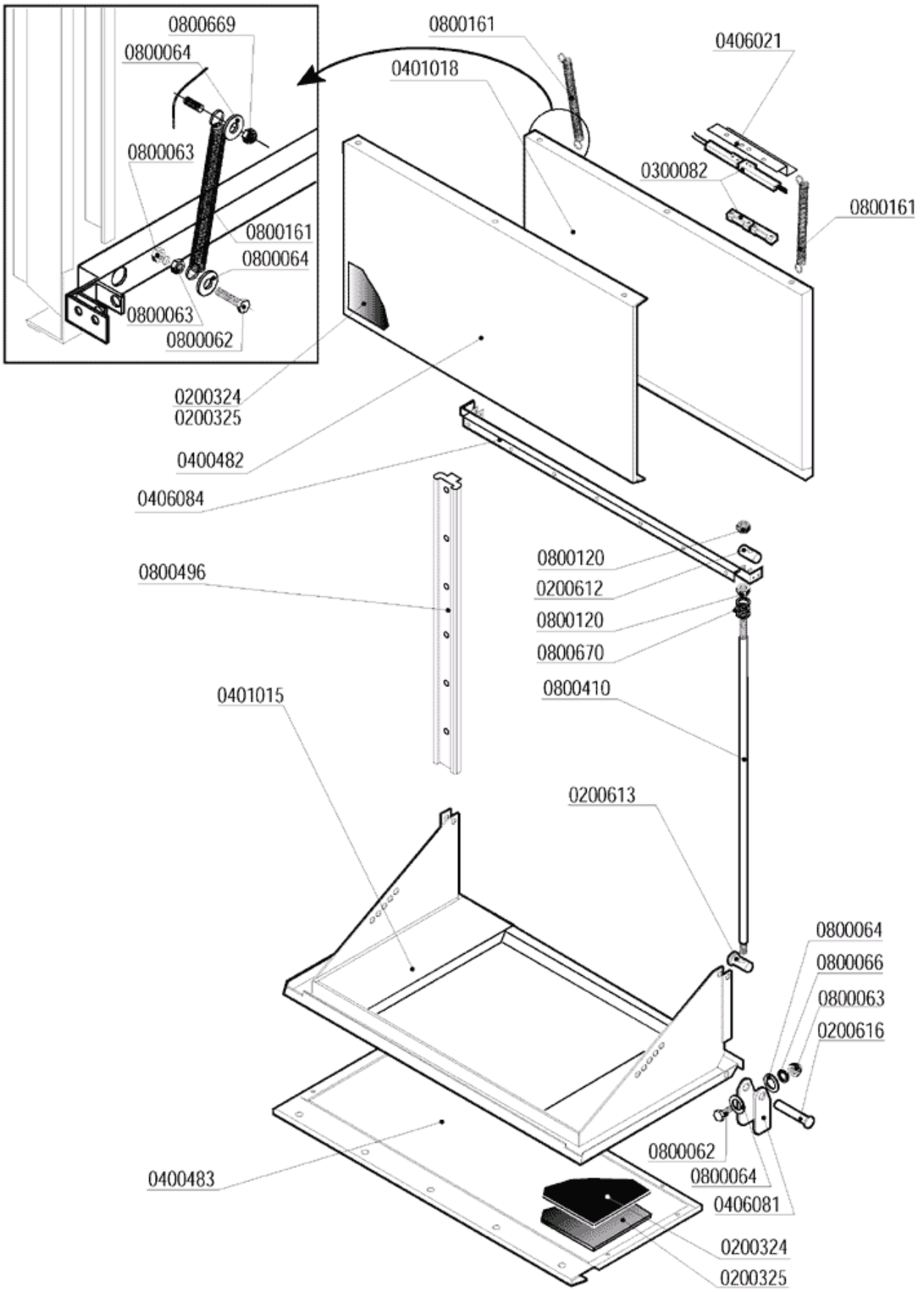

lamber	SPORTELLO - PORTE DOOR - TÜR	MOD. **LP8**	TAV. **8 B** ED. 09/00

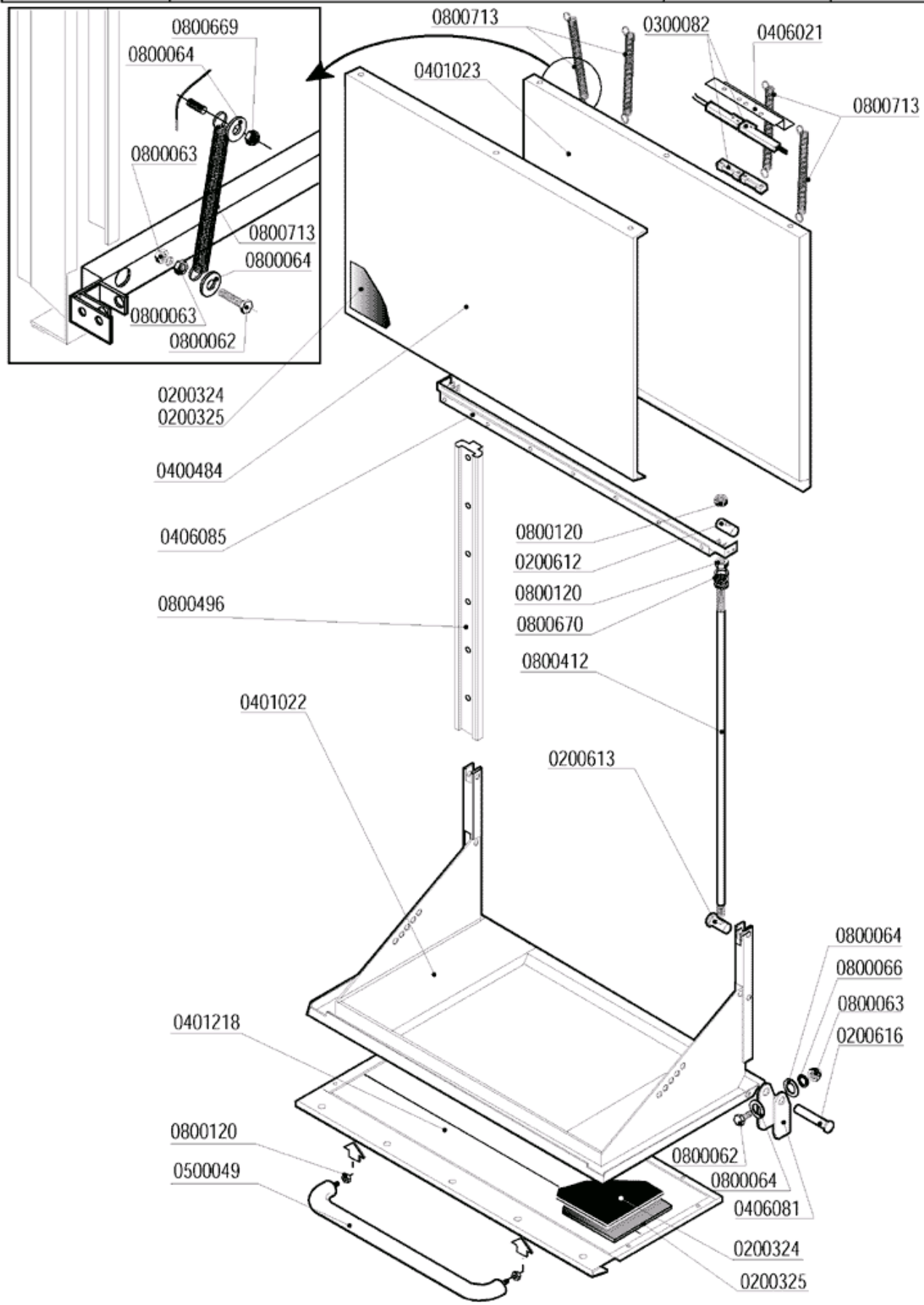

lamber	GUIDE E FILTRI - GLISSIERE ET FILTRES SLIDE AND FILTERS - KORBFÜHRUNG UND FILTER	MOD. LP6-LP8	TAV. 9 B ED. 09/00

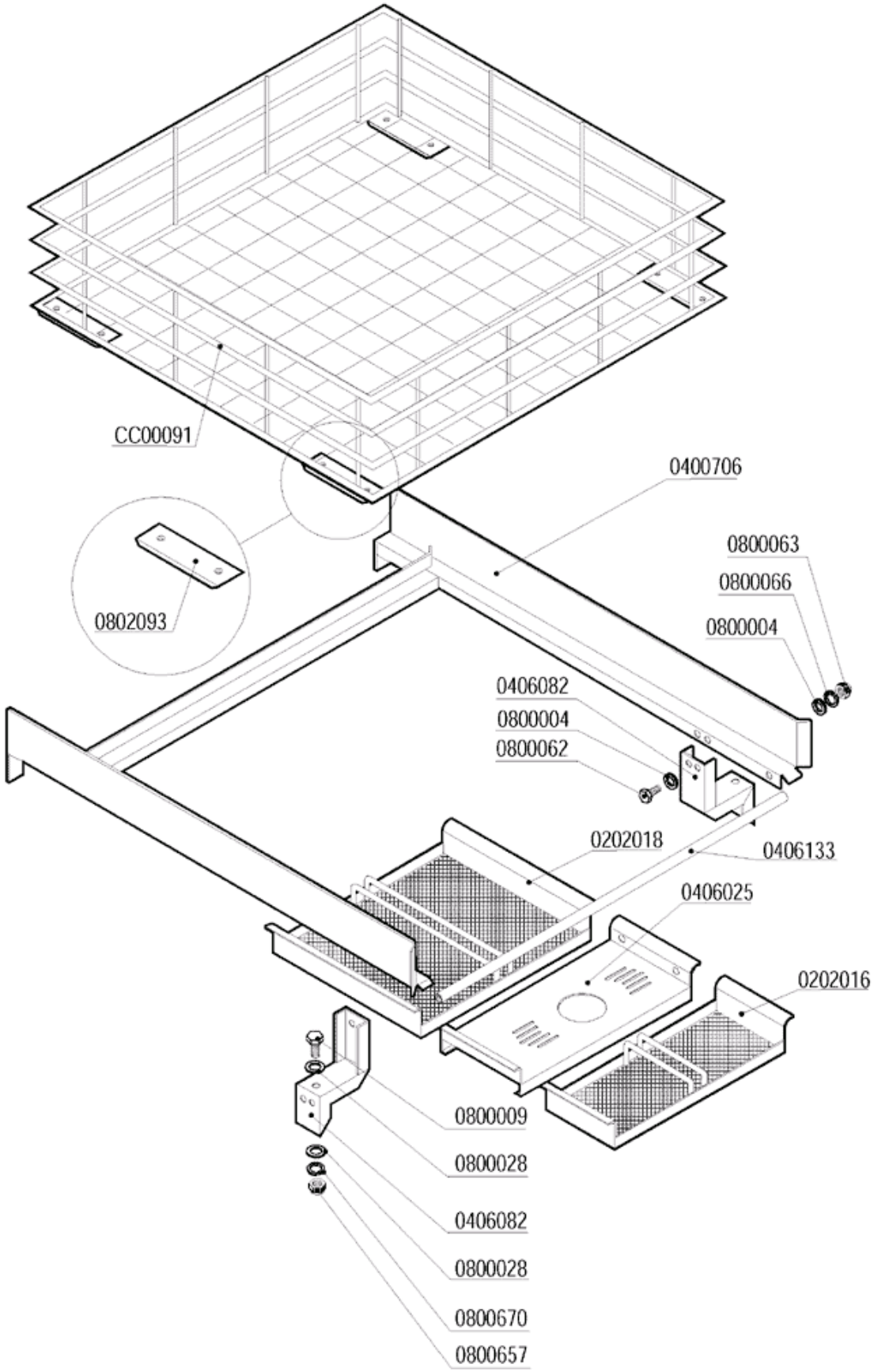

lamber	BASAMENTO - SOCLE BASE - SOCKEL	MOD. LP6-LP8	TAV. 10 B ED. 09/00

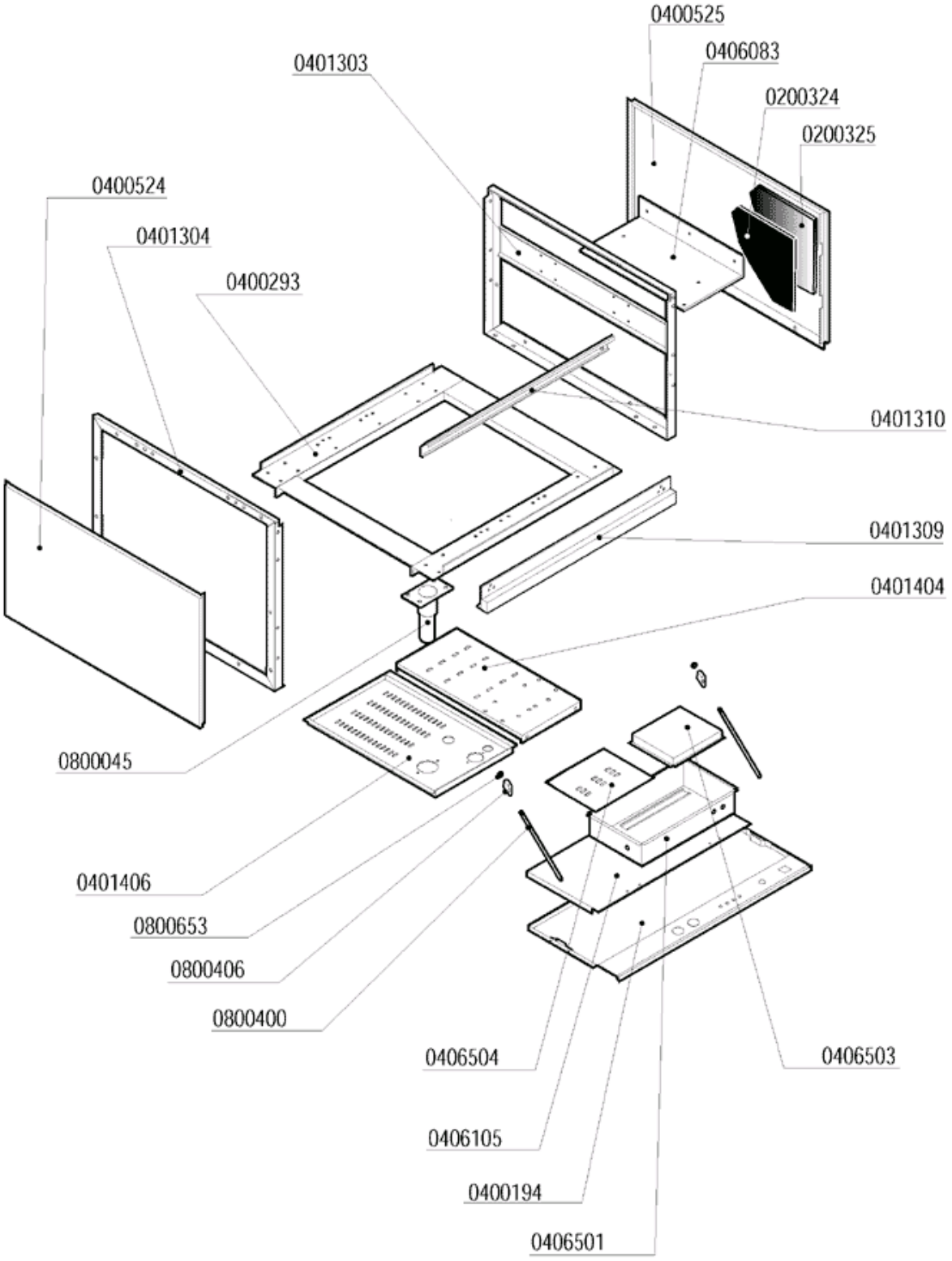

lamber	CARROZZERIA CAPOTTA - CARROSSERIE CAPOTE HOOD - KARROSSERIE HAUBE	MOD. **LP6**	TAV. **11 B** ED. 09/00

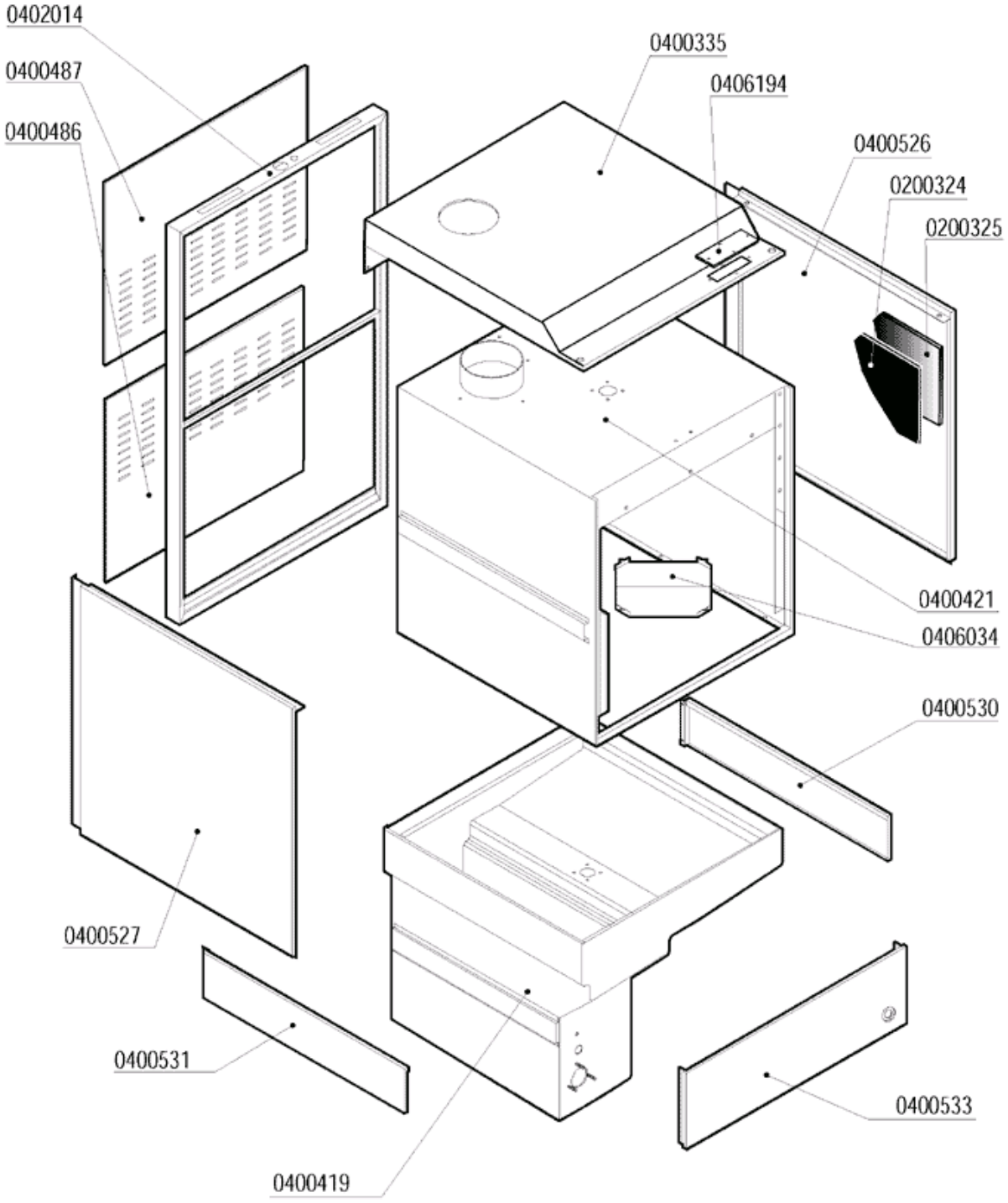

lamber	CARROZZERIA CAPOTTA - CARROSSERIE CAPOTE HOOD - KARROSSERIE HAUBE	MOD. LP8	TAV. 12 B ED. 09/00

