FAGOR

FAGOR INDUSTRIAL

DESPIECE TÉCNICO
TECHNICAL PARTS

Lavavajillas

Dishwasher

MODELOS

CO-350	19013254
CO-350 B	19027186
CO-350 DD	19027187
CO-350 B DD	19027189
CO-350 COLD	19027203
CO-350 COLD B	19030071
CO-350 COLD DD	19027204
CO-350 COLD B DD	19027205
CO-400	19022421
CO-400 COLD	19029231
CO-400 COLD B	19030070
CO-400 COLD DD	19029232
CO-400 COLD B DD	19029233
CO-400 SOFT DD	19029395

Diciembre 2014 December

Revisado ABRIL 2021 APRIL updated



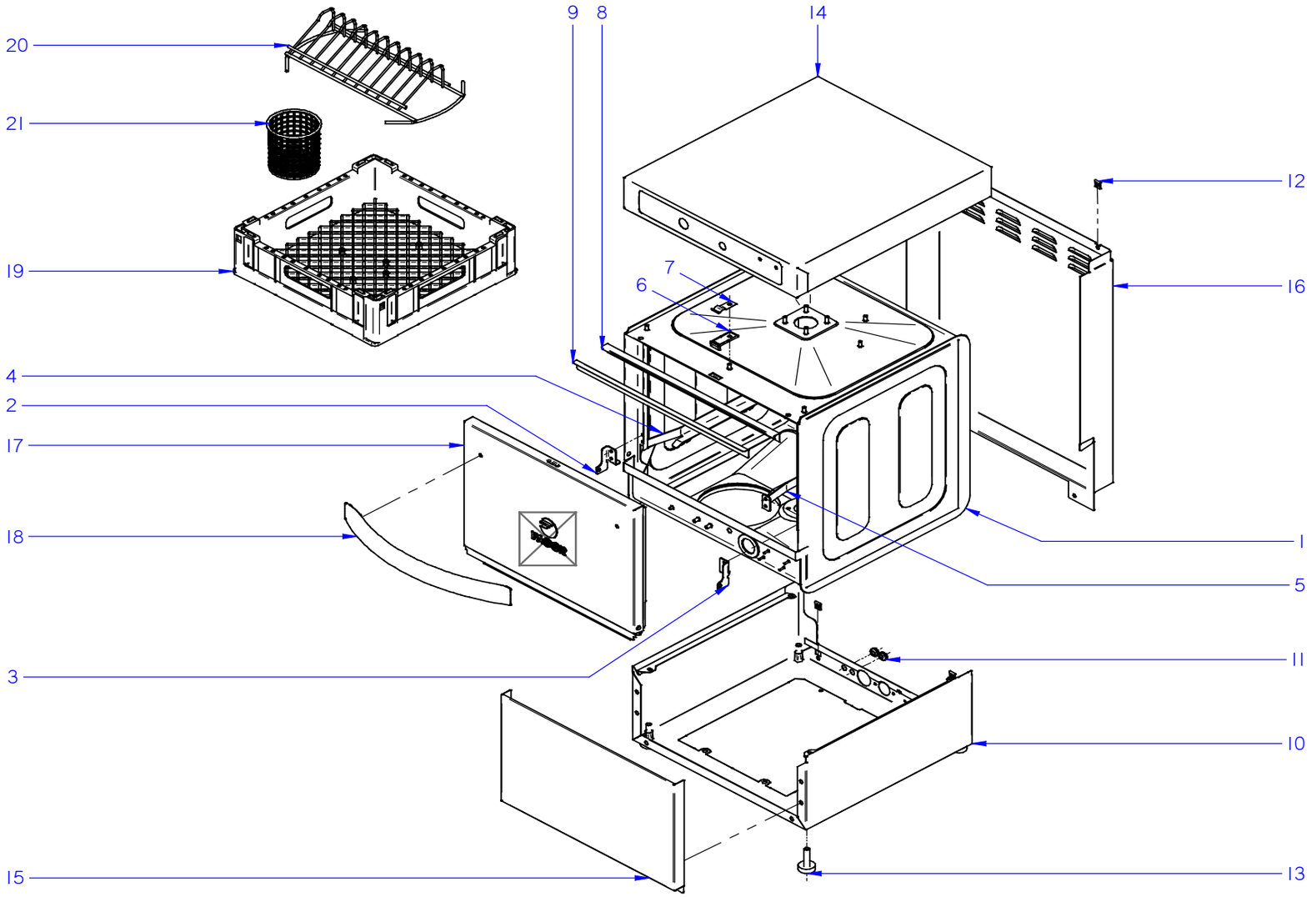

Drawing Nr.	Signature	Date	ARMAZÓN / FRAME	Sheet
C-3321	Iban R.	jun-17	CO-350/400	1

FAGOR

ZONA / ZONE	ARMAZON / FRAME			LÁMINA / DRAWING	C-3321	FAGOR

ITEM	REFERENCIA REFERENCE	DENOMINACIÓN	DENOMINATION	CO-350	CO-350 B	CO-350 DD	CO-350 B DD	CO-350 COLD	CO-350 COLD B	CO-350 COLD DD	CO-350 COLD B DD	RECOMMENDED	HASTA / UNTIL	DESDE / SINCE	NOTAS / NOTES
1	12047953	CUBA SOLDADA CO-350	WELDED TUB CO-350	1	1	1	1	1	1	1	1				
2	12048627	SOPORTE PUERTA IZQUIERDO	LEFT DOOR SUPPORT	1	1	1	1	1	1	1	1				
3	12048774	SOPORTE PUERTA DERECHO	RIGHT DOOR SUPPORT	1	1	1	1	1	1	1	1				
4	12049133	GUIA CESTILLO IZQU CO-350	LEFT BASKET GUIDE CO-350	1	1	1	1	1	1	1	1				
5	12049135	GUIA CESTILLO DCHA CO-350	RIGHT BASKET GUIDE CO-350	1	1	1	1	1	1	1	1				
6	12087183	MACHO CIERRE PUERTA	DOOR LOCK	1	1	1	1	1	1	1	1				
7	12087186	FLEJE_CIERRE_PUERTA	DOOR LOCK SPRING	1	1	1	1	1	1	1	1				
8	12087200	PERFIL VAHOS CO-350	STEAM SEAL CO-350	1	1	1	1	1	1	1	1				
9	12102061	PERFIL JUNTA VAHOS CO-350	STEAM PROFILE SEAL CO-350	1	1	1	1	1	1	1	1				
10	12049271	BASE SOLDADA CO-350	WELDED BASE CO-350	1	1	1	1	1	1	1	1				
11	12112707	PASAMUROS 18x8x6	1MM SHEET BUSHING 18x8x6	2	2	2	2	2	2	2	2				
12	12087215	TUERCA RÁPIDA M5	FAST NUT M5	4	4	4	4	4	4	4	4				
13	12024163	PATA REGULABLE	REGULABLE FOOT	4	4	4	4	4	4	4	4				
14	12259289	TAPA PORTAMANDOS 350	350 CONTROL HOLDER TOP	1	1	1	1	1	1	1	1		20/11/2018		
14	12259290	TAPA PORTAMANDOS 350	350 CONTROL HOLDER TOP	1	1	1	1	1	1	1	1			20/11/2018	
15	12048562	PANEL FRONTAL CO-350	FRONT PANEL CO-350	1	1	1	1	1	1	1	1				
16	12048645	PANEL POSTERIOR CO-350	REAR PANEL CO-350	1	1	1	1	1	1	1	1				
17	12281755	PUERTA CO-350	DOOR CO-350	1	1	1	1	1	1	1	1				
18	12049468	ASA LAVAVASOS	GLASSWASHER HANDLE	1	1	1	1	1	1	1	1				
18a	12009912	JUNTA TÓRICA	O-RING	2	2	2	2	2	2	2	2				
18b	12115204	TORN. M6x30	M6x30 SCREW	2	2	2	2	2	2	2	2				
19	12024550	CESTILLO 350	BASKET 350	2	2	2	2	2	2	2	2				
20	12024286	SUPLEMENTO PLATILLOS 350	SMALL DISHES SUPPLEMENT 350	1	1	1	1	1	1	1	1				
21	12025242	CESTILLO PORTACUBIERTOS	CUTLERY BASKET	1	1	1	1	1	1	1	1				

ZONA / ZONE	ARMAZON / FRAME									C-3321	FAGOR

ITEM	REFERENCIA REFERENCE	DENOMINACIÓN	DENOMINATION	CO-400	CO-400 COLD	CO-400 COLD B	CO-400 COLD DD	CO-400 COLD B DD	CO-400 SOFT DD			RECOMMENDED	HASTA / UNTIL	DESDE / SINCE	NOTAS / NOTES
1	12101982	CUBA SOLDADA CO-400	WELDED TUB CO-400	1	1	1	1	1	1						
2	12048627	SOPORTE PUERTA IZQUIERDO	LEFT DOOR SUPPORT	1	1	1	1	1	1						
3	12048774	SOPORTE PUERTA DERECHO	RIGHT DOOR SUPPORT	1	1	1	1	1	1						
4	12102193	GUIA CESTILLO IZQU CO-400	LEFT BASKET GUIDE CO-400	1	1	1	1	1	1						
5	12102194	GUIA CESTILLO DCHA CO-400	RIGHT BASKET GUIDE CO-400	1	1	1	1	1	1						
6	12087183	MACHO CIERRE PUERTA	DOOR LOCK	1	1	1	1	1	1						
7	12087186	FLEJE_CIERRE_PUERTA	DOOR LOCK SPRING	1	1	1	1	1	1						
8	12101867	PERFIL VAHOS CO-400	STEAM SEAL CO-400	1	1	1	1	1	1						
9	12102035	PERFIL JUNTA VAHOS CO-400	STEAM PROFILE SEAL CO-400	1	1	1	1	1	1						
10	12101978	BASE SOLDADA CO-400	WELDED BASE CO-400	1	1	1	1	1	1						
11	12112707	PASAMUROS 18x8x6 CHAPA E=1	1MM SHEET BUSHING 18x8x6	2	2	2	2	2	2						
12	12087215	TUERCA RÁPIDA M5	FAST NUT M5	4	4	4	4	4	4						
13	12024163	PATA REGULABLE	REGULABLE FOOT	4	4	4	4	4	4						
14	12259291	TAPA PORTAMANDOS 400	400 CONTROL HOLDER TOP	1	1	1	1	1	1				20/11/2018		
14	12259293	TAPA PORTAMANDOS 400	400 CONTROL HOLDER TOP	1	1	1	1	1	1					20/11/2018	
15	12101870	PANEL FRONTAL CO-400	FRONT PANEL CO-400	1	1	1	1	1	1						
16	12101871	PANEL POSTERIOR CO-400	REAR PANEL CO-400	1	1	1	1	1	1						
17	12281757	PUERTA CO-400	DOOR CO-400	1	1	1	1	1	1						
18	12049468	ASA LAVAVASOS	GLASSWASHER HANDLE	1	1	1	1	1	1						
18a	12009912	JUNTA TÓRICA	O-RING	2	2	2	2	2	2						
18b	12115204	TORN. M6x30	M6x30 SCREW	2	2	2	2	2	2						
19	12025069	CESTILLO 400	BASKET 400	2	2	2	2	2	2						
20	12025030	SUPLEMENTO PLATILLOS 400	SMALL DISHES SUPPLEMENT 400	1	1	1	1	1	1						
21	12025242	CESTILLO PORTACUBIERTOS	CUTLERY BASKET	1	1	1	1	1	1						

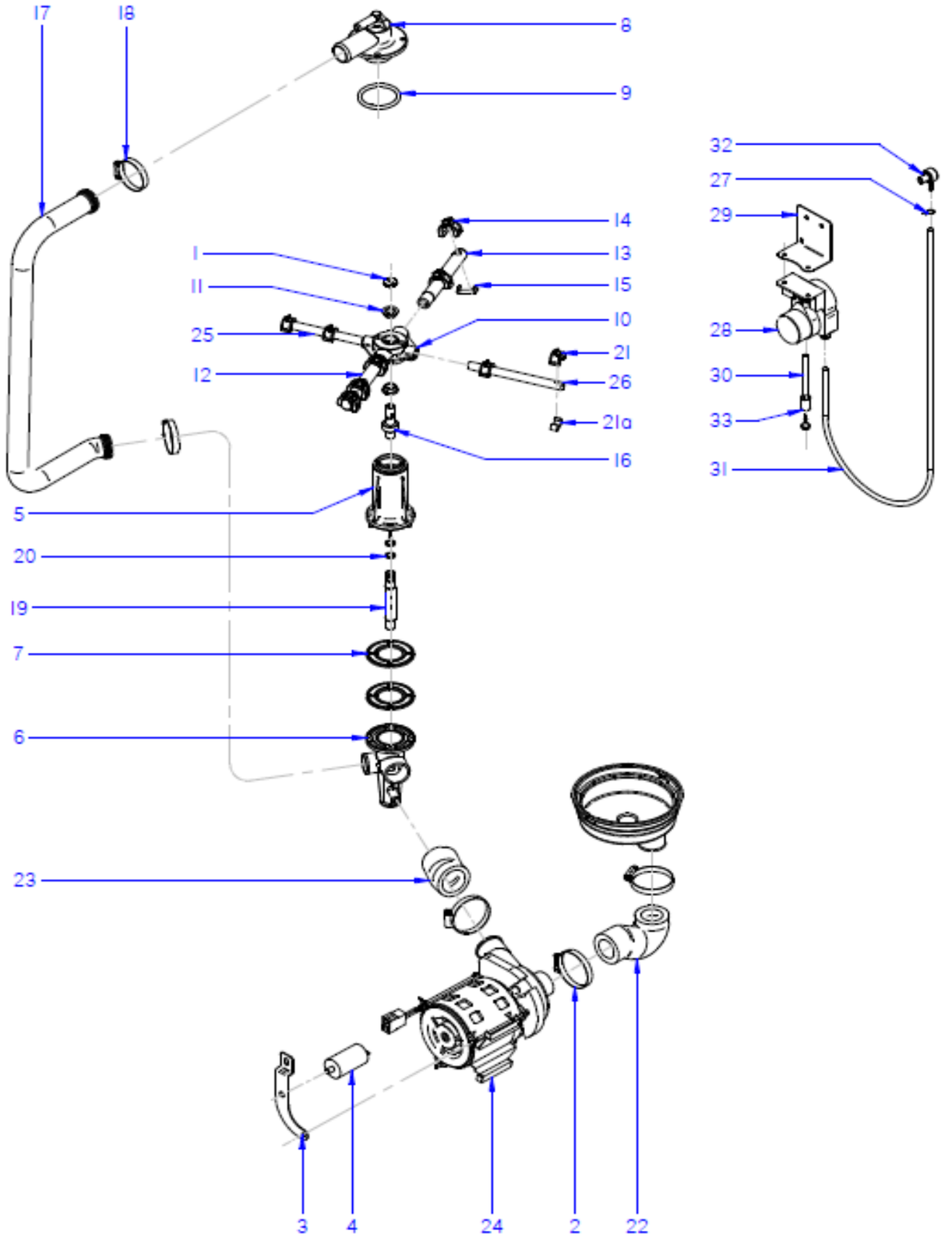

Drawing Nr.	Signature	Date	PARTE FUNCIONAL LAVADO / WASHING PARTS	Sheet
C-3322	Iban R.	jun-17	CO-350/400	4

FAGOR

ZONA / ZONE	PARTE FUNCIONAL LAVADO / WASHING FUNCTIONAL PART	LÁMINA / DRAWING	C-3322	FAGOR

ITEM	REFERENCIA REFERENCE	DENOMINACIÓN	DENOMINATION	CO-350	CO-350 B	CO-350 DD	CO-350 B DD	CO-350 COLD	CO-350 COLD B	CO-350 COLD DD	CO-350 COLD B DD	RECOMMENDED	HASTA / UNTIL	DESDE / SINCE	NOTAS / NOTES
1	12009829	TORNILLO ESPECIAL M.5X0.8	SPECIAL SCREW M.5X0.8	1	1	1	1	1	1	1	1				
2	12009962	ABRAZADERA 40-60	40-60 CLAMP	4	4	4	4	4	4	4	4				
3	12111848	SOPORTE BOMBA LAVADO 350	WASHIG PUMP SUPPORT 350	1	1	1	1	1	1	1	1				
4	12024346	CONDENSADOR 10MF	10MF CAPACITOR	1	1	1	1	1	1	1	1	X			
5	12112971	SOP. DISTRIBUIDOR INFERIOR	LOWER SPRY-ARM SUPPORT	1	1	1	1	1	1	1	1				
6	12024703	PASAMUROS CESTO CUADRADO	SQUARE BASKET BUSHING	1	1	1	1	1	1	1	1				
7	12023533	JUNTA ESTANQUEIDAD	SEALING GASKET	2	2	2	2	2	2	2	2				
8	12113028	SOP. DISTRIBUIDOR SUPERIOR	UPPER SPRY-ARM SUPPORT	1	1	1	1	1	1	1	1				
9	12010079	JUNTA TOR.50.17X60.83X5.3	O-RING 50.17X60.83X5.3	1	1	1	1	1	1	1	1				
10	12025216	CRUCETA	CROSSBRACE	2	2	2	2	2	2	2	2				
11	12024086	CASQUILLO CRUCETA	CROSSBRACE BUSHING	2	2	2	2	2	2	2	2				
12	12019827	RAMA LAVADO A 350	WASHING BRANCH A 350	2	2	2	2	2	2	2	2		29/06/2015		
12	12024138	RAMA LAVADO A 350	WASHING BRANCH A 350	2	2	2	2	2	2	2	2			30/06/2015	
13	12019857	RAMA LAVADO B 350	WASHING BRANCH B 350	2	2	2	2	2	2	2	2		29/06/2015		
13	12025251	RAMA LAVADO B 350	WASHING BRANCH B 350	2	2	2	2	2	2	2	2			30/06/2015	
14	12023732	TOBERA LAVADO	WASHING NOZZLE	10	10	10	10	10	10	10	10				
15	12023710	ENGANCHE TOBERA LAVADO	WASHING NOZZLE ENGAGE	10	10	10	10	10	10	10	10				
16	12025114	EJE	SHAFT	2	2	2	2	2	2	2	2				
17	12024059	ARBOL LAVADO 350	WASHING TREE 350	1	1	1	1	1	1	1	1				
18	12009986	ABRAZADERA 32-50L	32-50L CLAMP	2	2	2	2	2	2	2	2				
19	12023801	EMPALME ACLARADO	RINSE CONNECTION	1	1	1	1	1	1	1	1				
20	12009911	JUNTA TO.10.82X14.38X1.78	O-RING 10.82X14.38X1.78	2	2	2	2	2	2	2	2				
21	12024252	TOBERA ACLARADO	RINSING NOZZLE	8	8	8	8	8	8	8	8		29/06/2015		
21	12024077	TOBERA ACLARADO	RINSING NOZZLE	8	8	8	8	8	8	8	8			30/06/2015	
21a	12024006	ENGANCHE TOBERA ACLARADO	RINSING NOZZLE ENGAGE	8	8	8	8	8	8	8	8			30/06/2015	
22	12023670	CODO ASPIRACION	SUCTION ELBOW	1	1	1	1	1	1	1	1				
23	12023607	CODO IMPULSION	EXPULSIOIN ELBOW	1	1	1	1	1	1	1	1				
24	12023429	BOMBA LAVADO 50/60HZ 260KW	WASHING PUMP 50/60HZ 260KW	1	1	1	1	1	1	1	1	X			

ZONA / ZONE	PARTE FUNCIONAL LAVADO / WASHING FUNCTIONAL PART	LÁMINA / DRAWING	C-3322	FAGOR

ITEM	REFERENCIA REFERENCE	DENOMINACIÓN	DENOMINATION	CO-350	CO-350 B	CO-350 DD	CO-350 B DD	CO-350 COLD	CO-350 COLD B	CO-350 COLD DD	CO-350 COLD B DD	RECOMMENDED	HASTA / UNTIL	DESDE / SINCE	NOTAS / NOTES
25	12020475	RAMA ACLARADO A 350	RINSING BRANCH A 350	1	1	1	1	1	1	1	1		29/06/2015		
25	12025253	RAMA ACLARADO A 350	RINSING BRANCH A 350	1	1	1	1	1	1	1	1			30/06/2015	
26	12020476	RAMA ACLARADO B 350	RINSING BRANCH B 350	1	1	1	1	1	1	1	1		29/06/2015		
26	12024137	RAMA ACLARADO B 350	RINSING BRANCH B 350	1	1	1	1	1	1	1	1			30/06/2015	
	19022347	**KIT DOSIFICADOR DETERGENTE EVO**	**DETERGENT DISPENSER KIT EVO**												
27	12023707	BRIDA ELASTICA TUBO	ELASTIC CLAMP FOR PIPES	_	_	1	1	_	_	1	1				
28	12024216	DOSIFIC. DGTE REGULABLE G300	REGUL. DETERG. DISPENSER G300	_	_	1	1	_	_	1	1		01/03/2016		
28	12133011	DGTE REGULABLE	DETERG. REGUL.	_	_	1	1	_	_	1	1			01/03/2016	
29	12049139	SOPORT. DOSIFICADORES	DISPENSERS SUPPORT	_	_	1	1	_	_	1	1				
30	12265549	CONDUCTO DETERGENTE	DETERGENT PIPE	_	_	1	1	_	-	1	1				
31	11000079	CONDUCTO DOSIF. TRANSP 6X4	DISPENSER TRANSPARENT PIPE	_	_	1	1	_	_	1	1				
32	12024531	INYECTOR DETERGENTE INOX	DETERGENT INJECTOR	_	_	1	1	_	_	1	1				
33	12164632	PESO FILTRO	FILTER'S WEIGHT	_	_	1	1	_	_	1	1				

ZONA / ZONE	PARTE FUNCIONAL LAVADO / WASHING FUNCTIONAL PART		C-3322	FAGOR

ITEM	REFERENCIA REFERENCE	DENOMINACIÓN	DENOMINATION	CO-400	CO-400 COLD	CO-400 COLD B	CO-400 COLD DD	CO-400 COLD B DD	CO-400 SOFT DD			RECOMMENDED	HASTA / UNTIL	DESDE / SINCE	NOTAS / NOTES
1	12009829	TORNILLO ESPECIAL M.5X0.8	SPECIAL SCREW M.5X0.8	1	1	1	1	1	1						
2	12009962	ABRAZADERA 40-60	40-60 CLAMP	4	4	4	4	4	4						
3	12111106	SOPORTE BOMBA LAVADO 400	WASHIG PUMP SUPPORT 400	1	1	1	1	1	1						
4	12024346	CONDENSADOR 10MF	10MF CAPACITOR	1	1	1	1	1	1			X			
5	12112971	SOP. DISTRIBUIDOR INFERIOR	LOWER SPRY-ARM SUPPORT	1	1	1	1	1	1						
6	12024703	PASAMUROS CESTO CUADRADO	SQUARE BASKET BUSHING	1	1	1	1	1	1						
7	12023533	JUNTA ESTANQUEIDAD	SEALING GASKET	2	2	2	2	2	2						
8	12113028	SOP. DISTRIBUIDOR SUPERIOR	UPPER SPRY-ARM SUPPORT	1	1	1	1	1	1						
9	12010079	JUNTA TOR.50.17X60.83X5.3	O-RING 50.17X60.83X5.3	1	1	1	1	1	1						
10	12025216	CRUCETA	CROSSBRACE	2	2	2	2	2	2						
11	12024086	CASQUILLO CRUCETA	CROSSBRACE BUSHING	2	2	2	2	2	2						
12	12022381	RAMA LAVADO A 400	WASHING BRANCH A 400	2	2	2	2	2	2				17/04/2016		
12	12126179	RAMA LAVADO A 400	WASHING BRANCH A 400	2	2	2	2	2	2				03/07/2016	18/04/2016	
13	12022382	RAMA LAVADO B 400	WASHING BRANCH A 400	2	2	2	2	2	2				17/04/2016		
13	12126198	RAMA LAVADO B 400	WASHING BRANCH B 400	2	2	2	2	2	2				03/07/2016	18/04/2016	
13	12022382	RAMA LAVADO B 400	WASHING BRANCH A 400	2	2	2	2	2	2					04/07/2016	
14	12023732	TOBERA LAVADO	WASHING NOZZLE	12	12	12	12	12	12						
15	12023710	ENGANCHE TOBERA LAVADO	WASHING NOZZLE ENGAGE	12	12	12	12	12	12						
16	12025114	EJE	SHAFT	2	2	2	2	2	2						
17	12025154	ARBOL LAVADO 400	WASHING TREE 400	1	1	1	1	1	1						
18	12009986	ABRAZADERA 32-50L	32-50L CLAMP	2	2	2	2	2	2						
19	12023801	EMPALME ACLARADO	RINSE CONNECTION	1	1	1	1	1	1						
20	12009911	JUNTA TO.10.82X14.38X1.78	O-RING 10.82X14.38X1.78	2	2	2	2	2	2						
21	12024252	TOBERA ACLARADO 350	RINSING NOZZLE	10	10	10	10	10	10				29/06/2015		
21	12024077	TOBERA ACLARADO	RINSING NOZZLE	10	10	10	10	10	10					30/06/2015	
21a	12024006	ENGANCHE TOBERA ACLARADO	RINSING NOZZLE ENGAGE	10	10	10	10	10	10					30/06/2015	

ZONA / ZONE	PARTE FUNCIONAL LAVADO / WASHING FUNCTIONAL PART		C-3322	FAGOR

ITEM	REFERENCIA REFERENCE	DENOMINACIÓN	DENOMINATION	CO-400	CO-400 COLD	CO-400 COLD B	CO-400 COLD DD	CO-400 COLD B DD	CO-400 SOFT DD			RECOMMENDED	HASTA / UNTIL	DESDE / SINCE	NOTAS / NOTES
22	12023670	CODO ASPIRACION	SUCTION ELBOW	1	1	1	1	1	1						
23	12023607	CODO IMPULSION	EXPULSIOIN ELBOW	1	1	1	1	1	1						
24	12023429	BOMBA LAVADO 50/60HZ 260KW	WASHING PUMP 50/60HZ 260KW	1	1	1	1	1	1			X			
25	12022613	RAMA ACLARADO A 400	RINSING BRANCH A 400	1	1	1	1	1	1				29/06/2015		
25	12023526	RAMA ACLARADO A 400	RINSING BRANCH A 400	1	1	1	1	1	1					30/06/2015	
26	12022710	RAMA ACLARADO B 400	RINSING BRANCH B 400	1	1	1	1	1	1				29/06/2015		
26	12023525	RAMA ACLARADO B 400	RINSING BRANCH B 400	1	1	1	1	1	1					30/06/2015	
	19022347	**KIT DOSIFICADOR DETERGENTE EVO**	**DETERGENT DISPENSER KIT EVO**												
27	12023707	BRIDA ELASTICA TUBO	ELASTIC CLAMP FOR PIPES	_	_	_	1	1	1						
28	12024216	DOSIFIC. DGTE REGULABLE G300	REGUL. DETERG. DISPENSER G300	_	_	_	1	1	1				01/03/2016		
28	12133011	DGTE REGULABLE	DETERG. REGUL.	_	_	_	1	1	1					01/03/2016	
29	12049139	SOPORT. DOSIFICADORES	DISPENSERS SUPPORT	_	_	_	1	1	1						
30	12265549	CONDUCTO DETERGENTE	DETERGENT PIPE				1	1	1						
31	11000079	CONDUCTO DOSIF. TRANSP 6X4	DISPENSER TRANSPARENT PIPE	_	_	_	1	1	1						
32	12024531	INYECTOR DETERGENTE INOX	DETERGENT INJECTOR	_	_	_	1	1	1						
33	12164632	PESO FILTRO	FILTER'S WEIGHT	_	_	_	1	1	1						

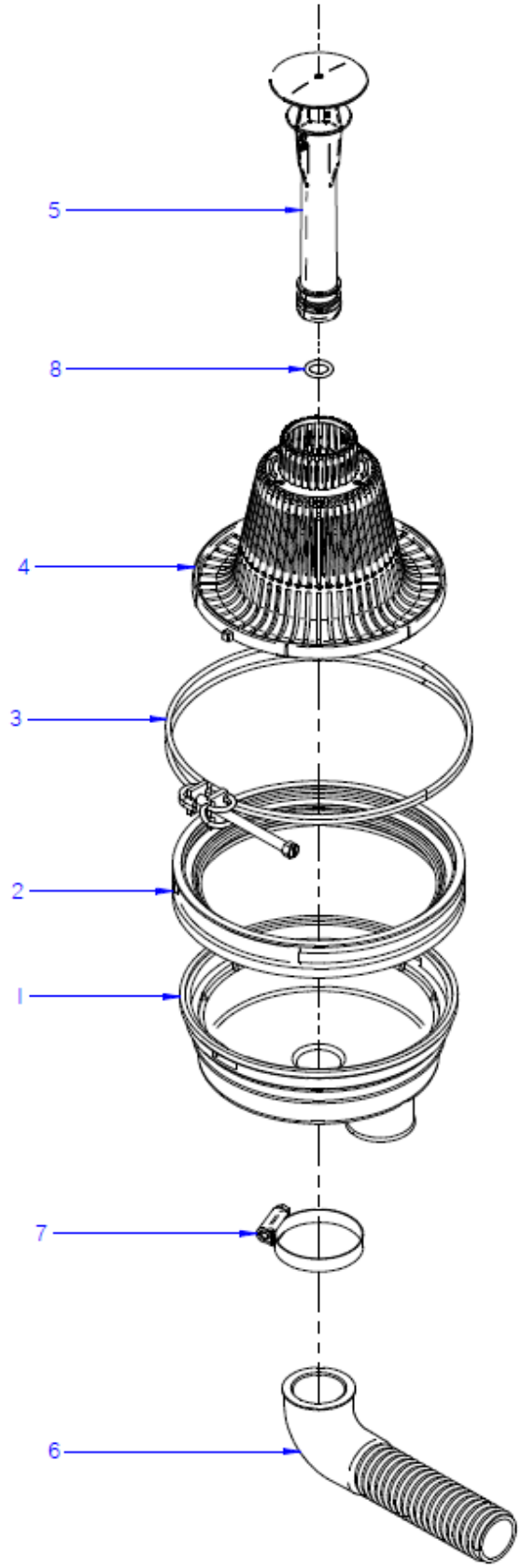

Drawing Nr.	Signature	Date	DESAGÜE / DRAIN	Sheet
C-3323	Iban R.	jun-17	CO-350/400	9

FAGOR

ZONA / ZONE	DESAGÜE / DRAIN	LÁMINA / DRAWING	C-3323	FAGOR

ITEM	REFERENCIA REFERENCE	DENOMINACIÓN	DENOMINATION	CO-350	CO-350 DD	CO-350 COLD	CO-350 COLD DD	CO-400	CO-400 COLD	CO-400 COLD DD	CO-400 SOFT DD	RECOMMENDED	HASTA / UNTIL	DESDE / SINCE	NOTAS / NOTES
	19013376	**KIT BOMBA DE DESAGÜE**	**DRAINING PUMP KIT**												
1	12112942	CUBETA CO-400	PAIL CO-400	1	1	1	1	1	1	1	1				
2	12024113	JUNTA CUBETA	PAIL SEAL	1	1	1	1	1	1	1	1				
3	12025195	ABRAZADERA CUBETA COMPLET	PAIL COMPLETE CLAMP	1	1	1	1	1	1	1	1				
4	12092003	FILTRO CO-400	CO-400 FILTER	1	1	1	1	1	1	1	1				
5	12120614	ALIVIADERO CO-400	CO-400 SPILLWAY	1	1	1	1	1	1	1	1				
6	12024114	MANGUERA DESAGUE	DRAINING PIPE	1	1	1	1	1	1	1	1				
7	12009972	ABRAZAD.ELAST.37.7-39.7	37,7-39,7 CLAMP	1	1	1	1	1	1	1	1				
8	12104085	JUNTA TORICA ALIVIADERO	SPILLWAY O-RING	1	1	1	1	1	1	1	1				

BOMBA DESAGÜE / DEWATERING PUMP

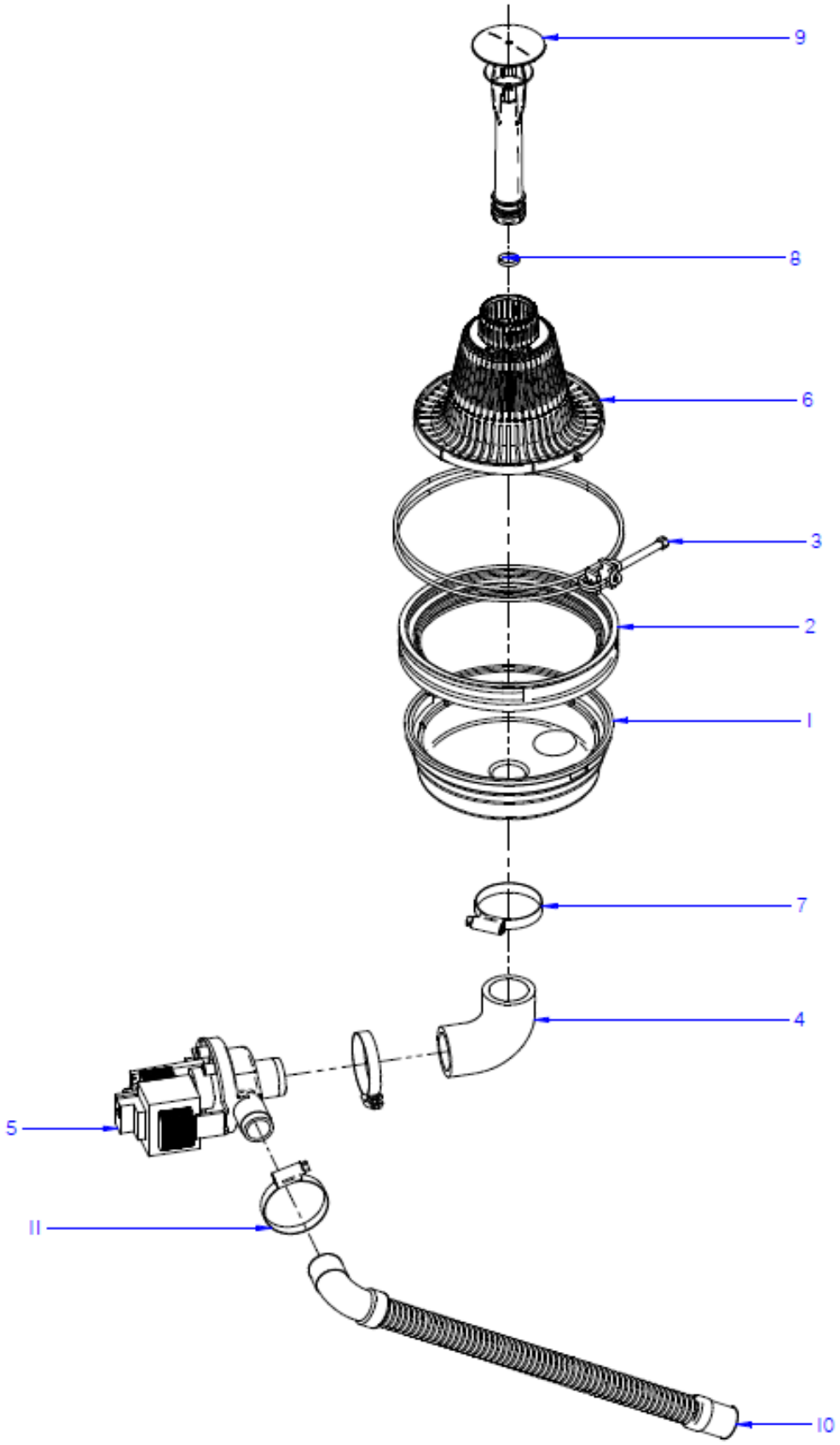

Drawing Nr.	Signature	Date	BOMBA DESAGÜE / DEWATERING PUMP	Sheet
C-3324	Iban R.	jun-17	CO-350/400	11

FAGOR

ZONA / ZONE	BOMBA DESAGÜE / DEWATERING PUMP	LÁMINA / DRAWING	C-3324	FAGOR

ITEM	REFERENCIA REFERENCE	DENOMINACIÓN	DENOMINATION	CO-350 B	CO-350 B DD	CO-350 COLD B	CO-350 COLD B DD	CO-400 COLD B	CO-400 COLD B DD					RECOMMENDED	HASTA / UNTIL	DESDE / SINCE	NOTAS / NOTES
1	12112942	CUBETA CO-400	PAIL CO-400	1	1	1	1	1	1								
2	12024113	JUNTA CUBETA	PAIL SEAL	1	1	1	1	1	1								
3	12025195	ABRAZADERA CUBETA COMPLET	PAIL COMPLETE CLAMP	1	1	1	1	1	1								
4	12094016	CONDUCTO ASPIRACION	SUCTION PIPE	1	1	1	1	1	1								
5	12094265	BOMBA DESAGÜE 1N 50/60Hz 38W	DRAINING PUMP 1N 50/60Hz 38W	1	1	1	1	1	1					X			
6	12092003	FILTRO CO-400	CO-400 FILTER	1	1	1	1	1	1								
7	12009997	ABRAZADERA 25-40	25-40 CLAMP	2	2	2	2	2	2								
8	12104085	JUNTA TORICA ALIVIADERO	SPILLWAY O-RING	1	1	1	1	1	1								
9	12133299	ALIVIADERO CO-400 B	CO-400 B SPILLWAY	1	1	1	1	1	1								
10	12023666	MANGUERA DESAGÜE	DRAINING PIPE	1	1	1	1	1	1								
11	12010023	ABRAZADERA 20-32	20-32 CLAMP	1	1	1	1	1	1								

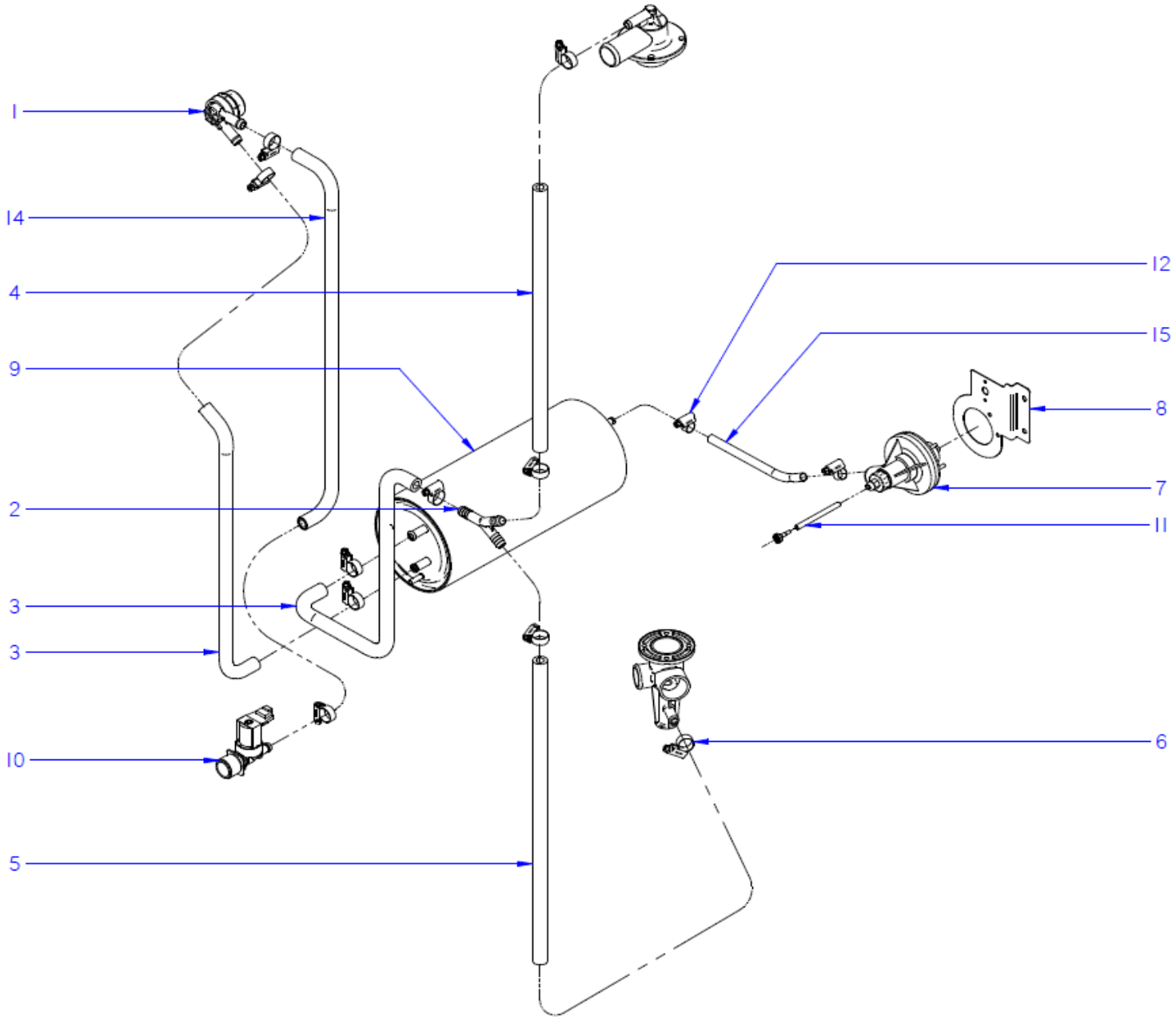

Drawing Nr.	Signature	Date	ACLARADO / RINSE	Sheet
C-3325	Iban R.	jun-17	CO-350/400	13

FAGOR

ZONA / ZONE	PARTE FUNCIONAL ACLARADO / FUNCTIONAL RINSE PART			LÁMINA / DRAWING	C-3325	FAGOR

ITEM	REFERENCIA REFERENCE	DENOMINACIÓN	DENOMINATION	CO-350	CO-350 B	CO-350 DD	CO-350 B DD	CO-400				RECOMMENDED	HASTA / UNTIL	DESDE / SINCE	NOTAS / NOTES
1	12024568	VALVULA ANTIRRETORNO	NON-RETURN VALVE	1	1	1	1	1				X			
2	12023511	RACORD EN Y	Y FITTING	1	1	1	1	1							
3	12245966	CONDUCTO CALDERIN-RACORD	BOILER-FITTING PIPE	2	2	2	2	2							
4	11000083	TUBO GOMA NEGRA D 17x10	BLACK RUBBER PIPE D 17x10	1	1	1	1	1							
5	11000083	TUBO GOMA NEGRA D 17x10	BLACK RUBBER PIPE D 17x10	1	1	1	1	1							
6	12010036	ABRAZADERA 12-20	12-20 CLAMP	10	10	10	10	10							
7	12133010	DOSIFICADOR ABRILLANTADOR	RINSE-AID DISPENSER	1	1	1	1	1							
8	12132302	SOPORTE TERMOSTATOS	THERMOSTATS SUPPORT	1	1	1	1	1							
9	12049602	CALDERIN CO-400	BOILER CO-400	1	1	1	1	1							
10	12110534	E.V.SIMPLE 220V. 50/60Hz	SIMPLE ELECTROVALVE	1	1	1	1	1				X	01/11/2017		
10	12025161	E.V.SIMPLE 220V. 50/60Hz	SIMPLE ELECTROVALVE	1	1	1	1	1				X		01/11/2017	
11	12265502	CONDUCTO ABRILLANTADOR	RINSE AID PIPE	1	1	1	1	1							
12	12010047	ABRAZADERA 8-14L	8-14L CLAMP	2	2	2	2	2							
14	12093330	CONDUCTO EV-ANTIRRETORNO	EV-NON-RETURN PIPE	1	1	1	1	_							
14	12093403	CONDUCTO EV-ANTIRRETORNO	EV-NON-RETURN PIPE	_	_	_	_	1							
15	11002150	TUBO EPDM TRENZADO 6x12	EPDM BRAIDED PIPE 6x12	1	2	3	4	4							

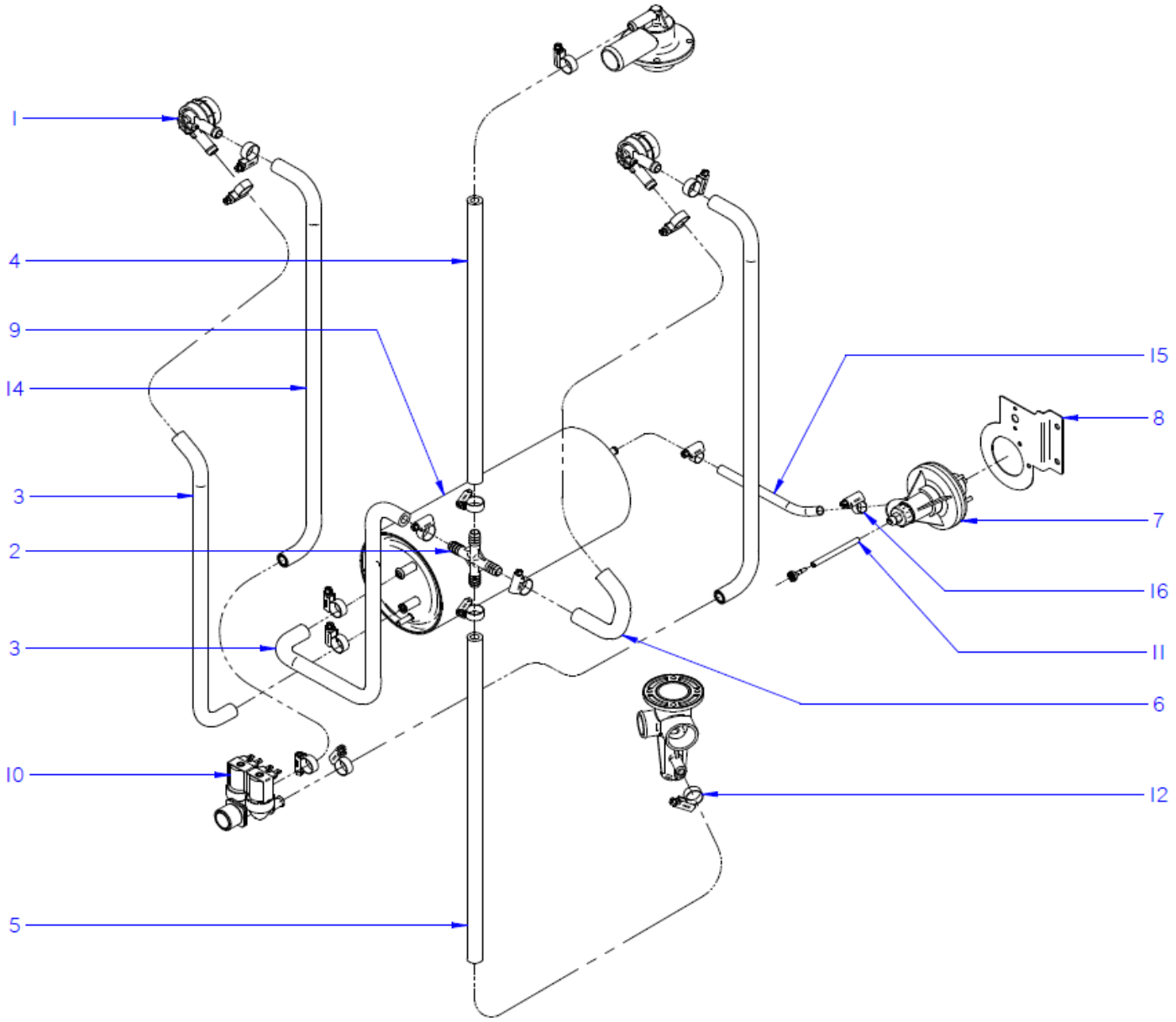

Drawing Nr.	Signature	Date	ACLARADO / RINSE	Sheet
C-3326	Iban R.	jun-17	CO-350/400 COLD	15

FAGOR

ZONA / ZONE	PARTE FUNCIONAL ACLARADO COLD / FUNCTIONAL RINSE PART COLD		C-3326	FAGOR

ITEM	REFERENCIA REFERENCE	DENOMINACIÓN	DENOMINATION	CO-350 COLD	CO-350 COLD B	CO-350 COLD DD	CO-350 COLD B DD					RECOMMENDED	HASTA / UNTIL	DESDE / SINCE	NOTAS / NOTES
1	12024568	VALVULA ANTIRRETORNO	NON-RETURN VALVE	2	2	2	2					X			
2	12024192	RACORD EN CRUZ	CROSS FITTING	1	1	1	1								
3	12245966	CONDUCTO CALDERIN-RACORD	BOILER-FITTING PIPE	2	2	2	2								
4	11000083	TUBO GOMA NEGRA D 17x10	BLACK RUBBER PIPE D 17x10	1	1	1	1								
5	11000083	TUBO GOMA NEGRA D 17x10	BLACK RUBBER PIPE D 17x10	1	1	1	1								
6	11000083	TUBO GOMA NEGRA D 17x10	BLACK RUBBER PIPE D 17x10	1	1	1	1								
7	12133010	DOSIFICADOR ABRILLANTADOR	RINSE-AID DISPENSER	1	1	1	1								
8	12132302	SOPORTE TERMOSTATOS	THERMOSTATS SUPPORT	1	1	1	1								
9	12049602	CALDERIN CO-400	BOILER CO-400	1	1	1	1								
10	12110531	ELECTROVALVULA DOBLE	DOUBLE ELECTROVALVE	1	1	1	1					X	01/11/2017		
10	12023794	ELECTROVALVULA DOBLE	DOUBLE ELECTROVALVE	1	1	1	1					X		01/11/2017	
11	12265502	CONDUCTO ABRILLANTADOR	RINSE AID PIPE	1	1	1	1								
12	12010036	ABRAZADERA 12-20	12-20 CLAMP	14	14	14	14								
14	12093330	CONDUCTO EV-ANTIRRETORNO	EV-NON-RETURN PIPE	2	2	2	2								
15	11002150	TUBO EPDM TRENZADO 6x12	EPDM BRAIDED PIPE 6x12	1	1	1	1								
16	12010047	ABRAZADERA 8-14L	8-14L CLAMP	2	2	2	2								

ZONA / ZONE	PARTE FUNCIONAL ACLARADO COLD / FUNCTIONAL RINSE PART COLD		C-3326	FAGOR

ITEM	REFERENCIA REFERENCE	DENOMINACIÓN	DENOMINATION	CO-400 COLD	CO-400 COLD B	CO-400 COLD DD	CO-400 COLD B DD					RECOMMENDED	HASTA / UNTIL	DESDE / SINCE	NOTAS / NOTES
1	12024568	VALVULA ANTIRRETORNO	NON-RETURN VALVE	2	2	2	2					X			
2	12024192	RACORD EN CRUZ	CROSS FITTING	1	1	1	1								
3	12245966	CONDUCTO CALDERIN-RACORD	BOILER-FITTING PIPE	2	2	2	2								
4	11000083	TUBO GOMA NEGRA D 17x10	BLACK RUBBER PIPE D 17x10	1	1	1	1								
5	11000083	TUBO GOMA NEGRA D 17x10	BLACK RUBBER PIPE D 17x10	1	1	1	1								
6	11000083	TUBO GOMA NEGRA D 17x10	BLACK RUBBER PIPE D 17x10	1	1	1	1								
7	12133010	DOSIFICADOR ABRILLANTADOR	RINSE-AID DISPENSER	1	1	1	1								
8	12132302	SOPORTE TERMOSTATOS	THERMOSTATS SUPPORT	1	1	1	1								
9	12049602	CALDERIN CO-400	BOILER CO-400	1	1	1	1								
10	12110531	ELECTROVALVULA DOBLE	DOUBLE ELECTROVALVE	1	1	1	1					X	01/11/2017		
10	12023794	ELECTROVALVULA DOBLE	DOUBLE ELECTROVALVE	1	1	1	1					X		01/11/2017	
11	12265502	CONDUCTO ABRILLANTADOR	RINSE AID PIPE	1	1	1	1								
12	12010036	ABRAZADERA 12-20	12-20 CLAMP	14	14	14	14								
14	12093403	CONDUCTO EV-ANTIRRETORNO	EV-NON-RETURN PIPE	2	2	2	2								
15	11002150	TUBO EPDM TRENZADO 6x12	EPDM BRAIDED PIPE 6x12	1	1	1	1								
16	12010047	ABRAZADERA 8-14L	8-14L CLAMP	2	2	2	2								

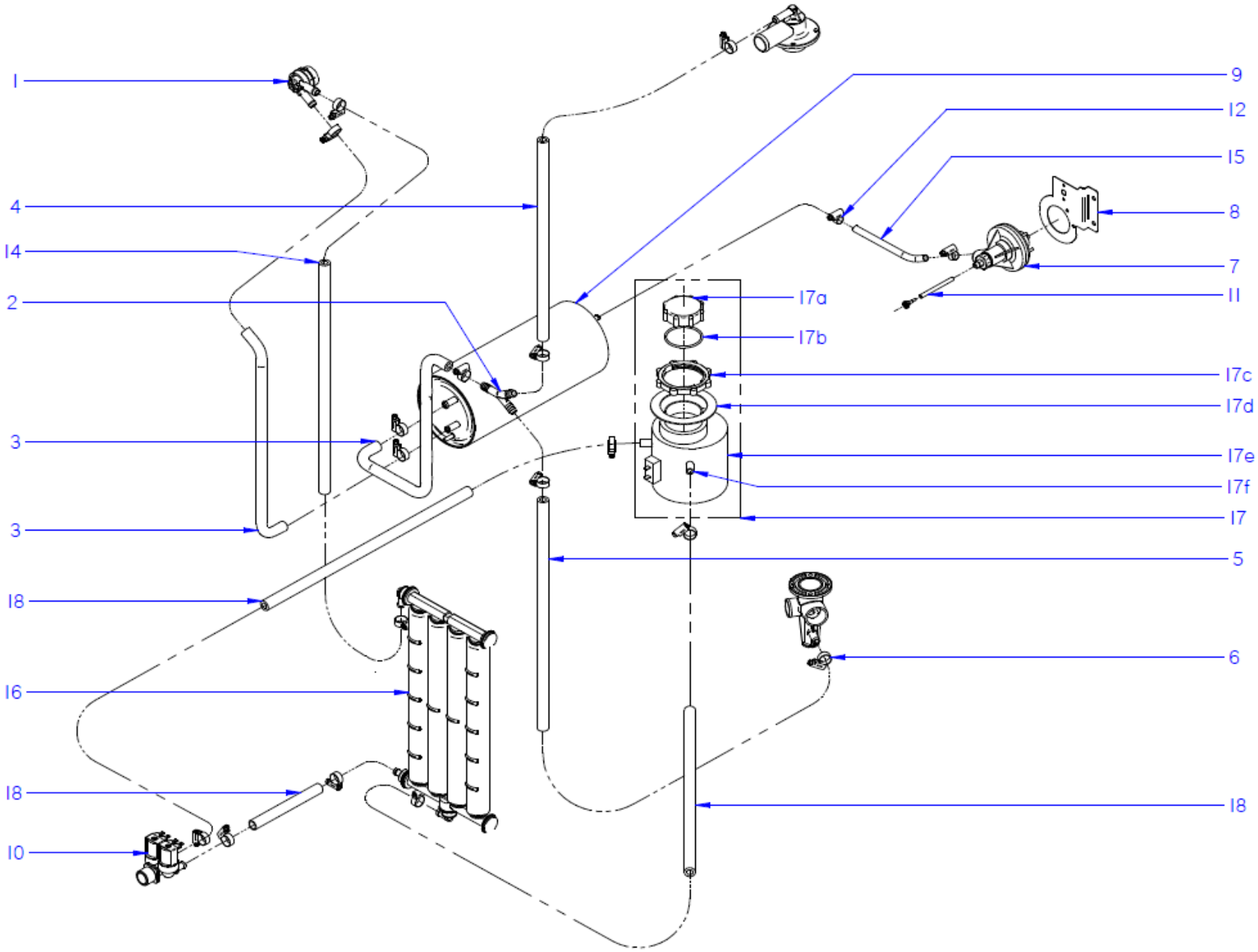

Drawing Nr.	Signature	Date	ACLARADO / RINSE	Sheet
C-3327	Iban R.	sep-20	CO-350/400 SOFT	18

FAGOR

ZONA / ZONE	PARTE FUNCIONAL ACLARADO / FUNCTIONAL RINSE PART		C-3327	FAGOR

ITEM	REFERENCIA REFERENCE	DENOMINACIÓN	DENOMINATION	CO-400 SOFT DD								RECOMMENDED	HASTA / UNTIL	DESDE / SINCE	NOTAS / NOTES
1	12024568	VALVULA ANTIRRETORNO	NON-RETURN VALVE	1								X			
2	12023511	RACORD EN Y	Y FITTING	1											
3	12093402	CONDUCTO CALDERIN-Y CO-400	BOILER -Y PIPE CO-400	2											
4	11000083	TUBO GOMA NEGRA D 17x10	BLACK RUBBER PIPE D 17x10	1											
5	11000083	TUBO GOMA NEGRA D 17x10	BLACK RUBBER PIPE D 17x10	1											
6	12010036	ABRAZADERA 12-20	12-20 CLAMP	16											
7	12045206	DOSIFICADOR ABRILL. AQUA	AQUA RINSE-AID DISPENSER	1											
8	12132302	SOPORTE TERMOSTATOS	THERMOSTATS SUPPORT	1											
9	12049602	CALDERIN CO-400	BOILER CO-400	1											
10	12225592	E.V.DOBLE + REGULADOR 1L	DOUBLE ELECTROV. + 1L REGULATOR	1								X	01/11/2017		
10	12225593	E.V.DOBLE + REGULADOR 1L	DOUBLE ELECTROV. + 1L REGULATOR	1								X		01/11/2017	
11	12265502	CONDUCTO ABRILLANTADOR	RINSE AID PIPE	1											
12	12010047	ABRAZADERA 8-14L	8-14L CLAMP	2											
14	11000083	TUBO GOMA NEGRA D 17x10	BLACK RUBBER PIPE D 17x10	1											
15	11002150	TUBO EPDM TRENZADO 6x12	EPDM BRAIDED PIPE 6x12	1											
16	12024874	DESCALCIFICADOR 4 COLUMNAS	4 COLUMN SOFTENER	1								X			
17	12226075	BOTE DE SALES COMPLETO CO-400	CO-400 FULL SALT CONTAINER	1								X			
17a	12025273	TAPON	COVER	1											
17b	12024031	JUNTA TAPON	COVER O-RING	1											
17c	12025272	TUERCA	NUT	1											
17d	12025267	JUNTA TUERCA	NUT SEAL	1											
17e	12113090	BOTE SALES + SENSOR CO-400	SALT CONTAINER + SENSOR CO-400	1											
17f	12023847	FILTRO	FILTER	1											
18	11000083	TUBO GOMA NEGRA D 17x10	BLACK RUBBER PIPE D 17x10	3											

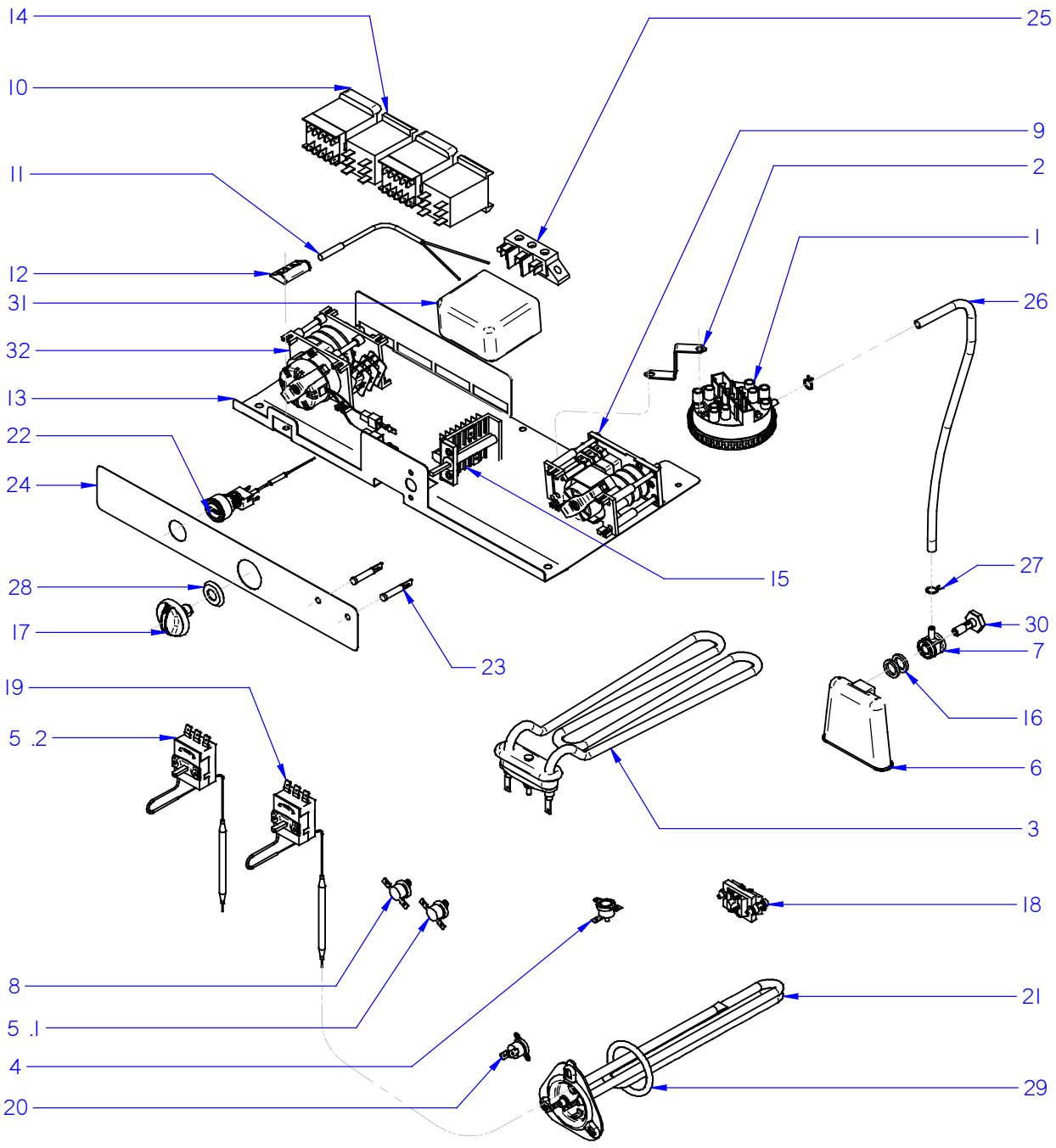

Drawing Nr.	Signature	Date	CONJ. ELÉCTRICO / ELECTRICAL PART	Sheet
C-3328	Iban R.	jun-17	CO-350/400	20

FAGOR

ZONA / ZONE	CONJUNTO ELECTRICO / ELECTRICAL PART		C-3328	FAGOR

ITEM	REFERENCIA REFERENCE	DENOMINACIÓN	DENOMINATION	CO-350	CO-350 B	CO-350 DD	CO-350 B DD	CO-350 COLD	CO-350 COLD B	CO-350 COLD DD	CO-350 COLD B DD	RECOMMENDED	HASTA / UNTIL	DESDE / SINCE	NOTAS / NOTES
1	12023803	PRESOSTATO SIMPLE	SIMPLE PRESSURE SWITCH	1	1	1	1	1	1	1	1	X			
2	12023163	SOPORTE PRESOSTATO	PRESSURE SWITCH SUPPORT	1	1	1	1	1	1	1	1				
3	12090524	RESISTENCIA TANQUE 400 2 KW	TUB RESISTOR 400 2KW	1	1	1	1	1	1	1	1	X			
4	12090518	TERMOSTATO DE SEGURIIDAD 95ºC	SAFETY THERMOSTAT 95ºC	1	1	1	1	1	1	1	1	X			
5.1	12090526	TERMOSTATO 56ºC	THERMOSTAT 56ºC	1	1	1	1	1	1	1	1	X	23/10/2015		
5.2	12161299	TERMOSTATO 60ºC	THERMOSTAT 60°C	1	1	1	1	1	1	1	1	X		23/10/2015	
6	12134442	CAMARA PRESOSTATO	PRESSURE CHAMBER	1	1	1	1	1	1	1	1	X			
7	12024157	RACOR PRESOSTATO	PRESSURE SWITCH FITTING	1	1	1	1	1	1	1	1				
8	12095019	TERMOSTATO 51ºC	THERMOSTAT 51ºC	1	1	1	1	1	1	1	1	X	23/10/2015		
9	12024873	PROGRAMADOR DE CICLO	CYCLE PROGRAMMER	1	1	1	1	1	1	1	1	X			
10	12024011	CONTACTOR 230 V. 50-60 HZ	230 V. 50-60 HZ CONTACTOR	2	2	2	2	2	2	2	2	X			
11	12024477	INTERRUPTOR MAGNETICO	MAGNETIC SWITCH	1	1	1	1	1	1	1	1	X			
12	12024066	AMARRE INTERRUPTOR MAGNETICO	MAGNETIC SWITCH'S SUPPORT	1	1	1	1	1	1	1	1				
13	12049136	SOP. COMPONENTES ELECTRICOS	ELECTRIC COMPONENTS SUPPORT	1	1	1	1	1	1	1	1				
14	12023706	RELE 230V. 16A 50-60 HZ	230V. 16A 50-60 HZ RELAY	2	2	2	2	2	2	2	2	X			
15	12024972	CONMUTADOR 4 POSICIONES	SWITCH FOR FUNCTIONS 4 POSS.	1	1	1	1	1	1	1	1	X			
16	12009873	JUNTA CAMARA PRESOSTATO	PRESSURE CHAMBER SEAL	2	2	2	2	2	2	2	2				
17	12049646	CONJUNTO MANDO CONCEPT	CONCEPT KNOB ASSEMBLED	1	1	1	1	1	1	1	1	X			
18	12024230	RETENEDOR DE CABLE	CABLE RETAINER	1	1	1	1	1	1	1	1				
19	12134992	TERMOSTATO CALDERIN 85ºC	BOILER THERMOSTAT 85°C	1	1	1	1	1	1	1	1	X			
20	12096597	TERMOSTATO DE SEGURIIDAD 110ºC	SAFETY THERMOSTAT 110ºC	1	1	1	1	1	1	1	1	X			
21	12093151	RESISTENCIA CALDERIN 2,4KW	BOILER'S RESISTOR 2,4KW	1	1	1	1	1	1	1	1	X			
22	12165896	PULSADOR 230V AC START	230V AC START PUSHBUTTON	1	1	1	1	1	1	1	1	X			
23	12132355	PILOTO BLANCO	WHITE PILOT	2	2	2	2	2	2	2	2		20/11/2018		
23	12217837	LED 250V BLANCO	250V WHITE LED	2	2	2	2	2	2	2	2			20/11/2018	
24	12093682	EMBELLECEDOR CO-350-400	STICKER CO-350-400	1	1	1	1	_	_	_	_	X	20/11/2018		
24	12217857	EMBELLECEDOR CO-350-400	STICKER CO-350-400	1	1	1	1	_	_	_	_	X		20/11/2018	
24	12049891	EMBELLECEDOR CO-350-400 COLD	STICKER CO-350-400 COLD	_	_	_	_	1	1	1	1	X	20/11/2018		
24	12167650	EMBELLECEDOR CO-350-400 COLD	STICKER CO-350-400 COLD	_	_	_	_	1	1	1	1	X		20/11/2018	
25	12024382	REGLETA 40A 3VIA 5MM	CONNECTION STRIP 40A 3WAY 5MM	1	1	1	1	1	1	1	1				
26	11000066	TUBO GOMA NEGRO D 8*4	BLACK RUBBER PIPE D 8*4	1	1	1	1	1	1	1	1				
27	12023707	BRIDA ELASTICA TUBO	ELASTIC CLAMP FOR PIPES	2	2	2	2	2	2	2	2				
28	12024516	JUNTA CONMUTADOR	FUNCTIONS SWITCH SEAL	1	1	1	1	1	1	1	1				
29	12102062	JUNTA TÓRICA RESIS. TUBULAR EVO	EVO TUBULAR RESISTOR O-RING	1	1	1	1	1	1	1	1	X			
30	12024222	TORNILLO PRESOSTATO	PRESSURE SCREW	1	1	1	1	1	1	1	1				
31	12110686	SOFT START AF	SOFT START AF	1	1	1	1	1	1	1	1				

ZONA / ZONE	CONJUNTO ELECTRICO / ELECTRICAL PART			LÁMINA / DRAWING	C-3328	FAGOR

ITEM	REFERENCIA REFERENCE	DENOMINACIÓN	DENOMINATION	CO-400	CO-400 COLD	CO-400 COLD B	CO-400 COLD DD	CO-400 COLD B DD	CO-400 SOFT DD			RECOMMENDED	HASTA / UNTIL	DESDE / SINCE	NOTAS / NOTES
1	12023803	PRESOSTATO SIMPLE	SIMPLE PRESSURE SWITCH	1	1	1	1	1	1			X			
2	12023163	SOPORTE PRESOSTATO	PRESSURE SWITCH SUPPORT	1	1	1	1	1	1						
3	12090524	RESISTENCIA TANQUE 400 2 KW	TUB RESISTOR 400 2KW	1	1	1	1	1	1			X			
4	12090518	TERMOSTATO DE SEGURIIDAD 95ºC	SAFETY THERMOSTAT 95ºC	1	1	1	1	1	1			X			
5.1	12090526	TERMOSTATO 56ºC	THERMOSTAT 56ºC	1	1	1	1	1	1			X	22/10/2015		
5.2	12161299	TERMOSTATO 60ºC	THERMOSTAT 60°C	1	1	1	1	1	1			X		23/10/2015	
6	12134442	CAMARA PRESOSTATO	PRESSURE CHAMBER	1	1	1	1	1	1			X			
7	12024157	RACOR PRESOSTATO	PRESSURE SWITCH FITTING	1	1	1	1	1	1						
8	12095019	TERMOSTATO 51ºC	THERMOSTAT 51ºC	1	1	1	1	1	1			X	22/10/2015		
9	12024873	PROGRAMADOR DE CICLO	CYCLE PROGRAMMER	1	1	1	1	1	1			X			
10	12024011	CONTACTOR 230 V. 50-60 HZ	230 V. 50-60 HZ CONTACTOR	2	2	2	2	2	2			X			
11	12024477	INTERRUPTOR MAGNETICO	MAGNETIC SWITCH	1	1	1	1	1	1			X			
12	12024066	AMARRE INTERRUPTOR MAGNETICO	MAGNETIC SWITCH'S SUPPORT	1	1	1	1	1	1						
13	12101832	SOP. COMPONENTES ELECTRICOS	ELECTRIC COMPONENTS SUPPORT	1	1	1	1	1	1						
14	12023706	RELE 230V. 16A 50-60 HZ	230V. 16A 50-60 HZ RELAY	2	2	2	2	2	2			X			
15	12024972	CONMUTADOR 4 POSICIONES	SWITCH FOR FUNCTIONS 4 POSS.	1	1	1	1	1	1			X			
16	12009873	JUNTA CAMARA PRESOSTATO	PRESSURE CHAMBER SEAL	2	2	2	2	2	2						
17	12049646	CONJUNTO MANDO CONCEPT	CONCEPT KNOB ASSEMBLED	1	1	1	1	1	1			X			
18	12024230	RETENEDOR DE CABLE	CABLE RETAINER	1	1	1	1	1	1						
19	12134992	TERMOSTATO CALDERIN 85ºC	BOILER THERMOSTAT 85°C	1	1	1	1	1	1			X			
20	12096597	TERMOSTATO DE SEGURIIDAD 110ºC	SAFETY THERMOSTAT 110ºC	1	1	1	1	1	1			X			
21	12093124	RESISTENCIA CALDERIN 2,8KW	BOILER'S RESISTOR 2,8KW	1	1	1	1	1	1			X			
22	12165896	PULSADOR 230V AC START	230V AC START PUSHBUTTON	1	1	1	1	1	1			X			
23	12132355	PILOTO BLANCO	WHITE PILOT	2	2	2	2	2	2				20/11/2018		
23	12217837	LED 250V BLANCO	250V WHITE LED	2	2	2	2	2	2					20/11/2018	
24	12093682	EMBELLECEDOR CO-350-400	STICKER CO-350-400	1	1	_	_	_	_			X	20/11/2018		
24	12217857	EMBELLECEDOR CO-350-400	STICKER CO-350-400	1	1	_	_	_	_			X		20/11/2018	
24	12049891	EMBELLECEDOR CO-350-400 COLD	STICKER CO-350-400 COLD	_	_	1	1	1	_			X	20/11/2018		
24	12167650	EMBELLECEDOR CO-350-400 COLD	STICKER CO-350-400 COLD	_	_	1	1	1	_			X		20/11/2018	
24	12101854	EMBELLECEDOR CO-400 SOFT	STICKER CO-400 SOFT	_	_	_	_	_	1			X	20/11/2018		
24	12167651	EMBELLECEDOR CO-400 SOFT	STICKER CO-400 SOFT	_	_	_	_	_	1			X		20/11/2018	
25	12024382	REGLETA 40A 3VIA 5MM	CONNECTION STRIP 40A 3WAY 5MM	1	1	1	1	1	1						
26	11000066	TUBO GOMA NEGRO D 8*4	BLACK RUBBER PIPE D 8*4	1	1	1	1	1	1						
27	12023707	BRIDA ELASTICA TUBO	ELASTIC CLAMP FOR PIPES	2	2	2	2	2	2						
28	12024516	JUNTA CONMUTADOR	FUNCTIONS SWITCH SEAL	1	1	1	1	1	1						
29	12102062	JUNTA TÓRICA RESIS. TUBULAR EVO	EVO TUBULAR RESISTOR O-RING	1	1	1	1	1	1						
30	12024222	TORNILLO PRESOSTATO	PRESSURE SCREW	1	1	1	1	1	1						
31	12110686	SOFT START AF	SOFT START AF	1	1	1	1	1	1						
32	12024867	PROGRAMADOR REGENERACION	REGENERATION PROGRAMMER	_	_	_	_	_	1						

ZONA / ZONE	VARIOS / VARIOUS	LÁMINA / DRAWING	-	FAGOR

ITEM	REFERENCIA REFERENCE	DENOMINACIÓN	DENOMINATION	CO-350	CO-350 B	CO-350 DD	CO-350 B DD	CO-350 COLD	CO-350 COLD B	CO-350 COLD DD	CO-350 COLD B DD			RECOMMENDED	HASTA / UNTIL	DESDE / SINCE	NOTAS / NOTES
	12023746	CABLEADO ALIMENTACIÓN	POWER CORD	1	1	1	1	1	1	1	1						
	12117503	CABLEADO PORTAMANDOS	CONTROL PANEL WIRING	1	1	1	1	1	1	1	1				20/11/2018		
	12217732	CABLEADO PORTAMANDOS	CONTROL PANEL WIRING	1	1	1	1	1	1	1	1					20/11/2018	
	12024183	CABLEADO TIERRAM.BOMBA	EARTH PUMP WIRING	1	1	1	1	1	1	1	1						
	12101638	INSTALACIÓN ELECTRICA	ELECTRICAL WIRING	1	1	1	1	1	1	1	1				01/11/2017		
	12164865	INSTALACIÓN ELECTRICA	ELECTRICAL WIRING	1	1	1	1	1	1	1	1					01/11/2017	
	12117380	CABLEADO RESIS.+DIODO PARA LED	RESIS.+DIODE FOR LED WIRING	2	2	2	2	2	2	2	2						

ZONA / ZONE	VARIOS / VARIOUS	LÁMINA / DRAWING	-	FAGOR

ITEM	REFERENCIA REFERENCE	DENOMINACIÓN	DENOMINATION	CO-400	CO-400 COLD	CO-400 COLD B	CO-400 COLD DD	CO-400 COLD B DD	CO-400 SOFT DD					RECOMMENDED	HASTA / UNTIL	DESDE / SINCE	NOTAS / NOTES
	12023746	CABLEADO ALIMENTACIÓN	POWER CORD	1	1	1	1	1	1								
	12117503	CABLEADO PORTAMANDOS	CONTROL PANEL WIRING	1	1	1	1	1	1						20/11/2018		
	12217732	CABLEADO PORTAMANDOS	CONTROL PANEL WIRING	1	1	1	1	1	1							20/11/2018	
	12236695	CABLEADO PORTAMANDOS	CONTROL PANEL WIRING	-	-	-	-	-	1							15/04/2019	
	12024183	CABLEADO TIERRA BOMBA	EARTH PUMP WIRING	1	1	1	1	1	1								
	12101638	INSTALACIÓN ELECTRICA	ELECTRICAL WIRING	1	1	1	1	1	1						20/07/2017		
	12114433	INSTALACIÓN ELECTRICA	ELECTRICAL WIRING	-	-	-	-	-	1						20/07/2017		
	12164865	INSTALACIÓN ELECTRICA	ELECTRICAL WIRING	1	1	1	1	1	-							21/07/2017	
	12164868	INSTALACIÓN ELECTRICA	ELECTRICAL WIRING	-	-	-	-	-	1							21/07/2017	
	12117380	CABLEADO RESIS.+DIODO PARA LED	RESIS.+DIODE FOR LED WIRING	2	2	2	2	2	3								

ZONA / ZONE	RECOMENDADOS / RECOMMENDED													FAGOR

ITEM	REFERENCIA REFERENCE	DENOMINACIÓN	DENOMINATION	CO-350	CO-350 B	CO-350 DD	CO-350 B DD	CO-350 COLD	CO-350 COLD B	CO-350 COLD DD	CO-350 COLD B DD		HASTA / UNTIL	DESDE / SINCE	NOTAS / NOTES
4	12024346	CONDENSADOR 10MF	10MF CAPACITOR	1	1	1	1	1	1	1	1				C-3322
24	12023429	BOMBA LAVADO 50/60HZ 260KW	WASHING PUMP 50/60HZ 260KW	1	1	1	1	1	1	1	1				C-3322
6	12024114	MANGUERA DESAGUE	DRAINING PIPE	1	-	1	-	1	-	1	-				C-3323
5	12094265	BOMBA DESAGÜE 1N 50/60Hz 38W	DRAINING PUMP 1N 50/60Hz 38W	-	1	-	1	-	1	-	1				C-3324
1	12024568	VALVULA ANTIRRETORNO	NON-RETURN VALVE	1	1	1	1	2	2	2	2				C-3325
10	12025161	E.V.SIMPLE 220V. 50/60Hz	SIMPLE ELECTROVALVE	1	1	1	1	-	-	-	-				C-3325
10	12023794	ELECTROVALVULA DOBLE	DOUBLE ELECTROVALVE	-	-	-	-	1	1	1	1				C-3326
1	12023803	PRESOSTATO SIMPLE	SIMPLE PRESSURE SWITCH	1	1	1	1	1	1	1	1				C-3328
3	12090524	RESISTENCIA TANQUE 400 2 KW	TUB RESISTOR 400 2KW	1	1	1	1	1	1	1	1				C-3328
4	12090518	TERM. SEG. 261B NC 95ºC	SAFETY THER. 261B 95ºC	1	1	1	1	1	1	1	1				C-3328
5	12161299	TERMOST. CALDERIN 60ºC	BOILER THERMOSTAT 60°C	1	1	1	1	1	1	1	1				C-3328
6	12134442	CAMARA PRESOSTATO	PRESSURE CHAMBER	1	1	1	1	1	1	1	1				C-3328
8	12095019	TERMOSTATO 261 NA 51ºC	THERMOSTAT 261 NA 51ºC	1	1	1	1	1	1	1	1				C-3328
9	12024873	PROGRAMADOR DE CICLO	CYCLE PROGRAMMER	1	1	1	1	1	1	1	1				C-3328
10	12024011	CONTACTOR 230 V. 50-60 HZ	230 V. 50-60 HZ CONTACTOR	2	2	2	2	2	2	2	2				C-3328
11	12024477	INTERRUPTOR MAGNETICO	MAGNETIC SWITCH	1	1	1	1	1	1	1	1				C-3328
14	12023706	RELE 230V. 16A 50-60 HZ	230V. 16A 50-60 HZ RELAY	2	2	2	2	2	2	2	2				C-3328
15	12024972	CONMUTADOR 4 POSICIONES	SWITCH FOR FUNCTIONS 4 POSS.	1	1	1	1	1	1	1	1				C-3328
17	12049646	CONJUNTO MANDO CONCEPT	CONCEPT KNOB ASSEMBLED	1	1	1	1	1	1	1	1				C-3328
19	12134992	TERMOSTAT. CALDERIN 85ºC	BOILER THERMOSTAT 85°C	1	1	1	1	1	1	1	1				C-3328
20	12096597	TERM.SEG. 261B 110ºC FAST 90	SAFETY THER. 261B 110ºC FAST 90	1	1	1	1	1	1	1	1				C-3328
21	12093151	RESISTENCIA CALDERIN 2,4KW	BOILER'S RESISTOR 2,4KW	1	1	1	1	1	1	1	1				C-3328
22	12165896	PULSADOR 230V AC START	230V AC START PUSHBUTTON	1	1	1	1	1	1	1	1				C-3328
24	12217857	EMBELLECEDOR CO-350-400	STICKER CO-350-400	1	1	1	1	-	-	-	-				C-3328
24	12167650	EMBELLECEDOR CO-350-400 COLD	STICKER CO-350-400 COLD	-	-	-	-	1	1	1	1				C-3328

ZONA / ZONE	RECOMENDADOS / RECOMMENDED												FAGOR

ITEM	REFERENCIA REFERENCE	DENOMINACIÓN	DENOMINATION	CO-400	CO-400 COLD	CO-400 COLD DD	CO-400 COLD B	CO-400 COLD B DD	CO-400 SOFT DD				ELIMINADO ELIMINATED	INTRODUCIDO INTRODUCED	NOTAS / NOTES
4	12024346	CONDENSADOR 10MF	10MF CAPACITOR	1	1	1	1	1	1						C-3322
24	12023429	BOMBA LAVADO 50/60HZ 260KW	WASHING PUMP 50/60HZ 260KW	1	1	1	1	1	1						C-3322
6	12024114	MANGUERA DESAGUE	DRAINING PIPE	1	1	1	-	-	1						C-3323
5	12094265	BOMBA DESAGÜE 1N 50/60Hz 38W	DRAINING PUMP 1N 50/60Hz 38W	-	-	-	1	1	-						C-3324
1	12024568	VALVULA ANTIRRETORNO	NON-RETURN VALVE	1	2	2	2	2	1						C-3325
10	12025161	E.V.SIMPLE 220V. 50/60Hz	SIMPLE ELECTROVALVE	1	-	-	-	-	-						C-3325
10	12023794	ELECTROVALVULA DOBLE	DOUBLE ELECTROVALVE	-	1	1	1	1	1						C-3326
7	12045206	DOSIFICADOR ABRILL. AQUA	AQUA RINSE-AID DISPENSER	-	-	-	-	-	1						C-3327
10	12225593	E.V.DOBLE + REGULADOR 1L	DOUBLE ELECTROV. + 1L REGULATOR	-	-	-	-	-	1						C-3327
16	12024874	DESCALCIFICADOR 4 COLUMNAS	4 COLUMN SOFTENER	-	-	-	-	-	1						C-3327
17	12226075	BOTE DE SALES COMPLETO CO-400	CO-400 FULL SALT CONTAINER	-	-	-	-	-	1						C-3327
1	12023803	PRESOSTATO SIMPLE	SIMPLE PRESSURE SWITCH	1	1	1	1	1	1						C-3328
3	12090524	RESISTENCIA TANQUE 400 2 KW	TUB RESISTOR 400 2KW	1	1	1	1	1	1						C-3328
4	12090518	TERM. SEG. 261B NC 95ºC	SAFETY THER. 261B 95ºC	1	1	1	1	1	1						C-3328
5	12090526	TERM. SEG. 261 NC 56ºC	SAFETY THER. 261 56ºC	1	1	1	1	1	1						C-3328
5	12161299	TERMOST. CALDERIN 60ºC	BOILER THERMOSTAT 60°C	1	1	1	1	1	1						C-3328
6	12134442	CAMARA PRESOSTATO	PRESSURE CHAMBER	1	1	1	1	1	1						C-3328
8	12095019	TERMOSTATO 261 NA 51ºC	THERMOSTAT 261 NA 51ºC	1	1	1	1	1	1						C-3328
9	12024873	PROGRAMADOR DE CICLO	CYCLE PROGRAMMER	1	1	1	1	1	1						C-3328
10	12024011	CONTACTOR 230 V. 50-60 HZ	230 V. 50-60 HZ CONTACTOR	2	2	2	2	2	2						C-3328
11	12024477	INTERRUPTOR MAGNETICO	MAGNETIC SWITCH	1	1	1	1	1	1						C-3328
14	12023706	RELE 230V. 16A 50-60 HZ	230V. 16A 50-60 HZ RELAY	2	2	2	2	2	2						C-3328
15	12024972	CONMUTADOR 4 POSICIONES	SWITCH FOR FUNCTIONS 4 POSS.	1	1	1	1	1	1						C-3328
17	12049646	CONJUNTO MANDO CONCEPT	CONCEPT KNOB ASSEMBLED	1	1	1	1	1	1						C-3328
19	12134992	TERMOSTAT. CALDERIN 85ºC	BOILER THERMOSTAT 85°C	1	1	1	1	1	1						C-3328
20	12096597	TERM.SEG. 261B 110ºC FAST 90	SAFETY THER. 261B 110ºC FAST 90	1	1	1	1	1	1						C-3328
21	12093124	RESISTENCIA CALDERIN 2,8KW	BOILER'S RESISTOR 2,8KW	1	1	1	1	1	1						C-3328
22	12165896	PULSADOR 230V AC START	230V AC START PUSHBUTTON	1	1	1	1	1	1						C-3328
24	12217857	EMBELLECEDOR CO-350-400	STICKER CO-350-400	1	-	-	-	-	-						C-3328
24	12167650	EMBELLECEDOR CO-350-400 COLD	STICKER CO-350-400 COLD	-	1	1	1	1	-						C-3328
24	12167651	EMBELLECEDOR CO-400 SOFT	STICKER CO-400 SOFT	-	-	-	-	-	1						C-3328

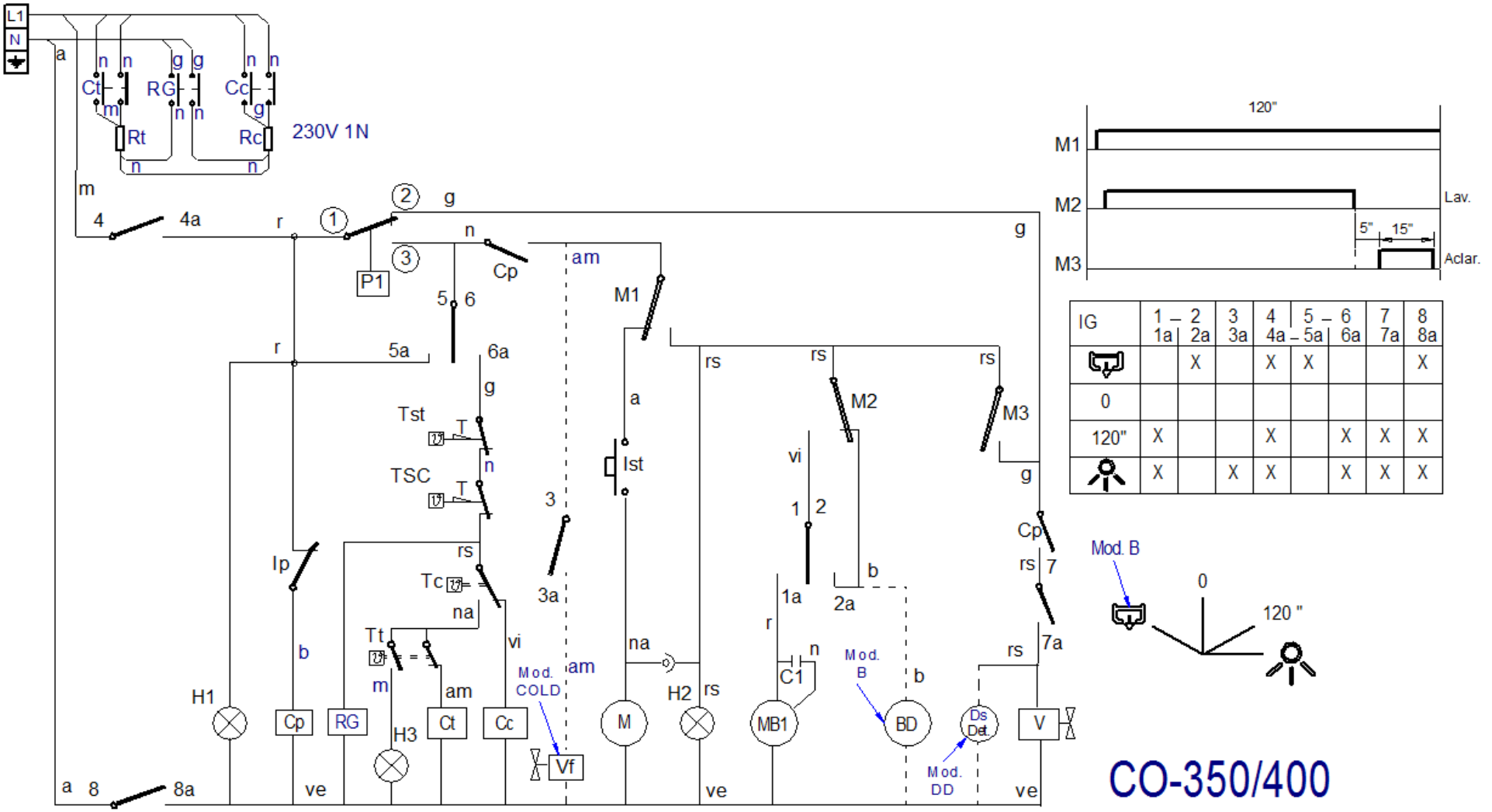

IG	1 – 2 1a 2a	3 3a	4 4a	5 – 6 5a 6a	7 7a	8 8a
	X		X	X		X
0						
120"	X		X		X	X	X
	X	X	X		X	X	X

CO-350/400

Drawing Nr.	Signature	Date	ESQUEMA ELÉC. / WIRING DIAGRAM	Sheet
-	Iban R.	jun-17	CO-350/400	26

FAGOR

	ESPAÑOL	ENGLISH	FRANÇAIS	DUTSCH	ITALIANO	PORTUGUES
⏚	Tierra de protección	Grounding	Mise à terre	toma de tierra? Erdung	Messa a terra	
P	Puente de Conexión	Terminal block bridge	Pontage pour bloc de jonction	Verbindungsblockanschluss	Ponte di connessione	
BA	Bomba Aclarado	Rinse pump	Pompe de rinçage	Spülmittel dossierpumpe	Pompa di risciacquo	
BD	Bomba desagüe	Drain pump	Pompe de vidange	Abflubpumpe	Pompa scarico	
C, C1, C2	Condensador	Capacitor	Condensateur	kondensator	Condensatore	
CMB	Contactor bomba lavado	Wash pump contactor	Contacteur pompe de lavage	Türelais	Contattore pompa lavaggio	
Cc	Contactor calentamiento calderín	Boiler heating contactor	Contacteur chauffage surchauffeur	Kontaktschütz Waschpumpe	Contattore riscaldamento boiler	
Ct	Contactor calentamiento tanque	Tank heating contactor	Contacteur chauffage cuve	Kontaktschütz Boilerheizung	Contattore riscaldamento serbatorio	
CP	Relé puerta	Door relay	Relais de porte	Kontaktschütz Heizung tank	Rele' porta	
Ds. Abr	Dosificador Abrillantador	Dispenser	Distributeur	Klarspülmittel dossierpumpe	Dosatore brillantante	
Ds. Det.	Dosificador Detergente	Detergent dispenser	Distributeur de détergent	Dosierer Spülmittel	Dosatore detergente	
F	Fusible	Fuse	Fusible	Fuse	Fusibile	
H1	Lampara encendido	Operation light	Voyant funcionement	Betriebsanzeigelampe	Spia accensione	
H2, H5	Lampara de marcha	Start light	Voyant demarrage	Startanzeigelampe	Spia avvio	
H3	Lampara maquina preparada	Light machine ready	Voyant machine prêt	Betriebsbereitschaftsanzeigelampe	Pilota macchina preparata	
H4	Lampara falta Sal	Lamp salt missing	Lampe absence sel	Lampe Mangel Salz	Spia sale mancante	
HRS	Sistema recuperador energia	Heat Recovery System	Système de récupération de chaleur	System für Hitze-Rückgewinnung	Sistema con recupero di calore	
IG	Interruptor general	Main switch	Interrupteur général	Hauptschalter	Interruttore generale	
IP	Micro puerta	Door microswitch	Micro porte	Mikroschalter Tür	Micro porta	
Ist	Pulsador marcha	push button start	bouton de démarrage	Schalter (Ein)	Pulsante Inizio	
L1 L2 L3	Fases Conexión Eléctrica	Power Supply Phases	Phases de alimentation	Stromanschlussfase	Fasi di alimentazione	
MB1, MB2	Bomba lavado	Wash Pump	Pompe de lavage	Waschpumpe	Pompa lavaggio	
M	Motor Programador lavado	Wash timer Motor	Programmeur Moteur lavage	Motor Programmiervorrichtung	Motore programmatore	
Mav.R	Motor Avance rapido Prg. Lav	Fast Forward Motor Prg. Wash	Moteur Avance rapide Prg. Lav	Motor Programmiervorrich.Betrieb	Motore programmatore avanzamento rapido	
M1, 2, 3, 4, 5	Micros Programador Lavado	Wash Programmer switch	laver micro-programmeur	Motor Programmiervorrich.Spülen	Micro programmatore di lavaggio	
M20, 21, 22, 23	Programador Regeneracion	Regeneration Timer	Programmeur régénération	Regenerierungsprogramm	Timer di regenerazione	
P	Puente	Electric bridge	Pont électrique	Elektrischesteg	Ponte elettrico	
P1	Presostato Tanque	Tank Pressure switch	Pressostat de cuve	Tank Druckwächter	Pressostato serbatorio	
P2	Presostato Bomba desagüe	Drain pump Pressure switch	Pressostat de Pompe de vidange	Abflubpumpe Druckwächter	Pressostato pompa scarico	
P3	Presostato calderin	Boiler Pressure switch	Pressostat de surchauffeur	Boiler Druckwächter	Pressostato boiler	
PRG	Programador Electronico	Electric progammer	Programmateur électronique	Elektronischer Programmierer	Programmatore elettronico	
PRG P2	Puente Soft Start	Soft Start Jumper	Soft Start Cavalier	Soft Start Brücke	Ponte Soft Start	
Rc	Resistencia calderín	Boiler heating element	Resistance surchauffeur	Heizwiderstand Boiler	Resistenza boiler	
RG	Relé General	Main Relay	Relais principal	StromversogungsanschluB Gener.	Rele' generale	
RST	Rele Marcha	Start up relay		Relais	Rele' inizio	
Rt	Resistencia tanque	Tank heating element	Resistance cuve	Heizwiderstand tank	Resistenza serbatorio	
SC	Sonda Temperatura Calderin	Boiler temperature sensor	Surchauffeur capteur de température	Temperatursensor Boiler	Boiler sonda temperatura	
ST	Sonda Temperatura tanque	Tank temperature sensor	Cuve capteur de température	Temperatursensor Tank	Serbatorio sonda temperatura	
TC	Termostato calderin	Boiler thermostat	Thermostat surchauffeur	Thermostat kessel	Termostato boiler	
Tmp	Temporizador	Timer	Minuteur	Timer	Timer	
TRF	Transformador	Transformer	Transformateur	Transformator	Transformatore	
TSC	Termostato Limitador calderin	Boiler Hi-limit thermostat	Thermostat Limiteur surchauffeur	Begrenzer Boiler	Limitatore boiler	
TST	Termostato Limitador tanque	Tank Hi-limit thermostat	Thermostat Limiteur de cuve	Begrenzer tank	Limitatore serbatorio	
TT	Termostato tanque	Tank thermostat	Thermostat de cuve	Thermostat tank	Temostato serbatorio	
V	Electroválvula llenado	Water solenoid valve	Electrovanne d'eau	Elektroventil Füllen und Spülen	Elettroval.riempimento e risciacquo	
Vf	Electroválvula agua Fria	Water solenoid valve	Electrovanne d'eau	Elektroventil Füllen und Spülen	Elettroval.riempimento e risciacquo	
VR1, VR2,VR3,BR	Electrovalvulas Regeneracion	Regeneration solenoid valve	vanne de régénération	Regenerierventil	Valvola di rigenerazione	
	COLOR	***COLOUR***	***COULEURS***	***FARBEN***	***COLORE***	
a = BLU	Azul	Blue	Bleu	Blau	Blu	
am = YEL	Amarillo	Yellow	Jaune	Gelb	Giallo	
am/ve = YEL/GRN	Amarillo/Verde	Yellow / green	Jaune / vert	Gelb/ grün	Giallo/ verde	
b = WHT	Blanco	White	Blanc	WeiB	Bianco	
g = GRY	Gris	Grey	Gris	Grau	Grigio	
m = BRN	Marron	Brown	Marron	Braun	Marrone	
n = BLK	Negro	Black	Noir	Schwarz	Nero	
na = ORG	Naranja	Orange	Orange	Orange	Arancio	
r = RED	Rojo	Red	Rouge	Rot	Rosso	
rs = PNK	Rosa	Pink	Rose	Rosa	Rosa	
ve = GRN	Verde	Green	Vert	Grün	Verde	
vi = PRP	Violeta	Purple	Pourpre	Violett	Viola	
			12103338			**12103338**

Drawing Nr.	Signature	Date	LEYENDA / KEY	Sheet
-	Iban R.	jun-17	CO-350/400	27

FAGOR

CO-350_400

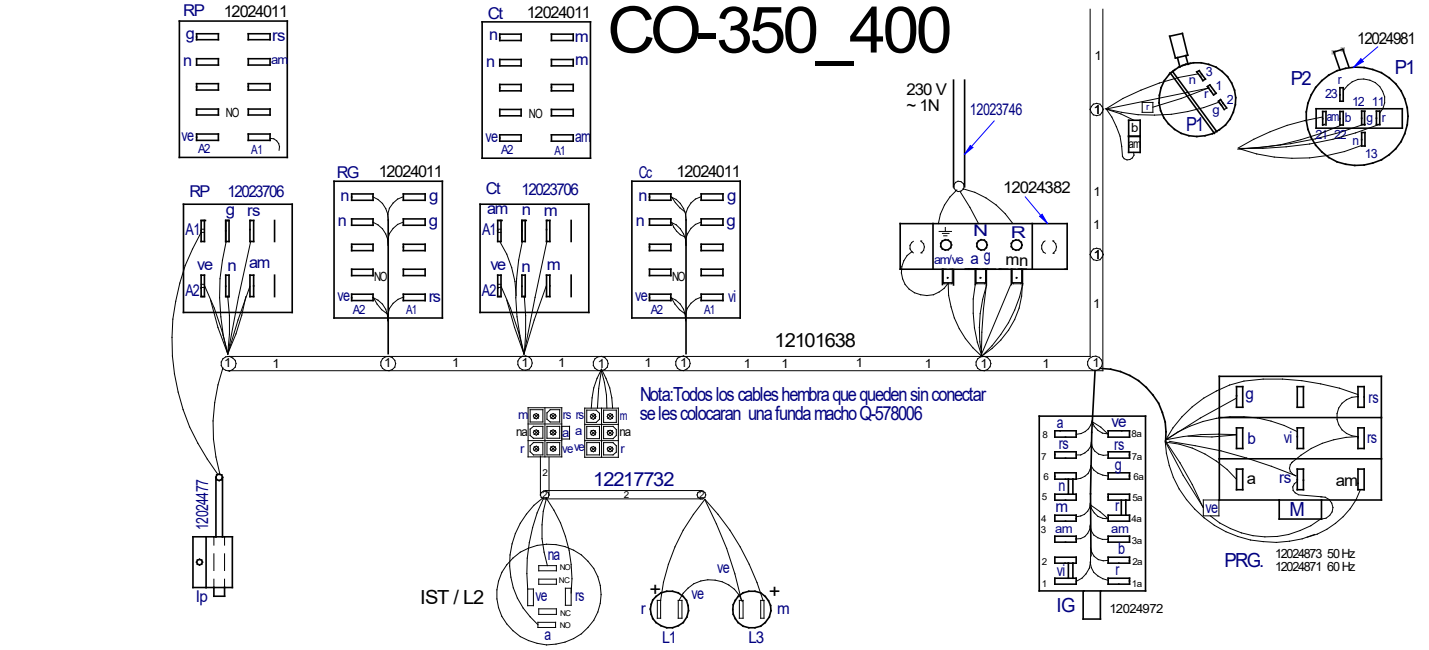

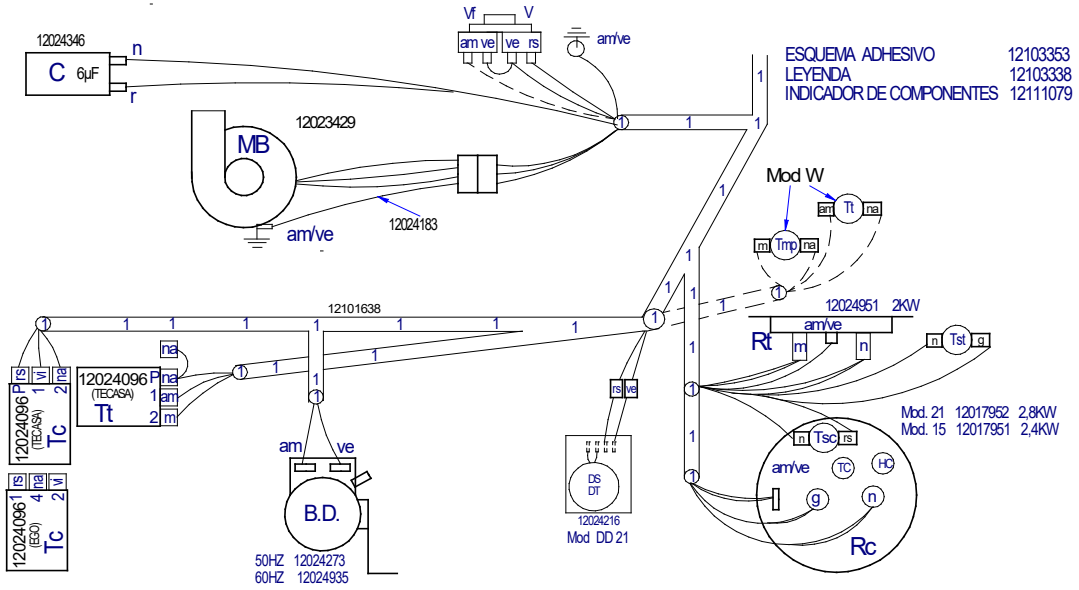

Drawing Nr.	Signature	Date	ANO DE MONTAJE / INSTALLATION DIAGR	Sheet
-	Iban R.	jun-17	CO-350_400	28

FAGOR

CO 400 SOFT

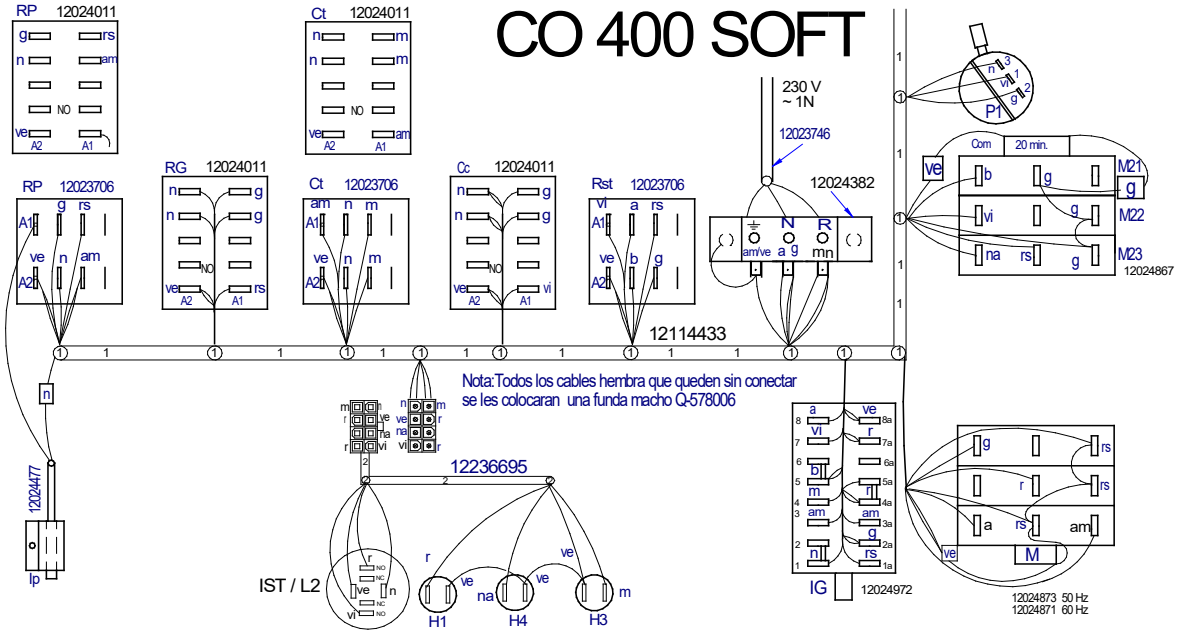

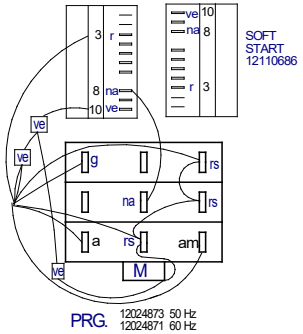

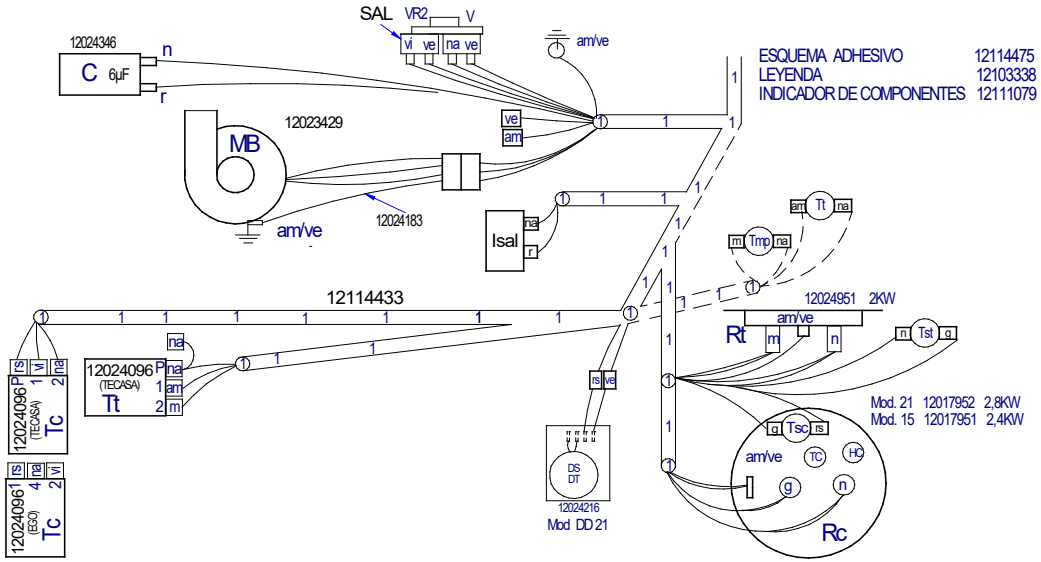

Drawing Nr.	Signature	Date	ANO DE MONTAJE / INSTALLATION DIAGR	Sheet
-	Iban R.	jun-17	CO-400 SOFT	29

FAGOR